Mississippi Department of Environmental Quality
Office of Pollution Control

I-sys 2000 Master Site Detail Report

Site Name: Hercules Inc

PHYSICAL ADDRESS	
LINE 1:	613 West 7th Street
LINE 2:	
LINE 3:	
MUNICIPALITY:	Hattiesburg
STATE CODE:	MS
ZIP CODE:	39401-

MAILING ADDRESS	
LINE 1:	613 West 7th Street
LINE 2:	
LINE 3:	
MUNICIPALITY:	Hattiesburg
STATE CODE:	MS
ZIP CODE:	39401-

OTHER INFORMATION	
MASTER ID:	002022
COUNTY:	Forrest
REGION	SRO
SIC 1:	2822
AIR TYPE:	TITLE V
HW TYPE:	LARGE QUANTITY
SOLID TYPE:	
WATER TYPE:	INDUSTRIAL
BRANCH:	Chemical
ECED CONTACT:	Yassin, Mohammad
BASIN:	

AIR PROGRAMS	☑ SIP	☐ PSD	☐ NSPS	☐ NESHAPS	☑ MACT

Mississippi Department of Environmental Quality
Office of Pollution Control

Pemits

PROGRAM	PERMIT TYPE	PERMIT #	MDEQ PERMIT CONTACT	ACTIVE
HAZ. WASTE	EPA ID	MSD008182081		NO
AIR	TITLE V	080000001	Ketchum, Brian	YES
AIR	SOP	080000001	Ketchum, Brian	NO
WATER	NPDES - MAJOR	MS0001830	Cook, Charles	NO
WATER	NPDES - MAJOR	MS0001830	Cook, Charles	NO
WATER	NPDES - MAJOR	MS0001830	Beasley, Jerry	YES
WATER	PRE-TREATMENT	MSP091286	Tomkins, Tracy	YES
GENERAL	SARA TITLE III	MSR110153	Lavallee, Louis	YES
AIR	TITLE V	0800-00001	Glenn, Montie	NO

Compliance Actions

MEDIA	ACTIVITY TYPE	SCHEDULED	COMPLETED	INSPECTED B
WATER	CEI - NA	3/17/99	3/17/99	Yassin, Mohammad
WATER	CMI - PRETREATMENT	11/1/99		Sharp, Loyd
WATER	CMI - NPDES	4/1/00		Sharp, Loyd
WATER	CMI - NPDES	11/1/99		Sharp, Loyd
WATER	CEI - NA	9/30/00		Yassin, Mohammad
HAZ WASTE	Compliance Evaluation Inspection	9/30/00		Yassin, Mohammad
AIR	State Compliance Inspection	9/30/00		Yassin, Mohammad
HAZ WASTE	Compliance Evaluation Inspection	6/30/99	6/30/99	Yassin, Mohammad
AIR	State Compliance Inspection	6/29/99	6/29/99	Yassin, Mohammad
WATER	CEI - NA	6/30/99	6/30/99	Yassin, Mohammad

HERCULES

Hercules Incorporated
West 7th Street
P.O. Box 1937
Hattiesburg, MS 39401
(601) 545-3450

December 11, 1986

CERTIFIED MAIL - RETURN RECEIPT REQUESTED

Mr. Henry T. Hudson, Chief
Preparedness and Planning Unit
Emergency Response and Control Section
Waste Management Division
U.S. Environmental Protection Agency
345 Courtland Street, N.E.
Atlanta, Georgia 30365

Re: Release Prevention Questionnaire

Dear Mr. Hudson

Please find the enclosed release prevention questionnaire responses as requested in Mr. Jack E. Raven's November 17, 1986 letter.

If I can answer any questions or provide additional information please call me.

Very truly yours,

Charles S. Jordan
Environmental Supervisor

CSJ:sj
0768C

cc: Colonel Charlie Blalock, Executive Director
Mississippi Department of Natural Resources
P. O. Box 20305
Jackson, MS 39209

D. W. Stitz - HO/6240 SW
D. J. Keilman - HO/5140 NW
G. R. Yandle
D. T. Smith

CSJ:sj
0768C

Enclosures

RECEIVED
DEC 15 1986
Department of Natural Resources

U.S. ENVIRONMENTAL PROTECTION AGENCY
RELEASE PREVENTION QUESTIONNAIRE

INITIAL REPORT

SECTION 1. FACILITY PROFILE

1. FACILITY NAME: HERCULES INC
HATTIESBURG PLANT

2. FACILITY ADDRESS: WEST 7th STREET
Street
HATTIESBURG
City
MS.
State
39401
Zip Code

3. NAME OF OWNER: HERCULES INC.

4. ADDRESS OF OWNER: HERCULES PLAZA
Street
WILMINGTON
City
DE
State
19894
Zip Code

5. RESPONDENT: CHARLES JORDAN
Name
ENVIRONMENTAL SUPERVISOR
Title
WEST 7th STREET
Street
HATTIESBURG
City
MS.
State
39401
Zip Code
(601) 545 3450 360
Telephone

6. Please indicate the year facility operations began.

[1] [9] [2] [4]

7. Identify the four-digit Standard Industrial Classification (SIC) that best describes your facility operations and the primary product or service of this facility.

a. SIC code [2] [8] [6] [1]
b. Primary product or service: GUM AND WOOD CHEMICALS

8a. Check the item below that best describes the status of facility operations at the time of release.

a. [X] In operation
b. [ ] Temporarily inactive
c. [ ] Permanently closed

8b. Check the item below that best describes the current status of facility operations.

a. [X] In operation
b. [ ] Temporarily inactive
c. [ ] Permanently closed

If Item a is marked, go to Section II Hazardous Substance Release Profile. If Item b or c is marked, answer Question 8.c. below.

8c. Is the shut down of operations at your facility related to the accidental release of hazardous substances?

[ ] Yes
[ ] No

SECTION II. HAZARDOUS SUBSTANCE RELEASE PROFILE

The following section asks several questions concerning the accidental release of hazardous substances. If exact responses cannot be provided, please provide estimates using your best professional judgment.

9. Indicate the date release occurred.

[0] [5] - [1] [9] - [8] [6]
(month) (day) (year)

10. Indicate the time of day release occurred.

[0] [8] : [0] [0]
[X] A.M.
[ ] P.M.

11. Indicate date release ceased.

[0] [5] - [1] [9] - [8] [6]
(month) (day) (year)

12. Indicate time of day release ceased.

[0] [8]: [0] [5]
[X] A.M.
[ ] P.M.

13. Were federal authorities notified?

[X] Yes [ ] No

a. If yes, identify all federal authorities notified regarding the release.

(If more than one, please attach list on separate page)

NATIONAL RESPONSE CENTER
(Name)

WASHINGTON
(City)

D.C.
(State)

( ) 1-800-424-8802
(Telephone)

b. Indicate the date and time of day federal authorities were notified.

[0] [5] - [1] [9] - [8] [6] (Date)
(month) (day) (year)

[1] [1] : [2] [2] (Time)
[X] A.M.
[ ] P.M.

14. Were state authorities notified?

[X] Yes [ ] No

a. If yes, identify all state authorities notified concerning the release.
(If more than one, please attach list on separate page)

BUREAU OF POLLUTION CONTROL
(Name)

JACKSON
(City)

MS.
(State)

(601) 961-5171
(Telephone)

b. Indicate the date and time of day state authorities were notified.

[0] [5] - [1] [9] - [8] [6] (Date)
(month) (day) (year)

[1] [1] : [4] [4] (Time)
[X] A.M.
[ ] P.M.

15. Were local authorities notified?

[ ] Yes [X] No

a. If yes, identify all local authorities notified concerning the release. (If more than one, please attach list on separate page)

_____
(Name)

_____
(City)

_____
(State)

( )
_____
(Telephone)

b. Indicate the date and time of day local authorities were notified.

[ ] [ ] - [ ] [ ] - [ ] [ ] (Date)
(month) (day) (year)

[ ] [ ] : [ ] [ ] [ ] [ ] (Time)
[ ] A.M.
[ ] P.M.

16. Was the general public notified?

[ ] Yes [X] No

a. If yes, indicate the person that notified the general public of release.
(If more than one, please attach list on separate page)

_____
(Name)

_____
(Title)

_____
(Company or Government Office)

( )
_____
(Telephone)

b. Indicate the date and time of day the general public was notified.

[ ] [ ] - [ ] [ ] - [ ] [ ] (Date)
(month) (day) (year)

[ ] [ ] : [ ] [ ] (Time)
[ ] A.M.
[ ] P.M.

17. Were members of the general public evacuated?

[ ] Yes [X] No

a. If yes, please indicate number evacuated.

[ ] [ ] [ ] [ ] [ ] [ ]

b. Please indicate date and time of day evacuation began.

[ ] [ ] - [ ] [ ] - [ ] [ ] (Date)
(month) (day) (year)

[ ] [ ] : [ ] [ ] (Time)
[ ] A.M.
[ ] P.M.

18. To the best of your ability, indicate the weather conditions at the time of release for each item below. *(est.)*

a. Wind Speed (miles per hour) [0] [0] [5]

b. Wind Direction [S] [W]

c. Humidity (percent) [2] [0]

d. Temperature (Fahrenheit) [0] [9] [0]

e. Precipitation? [ ] Yes [X] No

19. Please check the one item below that best describes the location of the release within your facility.

(please check one item only)

[ ] Process vessel
[ ] Storage vessel
[ ] Valves
[X] Piping
[ ] Unknown
[ ] Other (please describe)

_____
_____
_____
_____

20. Please check the one item below that best describes the operational condition of releasing equipment at the time of the release.

(please check one item only)

[ ] Process startup
[ ] Process shutdown
[ ] Loading
[X] Unloading
[ ] Batch operation
[ ] Maintenance
[ ] Continuing operations
[ ] Unknown
[ ] Other (please describe)

_____
_____
_____
_____

21. Please check the one item below that best describes the primary cause of the release event.

[ ] Equipment failure
[ ] Operator error
[ ] Bypass condition
[ ] Upset condition
[ ] Fire
[ ] Unknown
[X] Other (Please describe)

(please check one item only)

PROCEDURE CALLS FOR PURGING E.O. TRANSFER LINE WITH NITROGEN PRIOR TO OPENING. LINE WAS NOT COMPLETELY FREE OF E.O. WHEN OPENED.

22. Please check any items below that describe additional causes of the release event.

[ ] Equipment failure
[ ] Operator error
[ ] Bypass condition
[ ] Upset condition
[ ] Fire
[ ] Unknown
[ ] Other (Please describe)

(check as many items as apply)

23. Check the items below that describe the end effects of the release event.

[X] Spill
[X] Vapor release
[ ] Explosion
[ ] Fire
[ ] Other (Please describe)

(check as many items as apply)

24.a. Identify in the table below the name of each hazardous substance released, the quantity released, and the concentration and physical state at the time of release.

	NAME	QUANTITY	UNIT	PHYSICAL STATE	CONCENTRATION
1.	ETHYLENE OXIDE	3.5	lbs.	LIQUID	100 %
2.					
3.					
4.					

b. Please describe your methods or source of information for your responses in Question 24.a.

INVESTIGATION WITH AREA PERSONNEL. THE AMOUNT OR QUANTITY WAS ESTIMATED AT APPROXIMATELY 3 OR 4 lbs (3.5 lb AVG)

25.a. In the table below, please estimate the quantity of substances listed in Question 24.a released to each media. Be sure to specify the measurement unit.

NAME	MEDIA	QUANTITY	UNIT
1. ETHYLENE OXIDE	Air	3.5	lbs
	Surface Water		
	Land		
	Ground Water		
2. _____	Air		
	Surface Water		
	Land		
	Ground Water		
3. _____	Air		
	Surface Water		
	Land		
	Ground Water		
4. _____	Air		
	Surface Water		
	Land		
	Ground Water		

b. Please describe your methods or source of information for your responses in Question 25.a.

THE QUANTITY RELEASED QUICKLY EVAPORATED, THEREFORE IT WAS ASSUMED THAT THE QUANTITY REPORTED IN 24.a. WAS RELEASED TO THE AIR.

26.a. Did any substances identified in Questions 24 and 25, migrate beyond the legal boundaries of your facility (for example, a vapor release was carried by prevailing wind beyond the fence line of your facility)?

[X] Yes (If yes, please answer Question 26.b)
[ ] No (If no, skip Question 26.b and answer Question 27)

b. In the table below specify the quantities of substances that migrated past your facility boundaries.

NAME	MEDIA	QUANTITY	UNIT
1. ETHYLENE OXIDE	Air	3.5	lbs
	Surface Water		
	Land		
	Ground Water		
2. _____	Air		
	Surface Water		
	Land		
	Ground Water		
3. _____	Air		
	Surface Water		
	Land		
	Ground Water		
4. _____	Air		
	Surface Water		
	Land		
	Ground Water		

c. Please describe your methods or source of information for your responses in Question 26.b.

SINCE THE AMOUNT RELEASED IN 24.a. QUICKLY EVAPORATED INTO THE AIR AS REPORTED IN 25.a., IT WAS ASSUMED THAT THE QUANTITY REPORTED IN 25.a. EVENTUALLY MIGRATED PAST THE FACILITY BOUNDARIES.

27. Did injuries occur among facility employees as a result of the event?

[ ] Yes
[X] No
[ ] Don't know

a. If yes, please indicate number of injuries.

[ ] [ ] [ ] [ ] [ ] [ ]

[ ] Number of injuries unknown

28. Did injuries occur among the general public as a result of the event?

[ ] Yes
[X] No
[ ] Don't know

a. If yes, please indicate number of injuries.

[ ] [ ] [ ] [ ] [ ] [ ]

[ ] Number of injuries unknown

29. Did deaths occur among facility employees as a result of the event?

[ ] Yes
[X] No
[ ] Don't know

a. If yes, please indicate number of deaths.

[ ] [ ] [ ] [ ] [ ] [ ]

[ ] Number of deaths unknown

30. Did deaths occur among the general public as a result of the event?

[ ] Yes
[X] No
[ ] Don't Know

a. If yes, please indicate number of deaths.

[ ] [ ] [ ] [ ] [ ] [ ]

[ ] Number of deaths unknown

SECTION III. CLEANUP AND PREVENTION PROFILE

31. Did your facility undertake cleanup of the release?

[ ] Yes (If yes, please answer Question 32)
[X] No (If no, please answer Question 33)
SMALL RELEASE QUICKLY EVAPORATED BEFORE REMEDIAL ACTION COULD BE TAKEN.

32. Has cleanup of the release been completed?

[ ] Yes (If yes, please answer Questions 32.a and 32.b)
[ ] No (If no, please answer Questions 32.a and 32.c)

a. Please supply the name and address of the party responsible for cleanup.

_____
(Name)

_____
(Title)

_____
(Address)

_____
(City, State)

( )
_____
(Telephone)

b. Indicate the date cleanup activity ceased.

[ ] [ ] - [ ] [ ] - [ ] [ ]
(month) (day) (year)

c. Please indicate the approximate date completion of cleanup activity is expected.

[ ] [ ] - [ ] [ ] - [ ] [ ]
(month) (day) (year)

33. As simply as possible, describe release prevention practices and policies (backup systems and containment system) utilized at the facility when the release occurred.

PRIOR TO DISCONNECTING E.O. TRANSFER LINE, THE LINE IS PURGED WITH NITROGEN TO REMOVE E.O.

34. Please indicate which of the prevention practices and policies listed in Question 33, if any, were ineffective in preventing the release from reaching the environment.

LINE WAS NOT COMPLETELY PURGED PRIOR TO OPENING.

35. Describe equipment repairs and/or replacements (management practices, operational changes, etc.) made as a result of the release.

REVIEW PURGE PROCEDURES WITH OPERATORS AND EMPHASIZE THE IMPORTANCE OF LINE PURGING.

37. What additional preventative measure(s) will be taken to minimize the possibility of recurrence?

REVIEW PURGE PROCEDURES ON REGULAR BASIS

CERTIFICATION

I hereby certify that I am the Plant Manager, official in charge of environmental matters, or a corporate officer of

HERCULES INC.
Name of Facility or Company

Located at WEST 7th STREET, HATTIESBURG, MS.
Address, City, State

and that I am familiar with the responses concerning the release of hazardous substances occuring on 5-19-86
Date of Release

which are contained in this Release Prevention Questionnaire. I understand that there may be criminal penalties under the Resource Conservation and Recovery Act for knowingly omitting material information or making any false material statement or representation about the releases at my facility or company. I further certify under penalty of perjury that the foregoing responses are true and correct to the best of my knowledge.

This 12th day of DEC., 1986.

Name: G. R. YANDLE

Title: PLANT MANAGER

Signature: G R Yandle

Witness: C S Jordan

[NOTE: A separate certification must accompany each questionnaire.]

U.S. ENVIRONMENTAL PROTECTION AGENCY
RELEASE PREVENTION QUESTIONNAIRE

INITIAL REPORT

SECTION 1. FACILITY PROFILE

1. FACILITY NAME: HERCULES INC
HATTIESBURG PLANT

2. FACILITY ADDRESS: WEST 7th STREET
Street
HATTIESBURG
City
MS.
State
39401
Zip Code

3. NAME OF OWNER: HERCULES INC.

4. ADDRESS OF OWNER: HERCULES PLAZA
Street
WILMINGTON
City
DE
State
19894
Zip Code

5. RESPONDENT: CHARLES JORDAN
Name
ENVIRONMENTAL SUPERVISOR
Title
WEST 7th STREET
Street
HATTIESBURG
City
MS.
State
39401
Zip Code
601 545 3450 360
Telephone

6. Please indicate the year facility operations began.

[1] [9] [2] [4]

7. Identify the four-digit Standard Industrial Classification (SIC) that best describes your facility operations and the primary product or service of this facility.

a. SIC code [2] [8] [6] [1]
b. Primary product or service: GUM AND WOOD CHEMICALS

8a. Check the item below that best describes the status of facility operations at the time of release.

a. [X] In operation
b. [ ] Temporarily inactive
c. [ ] Permanently closed

8b. Check the item below that best describes the current status of facility operations.

a. [X] In operation
b. [ ] Temporarily inactive
c. [ ] Permanently closed

If Item a is marked, go to Section II Hazardous Substance Release Profile.
If Item b or c is marked, answer Question 8.c. below.

8c. Is the shut down of operations at your facility related to the accidental release of hazardous substances?

[ ] Yes
[ ] No

SECTION II. HAZARDOUS SUBSTANCE RELEASE PROFILE

The following section asks several questions concerning the accidental release of hazardous substances. If exact responses cannot be provided, please provide estimates using your best professional judgment.

9. Indicate the date release occurred.

[0] [5] - [3] [1] - [8] [6]
(month) (day) (year)

10. Indicate the time of day release occurred.

[1] [2] : [5] [5]
[ ] A.M.
[X] P.M.

11. Indicate date release ceased.

[0] [5] - [3] [1] - [8] [6]
(month) (day) (year)

12. Indicate time of day release ceased.

[0] [1]: [0] [0]
[ ] A.M.
[X] P.M.

13. Were federal authorities notified?

[X] Yes [ ] No

a. If yes, identify all federal authorities notified regarding the release.

(If more than one, please attach list on separate page)

NATIONAL RESPONSE CENTER
(Name)

WASHINGTON
(City)

D.C.
(State)

( ) 1-800-424-8802
(Telephone)

b. Indicate the date and time of day federal authorities were notified.

[0] [5] - [3] [1] - [8] [6] (Date)
(month) (day) (year)

[0] [1] : [3] [0] (Time)
[ ] A.M.
[X] P.M.

14. Were state authorities notified?

[ ] Yes [X] No

a. If yes, identify all state authorities notified concerning the release. (If more than one, please attach list on separate page)

(Name)

(City)

(State)

( )
(Telephone)

b. Indicate the date and time of day state authorities were notified.

[ ] [ ] - [ ] [ ] - [ ] [ ] (Date)
(month) (day) (year)

[ ] [ ] : [ ] [ ] (Time)
[ ] A.M.
[ ] P.M.

15. Were local authorities notified?

[ ] Yes [X] No

a. If yes, identify all local authorities notified concerning the release. (If more than one, please attach list on separate page)

_____
(Name)

_____
(City)

_____
(State)

( )
_____
(Telephone)

b. Indicate the date and time of day local authorities were notified.

[ ] [ ] - [ ] [ ] - [ ] [ ] (Date)
(month) (day) (year)

[ ] [ ] : [ ] [ ] [ ] [ ] (Time)
[ ] A.M.
[ ] P.M.

16. Was the general public notified?

[ ] Yes [X] No

a. If yes, indicate the person that notified the general public of release.
(If more than one, please attach list on separate page)

_____
(Name)

_____
(Title)

_____
(Company or Government Office)

( )
_____
(Telephone)

b. Indicate the date and time of day the general public was notified.

[ ] [ ] - [ ] [ ] - [ ] [ ] (Date)
(month) (day) (year)

[ ] [ ] : [ ] [ ] (Time)
[ ] A.M.
[ ] P.M.

17. Were members of the general public evacuated?

[ ] Yes [X] No

a. If yes, please indicate number evacuated.

[ ] [ ] [ ] [ ] [ ] [ ]

b. Please indicate date and time of day evacuation began.

[ ] [ ] - [ ] [ ] - [ ] [ ] (Date)
(month) (day) (year)

[ ] [ ] : [ ] [ ] (Time)
[ ] A.M.
[ ] P.M.

18. To the best of your ability, indicate the weather conditions at the time of release for each item below. (est.)

a. Wind Speed (miles per hour) [0] [0] [5]

b. Wind Direction [S] [W]

c. Humidity (percent) [2] [0]

d. Temperature (Fahrenheit) [0] [9] [0]

e. Precipitation? [ ] Yes [X] No

19. Please check the one item below that best describes the location of the release within your facility.

(please check one item only)

[ ] Process vessel
[ ] Storage vessel
[ ] Valves
[X] Piping
[ ] Unknown
[ ] Other (please describe)

_____
_____
_____
_____

20. Please check the one item below that best describes the operational condition of releasing equipment at the time of the release.

(please check one item only)

[ ] Process startup
[ ] Process shutdown
[ ] Loading
[ ] Unloading
[ ] Batch operation
[ ] Maintenance
[X] Continuing operations
[ ] Unknown
[ ] Other (please describe)

_____
_____
_____
_____

21. Please check the one item below that best describes the primary cause of the release event.

[X] Equipment failure
[ ] Operator error
[ ] Bypass condition
[ ] Upset condition
[ ] Fire
[ ] Unknown
[ ] Other (Please describe)

(please check one item only)

_____
_____
_____
_____

22. Please check any items below that describe additional causes of the release event.

[ ] Equipment failure
[ ] Operator error
[ ] Bypass condition
[ ] Upset condition
[ ] Fire
[ ] Unknown
[ ] Other (Please describe)

(check as many items as apply)

_____
_____
_____
_____

23. Check the items below that describe the end effects of the release event.

[X] Spill
[X] Vapor release
[ ] Explosion
[ ] Fire
[ ] Other (Please describe)

(check as many items as apply)

_____
_____
_____
_____

24.a. Identify in the table below the name of each hazardous substance released, the quantity released, and the concentration and physical state at the time of release.

	NAME	QUANTITY	UNIT	PHYSICAL STATE	CONCENTRATION
1.	ETHYLENE OXIDE	50	lbs.	liquid	100 %
2.					
3.					
4.					

b. Please describe your methods or source of information for your responses in Question 24.a.

INVESTIGATION WITH AREA PERSONNEL. THE AMOUNT OR QUANTITY WAS ESTIMATED AS APPROXIMATELY 50 lbs FROM THE TIME THE RELEASE STARTED UNTIL THE TIME THE RELEASE WAS STOPPED.

25.a. In the table below, please estimate the quantity of substances listed in Question 24.a released to each media. Be sure to specify the measurement unit.

NAME	MEDIA	QUANTITY	UNIT
1. ETHYLENE OXIDE	Air	50	lbs
	Surface Water		
	Land		
	Ground Water		
2.	Air		
	Surface Water		
	Land		
	Ground Water		
3.	Air		
	Surface Water		
	Land		
	Ground Water		
4.	Air		
	Surface Water		
	Land		
	Ground Water		

b. Please describe your methods or source of information for your responses in Question 25.a.

THE QUANTITY RELEASED QUICKLY EVAPORATED, THEREFORE IT WAS ASSUMED THAT THE QUANTITY REPORTED IN 24.a. WAS RELEASED TO THE AIR

26.a. Did any substances identified in Questions 24 and 25, migrate beyond the legal boundaries of your facility (for example, a vapor release was carried by prevailing wind beyond the fence line of your facility)?

[X] Yes (If yes, please answer Question 26.b)
[ ] No (If no, skip Question 26.b and answer Question 27)

b. In the table below specify the quantities of substances that migrated past your facility boundaries.

	NAME	MEDIA	QUANTITY	UNIT
1.	ETHYLENE OXIDE	Air	50	lbs
		Surface Water		
		Land		
		Ground Water		
2.		Air		
		Surface Water		
		Land		
		Ground Water		
3.		Air		
		Surface Water		
		Land		
		Ground Water		
4.		Air		
		Surface Water		
		Land		
		Ground Water		

c. Please describe your methods or source of information for your responses in Question 26.b.

SINCE THE AMOUNT RELEASED IN 24.a. QUICKLY EVAPORATED INTO THE AIR AS REPORTED IN 25.a., IT WAS ASSUMED THAT THE QUANTITY REPORTED IN 25.a. EVENTUALLY MIGRATED PAST THE FACILITY BOUNDARIES.

27. Did injuries occur among facility employees as a result of the event?

[ ] Yes
[X] No
[ ] Don't know

a. If yes, please indicate number of injuries.

[ ] [ ] [ ] [ ] [ ] [ ]

[ ] Number of injuries unknown

28. Did injuries occur among the general public as a result of the event?

[ ] Yes
[X] No
[ ] Don't know

a. If yes, please indicate number of injuries.

[ ] [ ] [ ] [ ] [ ] [ ]

[ ] Number of injuries unknown

29. Did deaths occur among facility employees as a result of the event?

[ ] Yes
[X] No
[ ] Don't know

a. If yes, please indicate number of deaths.

[ ] [ ] [ ] [ ] [ ] [ ]

[ ] Number of deaths unknown

30. Did deaths occur among the general public as a result of the event?

[ ] Yes
[X] No
[ ] Don't Know

a. If yes, please indicate number of deaths.

[ ] [ ] [ ] [ ] [ ] [ ]

[ ] Number of deaths unknown

SECTION III. CLEANUP AND PREVENTION PROFILE

31. Did your facility undertake cleanup of the release?

[ ] Yes (If yes, please answer Question 32)
[X] No (If no, please answer Question 33)
SMALL RELEASE QUICKLY EVAPORATED BEFORE REMEDIAL ACTION COULD BE TAKEN.

32. Has cleanup of the release been completed?
[ ] Yes (If yes, please answer Questions 32.a and 32.b)
[ ] No (If no, please answer Questions 32.a and 32.c)

a. Please supply the name and address of the party responsible for cleanup.

_____
(Name)

_____
(Title)

_____
(Address)

_____
(City, State)

( )
_____
(Telephone)

b. Indicate the date cleanup activity ceased.

[ ] [ ] - [ ] [ ] - [ ] [ ]
(month) (day) (year)

c. Please indicate the approximate date completion of cleanup activity is expected.

[ ] [ ] - [ ] [ ] - [ ] [ ]
(month) (day) (year)

33. As simply as possible, describe release prevention practices and policies (backup systems and containment system) utilized at the facility when the release occurred.

ALL E.O. LINES ARE CHECKED FOR LEAKS.

34. Please indicate which of the prevention practices and policies listed in Question 33, if any, were ineffective in preventing the release from reaching the environment.

LINE DEVELOPED LEAK WHILE IN USE.

35. Describe equipment repairs and/or replacements (management practices, operational changes, etc.) made as a result of the release.

ENTIRE E.O. TRANSFER LINE, APPROXIMATELY 600 FT WAS INSPECTED AND REPLACED.

37. What additional preventative measure(s) will be taken to minimize the possibility of recurrence?

REGULAR LINE INSPECTIONS.

CERTIFICATION

I hereby certify that I am the Plant Manager, official in charge of environmental matters, or a corporate officer of

HERCULES INC
Name of Facility or Company

Located at WEST 7th STREET, HATTIESBURG, Ms.
Address, City, State

and that I am familiar with the responses concerning the release of hazardous substances occuring on 5-31-86
Date of Release

which are contained in this Release Prevention Questionnaire. I understand that there may be criminal penalties under the Resource Conservation and Recovery Act for knowingly omitting material information or making any false material statement or representation about the releases at my facility or company. I further certify under penalty of perjury that the foregoing responses are true and correct to the best of my knowledge.

This 12th day of DEC., 1986.

Name: G. R. YANDLE

Title: PLANT MANAGER

Signature: G R Yandle

Witness: C S Jordan

[NOTE: A separate certification must accompany each questionnaire.]

U.S. ENVIRONMENTAL PROTECTION AGENCY
RELEASE PREVENTION QUESTIONNAIRE

INITIAL REPORT

SECTION 1. FACILITY PROFILE

1. FACILITY NAME: HERCULES INC
HATTIESBURG PLANT

2. FACILITY ADDRESS: WEST 7th STREET
Street
HATTIESBURG
City
MS.
State
39401
Zip Code

3. NAME OF OWNER: HERCULES INC.

4. ADDRESS OF OWNER: HERCULES PLAZA
Street
WILMINGTON
City
DE
State
19894
Zip Code

5. RESPONDENT: CHARLES JORDAN
Name
ENVIRONMENTAL SUPERVISOR
Title
WEST 7th STREET
Street
HATTIESBURG
City
MS.
State
39401
Zip Code
(601) 545 3450 360
Telephone

6. Please indicate the year facility operations began.

[1] [9] [2] [4]

7. Identify the four-digit Standard Industrial Classification (SIC) that best describes your facility operations and the primary product or service of this facility.

a. SIC code [2] [8] [6] [1]
b. Primary product or service: GUM AND WOOD CHEMICALS

8a. Check the item below that best describes the status of facility operations at the time of release.

a. [X] In operation
b. [ ] Temporarily inactive
c. [ ] Permanently closed

8b. Check the item below that best describes the current status of facility operations.

a. [X] In operation
b. [ ] Temporarily inactive
c. [ ] Permanently closed

If Item a is marked, go to Section II Hazardous Substance Release Profile. If Item b or c is marked, answer Question 8.c. below.

8c. Is the shut down of operations at your facility related to the accidental release of hazardous substances?

[ ] Yes
[ ] No

SECTION II. HAZARDOUS SUBSTANCE RELEASE PROFILE

The following section asks several questions concerning the accidental release of hazardous substances. If exact responses cannot be provided, please provide estimates using your best professional judgment.

9. Indicate the date release occurred.

[0] [6] - [0] [4] - [8] [6]
(month) (day) (year)

10. Indicate the time of day release occurred.

[0] [8] : [3] [0]
[X] A.M.
[ ] P.M.

11. Indicate date release ceased.

[0] [6] - [0] [4] - [8] [6]
(month) (day) (year)

12. Indicate time of day release ceased.

[0] [8]: [3] [5]
[X] A.M.
[ ] P.M.

13. Were federal authorities notified?

[X] Yes [ ] No

a. If yes, identify all federal authorities notified regarding the release.

(If more than one, please attach list on separate page)

NATIONAL RESPONSE CENTER
(Name)

WASHINGTON
(City)

D.C.
(State)

( ) 1-800-424-8802
(Telephone)

b. Indicate the date and time of day federal authorities were notified.

[0] [6] - [0] [4] - [8] [6] (Date)
(month) (day) (year)

[0] [9] : [4] [2] (Time)
[X] A.M.
[ ] P.M.

14. Were state authorities notified?

[ ] Yes [X] No

a. If yes, identify all state authorities notified concerning the release. (If more than one, please attach list on separate page)

(Name)

(City)

(State)

( )
(Telephone)

b. Indicate the date and time of day state authorities were notified.

[ ] [ ] - [ ] [ ] - [ ] [ ] (Date)
(month) (day) (year)

[ ] [ ] : [ ] [ ] (Time)
[ ] A.M.
[ ] P.M.

15. Were local authorities notified?

[ ] Yes [X] No

a. If yes, identify all local authorities notified concerning the release. (If more than one, please attach list on separate page)

_____
(Name)

_____
(City)

_____
(State)

( )
_____
(Telephone)

b. Indicate the date and time of day local authorities were notified.

[ ] [ ] - [ ] [ ] - [ ] [ ] (Date)
(month) (day) (year)

[ ] [ ] : [ ] [ ] [ ] [ ] (Time)
[ ] A.M.
[ ] P.M.

16. Was the general public notified?

[ ] Yes [X] No

a. If yes, indicate the person that notified the general public of release.
(If more than one, please attach list on separate page)

_____
(Name)

_____
(Title)

_____
(Company or Government Office)

( )
_____
(Telephone)

b. Indicate the date and time of day the general public was notified.

[ ] [ ] - [ ] [ ] - [ ] [ ] (Date)
(month) (day) (year)

[ ] [ ] : [ ] [ ] (Time)
[ ] A.M.
[ ] P.M.

17. Were members of the general public evacuated?

[ ] Yes [X] No

a. If yes, please indicate number evacuated.

[ ] [ ] [ ] [ ] [ ] [ ]

b. Please indicate date and time of day evacuation began.

[ ] [ ] - [ ] [ ] - [ ] [ ] (Date)
(month) (day) (year)

[ ] [ ] : [ ] [ ] (Time)
[ ] A.M.
[ ] P.M.

18. To the best of your ability, indicate the weather conditions at the time of release for each item below. (est.)

a. Wind Speed (miles per hour)	[0] [0] [5]
b. Wind Direction	[S] [W]
c. Humidity (percent)	[8] [0]
d. Temperature (Fahrenheit)	[0] [8] [0]
e. Precipitation?	[X] Yes [ ] No

19. Please check the one item below that best describes the location of the release within your facility.

(please check one item only)

- [ ] Process vessel
- [ ] Storage vessel
- [ ] Valves
- [X] Piping
- [ ] Unknown
- [ ] Other (please describe)

_____
_____
_____
_____

20. Please check the one item below that best describes the operational condition of releasing equipment at the time of the release.

(please check one item only)

- [ ] Process startup
- [ ] Process shutdown
- [ ] Loading
- [ ] Unloading
- [ ] Batch operation
- [X] Maintenance
- [ ] Continuing operations
- [ ] Unknown
- [ ] Other (please describe)

_____
_____
_____
_____

21. Please check the one item below that best describes the primary cause of the release event.

[ ] Equipment failure
[ ] Operator error
[ ] Bypass condition
[ ] Upset condition
[ ] Fire
[ ] Unknown
[X] Other (Please describe)

(please check one item only)

PROCEDURE CALLS FOR PURGING E.O. TRANSFER LINE WITH NITROGEN PRIOR TO OPENING. LINE WAS NOT COMPLETELY FREE OF E.O. WHEN OPENED.

22. Please check any items below that describe additional causes of the release event.

[ ] Equipment failure
[ ] Operator error
[ ] Bypass condition
[ ] Upset condition
[ ] Fire
[ ] Unknown
[ ] Other (Please describe)

(check as many items as apply)

23. Check the items below that describe the end effects of the release event.

[X] Spill
[X] Vapor release
[ ] Explosion
[ ] Fire
[ ] Other (Please describe)

(check as many items as apply)

24.a. Identify in the table below the name of each hazardous substance released, the quantity released, and the concentration and physical state at the time of release.

	NAME	QUANTITY	UNIT	PHYSICAL STATE	CONCENTRATION
1.	ETHYLENE OXIDE	< 1	GAL.	LIQUID	100%
2.					
3.					
4.					

b. Please describe your methods or source of information for your responses in Question 24.a.

INVESTIGATION WITH AREA PERSONNEL. THE AMOUNT OR QUANTITY WAS ESTIMATED AS LESS THAN A GALLON.

25.a. In the table below, please estimate the quantity of substances listed in Question 24.a released to each media. Be sure to specify the measurement unit.

NAME	MEDIA	QUANTITY	UNIT
1. ETHYLENE OXIDE	Air	< 1	GAL
	Surface Water		
	Land		
	Ground Water		
2.	Air		
	Surface Water		
	Land		
	Ground Water		
3.	Air		
	Surface Water		
	Land		
	Ground Water		
4.	Air		
	Surface Water		
	Land		
	Ground Water		

b. Please describe your methods or source of information for your responses in Question 25.a.

THE QUANTITY RELEASED QUICKLY EVAPORATED, THEREFORE IT WAS ASSUMED THAT THE QUANTITY REPORTED IN 24.a. WAS RELEASED TO THE AIR.

26.a. Did any substances identified in Questions 24 and 25, migrate beyond the legal boundaries of your facility (for example, a vapor release was carried by prevailing wind beyond the fence line of your facility)?

[X] Yes (If yes, please answer Question 26.b)
[ ] No (If no, skip Question 26.b and answer Question 27)

b. In the table below specify the quantities of substances that migrated past your facility boundaries.

	NAME	MEDIA	QUANTITY	UNIT
1.	ETHYLENE OXIDE	Air	< 1	GAL
		Surface Water		
		Land		
		Ground Water		
2.		Air		
		Surface Water		
		Land		
		Ground Water		
3.		Air		
		Surface Water		
		Land		
		Ground Water		
4.		Air		
		Surface Water		
		Land		
		Ground Water		

c. Please describe your methods or source of information for your responses in Question 26.b.

SINCE THE AMOUNT RELEASED IN 24.a. QUICKLY EVAPORATED INTO THE AIR AS REPORTED IN 25.a., IT WAS ASSUMED THAT THE QUANTITY REPORTED IN 25.a. EVENTUALLY MIGRATED PAST THE FACILITY BOUNDARIES.

27. Did injuries occur among facility employees as a result of the event?

[X] Yes (Employee used SAFETY shower)
[ ] No
[ ] Don't know

a. If yes, please indicate number of injuries.

[0] [0] [0] [0] [0] [1]

[0] Number of injuries unknown

28. Did injuries occur among the general public as a result of the event?

[ ] Yes
[X] No
[ ] Don't know

a. If yes, please indicate number of injuries.

[ ] [ ] [ ] [ ] [ ] [ ]

[ ] Number of injuries unknown

29. Did deaths occur among facility employees as a result of the event?

[ ] Yes
[X] No
[ ] Don't know

a. If yes, please indicate number of deaths.

[ ] [ ] [ ] [ ] [ ] [ ]

[ ] Number of deaths unknown

30. Did deaths occur among the general public as a result of the event?

[ ] Yes
[X] No
[ ] Don't Know

a. If yes, please indicate number of deaths.

[ ] [ ] [ ] [ ] [ ] [ ]

[ ] Number of deaths unknown

SECTION III. CLEANUP AND PREVENTION PROFILE

31. Did your facility undertake cleanup of the release?

[ ] Yes (If yes, please answer Question 32)
[X] No (If no, please answer Question 33)
SMALL RELEASE QUICKLY EVAPORATED BEFORE REMEDIAL ACTION COULD BE TAKEN.

32. Has cleanup of the release been completed?
[ ] Yes (If yes, please answer Questions 32.a and 32.b)
[ ] No (If no, please answer Questions 32.a and 32.c)

a. Please supply the name and address of the party responsible for cleanup.

_____
(Name)

_____
(Title)

_____
(Address)

_____
(City, State)

( )
_____
(Telephone)

b. Indicate the date cleanup activity ceased.

[ ] [ ] - [ ] [ ] - [ ] [ ]
(month) (day) (year)

c. Please indicate the approximate date completion of cleanup activity is expected.

[ ] [ ] - [ ] [ ] - [ ] [ ]
(month) (day) (year)

33. As simply as possible, describe release prevention practices and policies (backup systems and containment system) utilized at the facility when the release occurred.

PRIOR TO DISCONNECTING E.O. TRANSFER LINE, THE LINE IS PURGED WITH NITROGEN TO REMOVE E.D.

34. Please indicate which of the prevention practices and policies listed in Question 33, if any, were ineffective in preventing the release from reaching the environment.

LINE WAS NOT COMPLETELY PURGED PRIOR TO OPENING.

35. Describe equipment repairs and/or replacements (management practices, operational changes, etc.) made as a result of the release.

REVIEW PURGE PROCEDURES WITH OPERATORS AND EMPHASIZE THE IMPORTANCE OF LINE PURGING. IMPROVEMENTS WERE MADE IN PURGE PROCEDURES TO FACILITATE LINE CLEARING BY INSTALLING ADDITIONAL NITROGEN PURGE FOR SMALLER SECTIONS OF LINE.

37. What additional preventative measure(s) will be taken to minimize the possibility of recurrence?

REVIEW PURGE PROCEDURES ON REGULAR BASIS

CERTIFICATION

I hereby certify that I am the Plant Manager, official in charge of environmental matters, or a corporate officer of

HERCULES INC
Name of Facility or Company

Located at WEST 7th STREET, HATTIESBURG, Ms.
Address, City, State

and that I am familiar with the responses concerning the release of hazardous substances occuring on 6-4-86
Date of Release

which are contained in this Release Prevention Questionnaire. I understand that there may be criminal penalties under the Resource Conservation and Recovery Act for knowingly omitting material information or making any false material statement or representation about the releases at my facility or company. I further certify under penalty of perjury that the foregoing responses are true and correct to the best of my knowledge.

This 12 th day of DEC, 1986.

Name: G R. YANDLE

Title: PLANT MANAGER.

Signature: G R Yandle

Witness: C S Jordan

[NOTE: A separate certification must accompany each questionnaire.]

U.S. ENVIRONMENTAL PROTECTION AGENCY
RELEASE PREVENTION QUESTIONNAIRE

INITIAL REPORT

SECTION 1. FACILITY PROFILE

1. FACILITY NAME: HERCULES INC
HATTIESBURG PLANT

2. FACILITY ADDRESS: WEST 7th STREET
Street
HATTIESBURG
City
MS.
State
39401
Zip Code

3. NAME OF OWNER: HERCULES INC.

4. ADDRESS OF OWNER: HERCULES PLAZA
Street
WILMINGTON
City
DE
State
19894
Zip Code

5. RESPONDENT: CHARLES JORDAN
Name
ENVIRONMENTAL SUPERVISOR
Title
WEST 7th STREET
Street
HATTIESBURG
City
MS.
State
39401
Zip Code
601 545 3450 360
Telephone

6. Please indicate the year facility operations began.

[1] [9] [2] [4]

7. Identify the four-digit Standard Industrial Classification (SIC) that best describes your facility operations and the primary product or service of this facility.

a. SIC code [2] [8] [6] [1]
b. Primary product or service: GUM AND WOOD CHEMICALS

8a. Check the item below that best describes the status of facility operations at the time of release.

a. [X] In operation
b. [ ] Temporarily inactive
c. [ ] Permanently closed

8b. Check the item below that best describes the current status of facility operations.

a. [X] In operation
b. [ ] Temporarily inactive
c. [ ] Permanently closed

If Item a is marked, go to Section II Hazardous Substance Release Profile. If Item b or c is marked, answer Question 8.c. below.

8c. Is the shut down of operations at your facility related to the accidental release of hazardous substances?

[ ] Yes
[ ] No

SECTION II. HAZARDOUS SUBSTANCE RELEASE PROFILE

The following section asks several questions concerning the accidental release of hazardous substances. If exact responses cannot be provided, please provide estimates using your best professional judgment.

9. Indicate the date release occurred.

[0] [6] - [1] [6] - [8] [6]
(month) (day) (year)

10. Indicate the time of day release occurred.

[0] [3] : [4] [5]
[ ] A.M.
[X] P.M.

11. Indicate date release ceased.

[0] [6] - [1] [6] - [8] [6]
(month) (day) (year)

12. Indicate time of day release ceased.

[0] [3] : [5] [0]
[ ] A.M.
[X] P.M.

13. Were federal authorities notified?

[X] Yes [ ] No

a. If yes, identify all federal authorities notified regarding the release.

(If more than one, please attach list on separate page)

NATIONAL RESPONSE CENTER
(Name)

WASHINGTON
(City)

D.C.
(State)

( ) 1-800-424-8802
(Telephone)

b. Indicate the date and time of day federal authorities were notified.

[0] [6] - [1] [6] - [8] [6] (Date)
(month) (day) (year)

[0] [5] : [2] [5] (Time)
[ ] A.M.
[X] P.M.

14. Were state authorities notified?

[ ] Yes [X] No

a. If yes, identify all state authorities notified concerning the release.
(If more than one, please attach list on separate page)

(Name)

(City)

(State)

( )
(Telephone)

b. Indicate the date and time of day state authorities were notified.

[ ] [ ] - [ ] [ ] - [ ] [ ] (Date)
(month) (day) (year)

[ ] [ ] : [ ] [ ] (Time)
[ ] A.M.
[ ] P.M.

15. Were local authorities notified?

[ ] Yes [X] No

a. If yes, identify all local authorities notified concerning the release. (If more than one, please attach list on separate page)

_____
(Name)

_____
(City)

_____
(State)

( )
_____
(Telephone)

b. Indicate the date and time of day local authorities were notified.

[ ] [ ] - [ ] [ ] - [ ] [ ] (Date)
(month) (day) (year)

[ ] [ ] : [ ] [ ] [ ] [ ] (Time)
[ ] A.M.
[ ] P.M.

16. Was the general public notified?

[ ] Yes [X] No

a. If yes, indicate the person that notified the general public of release.
(If more than one, please attach list on separate page)

_____
(Name)

_____
(Title)

_____
(Company or Government Office)

( )
_____
(Telephone)

b. Indicate the date and time of day the general public was notified.

[ ] [ ] - [ ] [ ] - [ ] [ ] (Date)
(month) (day) (year)

[ ] [ ] : [ ] [ ] (Time)
[ ] A.M.
[ ] P.M.

17. Were members of the general public evacuated?

[ ] Yes [X] No

a. If yes, please indicate number evacuated.

[ ] [ ] [ ] [ ] [ ] [ ]

b. Please indicate date and time of day evacuation began.

[ ] [ ] - [ ] [ ] - [ ] [ ] (Date)
(month) (day) (year)

[ ] [ ] : [ ] [ ] (Time)
[ ] A.M.
[ ] P.M.

18. To the best of your ability, indicate the weather conditions at the time of release for each item below. (est.)

a. Wind Speed (miles per hour) [0] [0] [5]

b. Wind Direction [S] [W]

c. Humidity (percent) [8] [0]

d. Temperature (Fahrenheit) [0] [8] [0]

e. Precipitation? [X] Yes [ ] No

19. Please check the one item below that best describes the location of the release within your facility.

(please check one item only)

[ ] Process vessel
[X] Storage vessel
[ ] Valves
[ ] Piping
[ ] Unknown
[ ] Other (please describe)

_____
_____
_____
_____

20. Please check the one item below that best describes the operational condition of releasing equipment at the time of the release.

(please check one item only)

[ ] Process startup
[ ] Process shutdown
[ ] Loading
[X] Unloading
[ ] Batch operation
[ ] Maintenance
[ ] Continuing operations
[ ] Unknown
[ ] Other (please describe)

_____
_____
_____
_____

21. Please check the one item below that best describes the primary cause of the release event.

[X] Equipment failure
[ ] Operator error
[ ] Bypass condition
[ ] Upset condition
[ ] Fire
[ ] Unknown
[ ] Other (Please describe)

(please check one item only)

_____
_____
_____
_____

22. Please check any items below that describe additional causes of the release event.

[ ] Equipment failure
[ ] Operator error
[ ] Bypass condition
[ ] Upset condition
[ ] Fire
[ ] Unknown
[ ] Other (Please describe)

(check as many items as apply)

_____
_____
_____
_____

23. Check the items below that describe the end effects of the release event.

[X] Spill
[X] Vapor release
[ ] Explosion
[ ] Fire
[ ] Other (Please describe)

(check as many items as apply)

_____
_____
_____
_____

24.a. Identify in the table below the name of each hazardous substance released, the quantity released, and the concentration and physical state at the time of release.

	NAME	QUANTITY	UNIT	PHYSICAL STATE	CONCENTRATION
1.	ETHYLENE OXIDE	8	GALS.	LIQUID	100%
2.					
3.					
4.					

b. Please describe your methods or source of information for your responses in Question 24.a.

INVESTIGATION WITH AREA PERSONNEL. THE AMOUNT OR QUANTITY WAS ESTIMATED AS APPROXIMATELY 8 GALLONS FROM THE TIME THE RELEASE STARTED UNTIL THE TIME THE RELEASE WAS STOPPED.

25.a. In the table below, please estimate the quantity of substances listed in Question 24.a released to each media. Be sure to specify the measurement unit.

NAME	MEDIA	QUANTITY	UNIT
1. ETHYLENE OXIDE	Air	8	GAS
	Surface Water		
	Land		
	Ground Water		
2.	Air		
	Surface Water		
	Land		
	Ground Water		
3.	Air		
	Surface Water		
	Land		
	Ground Water		
4.	Air		
	Surface Water		
	Land		
	Ground Water		

b. Please describe your methods or source of information for your responses in Question 25.a.

THE QUANTITY RELEASED QUICKLY EVAPORATED, THEREFORE IT WAS ASSUMED THAT THE QUANTITY REPORTED IN 24.a. WAS RELEASED TO THE AIR.

26.a. Did any substances identified in Questions 24 and 25, migrate beyond the legal boundaries of your facility (for example, a vapor release was carried by prevailing wind beyond the fence line of your facility)?

[X] Yes (If yes, please answer Question 26.b)
[ ] No (If no, skip Question 26.b and answer Question 27)

b. In the table below specify the quantities of substances that migrated past your facility boundaries.

NAME	MEDIA	QUANTITY	UNIT
1. ETHYLENE OXIDE	Air	8	GALS
	Surface Water		
	Land		
	Ground Water		
2. _____	Air		
	Surface Water		
	Land		
	Ground Water		
3. _____	Air		
	Surface Water		
	Land		
	Ground Water		
4. _____	Air		
	Surface Water		
	Land		
	Ground Water		

c. Please describe your methods or source of information for your responses in Question 26.b.

SINCE THE AMOUNT RELEASED IN 24.a. QUICKLY EVAPORATED INTO THE AIR AS REPORTED IN 25.a., IT WAS ASSUMED THAT THE QUANTITY REPORTED IN 25.a. EVENTUALLY MIGRATED PAST THE FACILITY BOUNDARIES.

27. Did injuries occur among facility employees as a result of the event?

[ ] Yes
[X] No
[ ] Don't know

a. If yes, please indicate number of injuries.

[ ] [ ] [ ] [ ] [ ] [ ]

[ ] Number of injuries unknown

28. Did injuries occur among the general public as a result of the event?

[ ] Yes
[X] No
[ ] Don't know

a. If yes, please indicate number of injuries.

[ ] [ ] [ ] [ ] [ ] [ ]

[ ] Number of injuries unknown

29. Did deaths occur among facility employees as a result of the event?

[ ] Yes
[X] No
[ ] Don't know

a. If yes, please indicate number of deaths.

[ ] [ ] [ ] [ ] [ ] [ ]

[ ] Number of deaths unknown

30. Did deaths occur among the general public as a result of the event?

[ ] Yes
[X] No
[ ] Don't Know

a. If yes, please indicate number of deaths.

[ ] [ ] [ ] [ ] [ ] [ ]

[ ] Number of deaths unknown

SECTION III. CLEANUP AND PREVENTION PROFILE

31. Did your facility undertake cleanup of the release?

[ ] Yes (If yes, please answer Question 32)
[X] No (If no, please answer Question 33)
SMALL RELEASE QUICKLY EVAPORATED BEFORE REMEDIAL ACTION COULD BE TAKEN.

32. Has cleanup of the release been completed?
[ ] Yes (If yes, please answer Questions 32.a and 32.b)
[ ] No (If no, please answer Questions 32.a and 32.c)

a. Please supply the name and address of the party responsible for cleanup.

_____
(Name)

_____
(Title)

_____
(Address)

_____
(City, State)

( )
_____
(Telephone)

b. Indicate the date cleanup activity ceased.

[ ] [ ] - [ ] [ ] - [ ] [ ]
(month) (day) (year)

c. Please indicate the approximate date completion of cleanup activity is expected.

[ ] [ ] - [ ] [ ] - [ ] [ ]
(month) (day) (year)

33. As simply as possible, describe release prevention practices and policies (backup systems and containment system) utilized at the facility when the release occurred.

STORAGE TANK LEVEL INDICATOR IS USED WHEN E.O. IS BEING UNLOADED. LEVEL INDICATOR FAILED TO INDICATE CORRECT LEVEL. OPERATOR OBSERVED RELEASE AND TOOK PROMPT CORRECTIVE ACTION.

34. Please indicate which of the prevention practices and policies listed in Question 33, if any, were ineffective in preventing the release from reaching the environment.

LEVEL INDICATOR FAILURE

35. Describe equipment repairs and/or replacements (management practices, operational changes, etc.) made as a result of the release.

LEVEL INDICATOR HAS BEEN REPAIRED.

37. What additional preventative measure(s) will be taken to minimize the possibility of recurrence?

ROUTINE LEVEL INDICATOR MAINTENANCE.

CERTIFICATION

I hereby certify that I am the Plant Manager, official in charge of environmental matters, or a corporate officer of

HERCULES INC
Name of Facility or Company

Located at WEST 7th STREET, HATTIESBURG, Ms.
Address, City, State

and that I am familiar with the responses concerning the release of hazardous substances occuring on 6-16-86
Date of Release

which are contained in this Release Prevention Questionnaire. I understand that there may be criminal penalties under the Resource Conservation and Recovery Act for knowingly omitting material information or making any false material statement or representation about the releases at my facility or company. I further certify under penalty of perjury that the foregoing responses are true and correct to the best of my knowledge.

This 12th day of DEC, 1986.

Name: G.R. YANDLE

Title: PLANT MANAGER

Signature: G R Yandle

Witness: C S Jordan

[NOTE: A separate certification must accompany each questionnaire.]

U.S. ENVIRONMENTAL PROTECTION AGENCY
RELEASE PREVENTION QUESTIONNAIRE

INITIAL REPORT

SECTION 1. FACILITY PROFILE

1. FACILITY NAME: HERCULES INC
HATTIESBURG PLANT

2. FACILITY ADDRESS: WEST 7th STREET
Street
HATTIESBURG
City
MS.
State
39401
Zip Code

3. NAME OF OWNER: HERCULES INC.

4. ADDRESS OF OWNER: HERCULES PLAZA
Street
WILMINGTON
City
DE
State
19894
Zip Code

5. RESPONDENT: CHARLES JORDAN
Name
ENVIRONMENTAL SUPERVISOR
Title
WEST 7th STREET
Street
HATTIESBURG
City
MS.
State
39401
Zip Code
(601) 545 3450 360
Telephone

6. Please indicate the year facility operations began.

[1] [9] [2] [4]

7. Identify the four-digit Standard Industrial Classification (SIC) that best describes your facility operations and the primary product or service of this facility.

a. SIC code [2] [8] [6] [1]
b. Primary product or service: GUM AND WOOD CHEMICALS

8a. Check the item below that best describes the status of facility operations at the time of release.

a. [X] In operation
b. [ ] Temporarily inactive
c. [ ] Permanently closed

8b. Check the item below that best describes the current status of facility operations.

a. [X] In operation
b. [ ] Temporarily inactive
c. [ ] Permanently closed

If Item a is marked, go to Section II Hazardous Substance Release Profile. If Item b or c is marked, answer Question 8.c. below.

8c. Is the shut down of operations at your facility related to the accidental release of hazardous substances?

[ ] Yes
[ ] No

SECTION II. HAZARDOUS SUBSTANCE RELEASE PROFILE

The following section asks several questions concerning the accidental release of hazardous substances. If exact responses cannot be provided, please provide estimates using your best professional judgment.

9. Indicate the date release occurred.

[0] [8] - [2] [5] - [8] [6]
(month) (day) (year)

10. Indicate the time of day release occurred.

[1] [0] : [0] [0]
[X] A.M.
[ ] P.M.

DISCOVERED LEAK. LEAKING PRIOR TO ACTUAL DISCOVERY.

11. Indicate date release ceased.

[0] [8] - [2] [5] - [8] [6]
(month) (day) (year)

12. Indicate time of day release ceased.

[1] [0]: [5] [0]
[X] A.M.
[ ] P.M.

13. Were federal authorities notified?

[X] Yes [ ] No

a. If yes, identify all federal authorities notified regarding the release.

(If more than one, please attach list on separate page)

NATIONAL RESPONSE CENTER
(Name)

WASHINGTON
(City)

D.C.
(State)

( ) 1-800-424-8802
(Telephone)

b. Indicate the date and time of day federal authorities were notified.

[0] [8] - [2] [5] - [8] [6] (Date)
(month) (day) (year)

[0] [1] : [2] [5] (Time)
[ ] A.M.
[X] P.M.

14. Were state authorities notified?

[X] Yes [ ] No

a. If yes, identify all state authorities notified concerning the release.
(If more than one, please attach list on separate page)

BUREAU OF POLLUTION CONTROL
(Name)

JACKSON
(City)

MS.
(State)

(601) 961-5340
(Telephone)

b. Indicate the date and time of day state authorities were notified.

[0] [8] - [2] [5] - [8] [6] (Date)
(month) (day) (year)

[0] [1] : [4] [0] (Time) (est.)
[ ] A.M.
[X] P.M.

15. Were local authorities notified?

[ ] Yes [X] No

a. If yes, identify all local authorities notified concerning the release. (If more than one, please attach list on separate page)

(Name)

(City)

(State)

( )
(Telephone)

b. Indicate the date and time of day local authorities were notified.

[ ] [ ] - [ ] [ ] - [ ] [ ] (Date)
(month) (day) (year)

[ ] [ ] : [ ] [ ] [ ] [ ] (Time)
[ ] A.M.
[ ] P.M.

16. Was the general public notified?

[ ] Yes [X] No

a. If yes, indicate the person that notified the general public of release.
(If more than one, please attach list on separate page)

_____
(Name)

_____
(Title)

_____
(Company or Government Office)

( )
_____
(Telephone)

b. Indicate the date and time of day the general public was notified.

[ ] [ ] - [ ] [ ] - [ ] [ ] (Date)
(month) (day) (year)

[ ] [ ] : [ ] [ ] (Time)
[ ] A.M.
[ ] P.M.

17. Were members of the general public evacuated?

[ ] Yes [X] No

a. If yes, please indicate number evacuated.

[ ] [ ] [ ] [ ] [ ] [ ]

b. Please indicate date and time of day evacuation began.

[ ] [ ] - [ ] [ ] - [ ] [ ] (Date)
(month) (day) (year)

[ ] [ ] : [ ] [ ] (Time)
[ ] A.M.
[ ] P.M.

18. To the best of your ability, indicate the weather conditions at the time of release for each item below. (est.)

a. Wind Speed (miles per hour) [0] [0] [5]

b. Wind Direction [S] [W]

c. Humidity (percent) [2] [0]

d. Temperature (Fahrenheit) [0] [9] [0]

e. Precipitation? [ ] Yes [X] No

19. Please check the one item below that best describes the location of the release within your facility.

(please check one item only)

[ ] Process vessel
[X] Storage vessel
[ ] Valves
[ ] Piping
[ ] Unknown
[ ] Other (please describe)

20. Please check the one item below that best describes the operational condition of releasing equipment at the time of the release.

(please check one item only)

[ ] Process startup
[ ] Process shutdown
[ ] Loading
[ ] Unloading
[ ] Batch operation
[ ] Maintenance
[ ] Continuing operations
[ ] Unknown
[X] Other (please describe)

STORAGE TANK FAILURE

21. Please check the one item below that best describes the primary cause of the release event.

[X] Equipment failure
[ ] Operator error
[ ] Bypass condition
[ ] Upset condition
[ ] Fire
[ ] Unknown
[ ] Other (Please describe)

(please check one item only)

_____
_____
_____
_____

22. Please check any items below that describe additional causes of the release event.

[ ] Equipment failure
[ ] Operator error
[ ] Bypass condition
[ ] Upset condition
[ ] Fire
[ ] Unknown
[ ] Other (Please describe)

(check as many items as apply)

_____
_____
_____
_____

23. Check the items below that describe the end effects of the release event.

[X] Spill
[X] Vapor release
[ ] Explosion
[ ] Fire
[ ] Other (Please describe)

(check as many items as apply)

_____
_____
_____
_____

24.a. Identify in the table below the name of each hazardous substance released, the quantity released, and the concentration and physical state at the time of release. (MIXED SOLVENT)

NAME	QUANTITY	UNIT	PHYSICAL STATE	CONCENTRATION
1. TOLUENE	73,789	lbs	LIQUID	
2. TETRAHYDROFURAN	57,748	lbs	LIQUID	
3. DIETHYL ETHER	9,304	lbs	LIQUID	
4. ACETONE	5,293	lbs	LIQUID	
EPICHLORONYDRIN	1,122	lbs.	LIQUID	

b. Please describe your methods or source of information for your responses in Question 24.a.

INVESTIGATION WITH AREA PERSONNEL, STORAGE TANK INVENTORY, AND MIXED SOLVENT CHEMICAL ANALYSIS. DATA REPRESENTS MAXIMUM POSSIBLE RELEASE.

25.a. In the table below, please estimate the quantity of substances listed in Question 24.a released to each media. Be sure to specify the measurement unit.

NAME	MEDIA	QUANTITY	UNIT
1. TOLUENE	Air	66,410	lbs
	Surface Water		
	Land		
	Ground Water		
2. TETRAHYDROFURAN	Air	51,973	lbs
	Surface Water		
	Land		
	Ground Water		
3. DIETHYL ETHER	Air	8,373	lbs
	Surface Water		
	Land		
	Ground Water		
4. ACETONE	Air	4,763	lbs
	Surface Water		
	Land		
	Ground Water		
EPICHLOROHYDRIN	AIR	1,009	lbs

b. Please describe your methods or source of information for your responses in Question 25.a.

REPRESENTS THE MAXIMUM POSSIBLE LOSS FROM STORAGE TANK INVENTORY AND ACTUAL RECOVERY. SOME ADDITIONAL RECOVERY OR CONTAINMENT IN OUR WASTEWATER TREATMENT FACILITY IS NOT INCLUDED IN IN THE AMOUNT RECOVERED. THE AMOUNTS LISTED IN 25.a. ARE 90% OF THE AMOUNTS LISTED IN 24.a. (less 10% Recovery).

26.a. Did any substances identified in Questions 24 and 25, migrate beyond the legal boundaries of your facility (for example, a vapor release was carried by prevailing wind beyond the fence line of your facility)?

[X] Yes (If yes, please answer Question 26.b)
[ ] No (If no, skip Question 26.b and answer Question 27)

b. In the table below specify the quantities of substances that migrated past your facility boundaries.

NAME	MEDIA	QUANTITY	UNIT
1. TOLUENE	Air	66,410	lbs
	Surface Water		
	Land		
	Ground Water		
2. TETRAHYDROFURAN	Air	51,973	lbs
	Surface Water		
	Land		
	Ground Water		
3. DIETHYL ETHER	Air	8,378	lbs
	Surface Water		
	Land		
	Ground Water		
4. ACETONE	Air	4,763	lbs
	Surface Water		
	Land		
	Ground Water		
EPICHLOROHYDRIN	Air	1009	lbs

c. Please describe your methods or source of information for your responses in Question 26.b.

ASSUMED THE MAXIMUM POSSIBLE RELEASE REPORTED IN 25.a. MIGRATED PAST THE FACILITY BOUNDARIES

27. Did injuries occur among facility employees as a result of the event?

[ ] Yes
[X] No
[ ] Don't know

a. If yes, please indicate number of injuries.

[ ] [ ] [ ] [ ] [ ] [ ]

[ ] Number of injuries unknown

28. Did injuries occur among the general public as a result of the event?

[ ] Yes
[X] No
[ ] Don't know

a. If yes, please indicate number of injuries.

[ ] [ ] [ ] [ ] [ ] [ ]

[ ] Number of injuries unknown

29. Did deaths occur among facility employees as a result of the event?

[ ] Yes
[X] No
[ ] Don't know

a. If yes, please indicate number of deaths.

[ ] [ ] [ ] [ ] [ ] [ ]

[ ] Number of deaths unknown

30. Did deaths occur among the general public as a result of the event?

[ ] Yes
[X] No
[ ] Don't Know

a. If yes, please indicate number of deaths.

[ ] [ ] [ ] [ ] [ ] [ ]

[ ] Number of deaths unknown

SECTION III. CLEANUP AND PREVENTION PROFILE

31. Did your facility undertake cleanup of the release?

[X] Yes (If yes, please answer Question 32)
[ ] No (If no, please answer Question 33)

32. Has cleanup of the release been completed?
[X] Yes (If yes, please answer Questions 32.a and 32.b)
[ ] No (If no, please answer Questions 32.a and 32.c)

a. Please supply the name and address of the party responsible for cleanup.

CHARLES JORDAN
(Name)

ENVIRONMENTAL SUPERVISOR
(Title)

WEST 7th STREET
(Address)

HATTIESBURG MS.
(City, State)

(601) 545 3450
(Telephone)

b. Indicate the date cleanup activity ceased.

[0] [8] - [2] [6] - [8] [6]
(month) (day) (year)

c. Please indicate the approximate date completion of cleanup activity is expected.

[ ] [ ] - [ ] [ ] - [ ] [ ]
(month) (day) (year)

33. As simply as possible, describe release prevention practices and policies (backup systems and containment system) utilized at the facility when the release occurred.

MIXED PROCESS SOLVENT WAS STORED IN A DIKED STORAGE TANK

34. Please indicate which of the prevention practices and policies listed in Question 33, if any, were ineffective in preventing the release from reaching the environment.

STORAGE TANK DEVELOPED LEAK.

35. Describe equipment repairs and/or replacements (management practices, operational changes, etc.) made as a result of the release.

TANK LEAK WAS STOPPED. AFTER TANK WAS SECURE, SOLVENT WAS MOVED TO OTHER TANKS.

37. What additional preventative measure(s) will be taken to minimize the possibility of recurrence?

TANK IS EMPTY AND NOT IN USE.

CERTIFICATION

I hereby certify that I am the Plant Manager, official in charge of environmental matters, or a corporate officer of

HERCULES INC
Name of Facility or Company

Located at WEST 7th STREET, HATTIESBURG, Miss.
Address, City, State

and that I am familiar with the responses concerning the release of hazardous substances occuring on 8-25-86
Date of Release

which are contained in this Release Prevention Questionnaire. I understand that there may be criminal penalties under the Resource Conservation and Recovery Act for knowingly omitting material information or making any false material statement or representation about the releases at my facility or company. I further certify under penalty of perjury that the foregoing responses are true and correct to the best of my knowledge.

This 12th day of DEC, 1986.

Name: G. R. YANDLE

Title: PLANT MANAGER

Signature: G R Yandle

Witness: C S Jordan

[NOTE: A separate certification must accompany each questionnaire.]

UNITED STATES ENVIRONMENTAL PROTECTION AGENCY

REGION IV

345 COURTLAND STREET
ATLANTA, GEORGIA 30365

NOV 17 1986

CERTIFIED MAIL
RETURN RECEIPT REQUESTED

RECEIVED
NOV 24 1986
Department of Natural Resources

Mr. Alexander F. Giacco
Chief Executive Officer
Hercules, Incorporated
Hercules Plaza
1313 N. Market Street
Wilmington, DE 19894

Re: Request for Information Pursuant to Section 3007 of the Resource Conservation and Recovery Act, and Section 104 of the Comprehensive Environmental Response, Compensation and Liability Act, as Amended, Pertaining to the Releases of Hazardous Materials from the Hercules, Incorporated Facility in Hattiesburg, Mississippi. MSD 008182081

Dear Mr. Giacco:

The United States Environmental Protection Agency (EPA) is presently investigating the circumstances surrounding the chemical releases of hazardous materials and/or other substances from the above-referenced facility as outlined below:

Release Occurring On or About:	Chemicals Released:
May 19, 1986	Ethylene Oxide
May 31, 1986	Ethylene Oxide
June 4, 1986	Ethylene Oxide
June 16, 1986	Ethylene Oxide
August 25, 1986	Acetone and Toluene

Our investigation concerns the actions that have been taken as a result of the releases and the potential for future releases from the above-referenced facility which may endanger public health or the environment.

We request that you provide us with all information and copies of documents described below. Please be advised that this information is being requested pursuant to the authority of Section 3007 of the Resource Conservation and Recovery Act (RCRA), 42 U.S.C. Section 6927, as amended, and Section 104 of the Comprehensive Environmental Response Compensation and Liability Act (CERCLA), 42 U.S.C. Section 9604, as amended by the Superfund Amendment and Reauthorization Act, P.L. 99-499. To the extent that the release referenced above was a release to or in the air, or any navigable waters, or the environment, this information is also being requested pursuant to the authority of Section 114 of the Clean Air Act, 42 U.S.C. Section 7414, as amended, or Section 308 of the Federal Water Pollution Control Act (also known as the Clean Water Act), 33 U.S.C. Section 1318, as amended, or Section 8 of the Toxic Substances Control Act, 15 U.S.C. Section 2607.

Section 101 of CERCLA as amended, defines release as follows:

> "'release' means any spilling, leaking, pumping, pouring, emitting, emptying, discharging, injecting, escaping, leaching, dumping, or disposing into the environment, (including the abandonment or discarding of barrels, containers, and other closed receptacles containing any hazardous substance or pollutant or contaminant), but excludes (A) any release which results in exposure to persons solely within a workplace, with respect to a claim which such persons may assert against the employer of such persons, (B) emissions from the engine exhaust of a motor vehicle, rolling stock, aircraft, vessel, or pipeline pumping station engine, (C) release of source, byproduct, or special nuclear material from a nuclear incident, as those terms are defined in the Atomic Energy Act of 1954, if such release is subject to requirements with respect to financial protection established by the Nuclear Regulatory Commission under section 170 of such Act, or, for the purposes of section 104 of this title or any other response action, any release of source byproduct, or special nuclear material from any processing site designated under section 102(a)(1) of the Uranium Mill Tailings Radiation Control Act of 1978, and (D) the normal application of fertilizer;"

Section 3007 of RCRA and Section 104 of CERCLA authorize the Administrator of the EPA to require any person who generates, stores, treats, transports, disposes of, or otherwise handles hazardous substances, including hazardous waste, to furnish information related to such substances for the purpose of regulation, enforcement, or determining the need to respond to releases of hazardous substances.

Pursuant to these statutory provisions, you are hereby directed to answer the questions and otherwise provide the information set out in the enclosed "Release Prevention Questionnaire". Some of the questions asked in the questionnaire are asked in order to confirm information received at the time the releases were reported. A separate questionnaire should be submitted for each release. You may reproduce the questionnaire locally, or you may submit a computer printout that provides the requested information in the same format as the questionnaire for each individual release citied in the first paragraph of this letter. Your response should include all information which is in your possession, custody or control, or which is in the possession, custody, or control of any of your employees, officers, agents, contractors, or attorneys. Your response must be sent to EPA within thirty (30) calendar days of your receipt of this letter.

Under Section 3008 of RCRA (42 U.S.C Section 6928), failure to comply with the request for information may result in an order requiring compliance and assessing civil penalties of up to $25,000 per day for each day of non-compliance. You may also be liable for civil penalties under CERCLA, as amended, or, where appropriate, under the Toxic Substances Control Act, the Clean Water Act, or the Clean Air Act. There may also be criminal penalties under CERCLA or RCRA or both for any person who knowingly omits material information, or makes any false material representation, or knowingly destroys, mutilates, erases, disposes of, conceals, or otherwise renders unavailable any records or documents relating to any release.

You are entitled to assert a claim of confidentiality for any information produced that if disclosed to persons other than officers, employees, or duly authorized representatives of the United States concerned with carrying out statutory authority would divulge information entitled to protection under Section 1905 of Title 18 of the United States Code. The information required hereby must be produced notwithstanding its possible characterization as confidential information or trade secrets. Any information entitled to protection as trade secrets will be maintained as confidential pursuant to procedures set forth in 40 Code of Federal Regulations, Part 2, Subpart B. Any request for confidentiality must be made when the information is produced, since any information not so identified cannot be accorded this protection by the Agency and may be made available to the public without further notice.

This request for information is continuing, and to the extent that your responses may be modified as a result of information acquired by you subsequent to your reply, you are requested to promptly supplement your answers reflecting such changes.

Your response should be sent to:

Mr. Henry T. Hudson, Chief
Preparedness and Planning Unit
Emergency Response and Control Section
Waste Management Division
U.S. Environmental Protection Agency
345 Courtland Street, N.E.
Atlanta, Georgia 30365

A copy of each response or portion of a response you make which is not claimed as confidential business information or a trade secret should be sent to:

Colonel Charlie Blalock, Executive Director
Mississippi Department of Natural Resources
P. O. Box 20305
Jackson, MS 39209

If you need further information or have any questions, please contact Mr. Henry Hudson or Ms. Cynthia Peurifoy at 404/347-2216.

Sincerely yours,

Lee A. DeHihns, III, Acting

Jack E. Ravan
Regional Administrator

Enclosure

cc: Mr. Gerald R. Yandle, Plant Manager
Hercules, Incorporated, Hattiesburg, Mississippi

Colonel Charlie Blalock, Executive Director
Mississippi Department of Natural Resources

Mr. Joe Brown, Director
Bureau of Environmental Health, MS State Board of Health

Don W.

HERCULES

Hercules Incorporated
West 7th Street
P.O. Box 1937
Hattiesburg, MS 39401
(601) 545-3450

May 16, 1986

RECEIVED
MAY 19 1986
DEPT. OF NATURAL RESOURCE
BUREAU OF POLLUTION CONTROL

Mr. Dwight K. Wylie, P.E. Chief
Air Division
Bureau of Pollution Control
P. O. Box 10385
Jackson, Mississippi 39209

Dear Mr. Wylie:

In reference to Operating Permit No. 0800-0001, please find the attached monthly reports detailing the compliance status of the boilers for emission points 009 and 010.

Very truly yours,

Charles S. Jordan

Charles S. Jordan
Environmental Supervisor

CSJ/sj
0687C

Attachments

5/14/86

To: C. S. Jordan

From: L. C. Polk

Operating Permit No. 00800-00001 Hattiesburg, MS
Issued For The Operation of Air Emissions Equipment

In reference to the above permit, Part III, Other Requirements, 1-C,the following monthly report is for APRIL, 1986.

The report details the complaince status of the boilers with copies of all visible emissions evaluations in which <u>any</u> reading exceeds 40% opacity.

Total number of VEE copies attached = 7.

In addition, copies of log sheets are attached for all visible emission evaluations when opacity exceeds 40% for two minutes or more.

Number of log sheets attached = 4.

L. C. Polk

Visible Emissions Evaluation Record

Plant Name: Hercules Inc

Address: West 7th Street

City: Hattiesburg

Emission Point: 010

Date: 4-10-86

Is emission point operation normal ? _____

V. E. Observer: Howard Dunnell ~~Bobbie Draughon~~

Certification Expiration: 4-24-86

Set No.	Time Start	Time End	Opacity Sum	Opacity Average
1	12:10 PM	12:16 PM	875	36.5
2	12:16 PM	12:22 PM	870	36.3
3	12:22 PM	12:28 PM	795	33.1

Overall Average: 35.3

	Initial	Final
Distance to discharge	2 Lengths	
Direction to discharge	N	
Height of observation point	Ground	
Height of discharge	225 feet	
Plume color	BROWN	
Plume background	White	
Water vapor in plume ?		
Wind direction (from)	West	
Wind speed	5 MPH	
Ambient temperature	70° F	
Discharge temperature		
Sky conditions	Cloudy	

Min.	Seconds 0	15	30	45
0	30	30	30	30
1	35	35	35	35
2	40	40	40	40
3	35	35	30	30
4	30	30	50	50
5	50	50	40	25
0	25	25	20	20
1	25	25	25	25
2	30	30	45	40
3	40	45	50	50
4	45	40	45	50
5	45	40	45	40
0	40	45	30	25
1	25	25	25	30
2	30	30	30	30
3	30	35	35	35
4	40	35	35	35
5	35	40	40	35

Diagram Of Observation/Discharge Point

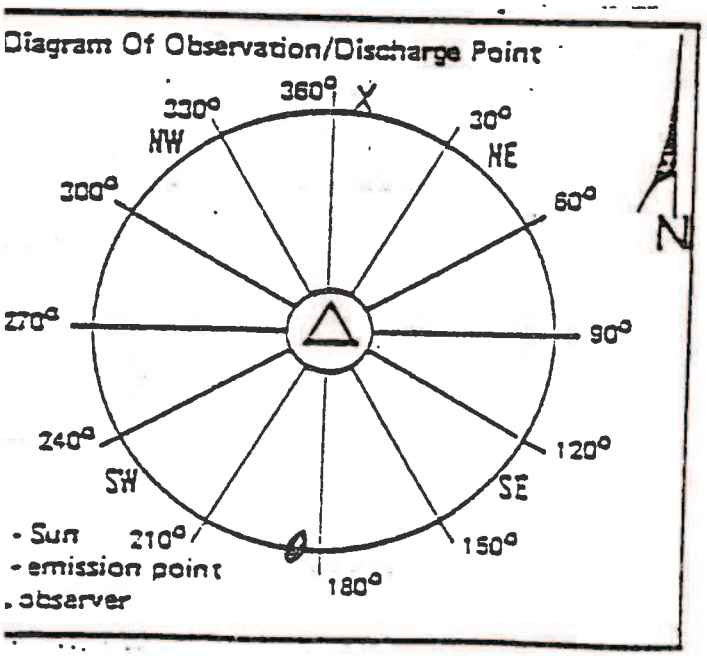

SET NO.	REMARKS
1	
2	
3	

Received By: _____

Visible Emissions Evaluation Recor

Plant Name: Hercules Inc.

Address: West 7th Street

City: Hattiesburg

Emission Point: 009

Date: 4-7-86

Is emission point operation normal ? _____

V. E. Observer: ~~Bobbie Douglas~~ Howard Dunnall

Certification Expiration: 4-24-86

Set No.	Time Start	Time End	Opacity Sum	Opacity Average
1	10:25 Am	10:31 Am	565	24.0
2	10:31 Am	10:37 Am	120	5
3	10:37 Am	10:43 Am	305	12.7

Overall Average: 21.9

	Initial	Final
Distance to discharge	2 Lengths	
Direction to discharge	N	
Height of observation point	Ground	
Height of discharge	200 feet	
Plume color	BLACK	
Plume background	BLUE	
Water vapor in plume ?		
Wind direction (from)	WEST	
Wind speed	5 MPH	
Ambient temperature		
Discharge temperature		
Sky conditions	Clear	

Diagram Of Observation/Discharge Point

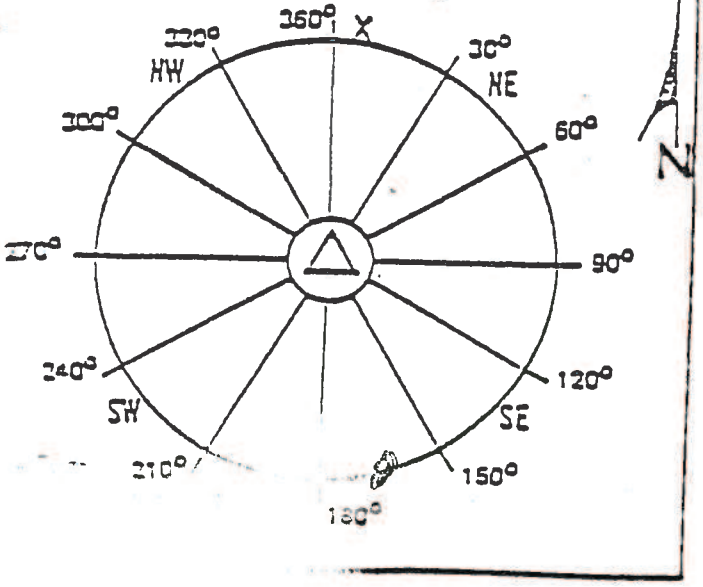

Min.	Second: 0	15	30	45
0	20	20	25	35
1	45	45	50	35
2	30	30	30	30
3	20	15	15	20
4	15	15	15	15
5	10	10	10	10
0	5	5	5	5
1	5	5	5	5
2	5	5	5	5
3	5	5	5	5
4	5	5	5	5
5	5	5	5	5
0	5	5	5	5
1	5	5	5	5
2	5	5	5	5
3	5	5	5	5
4	15	20	25	25
5	35	35	35	35

SET NO.	REMARKS
1	
2	
3	

Received By: _____

Visible Emissions Evaluation Record

Plant Name: Hercules Inc.

Address: West 7th Street

City: Hattiesburg

Emission Point: 010

Date: 4-2-86

Is emission point operation normal? _____

V. E. Observer: Bobbie Draughn

Certification Expiration: 4-24-86

Set No.	Time		Opacity	
	Start	End	Sum	Average
1	100	106	230	9.6
2	106	112	530	22.1
3	112	118	305	12.7

Overall Average: 14.8

	Initial	Final
Distance to discharge	2 Lengths	
Direction to discharge	N	
Height of observation point	Ground	
Height of discharge	225 feet	
Plume color	Grey	
Plume background	Blue Sky	
Water vapor in plume?		
Wind direction (from)	SE	
Wind speed	5 mph	
Ambient temperature	82°	
Discharge temperature		
Sky conditions	PC	

Min.	Seconds 0	15	30	45
0	10	10	10	10
1	10	10	10	10
2	5	5	10	10
3	10	15	15	10
4	10	10	5	5
5	10	10	10	10
0	10	10	10	10
1	10	15	15	25
2	25	25	40	40
3	50	70	50	40
4	15	15	10	10
5	10	10	10	5
0	10	10	10	10
1	10	10	15	15
2	15	15	15	15
3	15	15	10	15
4	20	20	15	15
5	10	10	5	5

Diagram Of Observation/Discharge Point

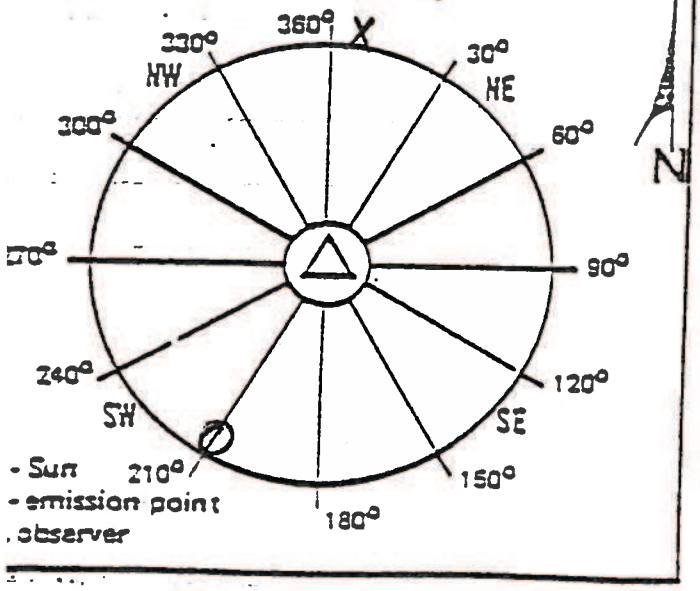

SET NO.	REMARKS
1	
2	
3	

Received By: _____

Pdlp

Bureau of Pollution Control
Visible Emissions Evaluation Record

Carroll Hawkins

Plant Name: Hercules Inc

V. E. Observer: Bobbie Draughn

Address: West 7th Street

Certification Expiration: 4-24-86 (2-

City: Hattiesburg

Emission Point: 010

Date: 4-30-86

Is emission point operation normal ? _____

	Initial	Final
Distance to discharge	2 Lengths	
Direction to discharge	N	
Height of observation point	Ground	
Height of discharge	225 feet	
Plume color	White	
Plume background	Grey	
Water vapor in plume ?		
Wind direction (from)	South	
Wind speed	10 mPH	
Ambient temperature	90°	
Discharge temperature		
Sky conditions	P.C.	

Set No.	Time		Opacity	
	Start	End	Sum	Average
1	1 10 Pm	1 21 Pm	1065	44.4
2	1 21 Pm	1 27 Pm	800	33.3
3	1 27 Pm	1 33 Pm	1055	44.0

Overall Average: 40.6

Min.	Seconds 0	15	30	45
0	40	40	35	35
1	35	40	40	30
2	30	35	40	50
3	50	50	50	50
4	50	50	50	45
5	60	55	60	50
0	50	45	45	40
1	40	40	40	40
2	30	30	30	30
3	30	25	30	35
4	30	30	35	30
5	25	25	20	25
0	30	30	30	35
1	35	40	45	45
2	45	45	45	45
3	50	45	35	40
4	45	45	50	50
5	40	40	40	40

Diagram Of Observation/Discharge Point

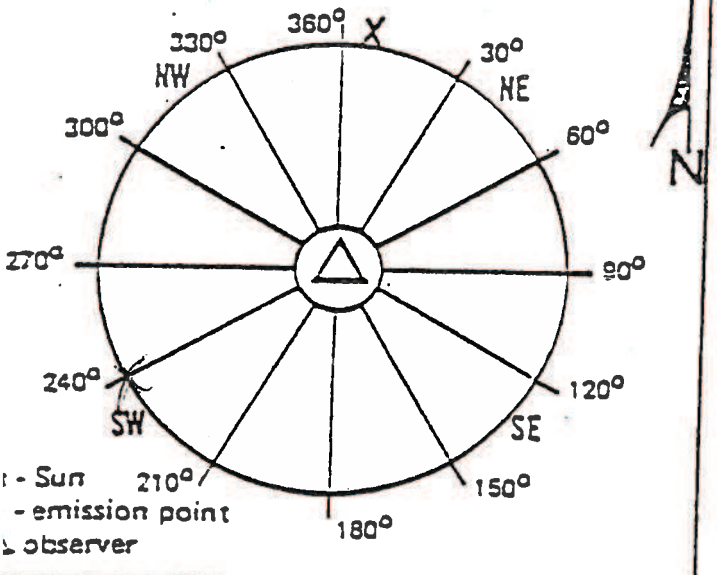

SET NO.	REMARKS
1	
2	
3	

Received By: _____

Ref Larry

Bureau of Pollution Control
Visible Emissions Evaluation Record

Plant Name: Hercules Inc.
Address: West 7th Street
City: Hattiesburg
Emission Point: 009
Date: 4-16-86
Is emission point operation normal ?

V. E. Observer: Howard Dunnall ~~Bobbie Douglas~~
Certification Expiration: 4-24-86

Set No.	Time Start	Time End	Opacity Sum	Opacity Average
1	12:38 Pm	12:44 Pm	500	20.8
2	12:44 Pm	12:50 Pm	620	25.8
3	12:50 Pm	12:56 Pm	1255	52.3

Overall Average: 33.0

	Initial	Final
Distance to discharge	2 Lengths	
Direction to discharge	N	
Height of observation point	Ground	
Height of discharge	200 feet	
Plume color	Brown	
Plume background	Blue	
Water vapor in plume ?		
Wind direction (from)	N.W.	
Wind speed	5 MPH	
Ambient temperature	60°F	
Discharge temperature		
Sky conditions	Clear	

Min.	Seconds 0	15	30	45
0	15	15	15	15
1	20	20	25	25
2	25	25	25	25
3	20	20	25	25
4	20	20	20	20
5	20	20	20	20
0	20	20	20	20
1	20	20	20	20
2	20	20	25	25
3	25	25	35	35
4	30	30	30	30
5	30	30	30	40
0	40	40	40	35
1	35	35	45	50
2	50	45	45	45
3	50	50	50	55
4	60	75	75	70
5	60	60	70	75

Diagram Of Observation/Discharge Point

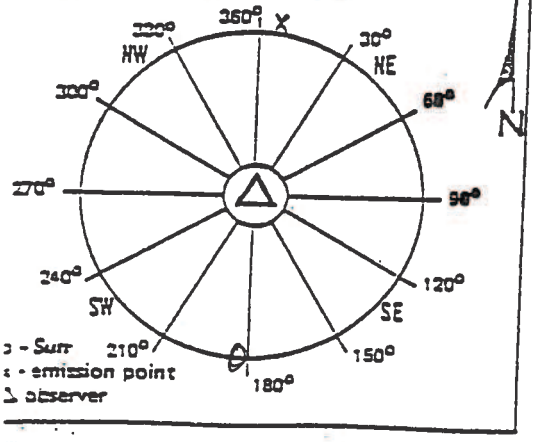

SET NO.	REMARKS
1	
2	
3	

Received By: _____

Bureau of Pollution Control
Visible Emissions Evaluation Record

Plant Name: Hercules Inc.

Address: West 7th Street

City: Hattiesburg

Emission Point: 009

Date: 4-4-86

Is emission point operation normal ? _____

V. E. Observer: Rod

Certification Expiration: 86

Set No.	Time		Opacity	
	Start	End	Sum	Average
1	1145	1151	245	10.2
2	1151	1157	1125	46.9
3	1157	1203	690	28.8

Overall Average: 28.6

	Initial	Final
Distance to discharge	2 Lengths	
Direction to discharge	N	
Height of observation point	Ground	
Height of discharge	200 feet	
Plume color	Gray	
Plume background	Gray	Sky
Water vapor in plume ?		
Wind direction (from)	SE	
Wind speed	10-15 mph	
Ambient temperature	85°	
Discharge temperature		
Sky conditions	PC	

Diagram Of Observation/Discharge Point

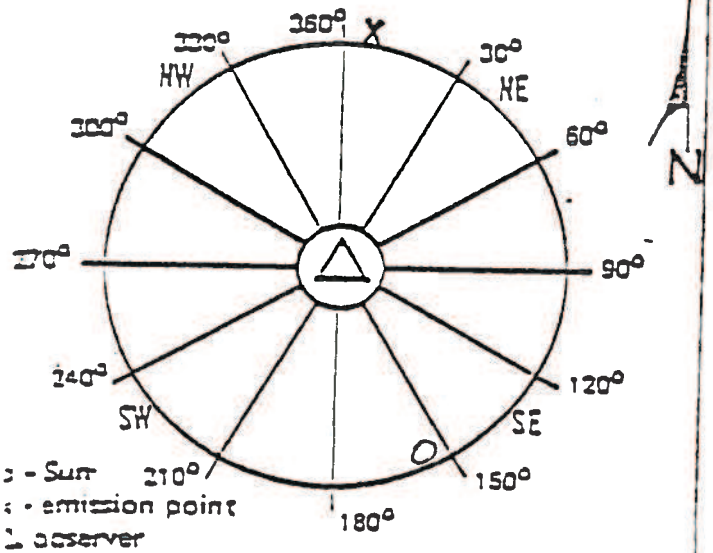

X - Sun
O - emission point
Δ - observer

Min.	Seconds 0	15	30	45
0	10	5	10	10
1	15	15	15	15
2	15	15	10	10
3	5	5	5	5
4	10	10	10	10
5	10	10	10	10
0	10	10	10	10
1	10	10	10	10
2	50	50	60	60
3	60	60	60	70
4	50	60	60	60
5	75	90	90	90
0	70	70	70	70
1	75	80	60	60
2	30	15	5	5
3	5	5	5	5
4	5	5	10	10
5	10	10	10	10

SET NO.	REMARKS
1	
2	
3	

Received By: _____

Bureau of Pollution Control

Visible Emissions Evaluation Record

Plant Name: Hercules Inc

Address: West 7th Street

City: Hattiesburg

Emission Point: 010

Date: 4-3-86

Is emission point operation normal ? _____

V. E. Observer: Bobbie Draughn

Certification Expiration: 4-24-86

Set No.	Time		Opacity	
	Start	End	Sum	Average
1	8^{32}	8^{38}	1970	82.1
2	8^{38}	8^{44}	885	36.9
3	8^{44}	8^{50}	1120	46.7

Overall Average: 55.2

	Initial	Final
Distance to discharge	2 Lengths	
Direction to discharge	N	
Height of observation point	Ground	
Height of discharge	225 feet	
Plume color	Gray	
Plume background	Blue Sky	
Water vapor in plume ?		
Wind direction (from)	SE	
Wind speed	10 mph	
Ambient temperature	70°	
Discharge temperature		
Sky conditions	PC	

Diagram Of Observation/Discharge Point

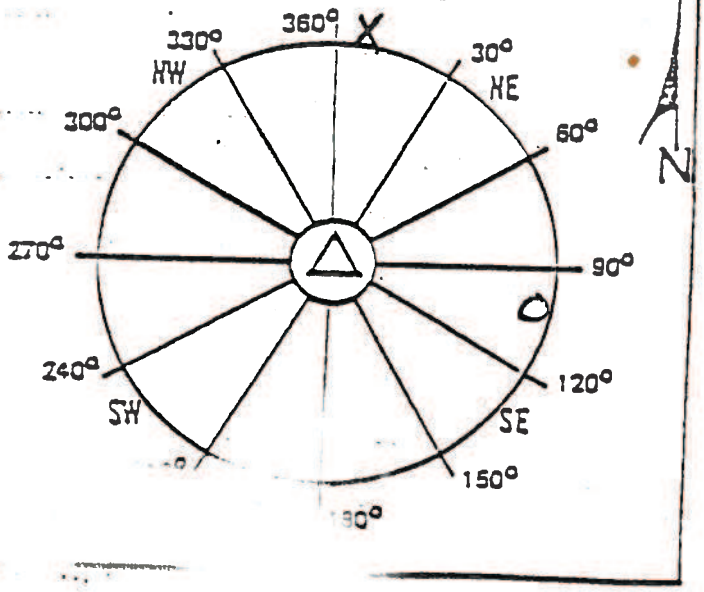

Min.	Seconds 0	15	30	45
0	100	100	100	100
1	100	100	100	100
2	100	100	100	100
3	100	100	100	60
4	40	30	40	60
5	100	70	40	30
0	30	30	25	30
1	30	30	25	25
2	20	20	25	25
3	30	50	50	30
4	50	50	60	60
5	60	50	40	40
0	40	50	50	40
1	40	40	40	40
2	30	30	35	30
3	40	40	60	80
4	70	60	60	75
5	50	50	40	30

SET NO.	REMARKS
1	
2	
3	

Received By: _____

S-663

DATE 4 - 4 - [illegible]

BOILER ROOM ENVIRONMENTAL LOG SHEET

Cleaned Fires		7 - 3 Shift	3 - 11 Shift	11 - 7 Shift
No. 1 Boiler	Started	6:45	7:10	1:[illegible]
	Stopped	8:45	9:05	[illegible]
No. 2 Boiler	Started			
	Stopped			
No. 3 Boiler	Started			
	Stopped			
No. 4 Boiler	Started		3:15	1[illegible]
	Stopped		[illegible]	

Comments on Boiler Operation

OPACITY EVALUATION - WOOD BURNING BOILERS

BOILER NO. 1			BOILER NO. 2			BOILER NO. 3			BOILER NO. 4		
Time	Duration	Note	Time	Duration	Note	Time	Duration	Note	Time	Duration	Note

1. Cleaning Boil
2. Fuel Oil Adjustment
3. Load Changes
4. Meter Defect
5. Cleaning Mete Lenses

COMMENTS ON OPACITY & METER OPERATION

S-663

DATE 11 - [illegible]

BOILER ROOM ENVIRONMENTAL LOG SHEET

Cleaned Fires		7 - 3 Shift	3 - 11 Shift	11 - Shift
No. 1 Boiler	Started	9:00	3:45	10:[illegible]
	Stopped	10:15	6:15	
No. 2 Boiler	Started			
	Stopped			
No. 3 Boiler	Started			
	Stopped			
No. 4 Boiler	Started	7:00	3:30	12:[illegible]
	Stopped	7:30	5:00	

Comments on Boiler Operation

OPACITY EVALUATION - WOOD BURNING BOILERS

BOILER NO. 1			BOILER NO. 2			BOILER NO. 3			BOILER NO. 4			
Time	Duration	Note	Time	Duration	Note	Time	Duration	Note	Time	Duration	Note	1.Cleaning Bo
												2.Fuel Oil Adjustment
												3.Load Change
												4.Meter Defec
												5.Cleaning Me Lenses

COMMENTS ON OPACITY & METER OPERATION

S-663

DATE 4-16-86

BOILER ROOM ENVIRONMENTAL LOG SHEET

Cleaned Fires		7 - 3 Shift	3 - 11 Shift	11 - 7 Shift
No. 1 Boiler	Started	9:40	7:15	11:30
	Stopped	11:45	8:15	12:35
No. 2 Boiler	Started			
	Stopped			
No. 3 Boiler	Started			
	Stopped			
No. 4 Boiler	Started	7:30	3:15	11:45
	Stopped	8:15	5:45	5:55

Comments on Boiler Operation

OPACITY EVALUATION - WOOD BURNING BOILERS

BOILER NO. 1			BOILER NO. 2			BOILER NO. 3			BOILER NO. 4			
Time	Duration	Note	Time	Duration	Note	Time	Duration	Note	Time	Duration	Note	1.Cleaning Boile
												2.Fuel Oil Adjustment
												3.Load Changes
												4.Meter Defect
												5.Cleaning Meter Lenses

COMMENTS ON OPACITY & METER OPERATION

S-663

DATE 4-30-86

BOILER ROOM ENVIRONMENTAL LOG SHEET

Cleaned Fires		7 - 3 Shift	3 - 11 Shift	11 - 7 Shift
No. 1 Boiler	Started	7:00	5:30	10 4
	Stopped	7:20	6:00	1
No. 2 Boiler	Started			
	Stopped			
No. 3 Boiler	Started			
	Stopped			
No. 4 Boiler	Started	9:00	3:05	12
	Stopped	11:20	11:35	

Comments on Boiler Operation

OPACITY EVALUATION - WOOD BURNING BOILERS

BOILER NO. 1			BOILER NO. 2			BOILER NO. 3			BOILER NO. 4		
Time	Duration	Note	Time	Duration	Note	Time	Duration	Note	Time	Duration	Note

1. Cleaning Bo
2. Fuel Oil Adjustment
3. Load Change
4. Meter Defec
5. Cleaning Me Lenses

COMMENTS ON OPACITY & METER OPERATION

5/14/86

To: C. S. Jordan

From: L. C. Polk

Operating Permit No. 00800-00001 Hattiesburg, MS
Issued For The Operation of Air Emissions Equipment

In reference to the above permit, Part III, Other Requirements, 1-C, the following monthly report is for MAY, 1986.

The report details the complaince status of the boilers with copies of all visible emissions evaluations in which <u>any</u> reading exceeds 40% opacity.

Total number of VEE copies attached = 2.

In addition, copies of log sheets are attached for all visible emission evaluations when opacity exceeds 40% for two minutes or more.

Number of log sheets attached = 0.

L. C. Polk

pit

Bureau of Pollution Control
Visible Emissions Evaluation Record

Plant Name: Hercules Inc

Address: West 7th Street

City: Hattiesburg

Emission Point: 010

Date: 5-9-86

Is emission point operation normal ?

V. E. Observer: Bobb

Certification Expiration: 4 -86 12-17-0

Set No.	Time Start	Time End	Opacity Sum	Opacity Average
1	1 10 Pm	1 21 Pm	425	17.5
2	1 21 Pm	1 27 Pm	820	34.
3	1 27 Pm	1 32 Pm	120	5.0

Overall Average: 18.9

	Initial	Final
Distance to discharge	2 Lengths	
Direction to discharge	N	
Height of observation point	Ground	
Height of discharge	225 feet	
Plume color	White	
Plume background	Gray	
Water vapor in plume ?		
Wind direction (from)	SW	
Wind speed	5 MPH	
Ambient temperature	90°	
Discharge temperature		
Sky conditions	Pt.	

Diagram Of Observation/Discharge Point

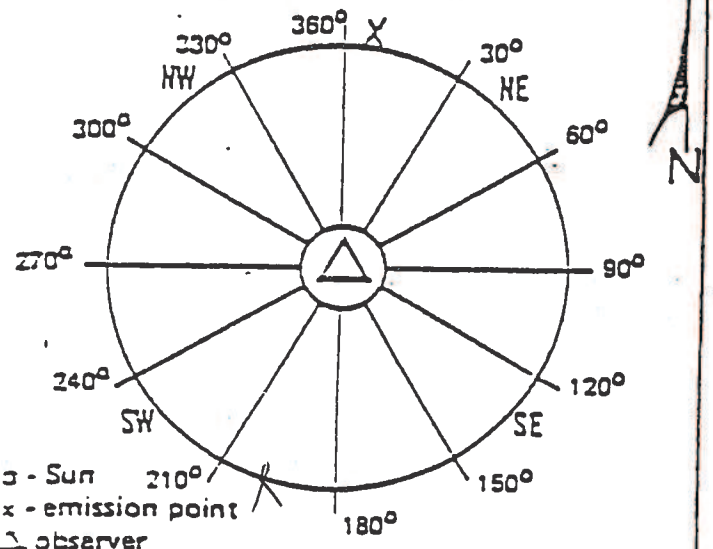

Min.	Seconds 0	15	30	45
0	5	5	5	5
1	5	5	5	10
2	15	15	20	20
3	15	20	20	20
4	25	25	25	30
5	35	30	30	30
0	25	25	25	20
1	30	35	35	35
2	55	55	70	75
3	75	60	55	50
4	30	15	10	10
5	10	15	15	10
0	5	5	5	5
1	5	5	5	5
2	5	5	5	5
3	5	5	5	5
4	5	5	5	5
5	5	5	5	5

SET NO.	REMARKS
1	
2	
3	

Received By:

Pol

Bureau of Pollution Control

Visible Emissions Evaluation Record

Plant Name: Hercules Inc

Address: West 7th Street

City: Hattiesburg

Emission Point: 010

Date: 5-12-86

Is emission point operation normal ? _____

V. E. Observer: [illegible]

Certification Expiration: [illegible]

Set No.	Time Start	Time End	Opacity Sum	Opacity Average
1	1 45 Pm	1 57 Pm	1085	45.2
2	1 57 Pm	1 57 Pm	1225	53.1
3	1 57 Pm	2 03 Pm	1425	59.1

Overall Average: 52.6

	Initial	Final
Distance to discharge	2 Lengths	
Direction to discharge	N	
Height of observation point	Ground	
Height of discharge	225 feet	
Plume color	White	
Plume background	Gray	
Water vapor in plume ?		
Wind direction (from)	S-E	
Wind speed	5 MPH	
Ambient temperature	86°	
Discharge temperature		
Sky conditions	P-C	

Min.	Seconds 0	15	30	45
0	40	40	45	50
1	50	30	35	30
2	30	25	20	25
3	30	35	45	50
4	60	60	65	65
5	65	60	60	70
0	60	55	50	50
1	60	70	70	65
2	55	40	25	25
3	25	35	35	40
4	50	60	65	65
5	70	70	65	70
0	65	65	70	65
1	55	50	50	45
2	55	55	50	55
3	50	50	50	55
4	60	65	65	65
5	70	75	75	70

Diagram Of Observation/Discharge Point

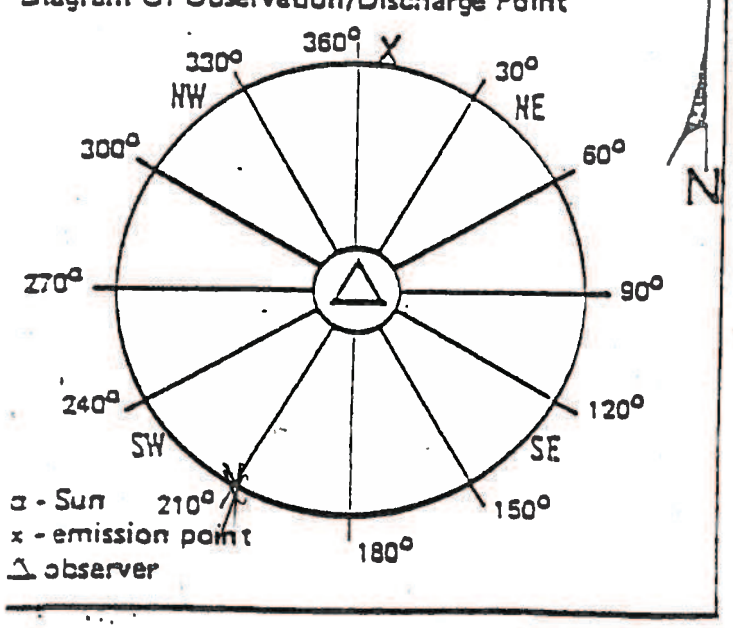

SET NO.	REMARKS
1	
2	
3	

Received By: _____

HERCULES

Hercules Incorporated
West 7th Street
P.O. Box 1937
Hattiesburg, MS 39401
(601) 545-3450

March 4, 1986

RECEIVED
MAR 5 1986
DEPT. OF NATURAL RESOURCE
BUREAU OF POLLUTION CONTROL

Mr. Dwight K. Wylie, P.E. Chief
Air Division
Bureau of Pollution Control
P. O. Box 10385
Jackson, Mississippi 39209

Dear Mr. Wylie:

In reference to Operating Permit No. 0800-0001, please find the attached monthly reports detailing the compliance status of the boilers for emission points 009 and 010.

We will continue to submit this report on a monthly basis.

Very truly yours,

Charles S. Jordan

Charles S. Jordan
Environmental Supervisor

CSJ/de
0529L

Attachments

3/03/86

To: C. S. Jordan

From: L. C. Polk

Operating Permit No. 00800-00001 Hattiesburg, MS
Issued For The Operation of Air Emissions Equipment

In reference to the above permit, Part III, Other Requirements, 1-C, the following monthly report is for February, 1986.

The report details the complaince status of the boilers with copies of all visible emissions evaluations in which <u>any</u> reading exceeds 40% opacity.

Total number of VEE copies attached = 5.

In addition, copies of log sheets are attached for all visible emission evaluations when opacity exceeds 40% for two minutes or more.

Number of log sheets attached = 3.

L. C. Polk

DATE

BOILER ROOM ENVIRONMENTAL LOG SHEET

Cleaned Fires		7 - 3 Shift	3 - 11 Shift	11 - Shif
No. 1 Boiler	Started			
	Stopped			
No. 2 Boiler	Started			
	Stopped			
No. 3 Boiler	Started			
	Stopped			
No. 4 Boiler	Started			
	Stopped			

Comments on Boiler Operation

OPACITY EVALUATION - WOOD BURNING BOILERS

BOILER NO. 1			BOILER NO. 2			BOILER NO. 3			BOILER NO. 4		
Time	Duration	Note	Time	Duration	Note	Time	Duration	Note	Time	Duration	Note

1.Cleaning E
2.Fuel Oil Adjustment
3.Load Chang
4.Meter Defe
5.Cleaning M Lenses
6. Wood

COMMENTS ON OPACITY & METER OPERATION

DATE _____

BOILER ROOM ENVIRONMENTAL LOG SHEET

Cleaned Fires		7 - 3 Shift	3 - 11 Shift	11 - Shift
No. 1 Boiler	Started			
	Stopped			
No. 2 Boiler	Started			
	Stopped			
No. 3 Boiler	Started			
	Stopped			
No. 4 Boiler	Started			
	Stopped			

Comments on Boiler Operation

OPACITY EVALUATION - WOOD BURNING BOILERS

BOILER NO. 1			BOILER NO. 2			BOILER NO. 3			BOILER NO. 4			
Time	Duration	Note	Time	Duration	Note	Time	Duration	Note	Time	Duration	Note	1.Cleaning
												2.Fuel Oil Adjustmen
												3.Load Chan
												4.Meter Def
												5.Cleaning Lenses
												6. Wood

COMMENTS ON OPACITY & METER OPERATION _____

DATE _____

BOILER ROOM ENVIRONMENTAL LOG SHEET

Cleaned Fires		7 - 3 Shift	3 - 11 Shift	11 Shi
No. 1 Boiler	Started			
	Stopped			
No. 2 Boiler	Started			
	Stopped			
No. 3 Boiler	Started			
	Stopped			
No. 4 Boiler	Started	7:20	3:00	
	Stopped		5:30	

Comments on Boiler Operation

OPACITY EVALUATION - WOOD BURNING BOILERS

BOILER NO. 1			BOILER NO. 2			BOILER NO. 3			BOILER NO. 4		
Time	Duration	Note	Time	Duration	Note	Time	Duration	Note	Time	Duration	Note

1. Cleaning
2. Fuel Oil Adjustmer
3. Load Char
4. Meter Def
5. Cleaning Lenses
6. Wood

COMMENTS ON OPACITY & METER OPERATION _____

Bureau of Pollution Control

ble Emissions Evaluation Record

S. Polk

Plant Name: Hercules Inc.

Address: West 7th Street

City: Hattiesburg

Emission Point: 010

Date: 2-27-86

Is emission point operation normal ? _____

V. E. Observer: Bobbie Draughn

Certification Expiration: 4-24-86

Set No.	Time		Opacity	
	Start	End	Sum	Average
1	12^{04}	12^{10}	515	21.5
2	12^{10}	12^{16}	380	15.8
3	12^{16}	12^{22}	1550	64.6

Overall Average: 34.0

	Initial	Final
Distance to discharge	2 Lengths	
Direction to discharge	N	
Height of observation point	Ground	
Height of discharge	225 feet	
Plume color	Gray	
Plume background	Gray Sky	
Water vapor in plume ?		
Wind direction (from)	NW	
Wind speed	10 mph	
Ambient temperature	67°	
Discharge temperature		
Sky conditions	Cloudy	

	Seconds			
Min.	0	15	30	45
0	10	10	10	10
1	10	10	15	20
2	40	80	60	40
3	60	40	10	10
4	10	10	10	10
5	10	10	10	10
0	10	10	10	10
1	10	15	15	20
2	10	10	25	30
3	25	25	15	15
4	20	25	20	20
5	10	10	10	10
0	10	10	10	10
1	30	20	10	20
2	30	40	60	100
3	100	100	100	100
4	100	100	100	100
5	100	100	100	100

Diagram Of Observation/Discharge Point

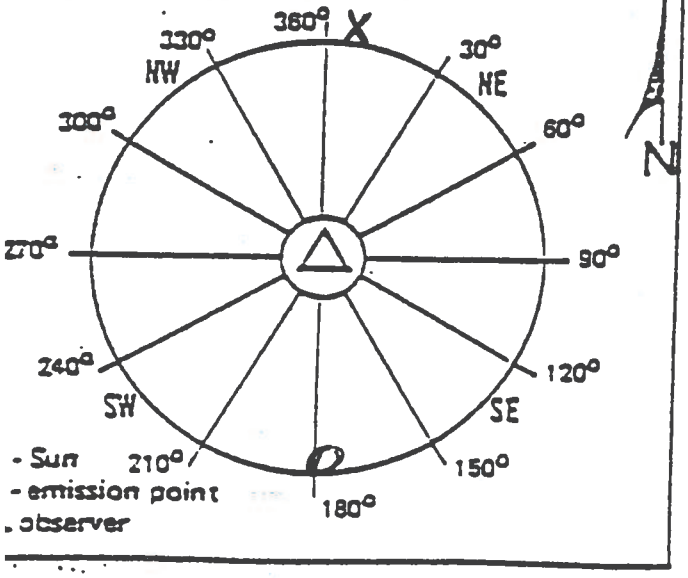

SET NO.	REMARKS
1	
2	
3	

Received By: _____

Visible Emissions Evaluation Record — S. Yoke

Plant Name: Hercules Inc.

Address: West 7th Street

City: Hattiesburg

Emission Point: 010

Date: 2-21-86

Is emission point operation normal? ____

V. E. Observer: Bobbie Draughon

Certification Expiration: 4-24-86

Set No.	Time		Opacity	
	Start	End	Sum	Average
1	1103	1109	1300	54.2
2	1109	1115	455	19.0
3	1115	1121	280	11.7

Overall Average: 28.3

	Initial	Final
Distance to discharge	2 Lengths	
Direction to discharge	N	
Height of observation point	Ground	
Height of discharge	225 feet	
Plume color	Gray	
Plume background	Gray Sky	
Water vapor in plume?		
Wind direction (from)	W	
Wind speed	5 mph	
Ambient temperature	68°	
Discharge temperature		
Sky conditions	Cloudy	

Diagram Of Observation/Discharge Point

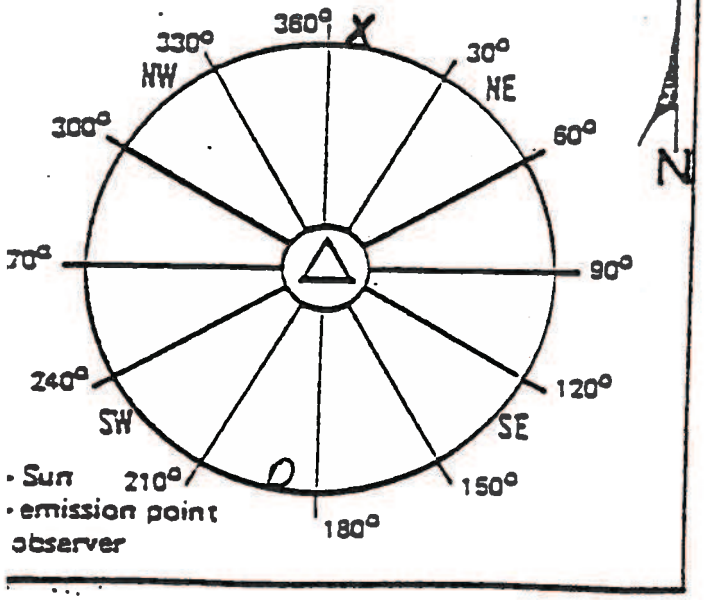

Min.	Seconds 0	15	30	45
0	30	30	30	30
1	25	15	15	15
2	20	25	25	25
3	55	60	60	70
4	70	100	100	100
5	100	100	100	100
0	70	60	50	50
1	40	40	10	10
2	5	5	5	5
3	5	5	5	10
4	10	10	10	10
5	10	10	10	10
0	10	10	10	10
1	5	5	10	10
2	10	10	10	10
3	10	10	15	15
4	15	15	15	15
5	15	15	15	15

SET NO.	REMARKS
1	
2	
3	

Received By: ____

Bureau of Pollution Control
Visible Emissions Evaluation Record

Plant Name: Hercules Inc
Address: West 7th Street
City: Hattiesburg
Emission Point: 010
Date: 2-11-86
Is emission point operation normal ?

V. E. Observer: Bobbie Draughn
Certification Expiration: 4-24-86

	Initial	Final
Distance to discharge	2 Lengths	
Direction to discharge	N	
Height of observation point	Ground	
Height of discharge	225 feet	
Plume color	Gray	
Plume background	Gray Sky	
Water vapor in plume ?		
Wind direction (from)	W	
Wind speed	15 mph	
Ambient temperature	34°	
Discharge temperature		
Sky conditions	Pc	

Set No.	Time Start	Time End	Opacity Sum	Opacity Average
1	200	206	630	26.3
2	206	212	1110	46.3
3	212	218	675	28.1

Overall Average: 33.6

Min.	Seconds 0	15	30	45
0	40	40	40	25
1	25	25	25	30
2	30	30	30	30
3	25	25	20	20
4	20	20	20	20
5	20	20	25	25
0	40	40	35	35
1	35	35	35	35
2	30	30	25	25
3	25	25	40	40
4	60	90	80	80
5	90	60	60	60
0	50	50	30	30
1	25	25	30	30
2	25	25	25	25
3	30	30	25	25
4	25	25	20	25
5	25	25	25	25

Diagram Of Observation/Discharge Point

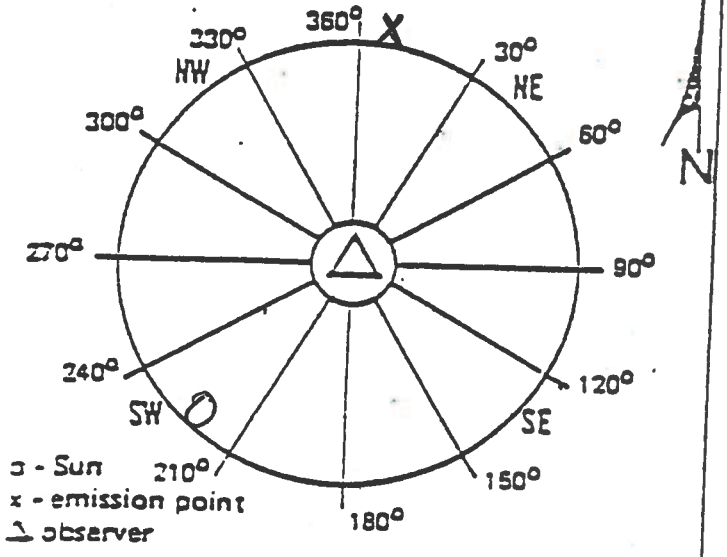

SET NO.	REMARKS
1	
2	
3	

Received By:

Bureau of Pollution Control
Visible Emissions Evaluation Record

S. Polk

Plant Name: Hercules Inc.

Address: West 7th Street

City: Hattiesburg

Emission Point: 009

Date: 2-13-86

Is emission point operation normal ? _____

V. E. Observer: Bobbie Draughn

Certification Expiration: 4-24-86

Set No.	Time		Opacity	
	Start	End	Sum	Average
1	10[00]	10[06]	590	24.6
2	10[06]	10[12]	595	24.8
3	10[12]	10[18]	730	30.4

Overall Average: 26.6

	Initial	Final
Distance to discharge	2 Lengths	
Direction to discharge	N	
Height of observation point	Ground	
Height of discharge	200 feet	
Plume color	Gray	
Plume background	Blue Sky	
Water vapor in plume ?		
Wind direction (from)	SE	
Wind speed	10-15 mph	
Ambient temperature	36°	
Discharge temperature		
Sky conditions	Clear	

Diagram Of Observation/Discharge Point

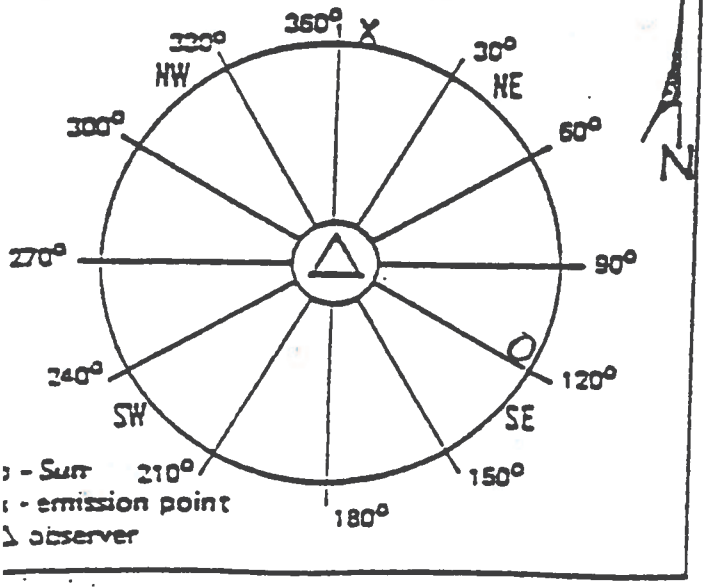

Min.	Seconds 0	15	30	45
0	20	25	25	20
1	25	25	25	25
2	25	25	25	25
3	25	25	25	25
4	25	25	25	25
5	25	25	25	25
0	25	25	25	25
1	25	25	25	25
2	25	25	25	25
3	25	25	25	25
4	25	25	25	25
5	25	25	25	20
0	20	20	20	20
1	20	20	20	20
2	20	20	20	30
3	30	30	30	30
4	35	35	45	50
5	50	50	45	50

SET NO.	REMARKS
1	
2	
3	

Received By: _____

Bureau of Pollution Control
Visible Emissions Evaluation Record — S. Polk

Plant Name: Hercules Inc.
Address: West 7th Street
City: Hattiesburg
Emission Point: 009
Date: 2-11-86
Is emission point operation normal ?

V. E. Observer: Bobbie Draught
Certification Expiration: 4-24-86

Set No.	Time Start	Time End	Opacity Sum	Opacity Average
1	2^00	2^06	680	28.3
2	2^06	2^12	865	36.0
3	2^12	2^18	870	36.3

Overall Average: 33.5

	Initial	Final
Distance to discharge	2 Lengths	
Direction to discharge	N	
Height of observation point	Ground	
Height of discharge	200 feet	
Plume color	Gray	
Plume background	Gray Sky	
Water vapor in plume ?		
Wind direction (from)	W	
Wind speed	15 mph	
Ambient temperature	34°	
Discharge temperature		
Sky conditions	Pc	

Min.	Seconds 0	15	30	45
0	25	20	20	35
1	30	30	25	25
2	30	30	30	30
3	30	30	30	30
4	30	30	25	25
5	30	30	30	30
0	30	30	25	25
1	25	30	25	25
2	35	35	40	40
3	50	50	30	30
4	30	40	50	50
5	50	40	40	40
0	50	50	40	40
1	30	30	30	30
2	25	25	30	30
3	40	40	40	40
4	30	40	30	30
5	25	25	50	70

Diagram Of Observation/Discharge Point

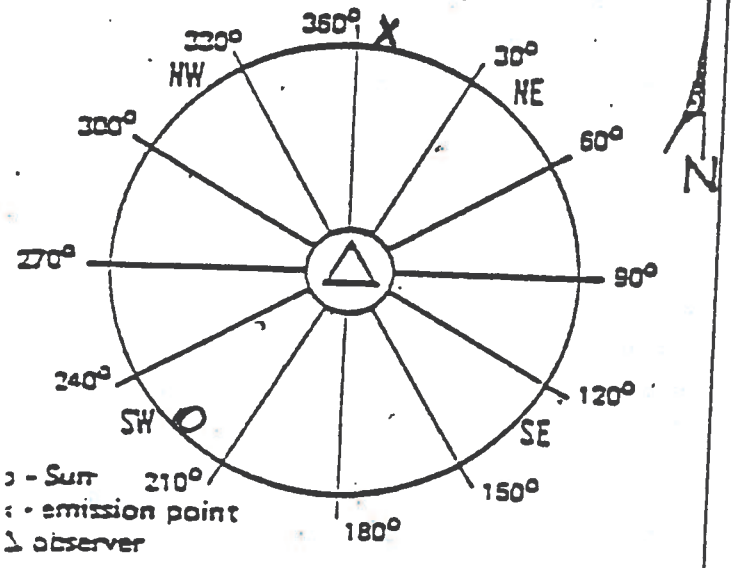

SET NO.	REMARKS
1	
2	
3	

Received By:

Hercules Incorporated
West 7th Street
P.O. Box 1937
Hattiesburg, MS 39401
(601) 545-3450

February 17, 1986

RECEIVED
FEB 18 1986
DEPT. OF NATURAL RESOURCE
BUREAU OF POLLUTION CONTROL

Mr. Dwight K. Wylie, P.E. Chief
Air Division
Bureau of Pollution Control
P. O. Box 10385
Jackson, Mississippi 39209

Dear Mr. Wylie:

In reference to Operating Permit No. 0800-0001, please find the attached monthly reports detailing the compliance status of the boilers for emission points 009 and 010.

We will continue to submit this report on a monthly basis.

Very truly yours,

C S Jordan

Charles S. Jordan
Environmental Supervisor

CSJ/de
0529L

Attachments

2/17/86

To: C. S. Jordan

From: L. C. Polk

Operating Permit No. 00800-00001 Hattiesburg, MS
Issued For The Operation of Air Emissions Equipment

In reference to the above permit, Part III, Other Requirements, 1-C, the following monthly report is for January, 1986.

The report details the complaince status of the boilers with copies of all visible emissions evaluations in which <u>any</u> reading exceeds 40% opacity.

Total number of VEE copies attached = 3.

In addition, copies of log sheets are attached for all visible emission evaluations when opacity exceeds 40% for two minutes or more.

Number of log sheets attached = 0.

L. C. Polk

Visible Emi... Record

Plant Name: Hercules Inc.

Address: West 7th Street

City: Hattiesburg

Emission Point: 010

Date: 1-6-86

Is emission point operation normal ?

V. E. Observer: Bobbie Draughn

Certification Expiration: 4-24-86

Set No.	Time		Opacity	
	Start	End	Sum	Average
1	12^15	12^21	740	30.8
2	12^21	12^27	755	31.5
3	12^27	12^33	455	19.0

Overall Average: 27.1

	Initial	Final
Distance to discharge	2 Lengths	
Direction to discharge	N	
Height of observation point	Ground	
Height of discharge	225 feet	
Plume color	Gray	
Plume background	Gray Sky	
Water vapor in plume ?		
Wind direction (from)	SE	
Wind speed	5-10 mph	
Ambient temperature	48°	
Discharge temperature		
Sky conditions	Cloudy	

Min.	Seconds 0	15	30	45
0	30	30	30	40
1	40	40	50	50
2	40	30	35	35
3	25	25	20	20
4	15	15	15	15
5	15	35	40	50
0	45	45	50	50
1	30	30	25	25
2	20	20	15	10
3	10	10	10	10
4	30	35	40	30
5	35	35	75	70
0	60	50	35	30
1	20	20	10	10
2	10	10	10	10
3	10	10	10	10
4	10	10	10	10
5	30	20	20	30

Diagram Of Observation/Discharge Point

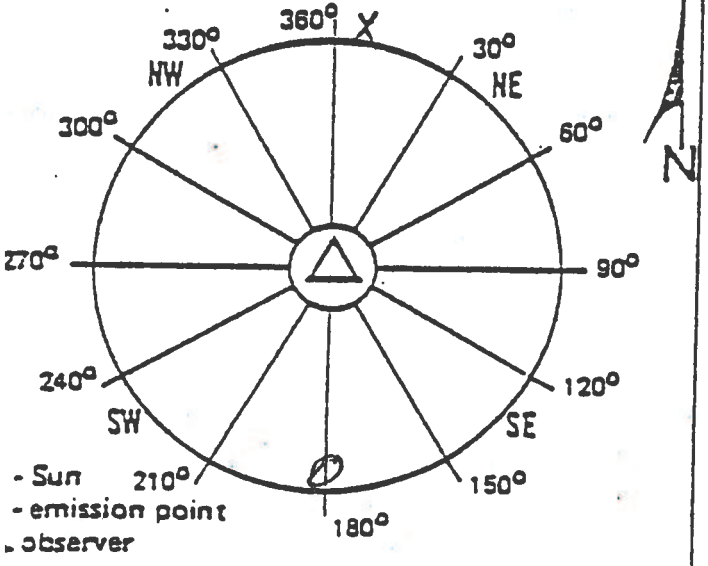

SET NO.	REMARKS
1	
2	
3	

Received By:

Visible Emi 3 Pock Record

Plant Name: Hercules Inc

Address: West 7th Street

City: Hattiesburg

Emission Point: 010

Date: 1-8-86

s emission point operation normal ? _____

	Initial	Final
Distance to discharge	2 Lengths	
Direction to discharge	N	
Height of observation point	Ground	
Height of discharge	225 feet	
Plume color	Gray	
Plume background	Gray Sky	
Water vapor in plume ?		
Wind direction (from)	E	
Wind speed	10 mph	
Ambient temperature	36°	
Discharge temperature		
Sky conditions	PC	

Diagram Of Observation/Discharge Point

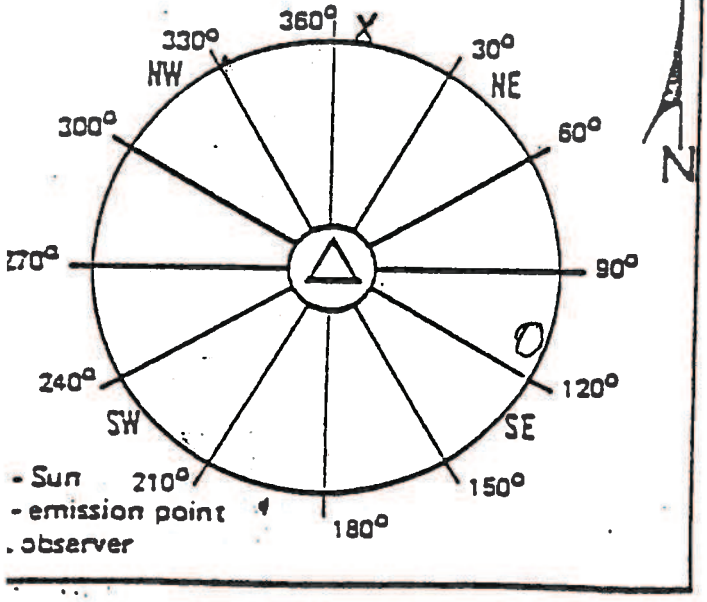

V. E. Observer: Bobbie Drauy

Certification Expiration: 4-24-86

Set No.	Time Start	Time End	Opacity Sum	Opacity Average
1	8^{27}	8^{33}	420	17.5
2	8^{33}	8^{39}	600	25.0
3	8^{39}	8^{45}	760	31.7

Overall Average: 24.7

Min.	Seconds 0	15	30	45
0	15	15	15	15
1	15	15	15	15
2	15	15	15	15
3	15	15	15	15
4	15	20	20	25
5	25	25	25	25
0	20	20	20	20
1	20	20	20	20
2	25	25	35	35
3	30	25	25	25
4	30	30	30	25
5	25	25	25	25
0	25	25	25	20
1	20	20	20	20
2	20	25	25	25
3	30	30	30	30
4	30	30	25	25
5	55	70	75	60

SET NO.	REMARKS
1	
2	
3	

Received By: _____

Visible Em... Record

Plant Name: Hercules Inc

Address: West 7th Street

City: Hattiesburg

Emission Point: 010

Date: 1-7-86

Is emission point operation normal ? _____

V. E. Observer: Bobbie Draughn

Certification Expiration: 4-24-86

Set No.	Time		Opacity	
	Start	End	Sum	Average
1	11 45	11 51	470	19.6
2	11 51	11 57	870	36.3
3	11 57	12 03	870	36.3

Overall Average: 30.7

	Initial	Final
Distance to discharge	2 Lengths	
Direction to discharge	N	
Height of observation point	Ground	
Height of discharge	225 feet	
Plume color	Gray	
Plume background	Gray Sky	
Water vapor in plume?		
Wind direction (from)	E	
Wind speed	10 mph	
Ambient temperature	48°	
Discharge temperature		
Sky conditions	Cloudy	

Min.	Seconds 0	15	30	45
0	20	20	20	20
1	20	20	20	20
2	20	20	20	20
3	20	15	15	15
4	15	15	20	20
5	20	25	25	25
0	25	25	30	30
1	45	50	50	50
2	50	40	50	40
3	35	35	30	30
4	30	30	35	30
5	30	35	35	30
0	30	30	30	30
1	30	30	25	25
2	25	35	30	30
3	30	30	35	30
4	35	40	50	50
5	50	50	60	60

Diagram Of Observation/Discharge Point

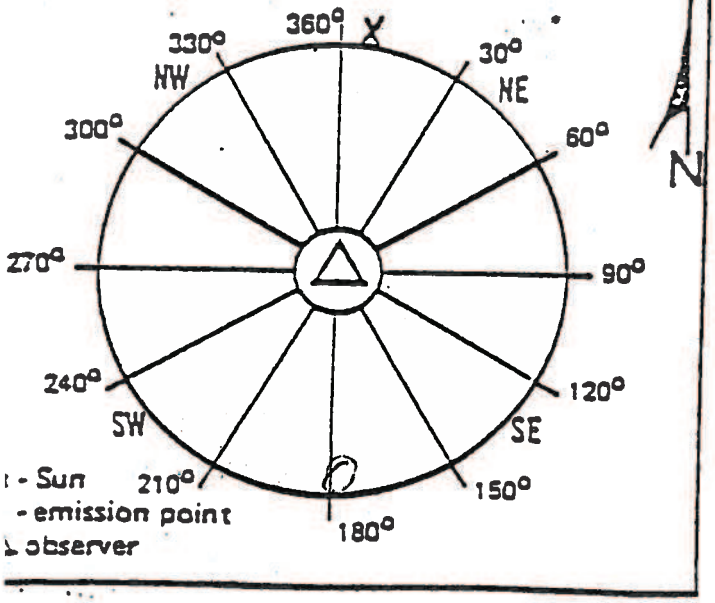

SET NO.	REMARKS
1	
2	
3	

Received By: _____

HERCULES

Hercules Incorporated
West 7th Street
P.O. Box 1937
Hattiesburg, MS 39401
(601) 545-3450

January 14, 1986

RECEIVED
JAN 17 1986
DEPT. OF NATURAL RESOURCE
BUREAU OF POLLUTION CONTROL

Mr. Dwight K. Wylie, P.E. Chief
Air Division
Bureau of Pollution Control
P. O. Box 10385
Jackson, Mississippi 39209

Dear Mr. Wylie:

In reference to Operating Permit No. 0800-0001, please find the attached monthly reports detailing the compliance status of the boilers for emission points 009 and 010.

We will continue to submit this report on a monthly basis.

Very truly yours,

Charles S. Jordan
Environmental Supervisor

CSJ/de
0529L

Attachments

1/09/86

To: C. S. Jordan

From: L. C. Polk

Operating Permit No. 00800-00001 Hattiesburg, MS
Issued For The Operation of Air Emissions Equipment

In reference to the above permit, Part III, Other Requirements, 1-C, the following monthly report is for December, 1985.

The report details the complaince status of the boilers with copies of all visible emissions evaluations in which <u>any</u> reading exceeds 40% opacity.

Total number of VEE copies attached = 3.

In addition, copies of log sheets are attached for all visible emission evaluations when opacity exceeds 40% for two minutes or more.

Number of log sheets attached = 2.

L. C. Polk

Visible E

J. Kolb

Plant Name: Hercules Inc

Address: West 7th Street

City: Hattiesburg

Emission Point: 010

Date: 12-17-85

Is emission point operation normal ?

V. E. Observer: Bobbie Draughn

Certification Expiration: 4-24-86

	Initial	Final
Distance to discharge	2 Lengths	
Direction to discharge	W	
Height of observation point	Ground	
Height of discharge	225 feet	
Plume color	Gray	
Plume background	Gray Sky	
Water vapor in plume ?		
Wind direction (from)	NW	
Wind speed	5-10 mph	
Ambient temperature	57°	
Discharge temperature		
Sky conditions	PC	

Set No.	Time		Opacity	
	Start	End	Sum	Average
1	12^05	12''	665	27.7
2	12''	12^17	700	29.2
3	12^17	12^23	1130	47.1

Overall Average: 34.7

Min.	Seconds 0	15	30	45
0	20	20	20	20
1	30	30	30	25
2	30	30	30	30
3	30	30	30	30
4	25	25	30	30
5	30	30	30	30
0	30	30	30	30
1	30	30	30	30
2	25	25	25	25
3	25	25	25	25
4	30	30	30	30
5	35	35	35	35
0	35	35	40	40
1	35	35	35	35
2	40	40	50	70
3	70	60	40	30
4	40	40	60	70
5	50	60	60	60

Diagram Of Observation/Discharge Point

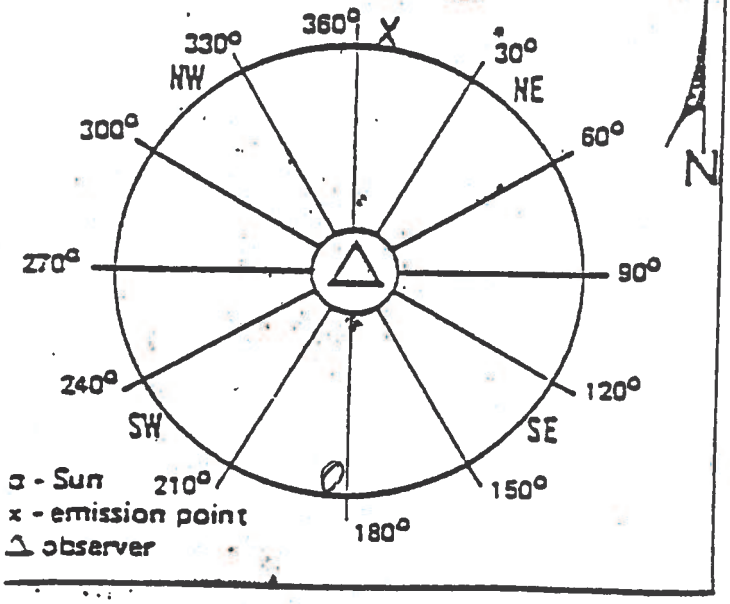

SET NO.	REMARKS
1	
2	
3	

Received By:

Visible E... Record

Plant Name: Hercules Inc.

Address: West 7th Street

City: Hattiesburg

Emission Point: 010

Date: 12-12-85

Is emission point operation normal ? _____

V. E. Observer: Bobbie Draughn

Certification Expiration: 4-24-86

Set No.	Time		Opacity	
	Start	End	Sum	Average
1	12⁰¹	12⁰⁷	845	35.2
2	12⁰⁷	12¹³	835	34.8
3	12¹³	12¹⁹	940	39.2

Overall Average: 36.4

	Initial	Final
Distance to discharge	2 Lengths	
Direction to discharge	N	
Height of observation point	Ground	
Height of discharge	225 feet	
Plume color	Gray	
Plume background	Gray	Sky
Water vapor in plume ?		
Wind direction (from)	NW	
Wind speed	10 mph	
Ambient temperature	56°	
Discharge temperature		
Sky conditions	Raining	

Diagram Of Observation/Discharge Point

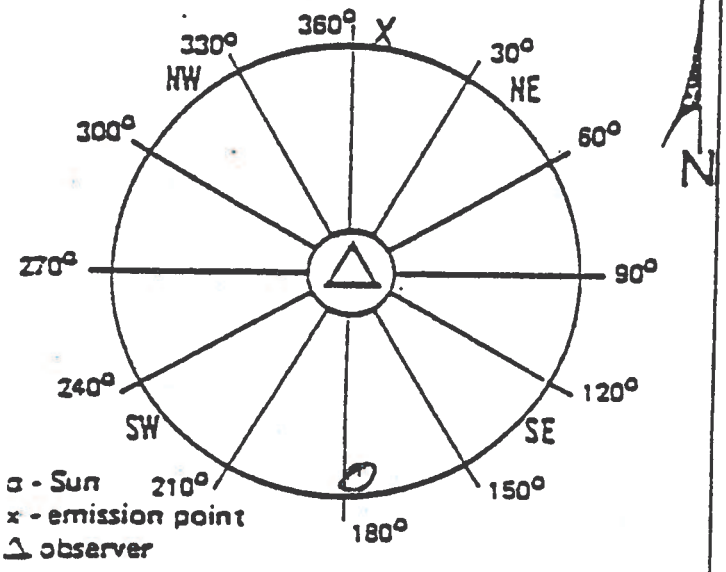

Min.	Seconds 0	15	30	45
0	30	25	25	25
1	25	25	30	30
2	30	30	30	30
3	30	30	40	40
4	40	40	40	40
5	40	50	60	60
0	60	60	30	30
1	25	25	25	25
2	25	25	30	30
3	35	40	40	35
4	35	35	40	40
5	40	35	35	35
0	35	40	40	40
1	35	40	40	35
2	35	35	35	35
3	40	40	40	40
4	40	40	45	40
5	45	45	45	35

SET NO.	REMARKS
1	
2	
3	

Received By: _____

Visible ... ion Record

Plant Name: Hercules Inc

Address: West 7th Street

City: Hattiesburg

Emission Point: 010

Date: 12-27-85

Is emission point operation normal ? ____

V. E. Observer: Bobbie Draughn

Certification Expiration: 4-24-86

Set No.	Time		Opacity	
	Start	End	Sum	Average
1	7^37	7^43	1365	56.9
2	7^43	7^49	1235	51.5
3	7^49	7^55	620	25.8

Overall Average: 44.7

	Initial	Final
Distance to discharge	2 Lengths	
Direction to discharge	N	
Height of observation point	Ground	
Height of discharge	225 feet	
Plume color	Gray	
Plume background	Gray Sky	
Water vapor in plume ?		
Wind direction (from)	S	
Wind speed	5-10 mph	
Ambient temperature	43°	
Discharge temperature		
Sky conditions	Cloudy	

Diagram Of Observation/Discharge Point

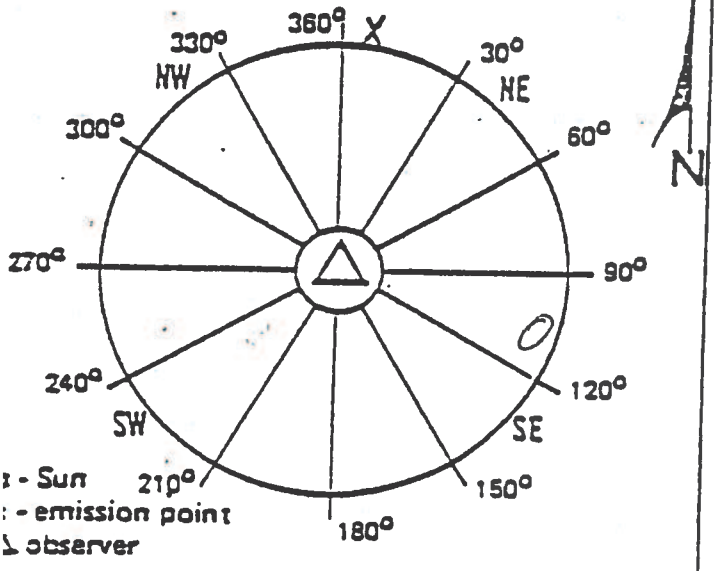

Seconds				
Min.	0	15	30	45
0	35	35	50	50
1	40	40	50	40
2	35	35	40	40
3	35	30	100	100
4	80	60	60	80
5	100	70	70	90
0	100	100	100	100
1	100	100	90	90
2	60	50	30	30
3	20	20	25	25
4	25	25	20	25
5	25	25	25	25
0	30	30	30	30
1	30	30	30	30
2	30	25	25	30
3	30	30	30	20
4	20	20	20	20
5	20	20	20	20

SET NO.	REMARKS
1	
2	
3	

Received By: ____

DATE 12 27 85

BOILER ROOM ENVIRONMENTAL LOG SHEET

Cleaned Fires		7 - 3 Shift	3 - 11 Shift	11 - 7 Shift
No. 1 Boiler	Started			
	Stopped			
No. 2 Boiler	Started			
	Stopped			
No. 3 Boiler	Started			
	Stopped			
No. 4 Boiler	Started	710		1100
	Stopped	900		1230

Comments on Boiler Operation

OPACITY EVALUATION - WOOD BURNING BOILERS

BOILER NO. 1			BOILER NO. 2			BOILER NO. 3			BOILER NO. 4			
Time	Duration	Note	Time	Duration	Note	Time	Duration	Note	Time	Duration	Note	1.Cleaning Boi
												2.Fuel Oil Adjustment
												3.Load Changes
												4.Meter Defect
												5.Cleaning Met Lenses
												6. Wood

COMMENTS ON OPACITY & METER OPERATION

DATE 12 17 85

BOILER ROOM ENVIRONMENTAL LOG SHEET

Cleaned Fires		7 - 3 Shift	3 - 11 Shift	11 - 7 Shift
No. 1 Boiler	Started			
	Stopped			
No. 2 Boiler	Started			
	Stopped			
No. 3 Boiler	Started			
	Stopped			
No. 4 Boiler	Started	7 00	3 20	1100
	Stopped	8 15	4 45	1245

Comments on Boiler Operation

OPACITY EVALUATION - WOOD BURNING BOILERS

BOILER NO. 1			BOILER NO. 2			BOILER NO. 3			BOILER NO. 4			
Time	Duration	Note	Time	Duration	Note	Time	Duration	Note	Time	Duration	Note	1.Cleaning Boil
												2.Fuel Oil Adjustment
												3.Load Changes
												4.Meter Defect
												5.Cleaning Mete Lenses
												6. Wood

COMMENTS ON OPACITY & METER OPERATION

1985 Monthly Reports
HERCULES

DATE	Emission Point	6-Minute OPACITIES (18 min avg)	Shown on Log	Grate Bein Cleane
1/3	009	39.4, 59.8, 47.7 (49)	No Sheet	
1/7	010	49.2, 35, 32	No Sheet	
1/10	010	75, 76, 75, (75)	No	No
1/11	009	41.3, 22, 31	No Sheet	
1/15	009	26, 30, 47	No	No
1/21	010	58.8, 43.8, 31 (44.5)	No	Yes
1/28	010	54, 70, 27 (50)	No. Sheet	
1/30	010	91.3, 32, 15 (45.9)	No	No
1/31	010	61, 46, 23 (43.4)	No	Yes
2/6	009	34.8, 44.4, 44.4 (41.2)	No	No
2/20	010	49.8, 36, 44.4 (43.5)	No Sheet	
2/26	009	38, 51.5, 58.1 (49)	No	No
2/27	009	6, 10, 40	No Sheet	
	010	77.5, 71.3, 23 (57.1)	No Sheet	
2/28	010	51.3, 27, 25	No Sheet	
3/5	009	33.1, 44.2, 44.6 (40.6)	No	No
3/7	010	46, 45, 27	No	No
3/11	010	33, 44.6, 49.4 (42.4)	illegible	No
3/12	009	32, 43, 40	No Sheet	
3/18	010	57.5, 12.3, 14	No	No
3/19	009	22.3, 54.6, 15.2	No	Yes
3/21	010	49, 22.3, 31	No Sheet	
3/22	010	18.3, 19.4, 51	No	Yes
3/28	010	48.3, 66.5, 18.3 (44.4)	No	No

No. Above 47.5% = 009 - 5
010 - 19

$\Rightarrow 6\% \left(\frac{24}{390}\right)$

For 010 $\Rightarrow \frac{19}{195} = 9.7\%$

MAX No OBS - 390

Hercules Incorporated
West 7th Street
P.O. Box 1937
Hattiesburg, MS 39401
(601) 545-3450

December 4, 1985

Mr. Dwight K. Wylie, P.E. Chief
Air Division
Bureau of Pollution Control
P. O. Box 10385
Jackson, Mississippi 39209

Dear Mr. Wylie:

In reference to Operating Permit No. 0800-0001, please find the attached monthly reports detailing the compliance status of the boilers for emission points 009 and 010.

We will continue to submit this report on a monthly basis.

Very truly yours,

Charles S. Jordan

Charles S. Jordan
Environmental Supervisor

CSJ/de
0529L

12/02/85

To: C.S. Jordan

From: R.A. Van Beek

Operating Permit No. 00800-00001 Hattiesburg, MS
Issued For The Operation of Air Emissions Equipment

In reference to the above permit, Part III, Other Requirements, 1-C,the following monthly report is for September, 1985.

The report details the complaince status of the boilers with copies of all visible emissions evaluations in which <u>any</u> reading exceeds 40% opacity.

Total number of VEE copies attached = 5.

In addition, copies of log sheets are attached for all visible emission evaluations when opacity exceeds 40% for two minutes or more.

Number of log sheets attached = 1.

R.A. Van Beek

Bureau of Pollution Control
Visible Emissions Evaluation Record

Plant Name: Hercules Inc
Address: West 7th Street
City: Hattiesburg
Emission Point: 010
Date: 9-26-85
Is emission point operation normal ? _____

V. E. Observer: Bobbie Draughn
Certification Expiration: 10-18-85

Set No.	Time Start	Time End	Opacity Sum	Opacity Average
1	1:10	1:16	405	16.9
2	1:16	1:22	355	14.8
3	1:22	1:28	475	19.8

Overall Average: 17.2

	Initial	Final
Distance to discharge	2 Lengths	
Direction to discharge	N	
Height of observation point	Ground	
Height of discharge	225 feet	
Plume color	Gray	
Plume background	Gray Sky	
Water vapor in plume ?		
Wind direction (from)	W	
Wind speed	15 mph	
Ambient temperature	72°	
Discharge temperature		
Sky conditions	Pc	

Seconds

Min.	0	15	30	45
0	5	10	10	10
1	10	10	10	10
2	5	5	5	5
3	65	100	80	10
4	5	5	5	5
5	5	10	10	10
0	5	5	5	5
1	5	5	5	5
2	5	5	5	5
3	5	5	5	5
4	5	10	10	10
5	60	30	50	100
0	30	15	10	10
1	10	15	20	20
2	10	20	20	30
3	30	30	20	20
4	20	20	20	25
5	20	20	20	20

Diagram Of Observation/Discharge Point

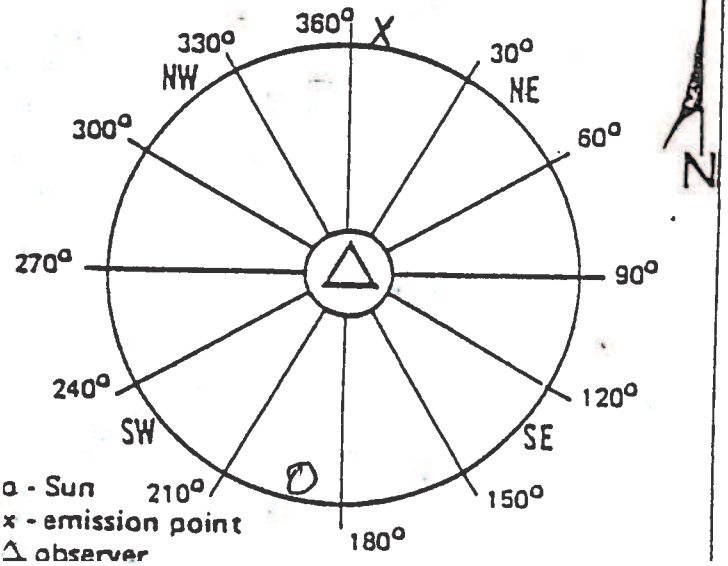

SET NO.	REMARKS
1	
2	
3	

Bureau of Pollution Control
Visible Emissions Evaluation Record

Plant Name: Hercules Inc
Address: West 7th Street
City: Hattiesburg
Emission Point: 010
Date: 9-24-85
Is emission point operation normal ?

V. E. Observer: Howard Bynum / Bobbie Draughn
Certification Expiration: 10-18-85

Set No.	Time		Opacity	
	Start	End	Sum	Average
1	1:00 Pm	1:06 Pm		
2	1:06 Pm	1:12 Pm		
3	1:12 Pm	1:18 Pm		

Overall Average:

	Initial	Final
Distance to discharge	2 Lengths	
Direction to discharge	N	
Height of observation point	Ground	
Height of discharge	225 feet	
Plume color	GRAY	
Plume background	GRAY	Sky
Water vapor in plume ?		
Wind direction (from)	EAST	
Wind speed	5-10 MPH	
Ambient temperature	68°F	
Discharge temperature		
Sky conditions	Cloudy	

Min.	Seconds 0	15	30	45
0	15	15	15	15
1	15	15	15	15
2	20	20	20	15
3	15	15	15	15
4	15	15	15	15
5	15	15	15	15
0	15	10	10	10
1	10	10	10	10
2	10	10	10	10
3	10	10	10	10
4	10	10	10	10
5	10	10	10	10
0	60	70	75	35
1	25	20	15	15
2	15	15	15	15
3	15	15	15	15
4	15	15	15	15
5	15	15	15	15

Diagram Of Observation/Discharge Point

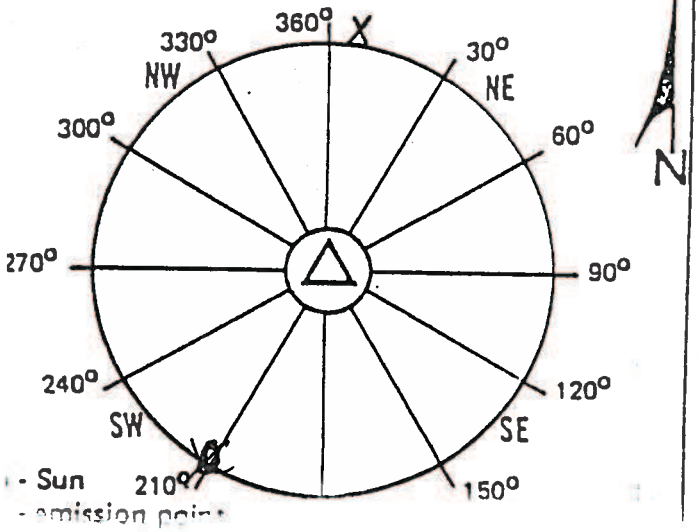

SET NO.	REMARKS
1	
2	
3	

Visible Emissions Evaluation Record

Plant Name: Hercules Inc

Address: West 7th Street

City: Hattiesburg

Emission Point: 010

Date: 9-16-85

Is emission point operation normal ? _____

V. E. Observer: Bobbie Draughn

Certification Expiration: 10-18-85

Set No.	Time		Opacity	
	Start	End	Sum	Average
1	10^{47}	10^{53}	400	16.7
2	10^{53}	10^{59}	570	22.8
3	10^{59}	11^{05}	120	5.0

Overall Average: 15.2

	Initial	Final
Distance to discharge	2 Lengths	
Direction to discharge	N	
Height of observation point	Ground	
Height of discharge	225 feet	
Plume color	Gray	
Plume background	Blue Sky	
Water vapor in plume ?		
Wind direction (from)	E	
Wind speed	10 mph	
Ambient temperature	77°	
Discharge temperature		
Sky conditions	Pc	

Min.	Seconds 0	15	30	45
0	25	25	35	35
1	50	50	40	25
2	20	10	10	5
3	5	5	5	5
4	5	5	5	5
5	5	5	5	15
0	25	25	30	30
1	30	30	35	35
2	35	30	30	25
3	30	30	35	35
4	35	15	5	5
5	5	5	5	5
0	5	5	5	5
1	5	5	5	5
2	5	5	5	5
3	5	5	5	5
4	5	5	5	5
5	5	5	5	5

Diagram Of Observation/Discharge Point

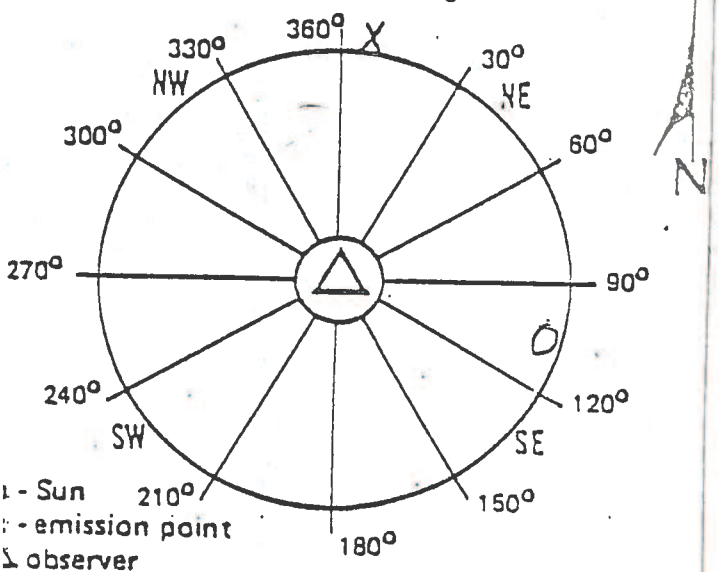

S - Sun
E - emission point
O observer

SET NO.	REMARKS
1	
2	
3	

Visible Emissions Evaluation Record

Plant Name: Hercules Inc

Address: West 7th Street

City: Hattiesburg

Emission Point: 010

Date: 9-12-85

Is emission point operation normal ? _____

V. E. Observer: Bobbie Draughn

Certification Expiration: 10-18-85

Set No.	Time		Opacity	
	Start	End	Sum	Average
1	5^{00}	5^{06}	975	40.6
2	5^{06}	5^{12}	2060	85.8
3	5^{12}	5^{18}	1700	70.8

Overall Average: 65.7

	Initial	Final
Distance to discharge	2 Lengths	
Direction to discharge	N	
Height of observation point	Ground	
Height of discharge	225 feet	
Plume color	Gray	
Plume background	Blue Sky	
Water vapor in plume ?		
Wind direction (from)	Variable	
Wind speed	10 mph	
Ambient temperature	91°	
Discharge temperature		
Sky conditions	Clear	

Min.	Seconds 0	15	30	45
0	25	25	25	25
1	25	30	25	35
2	40	40	40	50
3	40	40	40	40
4	40	40	50	50
5	60	60	60	60
0	70	70	80	80
1	75	75	90	90
2	100	100	100	100
3	100	90	100	90
4	100	80	80	90
5	75	75	75	75
0	70	70	65	65
1	60	60	60	60
2	60	70	60	60
3	70	80	90	90
4	80	70	80	80
5	75	75	75	75

Diagram Of Observation/Discharge Point

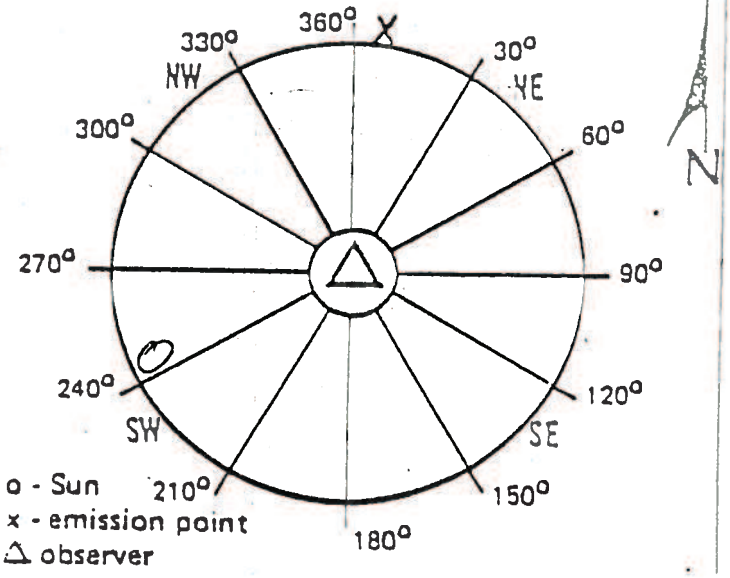

SET NO.	REMARKS
1	
2	
3	

DATE 9-12

BOILER ROOM ENVIRONMENTAL LOG SHEET

Cleaned Fires		7 - 3 Shift	3 - 11 Shift	11 - 7 Shift
No. 1 Boiler	Started			
	Stopped			
No. 2 Boiler	Started			
	Stopped			
No. 3 Boiler	Started			
	Stopped			
No. 4 Boiler	Started	7:15	3:20	11:30
	Stopped	9:20	5:10	2:20

Comments on Boiler Operation

OPACITY EVALUATION - WOOD BURNING BOILERS

BOILER NO. 1			BOILER NO. 2			BOILER NO. 3			BOILER NO. 4			
Time	Duration	Note	Time	Duration	Note	Time	Duration	Note	Time	Duration	Note	1.Cleaning Boile
									2:37	2-m	7	2.Fuel Oil Adjustment
									5:20	4 m	7	3.Load Changes
												4.Meter Defect
												5.Cleaning Meter Lenses
												6. Wood
												7. P[illegible]se

COMMENTS ON OPACITY & METER OPERATION

Bureau of Pollution Control
Visible Emissions Evaluation Record

Plant Name: Hercules Inc
Address: West 7th Street
City: Hattiesburg
Emission Point: 010
Date: 9-5-85
Is emission point operation normal ? _____

V. E. Observer: Bobbie Draughn
Certification Expiration: 10-18-85

Set No.	Time		Opacity	
	Start	End	Sum	Average
1	8^13	8^19	590	24.6
2	8^19	8^25	200	8.3
3	8^25	8^31	245	10.2

Overall Average: 14.4

	Initial	Final
Distance to discharge	2 Lengths	
Direction to discharge	N	
Height of observation point	Ground	
Height of discharge	225 feet	
Plume color	Gray	
Plume background	Gray Sky	
Water vapor in plume ?		
Wind direction (from)	NW	
Wind speed	5 mph	
Ambient temperature	78°	
Discharge temperature		
Sky conditions	Cloudy	

Min.	Seconds 0	15	30	45
0	30	40	50	50
1	35	30	25	25
2	30	30	25	15
3	15	15	15	20
4	25	25	20	20
5	15	10	15	10
0	10	10	10	10
1	10	10	10	10
2	10	5	5	5
3	5	5	5	5
4	5	10	10	10
5	10	10	10	10
0	10	10	10	10
1	10	10	10	10
2	10	10	10	10
3	10	10	10	10
4	10	15	10	10
5	10	10	10	10

Diagram Of Observation/Discharge Point

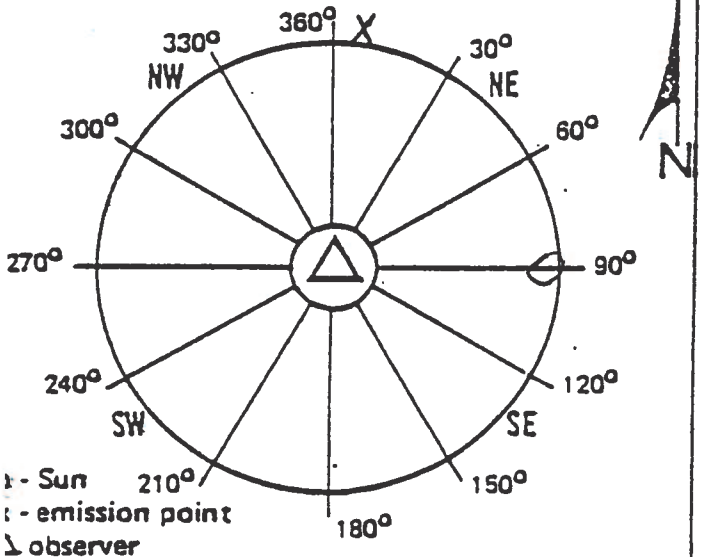

SET NO.	REMARKS
1	
2	
3	

Received By: _____

12/02/85

To: C.S. Jordan

From: R.A. Van Beek

Operating Permit No. 00800-00001 Hattiesburg, MS
Issued For The Operation of Air Emissions Equipment

In reference to the above permit, Part III, Other Requirements, 1-C,the following monthly report is for October, 1985.

The report details the complaince status of the boilers with copies of all visible emissions evaluations in which <u>any</u> reading exceeds 40% opacity.

Total number of VEE copies attached = 3.

In addition, copies of log sheets are attached for all visible emission evaluations when opacity exceeds 40% for two minutes or more.

Number of log sheets attached = 0.

R.A. Van Beek

Visible Emissions Evaluation Record

Plant Name: Hercules Inc.

Address: West 7th Street

City: Hattiesburg

Emission Point: 010

Date: 10-30-85

Is emission point operation normal ?

V. E. Observer: Bobbie Draughn

Certification Expiration: 4-23-86

Set No.	Time Start	Time End	Opacity Sum	Opacity Average
1	12^{45}	12^{51}	765	31.9
2	12^{51}	12^{57}	910	37.9
3	12^{57}	1^{03}	845	35.2

Overall Average: 35.0

	Initial	Final
Distance to discharge	2 Lengths	
Direction to discharge	N	
Height of observation point	Ground	
Height of discharge	225 feet	
Plume color	Gray	
Plume background	Gray Sky	
Water vapor in plume ?		
Wind direction (from)	E	
Wind speed	20 mph	
Ambient temperature	64°	
Discharge temperature		
Sky conditions	Cloudy	

Min.	Seconds 0	15	30	45
0	30	30	30	30
1	30	30	20	20
2	25	25	25	25
3	25	25	30	40
4	40	40	40	40
5	35	40	40	50
0	40	40	40	30
1	40	40	40	40
2	35	35	40	40
3	40	40	40	30
4	35	35	35	35
5	40	40	40	40
0	40	40	40	40
1	40	40	35	35
2	35	30	30	25
3	30	30	40	40
4	30	35	40	40
5	35	35	30	30

Diagram Of Observation/Discharge Point

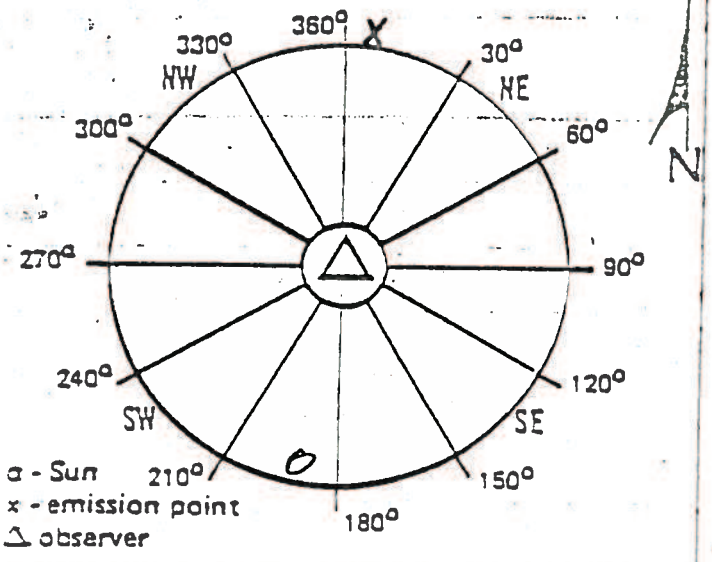

SET NO.	REMARKS
1	
2	
3	

Received By:

Bureau of Pollution Control
Visible Emissions Evaluation Record

Plant Name: Hercules Inc.
Address: West 7th Street
City: Hattiesburg
Emission Point: 010
Date: 10-25-85
Is emission point operation normal ?

V. E. Observer: Bobbie Draughon
Certification Expiration: 4-23-86

Set No.	Time Start	Time End	Opacity Sum	Opacity Average
1	12^00	12^06	665	27.7
2	12^06	12^12	805	33.5
3	12^12	12^18	800	33.3

Overall Average: 31.5

	Initial	Final
Distance to discharge	2 Lengths	
Direction to discharge	N	
Height of observation point	Ground	
Height of discharge	225 feet	
Plume color	Gray	
Plume background	Gray Sky	
Water vapor in plume ?		
Wind direction (from)	SE	
Wind speed	10-15 mph	
Ambient temperature	79°	
Discharge temperature		
Sky conditions	Pc	

Diagram Of Observation/Discharge Point

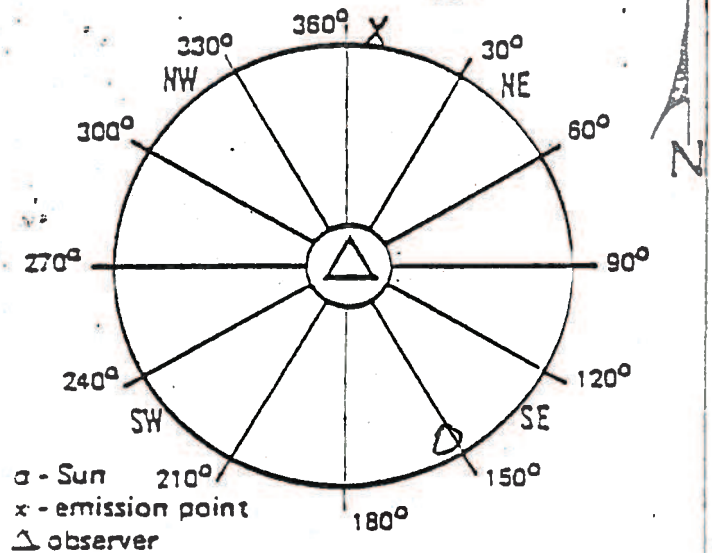

Min.	Seconds 0	15	30	45
0	15	15	15	15
1	15	15	15	15
2	20	20	20	20
3	30	25	35	45
4	45	45	40	40
5	40	40	40	40
0	40	40	35	40
1	35	35	35	35
2	30	30	30	30
3	30	30	35	35
4	30	30	35	35
5	35	35	30	30
0	35	35	35	35
1	35	35	35	35
2	35	35	30	30
3	35	35	35	35
4	40	40	40	40
5	35	25	15	15

SET NO.	REMARKS
1	
2	
3	

Received By:

Bureau of Pollution Control
Visible Emissions Evaluation Record

Plant Name: Hercules Inc.
Address: West 7th Street
City: Hattiesburg
Emission Point: 010
Date: 10-14-85
Is emission point operation normal ?

V. E. Observer: Bobbie Draughn
Certification Expiration: 10-18-85

Set No.	Time		Opacity	
	Start	End	Sum	Average
1	1'10	1'16	850	35.4
2	1'16	1'22	705	29.4
3	1'22	1'28	880	36.7

Overall Average: 33.8

	Initial	Final
Distance to discharge	2 Lengths	
Direction to discharge	N	
Height of observation point	Ground	
Height of discharge	225 feet	
Plume color	Gray	
Plume background	Blue Sky	
Water vapor in plume ?		
Wind direction (from)	S	
Wind speed	5-10 mph	
Ambient temperature	86°	
Discharge temperature		
Sky conditions	PC	

Min.	Seconds 0	15	30	45
0	20	30	40	40
1	50	50	40	30
2	30	30	40	40
3	40	40	30	30
4	35	35	35	35
5	35	35	30	30
0	30	30	30	30
1	30	30	30	25
2	20	30	30	25
3	25	25	30	30
4	30	30	30	30
5	30	35	35	35
0	25	25	25	25
1	30	30	30	30
2	30	30	35	35
3	35	35	40	40
4	40	40	50	50
5	50	50	50	50

Diagram Of Observation/Discharge Point

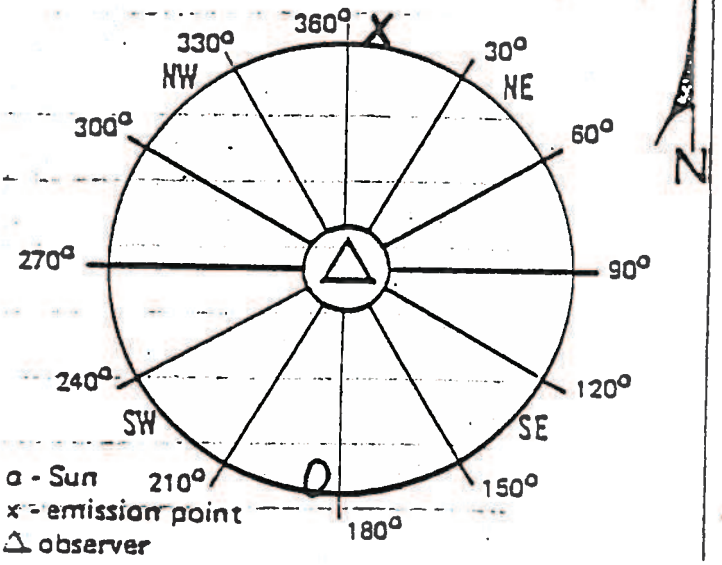

SET NO.	REMARKS
1	
2	
3	

12/02/85

To: C.S. Jordan

From: R.A. Van Beek

Operating Permit No. 00800-00001 Hattiesburg, MS
Issued For The Operation of Air Emissions Equipment

In reference to the above permit, Part III, Other Requirements, 1-C,the following monthly report is for November, 1985.

The report details the complaince status of the boilers with copies of all visible emissions evaluations in which <u>any</u> reading exceeds 40% opacity.

Total number of VEE copies attached = 4.

In addition, copies of log sheets are attached for all visible emission evaluations when opacity exceeds 40% for two minutes or more.

Number of log sheets attached = 0.

R.A. Van Beek

Bureau of Pollution Control

Visible Emissions Evaluation Record

Plant Name: Hercules Inc.

Address: West 7th Street

City: Hattiesburg

Emission Point: 010

Date: 11-15-85

Is emission point operation normal ? _____

V. E. Observer: Bobbie Draughn

Certification Expiration: 4-23-86

Set No.	Time		Opacity	
	Start	End	Sum	Average
1	10^{15}	10^{21}	550	22.9
2	10^{21}	10^{27}	720	30.0
3	10^{27}	10^{33}	815	34.0

Overall Average: 29.0

	Initial	Final
Distance to discharge	2 Lengths	
Direction to discharge	N	
Height of observation point	Ground	
Height of discharge	225 feet	
Plume color	Gray	
Plume background	Gray Sky	
Water vapor in plume ?		
Wind direction (from)	SE	
Wind speed	10-15 mph	
Ambient temperature	80°	
Discharge temperature		
Sky conditions	Pc	

	Seconds			
Min.	0	15	30	45
0	20	20	20	20
1	20	15	20	20
2	15	15	15	10
3	10	10	15	15
4	25	35	40	30
5	40	40	40	40
0	30	40	40	40
1	35	30	15	15
2	15	30	30	20
3	20	10	20	20
4	20	40	40	40
5	40	50	40	40
0	40	40	40	50
1	40	40	40	30
2	30	30	30	30
3	40	40	25	30
4	30	30	30	30
5	30	30	30	30

Diagram Of Observation/Discharge Point

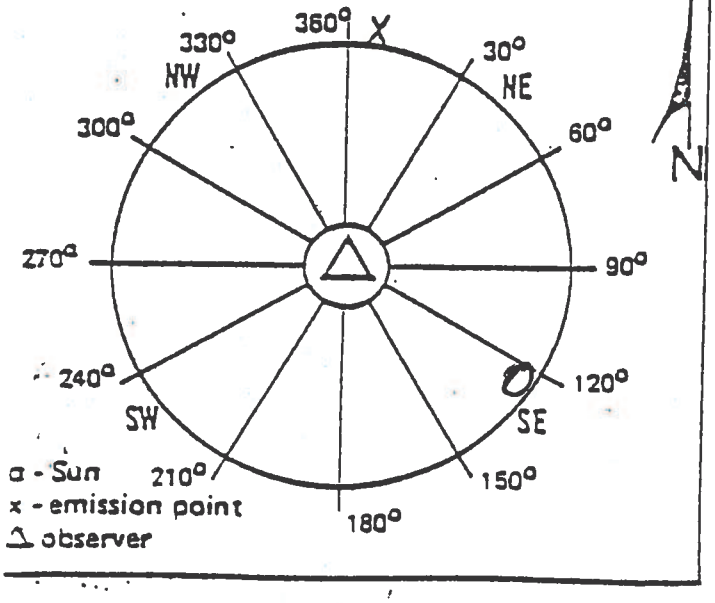

SET NO.	REMARKS
1	
2	
3	

Received By: _____

Bureau of Pollution Control
Visible Emissions Evaluation Record

Plant Name: Hercules Inc
Address: West 7th Street
City: Hattiesburg
Emission Point: 010
Date: 11-13-85
Is emission point operation normal ?

V. E. Observer: Bobbie Draughn
Certification Expiration: 4-23-86

Set No.	Time		Opacity	
	Start	End	Sum	Average
1	400	406	675	28.1
2	406	412	740	30.8
3	412	418	805	33.5

Overall Average: 30.8

	Initial	Final
Distance to discharge	2 Lengths	
Direction to discharge	N	
Height of observation point	Ground	
Height of discharge	225 feet	
Plume color	Gray	
Plume background	Gray Sky	
Water vapor in plume ?		
Wind direction (from)	NE	
Wind speed	5-10 mph	
Ambient temperature	77°	
Discharge temperature		
Sky conditions	Cloudy	

Diagram Of Observation/Discharge Point

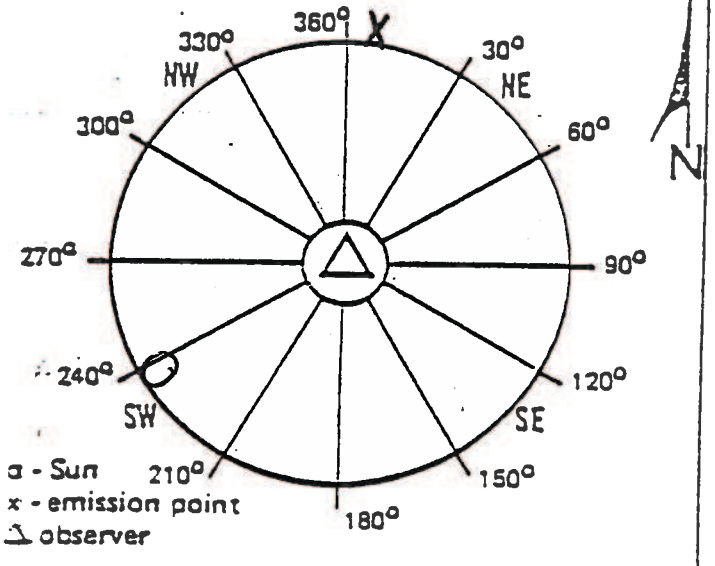

Min.	Seconds 0	15	30	45
0	25	25	25	25
1	25	25	30	30
2	25	25	30	25
3	30	20	25	30
4	30	30	30	30
5	30	40	35	30
0	25	25	30	30
1	30	30	25	25
2	25	30	30	25
3	20	25	25	25
4	25	25	35	40
5	50	50	50	40
0	15	15	25	25
1	25	35	35	40
2	50	50	60	60
3	45	50	45	40
4	25	25	25	25
5	25	20	20	25

SET NO.	REMARKS
1	
2	
3	

Received By:

Visible Emissions Evaluation Record

Plant Name: Hercules Inc

Address: West 7th Street

City: Hattiesburg

Emission Point: 010

Date: 11-21-85

Is emission point operation normal ? _____

V. E. Observer: Bobbie Draughn

Certification Expiration: 4-24-86

Set No.	Time		Opacity	
	Start	End	Sum	Average
1	1'11	1'17	880	36.7
2	1'17	1'23	705	29.4
3	1'23	1'29	585	24.4

Overall Average: 30-2

	Initial	Final
Distance to discharge	2 Lengths	
Direction to discharge	N	
Height of observation point	Ground	
Height of discharge	225 feet	
Plume color	Gray	
Plume background	Gray Sky	
Water vapor in plume ?		
Wind direction (from)	NW	
Wind speed	10-15 mph	
Ambient temperature	63°	
Discharge temperature		
Sky conditions	Cloudy	

Diagram Of Observation/Discharge Point

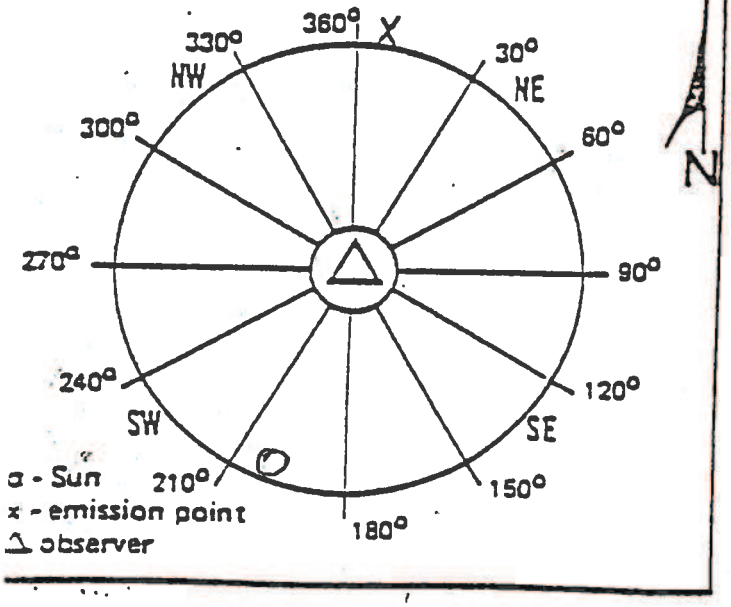

Min.	Seconds 0	15	30	45
0	15	15	35	30
1	40	40	50	40
2	40	35	35	35
3	35	35	35	35
4	35	35	40	40
5	50	50	40	40
0	40	40	35	40
1	40	40	25	30
2	30	30	30	30
3	25	20	20	15
4	15	15	25	30
5	30	30	30	40
0	35	35	35	30
1	30	30	35	35
2	35	25	15	15
3	15	15	20	20
4	25	25	25	20
5	20	20	15	10

SET NO.	REMARKS
1	
2	
3	

Received By: _____

Bureau of Pollution Control
Visible Emissions Evaluation Record

Plant Name: Hercules Inc.
Address: West 7th Street
City: Hattiesburg
Emission Point: 010
Date: 11-6-85
Is emission point operation normal ?

V. E. Observer: Bobbie Draughn
Certification Expiration: 4-23-86

Set No.	Time		Opacity	
	Start	End	Sum	Average
1	1⁰⁰	1⁰⁶	940	39.2
2	1⁰⁶	1¹²	865	36.0
3	1¹²	1¹⁸	915	38.1

Overall Average: 37.8

	Initial	Final
Distance to discharge	2 Lengths	
Direction to discharge	N	
Height of observation point	Ground	
Height of discharge	225 feet	
Plume color	Gray	
Plume background	Blue Sky	
Water vapor in plume ?		
Wind direction (from)	W	
Wind speed	10 mph	
Ambient temperature	68°	
Discharge temperature		
Sky conditions	Clear	

Min.	Seconds 0	15	30	45
0	30	30	30	30
1	30	30	30	30
2	30	35	35	40
3	30	30	40	60
4	50	60	60	60
5	50	40	40	40
0	40	40	40	40
1	35	30	35	35
2	40	40	35	35
3	30	35	35	30
4	40	40	40	40
5	30	30	35	35
0	35	35	30	30
1	35	35	40	40
2	35	35	35	40
3	35	35	35	35
4	40	50	40	50
5	45	45	40	40

Diagram Of Observation/Discharge Point

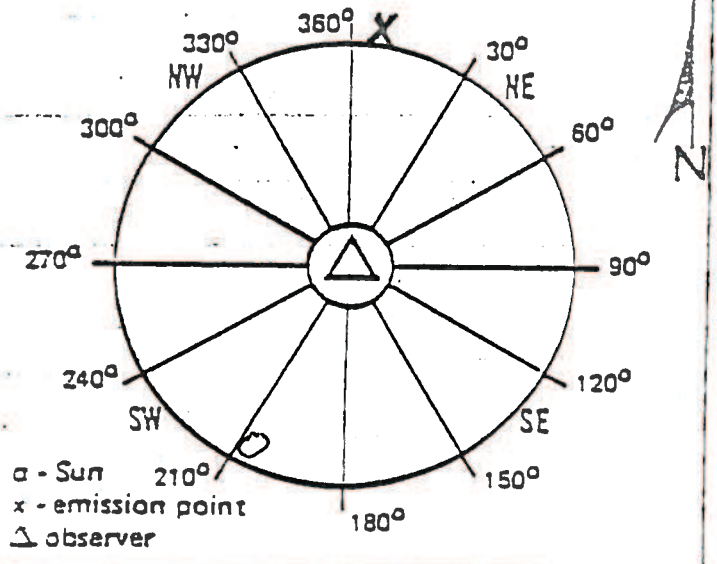

SET NO.	REMARKS
1	
2	
3	

Received By:

Forrest

HERCULES

Hercules Incorporated
West 7th Street
P.O. Box 1937
Hattiesburg, MS 39401
(601) 545-3450

RECEIVED
SEP 26 1985
DEPT. OF NATURAL RESOURCE
BUREAU OF POLLUTION CONTROL

September 25, 1985

Mr. Dwight K. Wylie, P.E. Chief
Air Division
Bureau of Pollution Control
P. O. Box 10385
Jackson, Mississippi 39209

Dear Mr. Wylie:

In reference to operating permit No. 0800-0001, please find the attached monthly reports detailing the compliance status of the boilers for emission points 009 and 010.

We will continue to submit this report on a monthly basis.

Very truly yours,

Charles Jordan

Charles Jordan
Environmental Supervisor

CSJ:bs

Attachments

9/23/85

To: C.S. Jordan

From: R.A. Van Beek

Operating Permit No. 00800-00001 Hattiesburg, MS
Issued For The Operation of Air Emissions Equipment

In reference to the above permit, Part III, Other Requirements, 1-C, the following monthly report is for July, 1985.

The report details the complaince status of the boilers with copies of all visible emissions evaluations in which <u>any</u> reading exceeds 40% opacity.

Total number of VEE copies attached = 8.

In addition, copies of log sheets are attached for all visible emission evaluations when opacity exceeds 40% for two minutes or more.

Number of log sheets attached = 3.

R. A. Van Beek

Bureau of Pollution Control
Visible Emissions Evaluation Record

Plant Name: Hercules Inc
Address: West 7th Street
City: Hattiesburg
Emission Point: 010
Date: 7-29-85
Is emission point operation normal ? _____

V. E. Observer: Bobbie Draughn
Certification Expiration: 10-18-85

Set No.	Time		Opacity	
	Start	End	Sum	Average
1	8^{13}	8^{19}	835	34.8
2	8^{19}	8^{25}	815	34.0
3	8^{25}	8^{31}	850	35.4

Overall Average: 34.7

	Initial	Final
Distance to discharge	2 Lengths	
Direction to discharge	N	
Height of observation point	Ground	
Height of discharge	225 feet	
Plume color	Gray	
Plume background	Gray Sky	
Water vapor in plume ?		
Wind direction (from)	NW	
Wind speed	5 mph	
Ambient temperature	81°	
Discharge temperature		
Sky conditions	PC	

Min.	Seconds 0	15	30	45
0	25	25	35	35
1	35	35	35	35
2	35	35	35	35
3	35	35	40	40
4	40	40	40	35
5	35	35	30	30
0	30	35	30	20
1	20	20	25	25
2	30	30	35	35
3	35	35	40	40
4	40	40	35	35
5	40	50	50	40
0	40	40	35	35
1	40	35	30	30
2	30	30	30	30
3	25	25	20	20
4	35	35	45	50
5	50	45	45	50

Diagram Of Observation/Discharge Point

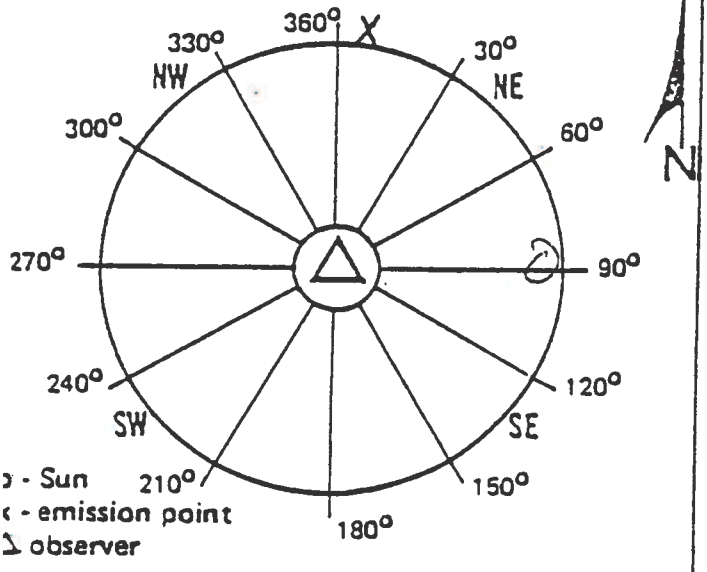

SET NO.	REMARKS
1	
2	
3	

Received By: _____

Visible Emissions Evaluation Record

Plant Name: Hercules Inc

Address: West 7th Street

City: Hattiesburg

Emission Point: 010

Date: 7-17-85

Is emission point operation normal ? _____

V. E. Observer: Bobbie Draughn

Certification Expiration: 10-18-85

Set No.	Time		Opacity	
	Start	End	Sum	Average
1	11 58	12 04	920	38.3
2	12 04	12 10	955	39.8
3	12 10	12 16	1030	42.9

Overall Average: 40.3

	Initial	Final
Distance to discharge	2 Lengths	
Direction to discharge	N	
Height of observation point	Ground	
Height of discharge	225 feet	
Plume color	Gray	
Plume background	Gray Sky	
Water vapor in plume ?		
Wind direction (from)	SE	
Wind speed	10 mph	
Ambient temperature	85°	
Discharge temperature		
Sky conditions	PC	

Diagram Of Observation/Discharge Point

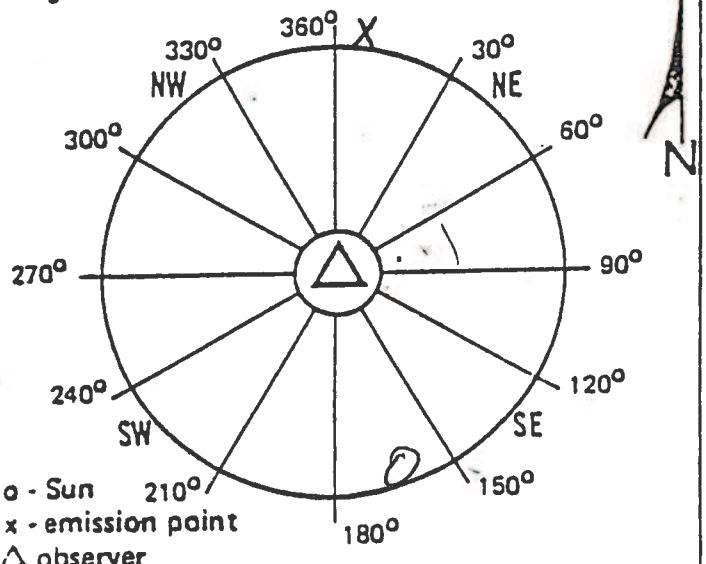

Min.	Seconds 0	15	30	45
0	40	40	40	40
1	40	35	35	35
2	40	40	40	35
3	35	35	40	40
4	40	40	35	35
5	40	40	40	40
0	40	40	50	40
1	40	50	35	30
2	40	40	50	50
3	40	40	40	40
4	40	40	40	40
5	35	35	30	30
0	30	35	40	40
1	40	50	50	40
2	45	40	40	40
3	35	40	50	50
4	50	50	50	50
5	45	45	40	35

SET NO.	REMARKS
1	
2	
3	Steam Load change

Received By: _____

Visible Emissions Evaluation Record

Plant Name: Hercules Inc

Address: West 7th Street

City: Hattiesburg

Emission Point: 010

Date: 7-16-85

Is emission point operation normal ? _____

V. E. Observer: Bobbie Draughn

Certification Expiration: 10-18-85

Set No.	Time		Opacity	
	Start	End	Sum	Average
1	1140	1146	1540	64.2
2	1146	1152	1520	63.3
3	1152	1158	1200	50.0

Overall Average: 59.2

	Initial	Final
Distance to discharge	2 Lengths	
Direction to discharge	N	
Height of observation point	Ground	
Height of discharge	225 feet	
Plume color	Gray	
Plume background	Blue Sky	
Water vapor in plume ?		
Wind direction (from)	E	
Wind speed	5 mph	
Ambient temperature	88°	
Discharge temperature		
Sky conditions	PC	

Min.	Seconds 0	15	30	45
0	60	60	60	70
1	60	70	70	60
2	70	70	70	70
3	70	70	70	70
4	60	70	60	60
5	60	50	50	60
0	70	70	75	75
1	75	80	75	70
2	75	75	75	75
3	70	60	50	60
4	60	50	50	50
5	50	50	40	40
0	50	50	40	40
1	40	40	50	40
2	50	60	50	50
3	50	50	50	40
4	50	60	50	50
5	50	60	60	70

Diagram Of Observation/Discharge Point

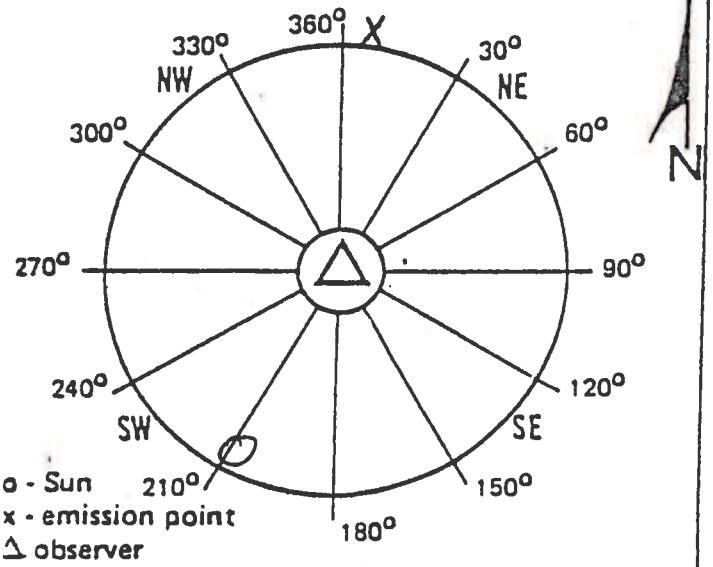

SET NO.	REMARKS
1	Running with Just 2 Boilers
2	With Large Steam Load
3	

Received By: _____

DATE 7-16-85

BOILER ROOM ENVIRONMENTAL LOG SHEET

Cleaned Fires		7 - 3 Shift	3 - 11 Shift	11 - 7 Shift
	Started			
. 1 Boiler	Stopped		6:30	4:00
	Started		2:15	5:55
. 2 Boiler	Stopped		—	12:50
	Started		—	1:05
. 3 Boiler	Stopped		305	2:00
	Started		4:20	2:20
. 4 Boiler	Stopped			

omments on Boiler Operation

OPACITY EVALUATION - WOOD BURNING BOILERS

BOILER NO. 1			BOILER NO. 2			BOILER NO. 3			BOILER NO. 4		
ime	Duration	Note	Time	Duration	Note	Time	Duration	Note	Time	Duration	Note
			12:38	1-M	3				825	10-5	1
			1:32	6-M	6				1210	20	2
									1:12	10-5	3

1. Cleaning Boile
2. Fuel Oil Adjustment
3. Load Changes
4. Meter Defect
5. Cleaning Meter Lenses
6. Wood

OMMENTS ON OPACITY & METER OPERATION

Visible Emissions Evaluation Record

Plant Name: Hercules Inc

Address: West 7th Street

City: Hattiesburg

Emission Point: 009

Date: 7-16-85

Is emission point operation normal ? _____

V. E. Observer: Bobbie Draughn

Certification Expiration: 10-18-85

Set No.	Time		Opacity	
	Start	End	Sum	Average
1	1140	1146	380	15.8
2	1146	1152	680	28.3
3	1152	1158	1020	42.5

Overall Average: 28.9

	Initial	Final
Distance to discharge	2 Lengths	
Direction to discharge	N	
Height of observation point	Ground	
Height of discharge	200 feet	
Plume color	Gray	
Plume background	Blue Sky	
Water vapor in plume ?		
Wind direction (from)	E	
Wind speed	5 mph	
Ambient temperature	88°	
Discharge temperature		
Sky conditions	Pc	

Min.	Seconds 0	15	30	45
0	10	10	10	15
1	15	15	10	10
2	10	10	10	20
3	20	20	20	15
4	20	20	20	20
5	20	20	20	20
0	20	20	20	20
1	20	20	20	20
2	25	25	25	30
3	30	30	30	30
4	30	35	30	30
5	30	40	50	50
0	50	40	40	50
1	40	40	40	40
2	40	40	50	50
3	50	50	40	40
4	40	40	40	40
5	40	40	40	40

Diagram Of Observation/Discharge Point

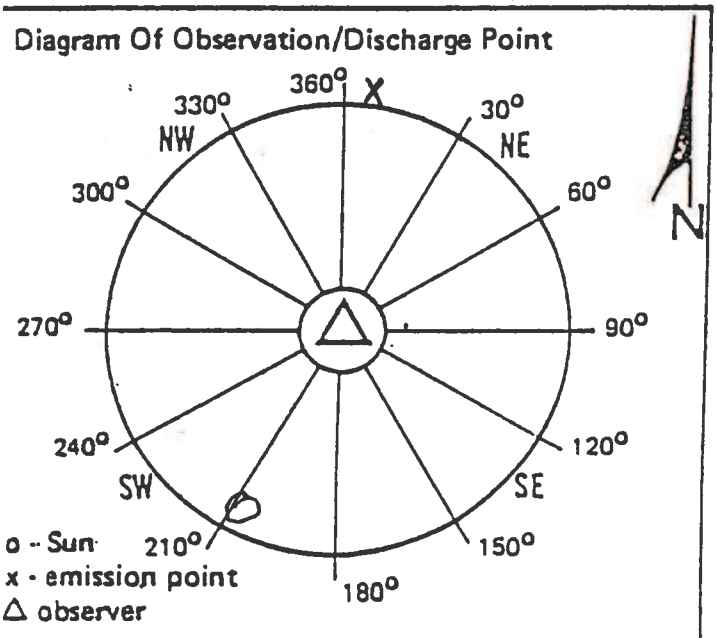

SET NO.	REMARKS
1	
2	STARTING UP NO 2 BOILER
3	

Received By: _____

Visible Emissions Evaluation Record

Plant Name: Hercules Inc

Address: West 7th Street

City: Hattiesburg

Emission Point: 010

Date: 7-12-85

Is emission point operation normal ?

V. E. Observer: Bobbie Draughn

Certification Expiration: 10-18-85

Set No.	Time		Opacity	
	Start	End	Sum	Average
1	1:00	1:06	865	36.0
2	1:06	1:12	1095	45.6
3	1:12	1:18	990	41.3

Overall Average: 41.0

	Initial	Final
Distance to discharge	2 Lengths	
Direction to discharge	N	
Height of observation point	Ground	
Height of discharge	225 feet	
Plume color	Gray	
Plume background	Blue Sky	
Water vapor in plume ?		
Wind direction (from)	SW	
Wind speed	10 mph	
Ambient temperature	93°	
Discharge temperature		
Sky conditions	Pc	

Min.	Seconds 0	15	30	45
0	40	40	35	35
1	35	35	30	30
2	30	30	30	30
3	35	35	40	40
4	35	40	50	50
5	40	40	30	30
0	40	50	40	40
1	40	60	60	50
2	60	60	50	50
3	40	40	40	40
4	40	50	40	50
5	40	40	35	40
0	40	50	45	45
1	40	40	45	45
2	40	40	40	40
3	40	40	35	35
4	40	40	40	40
5	40	50	40	40

Diagram Of Observation/Discharge Point

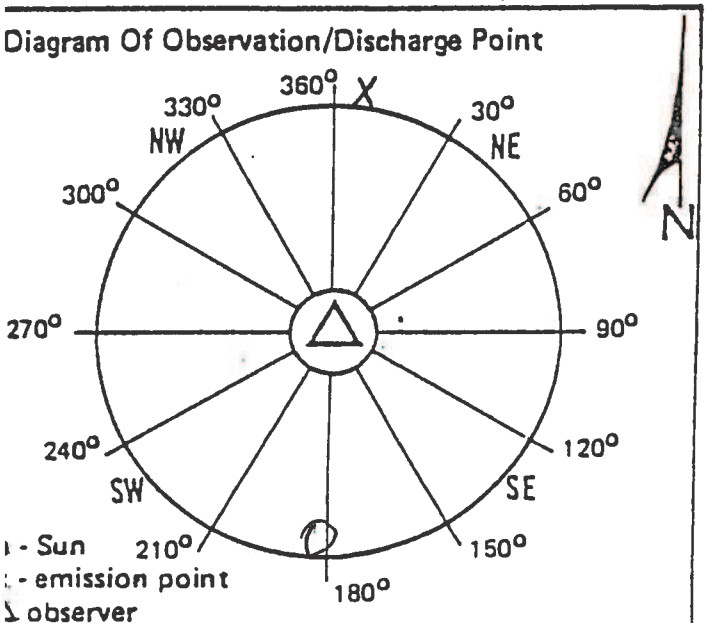

SET NO.	REMARKS
1	
2	
3	

Received By:

DATE 7-12-85

BOILER ROOM ENVIRONMENTAL LOG SHEET

Cleaned Fires		7 - 3 Shift	3 - 11 Shift	11 - 7 Shift
. 1 Boiler	Started			
	Stopped	1:20	7:00	4:05
. 2 Boiler	Started	1:20	3:20	
	Stopped			
. 3 Boiler	Started			
	Stopped	7:15	7:20	12:00
. 4 Boiler	Started	0:20	5:30	12:50
	Stopped			

mments on Boiler Operation

OPACITY EVALUATION - WOOD BURNING BOILERS

BOILER NO. 1			BOILER NO. 2			BOILER NO. 3			BOILER NO. 4		
ime	Duration	Note	Time	Duration	Note	Time	Duration	Note	Time	Duration	Note
									1:00	5-5	6

1. Cleaning Boile
2. Fuel Oil Adjustment
3. Load Changes
4. Meter Defect
5. Cleaning Meter Lenses
6. Wood

OMMENTS ON OPACITY & METER OPERATION

Visible Emissions Evaluation Record

Plant Name: Hercules Inc

Address: West 7th Street

City: Hattiesburg

Emission Point: 009

Date: 7-11-85

Is emission point operation normal ? _____

V. E. Observer: Bobbie Draughn

Certification Expiration: 10-18-85

Set No.	Time Start	Time End	Opacity Sum	Opacity Average
1	1^00	1^12	790	32.9
2	1^12	1^18	375	15.6
3	1^18	1^24	565	23.5

Overall Average: 24.0

	Initial	Final
Distance to discharge	2 Lengths	
Direction to discharge	N	
Height of observation point	Ground	
Height of discharge	200 feet	
Plume color	Gray	
Plume background	Gray Sky	
Water vapor in plume ?		
Wind direction (from)	SE	
Wind speed	10 mph	
Ambient temperature	96°	
Discharge temperature		
Sky conditions	Pc	

Diagram Of Observation/Discharge Point

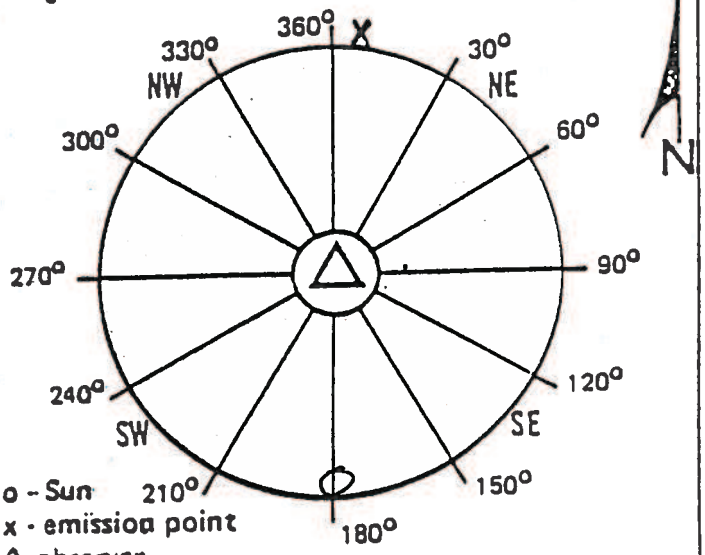

Min.	Seconds 0	15	30	45
0	10	10	5	5
1	20	30	30	30
2	30	60	50	60
3	50	50	40	40
4	50	50	50	20
5	30	30	20	20
0	20	20	10	10
1	10	10	10	10
2	10	10	15	15
3	15	15	10	10
4	10	20	20	25
5	30	20	25	25
0	40	40	40	50
1	50	50	60	60
2	60	40	10	5
3	5	5	5	5
4	5	5	5	5
5	5	5	5	5

SET NO.	REMARKS
1	
2	
3	

Received By: _____

Visible Emissions Evaluation Record

Plant Name: Hercules Inc

Address: West 7th Street

City: Hattiesburg

Emission Point: 010

Date: 7-11-85

Is emission point operation normal ? _____

V. E. Observer: Bobbie Draughn

Certification Expiration: 10-18-85

Set No.	Time		Opacity	
	Start	End	Sum	Average
1	1106	1112	1075	44.8
2	1112	1118	655	27.3
3	1118	1124	575	24.0

Overall Average: 32.0

	Initial	Final
Distance to discharge	2 Lengths	
Direction to discharge	N	
Height of observation point	Ground	
Height of discharge	225 feet	
Plume color	Gray	
Plume background	Gray Sky	
Water vapor in plume ?		
Wind direction (from)	SE	
Wind speed	10 mph	
Ambient temperature	96°	
Discharge temperature		
Sky conditions	Pc	

Min.	Seconds 0	15	30	45
0	30	30	35	40
1	35	35	50	50
2	50	50	40	40
3	40	40	60	50
4	40	40	60	60
5	40	50	60	50
0	40	40	30	30
1	35	35	25	25
2	25	25	30	30
3	25	20	20	25
4	25	25	20	25
5	25	25	25	25
0	20	20	15	15
1	20	20	20	20
2	20	20	20	20
3	20	15	15	15
4	25	25	25	25
5	40	40	50	50

Diagram Of Observation/Discharge Point

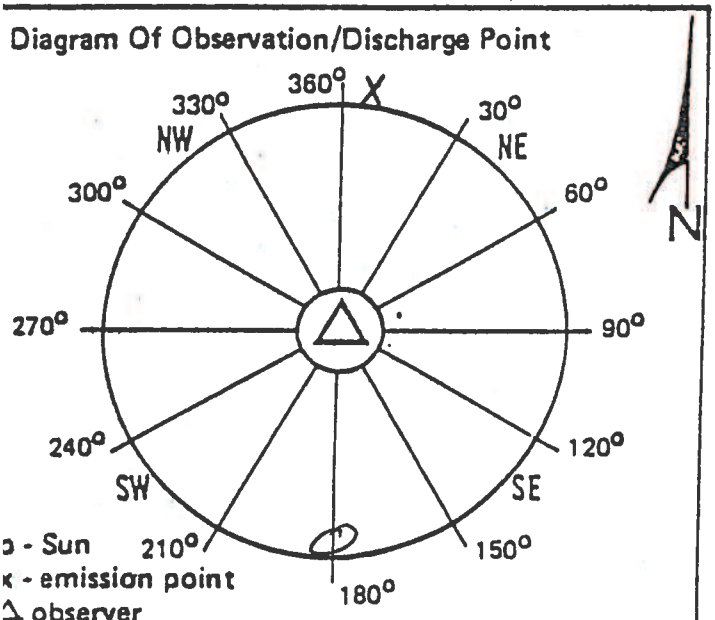

SET NO.	REMARKS
1	
2	
3	

Received By: _____

DATE _____

BOILER ROOM ENVIRONMENTAL LOG SHEET

Cleaned Fires		7 - 3 Shift	3 - 11 Shift	11 - 7 Shift
. 1 Boiler	Started			
	Stopped	11:20	5:30	
. 2 Boiler	Started	11:20		
	Stopped			
. 3 Boiler	Started			
	Stopped	7:20	2:3	
. 4 Boiler	Started	9:25	5:30	
	Stopped			

mments on Boiler Operation _____

OPACITY EVALUATION - WOOD BURNING BOILERS

BOILER NO. 1			BOILER NO. 2			BOILER NO. 3			BOILER NO. 4		
ime	Duration	Note	Time	Duration	Note	Time	Duration	Note	Time	Duration	Note
									730	10-5	3
									1220	10-5	2

1. Cleaning Boile
2. Fuel Oil Adjustment
3. Load Changes
4. Meter Defect
5. Cleaning Meter Lenses
6. Wood

OMMENTS ON OPACITY & METER OPERATION _____

Visible Emissions Evaluation Record

Plant Name: Hercules Inc

Address: West 7th Street

City: Hattiesburg

Emission Point: 009

Date: 7-3-85

Is emission point operation normal ? _____

V. E. Observer: Bobbie Draughn

Certification Expiration: 10-18-85

Set No.	Time		Opacity	
	Start	End	Sum	Average
1	9 51	9 57	930	38.8
2	9 57	10 03	830	34.6
3	10 03	10 09	940	39.2

Overall Average: 37.5

	Initial	Final
Distance to discharge	2 Lengths	
Direction to discharge	N	
Height of observation point	Ground	
Height of discharge	200 feet	
Plume color	Gray	
Plume background	Gray Sky	
Water vapor in plume ?		
Wind direction (from)	SW	
Wind speed	5-10 mph	
Ambient temperature	80°	
Discharge temperature		
Sky conditions	Cloudy	

Min.	Seconds 0	15	30	45
0	40	40	40	40
1	35	35	35	40
2	50	40	40	50
3	40	40	35	40
4	35	35	35	35
5	40	40	35	35
0	30	30	30	30
1	30	30	30	30
2	35	35	35	35
3	40	40	40	40
4	40	35	35	40
5	35	35	35	35
0	40	40	35	40
1	35	40	35	40
2	35	35	35	35
3	35	35	40	40
4	40	40	45	45
5	45	40	40	50

Diagram Of Observation/Discharge Point

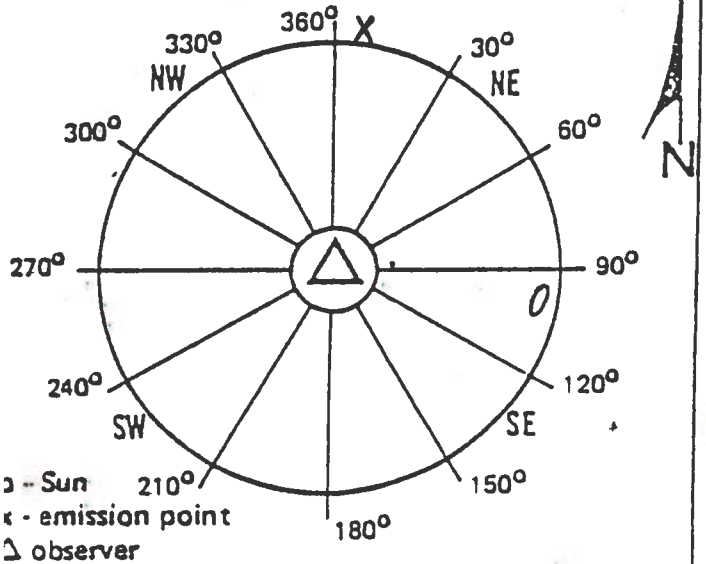

SET NO.	REMARKS
1	
2	
3	

Received By: _____

9/23/85

To: C.S. Jordan

From: R.A. Van Beek

Operating Permit No. 00800-00001 Hattiesburg, MS
Issued For The Operation of Air Emissions Equipment

In reference to the above permit, Part III, Other Requirements, 1-C,the following monthly report is for August, 1985.

The report details the complaince status of the boilers with copies of all visible emissions evaluations in which <u>any</u> reading exceeds 40% opacity.

Total number of VEE copies attached = 14.

In addition, copies of log sheets are attached for all visible emission evaluations when opacity exceeds 40% for two minutes or more.

Number of log sheets attached = 4.

R. A. Van Beek

Visible Emissions Evaluation Record

Plant Name: Hercules Inc

Address: West 7th Street

City: Hattiesburg

Emission Point: 010

Date: 8-23-85

Is emission point operation normal ? _____

V. E. Observer: Bobbie Draughn

Certification Expiration: 10-18-85*

	Initial	Final
Distance to discharge	2 Lengths	
Direction to discharge	N	
Height of observation point	Ground	
Height of discharge	225 feet	
Plume color	Gray	
Plume background	Gray Sky	
Water vapor in plume ?		
Wind direction (from)	SE	
Wind speed	5 mph	
Ambient temperature	93°	
Discharge temperature		
Sky conditions	Cloudy	

Set No.	Time		Opacity	
	Start	End	Sum	Average
1	1⁰⁹	1¹⁵	310	12.9
2	1¹⁵	1²¹	645	26.9
3	1²¹	1²⁷	405	16.9

Overall Average: 18.9

Min.	Seconds 0	15	30	45
0	15	15	15	15
1	15	15	10	10
2	15	15	15	15
3	15	15	15	10
4	15	10	10	10
5	10	10	10	10
0	10	10	10	10
1	10	15	15	10
2	40	60	50	40
3	40	40	40	40
4	35	35	25	25
5	25	20	20	20
0	20	15	15	20
1	20	20	20	20
2	15	15	15	15
3	15	15	15	15
4	20	20	15	15
5	20	20	15	10

Diagram Of Observation/Discharge Point

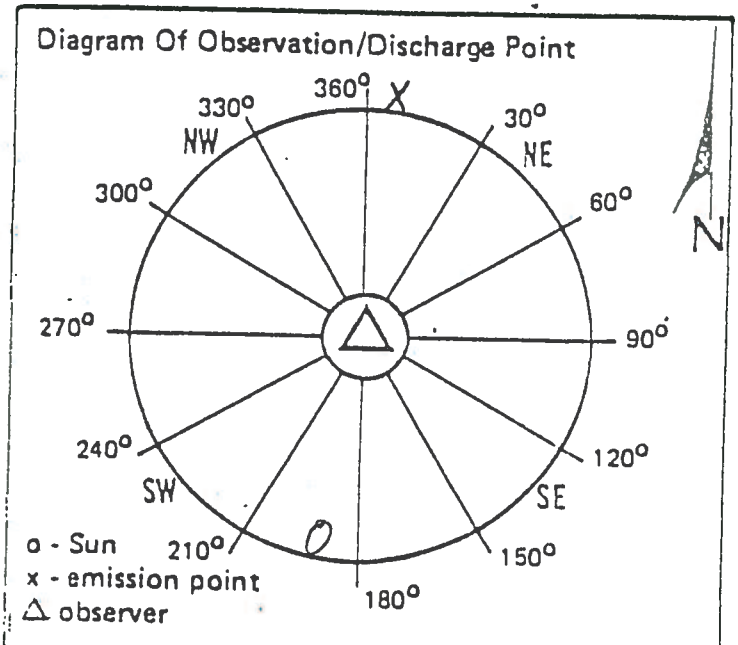

SET NO.	REMARKS
1	
2	
3	

Received By: _____

Visible Emissions Evaluation Record

Plant Name: Hercules Inc

Address: West 7th Street

City: Hattiesburg

Emission Point: 010

Date: 8-21-85

Is emission point operation normal ? _____

V. E. Observer: Bobbie Draughn

Certification Expiration: 10-18-85

Set No.	Time		Opacity	
	Start	End	Sum	Average
1	1⁰⁵	1¹¹	430	17.9
2	1¹¹	1¹⁷	580	24.2
3	1¹⁷	1²³	895	37.3

Overall Average: 26.5

	Initial	Final
Distance to discharge	2 Lengths	
Direction to discharge	N	
Height of observation point	Ground	
Height of discharge	225 feet	
Plume color	Gray	
Plume background	Gray	Sky
Water vapor in plume ?		
Wind direction (from)	NW	
Wind speed	10 mph	
Ambient temperature	89°	
Discharge temperature		
Sky conditions	Pc	

Diagram Of Observation/Discharge Point

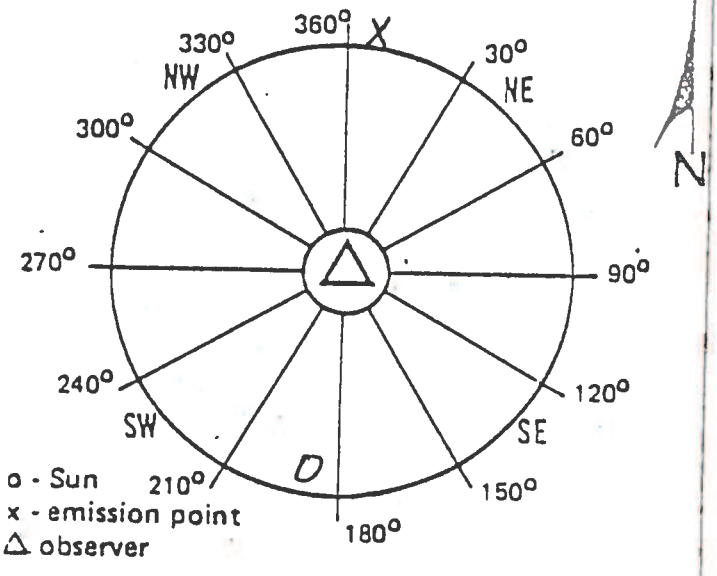

Min.	Seconds 0	15	30	45
0	20	20	20	20
1	20	20	15	15
2	20	20	20	20
3	20	20	15	10
4	10	10	15	20
5	20	20	20	20
0	15	15	20	20
1	15	15	20	15
2	15	15	10	10
3	15	20	20	20
4	25	25	30	30
5	40	50	60	60
0	55	50	50	50
1	45	40	40	45
2	40	40	35	35
3	30	30	30	30
4	30	30	35	20
5	30	30	35	40

SET NO.	REMARKS
1	
2	
3	

Received By: _____

DATE 8-21-85

BOILER ROOM ENVIRONMENTAL LOG SHEET

Cleaned Fires		7 - 3 Shift	3 - 11 Shift	11 - 7 Shift
No. 1 Boiler	Started			
	Stopped			
No. 2 Boiler	Started			
	Stopped			
No. 3 Boiler	Started	7:00	3:00	11:55
	Stopped	9:15	4:30	12:45
No. 4 Boiler	Started			
	Stopped			

Comments on Boiler Operation

OPACITY EVALUATION - WOOD BURNING BOILERS

BOILER NO. 1			BOILER NO. 2			BOILER NO. 3			BOILER NO. 4			
Time	Duration	Note	Time	Duration	Note	Time	Duration	Note	Time	Duration	Note	1. Cleaning Boile
						1311	3	7				2. Fuel Oil Adjustment
												3. Load Changes
												4. Meter Defect
												5. Cleaning Meter Lenses
												6. Wood
												7. Residue

COMMENTS ON OPACITY & METER OPERATION

Plant Name: Hercules Inc

Address: West 7th Street

City: Hattiesburg

Emission Point: 010

Date: 8-19-85

Is emission point operation normal ? _____

V. E. Observer: Bobbie Draughn

Certification Expiration: 10-18-85

Set No.	Time		Opacity	
	Start	End	Sum	Average
1	2^00	2^0L	400	16.7
2	2^0L	2^12	755	31.5
3	2^12	2^18	935	39.0

Overall Average: 29.1

	Initial	Final
Distance to discharge	2 Lengths	
Direction to discharge	N	
Height of observation point	Ground	
Height of discharge	225 feet	
Plume color	Gray	
Plume background	Gray Sky	
Water vapor in plume ?		
Wind direction (from)	SW	
Wind speed	5-10 mph	
Ambient temperature	92°	
Discharge temperature		
Sky conditions	Pc	

	Seconds			
Min.	0	15	30	45
0	20	20	20	20
1	20	25	25	10
2	10	10	15	15
3	15	15	15	15
4	15	15	20	20
5	15	15	15	15
0	20	20	20	20
1	20	20	20	20
2	25	30	25	25
3	25	25	40	40
4	40	40	50	40
5	50	45	45	50
0	40	40	40	50
1	40	35	35	40
2	40	40	35	35
3	35	40	40	40
4	35	40	40	35
5	40	40	40	40

Diagram Of Observation/Discharge Point

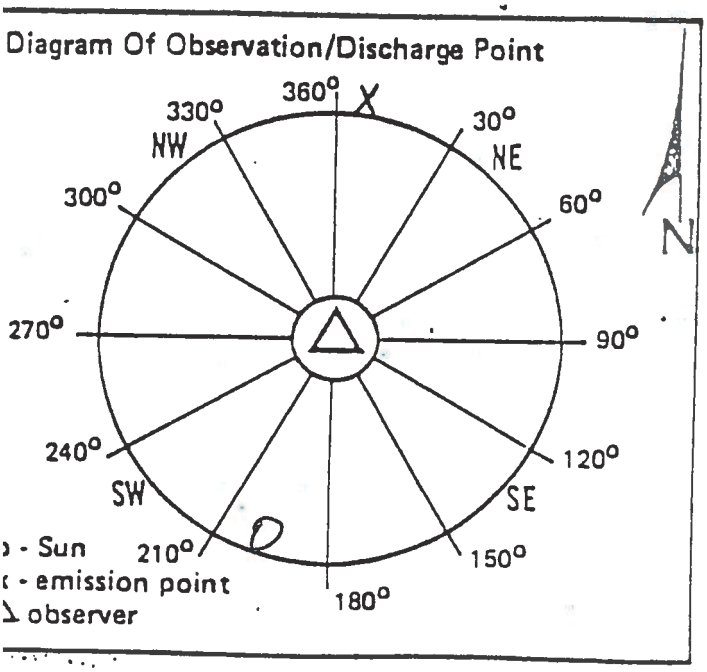

SET NO.	REMARKS
1	
2	
3	

Received By: _____

Bureau of Pollution Control
Visible Emissions Evaluation Record

Plant Name: Hercules Inc
Address: West 7th Street
City: Hattiesburg
Emission Point: 010
Date: 8-16-85
Is emission point operation normal ? _____

V. E. Observer: Bobbie Draughn
Certification Expiration: 10-18-85

Set No.	Time		Opacity	
	Start	End	Sum	Average
1	10^{10}	10^{16}	150	6.3
2	10^{16}	10^{22}	560	23.3
3	10^{22}	10^{28}	160	6.7

Overall Average: 12.1

	Initial	Final
Distance to discharge	2 Lengths	
Direction to discharge	N	
Height of observation point	Ground	
Height of discharge	225 feet	
Plume color	Gray	
Plume background	Gray Sky	
Water vapor in plume ?		
Wind direction (from)	SW	
Wind speed	10 mph	
Ambient temperature	77°	
Discharge temperature		
Sky conditions	Raining	

Diagram Of Observation/Discharge Point

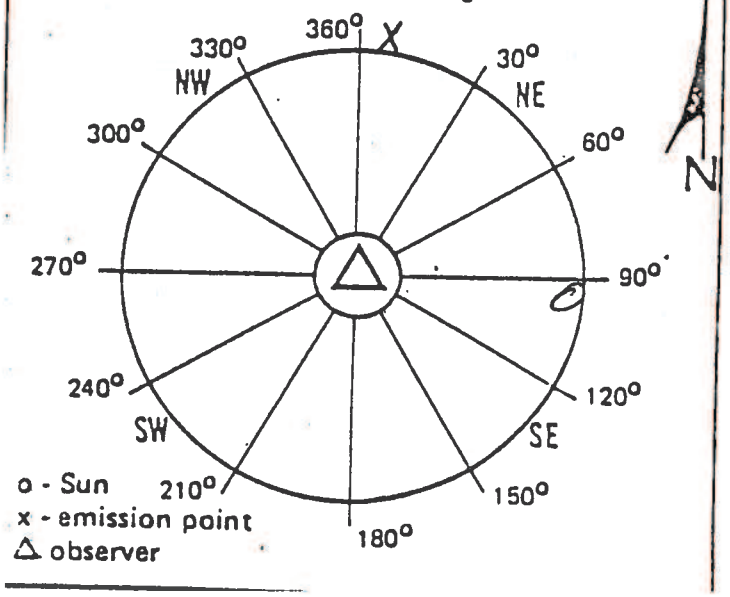

Min.	Seconds 0	15	30	45
0	10	10	5	5
1	5	5	5	5
2	5	5	5	5
3	5	5	5	5
4	5	5	5	5
5	5	5	15	15
0	20	40	50	70
1	70	50	50	40
2	30	20	15	10
3	10	10	5	10
4	10	10	10	10
5	5	5	5	5
0	5	5	5	5
1	5	5	5	5
2	5	5	10	10
3	5	5	5	5
4	5	5	10	10
5	10	10	10	10

SET NO.	REMARKS
1	
2	
3	

Received By: _____

Visible Emissions Evaluation Record

Plant Name: Hercules Inc

Address: West 7th Street

City: Hattiesburg

Emission Point: 009

Date: 8-14-85

Is emission point operation normal ? _____

V. E. Observer: Bobbie Draughn

Certification Expiration: 10-18-85

Set No.	Time		Opacity	
	Start	End	Sum	Average
1	200	206	235	9.8
2	206	212	160	6.7
3	212	218	790	32.9

Overall Average: 16.5

	Initial	Final
Distance to discharge	2 Lengths	
Direction to discharge	N	
Height of observation point	Ground	
Height of discharge	200 feet	
Plume color	Gray	
Plume background	Gray Sky	
Water vapor in plume ?		
Wind direction (from)	SE	
Wind speed	5-10 mph	
Ambient temperature	85°	
Discharge temperature		
Sky conditions	Cloudy	

Diagram Of Observation/Discharge Point

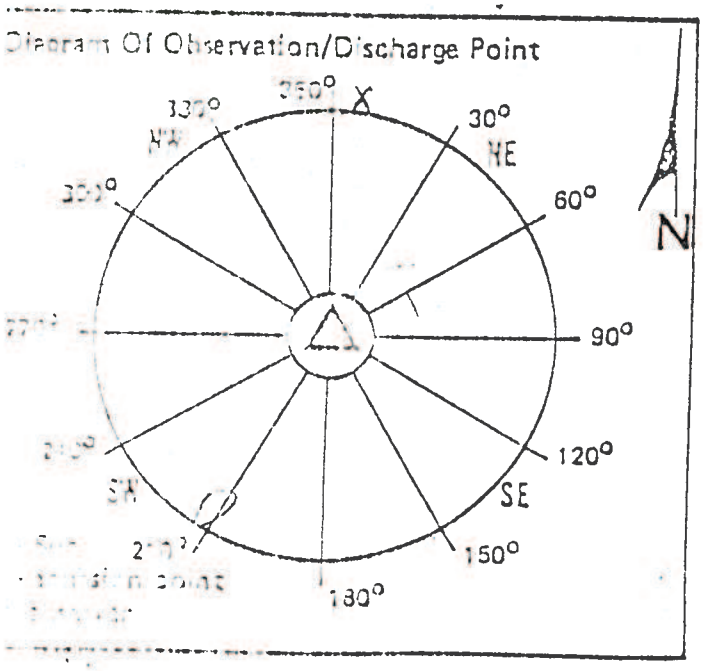

Min.	Seconds 0	15	30	45
0	10	10	10	10
1	15	15	10	10
2	10	10	10	10
3	10	10	10	10
4	10	10	10	10
5	10	5	5	5
0	5	5	5	5
1	5	5	5	5
2	5	5	5	5
3	5	5	10	10
4	10	10	5	5
5	5	5	5	25
0	35	30	30	30
1	30	30	30	30
2	30	30	30	30
3	30	35	35	35
4	40	40	45	45
5	30	30	30	30

SET NO.	REMARKS
1	
2	
3	

Received By: _____

Visible Emissions Evaluation Record

Plant Name: Hercules Inc

Address: West 7th Street

City: Hattiesburg

Emission Point: 009

Date: 8-13-85

Is emission point operation normal ? _____

V. E. Observer: Bobbie Draughn

Certification Expiration: 10-18-85

Set No.	Time		Opacity	
	Start	End	Sum	Average
1	9 55	10 01	850	35.4
2	10 01	10 07	955	39.8
3	10 07	10 13	690	28.8

Overall Average: 34.7

	Initial	Final
Distance to discharge	2 Lengths	
Direction to discharge	N	
Height of observation point	Ground	
Height of discharge	200 feet	
Plume color	Gray	
Plume background	Blue Sky	
Water vapor in plume ?		
Wind direction (from)	SE	
Wind speed	5-10 mph	
Ambient temperature	86	
Discharge temperature		
Sky conditions	Pc	

Min.	Seconds 0	15	30	45
0	40	40	35	35
1	40	40	40	40
2	40	40	40	40
3	35	35	35	35
4	30	30	30	40
5	30	30	25	25
0	30	40	40	40
1	35	40	40	50
2	40	40	40	40
3	35	35	40	45
4	35	40	40	50
5	40	40	40	40
0	40	40	50	40
1	35	40	40	40
2	40	35	30	30
3	30	30	25	25
4	20	15	10	10
5	15	20	15	15

Diagram Of Observation/Discharge Point

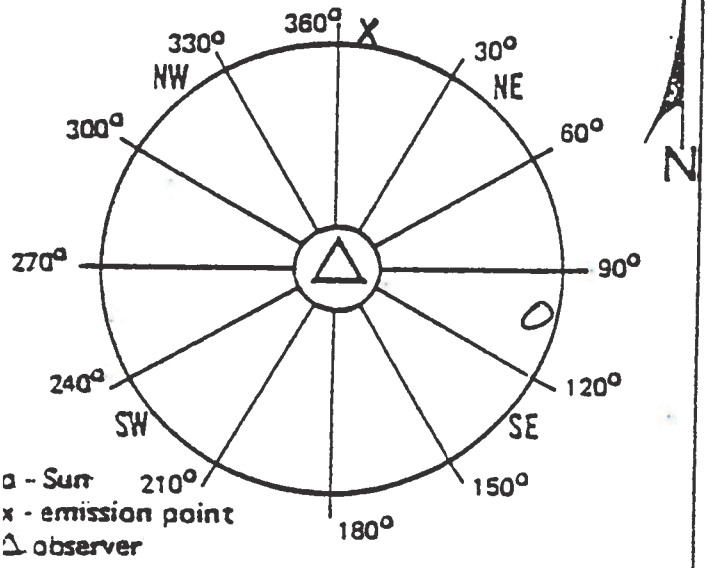

□ - Sum
x - emission point
Δ observer

SET NO.	REMARKS
1	
2	
3	

Received By: _____

Bureau of Pollution Control
Visible Emissions Evaluation Record

Plant Name: Hercules Inc
Address: West 7th Street
City: Hattiesburg
Emission Point: 009
Date: 8-9-85
Is emission point operation normal ? _____

V. E. Observer: Bobbie Draughn
Certification Expiration: 10-18-85

Set No.	Time		Opacity	
	Start	End	Sum	Average
1	7^{42}	7^{45}	870	36.3
2	7^{48}	7^{54}	905	37.7
3	7^{54}	8^{00}	925	38.5

Overall Average: 37.5

	Initial	Final
Distance to discharge	2 Lengths	
Direction to discharge	N	
Height of observation point	Ground	
Height of discharge	200 feet	
Plume color	Gray	
Plume background	Blue Sky	
Water vapor in plume ?		
Wind direction (from)	NW	
Wind speed	5 mph	
Ambient temperature	76°	
Discharge temperature		
Sky conditions	Clear	

	Seconds			
Min.	0	15	30	45
0	40	40	40	40
1	40	40	40	40
2	35	40	35	35
3	35	35	30	35
4	35	35	35	35
5	30	30	35	35
0	30	30	30	30
1	35	35	30	30
2	30	30	30	30
3	35	35	50	50
4	50	50	45	50
5	45	45	40	40
0	40	40	40	40
1	40	40	50	50
2	40	35	35	40
3	35	35	35	35
4	35	40	35	35
5	35	35	40	40

Diagram Of Observation/Discharge Point

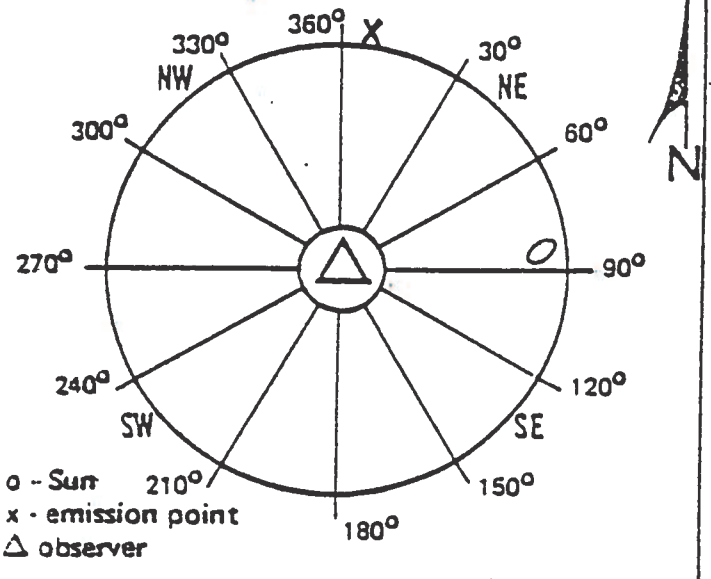

SET NO.	REMARKS
1	
2	
3	

Received By: _____

DATE 8/7/85

BOILER ROOM ENVIRONMENTAL LOG SHEET

Cleaned Fires		7 - 3 Shift	3 - 11 Shift	11 - 7 Shift
No. 1 Boiler	Started	12:30	8:45	3:15
	Stopped	2:10	12:45	6:30
No. 2 Boiler	Started			
	Stopped			
No. 3 Boiler	Started	7:00	3:20	11:10
	Stopped	9:33	5:15	12:30
No. 4 Boiler	Started	12:22	5:53	1:00
	Stopped	1:50	8:00	2:10

Comments on Boiler Operation

OPACITY EVALUATION - WOOD BURNING BOILERS

BOILER NO. 1			BOILER NO. 2			BOILER NO. 3			BOILER NO. 4		
Time	Duration	Note	Time	Duration	Note	Time	Duration	Note	Time	Duration	Note
7:22	5 sec.	(3)				2:31	5 Sec.	(3)	11:21	10 Sec.	(2)
4:50	3 Sec.	(1)				7:53	8 Sec.	(3)	1:30	4 Sec.	(3)
3:23	7 Sec.	(2)									

1. Cleaning Boile
2. Fuel Oil Adjustment
3. Load Changes
4. Meter Defect
5. Cleaning Meter Lenses
6. Wood

COMMENTS ON OPACITY & METER OPERATION

Bureau of Pollution Control
Visible Emissions Evaluation Record

Plant Name: Hercules Inc
Address: West 7th Street
City: Hattiesburg
Emission Point: 010
Date: 8-9-85
Is emission point operation normal ?

V. E. Observer: Bobbie Draughn
Certification Expiration: 10-18-85

Set No.	Time		Opacity	
	Start	End	Sum	Average
1	7^{42}	7^{48}	910	37.9
2	7^{48}	7^{54}	890	37.1
3	7^{54}	8^{00}	950	39.6

Overall Average: 38.2

	Initial	Final
Distance to discharge	2 Lengths	
Direction to discharge	N	
Height of observation point	Ground	
Height of discharge	225 feet	
Plume color	Gray	
Plume background	Blue Sky	
Water vapor in plume ?		
Wind direction (from)	NW	
Wind speed	5 mph	
Ambient temperature	76°	
Discharge temperature		
Sky conditions	Clear	

	Seconds			
Min.	0	15	30	45
0	40	40	40	40
1	40	40	35	35
2	35	35	35	35
3	35	35	35	35
4	40	40	40	40
5	40	40	40	40
0	35	35	35	35
1	35	35	35	35
2	35	35	40	40
3	40	40	40	50
4	40	45	40	35
5	30	30	35	35
0	40	40	40	40
1	45	45	40	40
2	35	35	35	40
3	40	35	40	40
4	40	40	40	40
5	40	40	40	40

Diagram Of Observation/Discharge Point

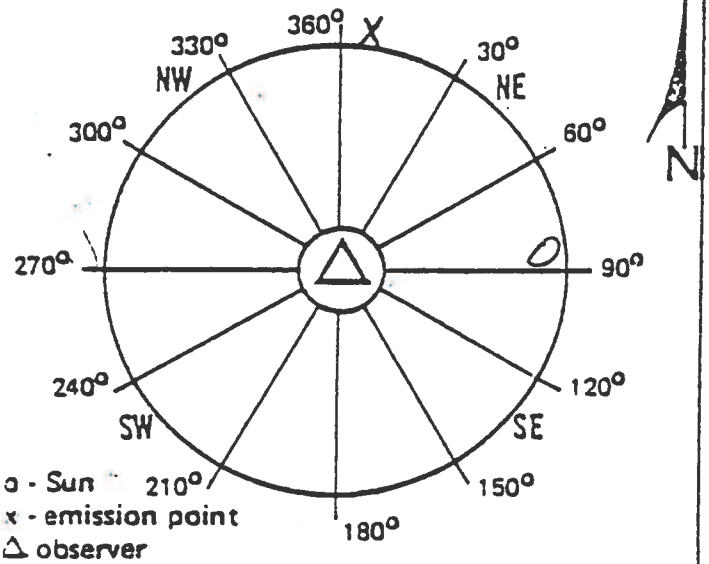

SET NO.	REMARKS
1	
2	
3	

Received By:

Bureau of Pollution Control
Visible Emissions Evaluation Record

Plant Name: Hercules Inc.

Address: West 7th Street

City: Hattiesburg

Emission Point: 010

Date: 8-8-85

Is emission point operation normal ? _____

V. E. Observer: Bobbie Draughn

Certification Expiration: 10-18-85

Set No.	Time		Opacity	
	Start	End	Sum	Average
1	8^08	8^14	340	14.2
2	8^14	8^20	640	26.7
3	8^20	8^26	880	36.7

Overall Average: 25.9

	Initial	Final
Distance to discharge	2 Lengths	
Direction to discharge	N	
Height of observation point	Ground	
Height of discharge	225 feet	
Plume color	Gray	
Plume background	Blue Sky	
Water vapor in plume ?		
Wind direction (from)	NW	
Wind speed	5mph	
Ambient temperature	77°	
Discharge temperature		
Sky conditions	Clear	

Min.	Seconds 0	15	30	45
0	15	15	15	15
1	20	20	20	20
2	20	15	15	15
3	15	10	10	10
4	15	15	10	10
5	10	10	10	10
0	10	10	10	10
1	25	25	30	30
2	35	35	35	30
3	35	30	30	30
4	30	30	30	30
5	30	30	25	25
0	25	20	25	25
1	25	25	30	30
2	30	30	35	40
3	40	40	45	45
4	45	45	45	45
5	45	45	50	50

Diagram Of Observation/Discharge Point

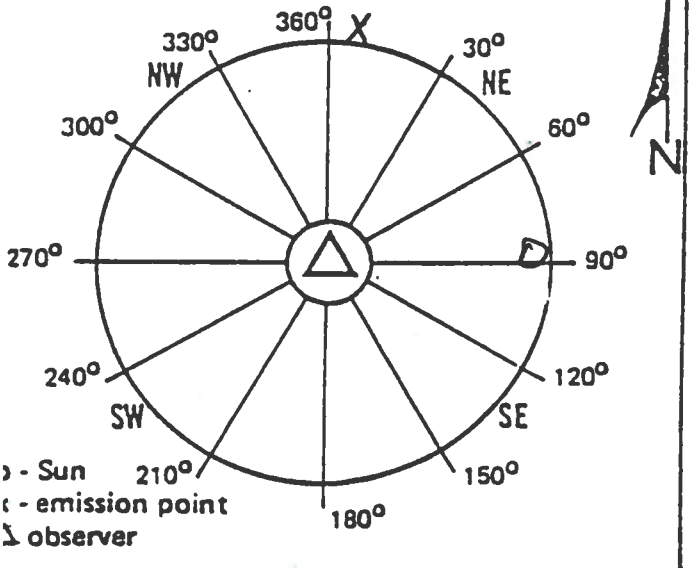

SET NO.	REMARKS
1	
2	
3	

Received By: _____

DATE 2/12/85

BOILER ROOM ENVIRONMENTAL LOG SHEET

Cleaned Fires		7 - 3 Shift	3 - 11 Shift	11 - 7 Shift
No. 1 Boiler	Started	12:30	8:30	4:50
	Stopped	2:50	9:50	
No. 2 Boiler	Started		X	
	Stopped			
No. 3 Boiler	Started	7:00	3:00	11:15
	Stopped	8:45	5:30	12:25
No. 4 Boiler	Started	9:30	6:00	1:20
	Stopped	11:50	9:00	2:40

Comments on Boiler Operation

OPACITY EVALUATION - WOOD BURNING BOILERS

BOILER NO. 1			BOILER NO. 2			BOILER NO. 3			BOILER NO. 4		
Time	Duration	Note	Time	Duration	Note	Time	Duration	Note	Time	Duration	Note
10:39	10-5	3				8	20-5	3	3:05	30-5	3

1. Cleaning Boile
2. Fuel Oil Adjustment
3. Load Changes
4. Meter Defect
5. Cleaning Meter Lenses
6. Wood

COMMENTS ON OPACITY & METER OPERATION

Bureau of Pollution Control
isible Emissions Evaluation Record

lant Name: Hercules Inc
ddress: West 7th Street
ity: Hattiesburg
mission Point: 009
ate: 8-8-85
emission point operation normal ? _____

V. E. Observer: Bobbie Draughn
Certification Expiration: 10-18-85

Set No.	Time		Opacity	
	Start	End	Sum	Average
1	8^{08}	8^{14}	740	30.8
2	8^{14}	8^{20}	900	37.5
3	8^{20}	8^{20}	505	21.0

Overall Average: 29.8

	Initial	Final
istance to discharge	2 Lengths	
irection to discharge	N	
eight of observation point	Ground	
eight of discharge	200 feet	
ume color	Gray	
ume background	Blue Sky	
ater vapor in plume ?		
ind direction (from)	NW	
ind speed	5mph	
mbient temperature	77°	
ischarge temperature		
ty conditions	Clear	

Min.	Seconds 0	15	30	45
0	25	25	25	25
1	25	30	30	35
2	40	35	35	35
3	30	30	30	30
4	30	30	35	35
5	25	25	35	40
0	35	35	40	40
1	40	50	50	40
2	40	40	50	45
3	45	55	55	50
4	45	40	30	15
5	15	15	15	15
0	15	20	25	25
1	20	20	20	20
2	20	20	20	30
3	25	25	20	20
4	20	20	20	20
5	20	20	20	20

Diagram Of Observation/Discharge Point

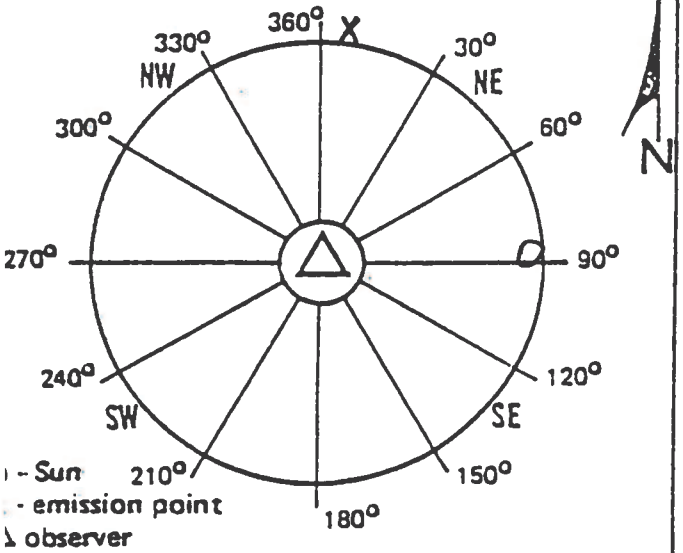

SET NO.	REMARKS
1	
2	
3	

Received By: _____

Bureau of Pollution Control
Visible Emissions Evaluation Record

lant Name: Hercules Inc
ddress: West 7th Street
ity: Hattiesburg
mission Point: 009
ate: 8-6-85
emission point operation normal ? _____

V. E. Observer: Bobbie Draughn
Certification Expiration: 10-18-85

Set No.	Time		Opacity	
	Start	End	Sum	Average
1	1:21	1:27	250	10.4
2	1:27	1:33	750	31.3
3	1:33	1:39	415	17.3

Overall Average: 19.7

	Initial	Final
istance to discharge	2 Lengths	
irection to discharge	N	
eight of observation point	Ground	
eight of discharge	200 feet	
ume color	Gray	
ume background	Gray Sky	
ater vapor in plume ?		
ind direction (from)	SE	
ind speed	10 mph	
mbient temperature	90°	
scharge temperature		
y conditions	Pc	

Diagram Of Observation/Discharge Point

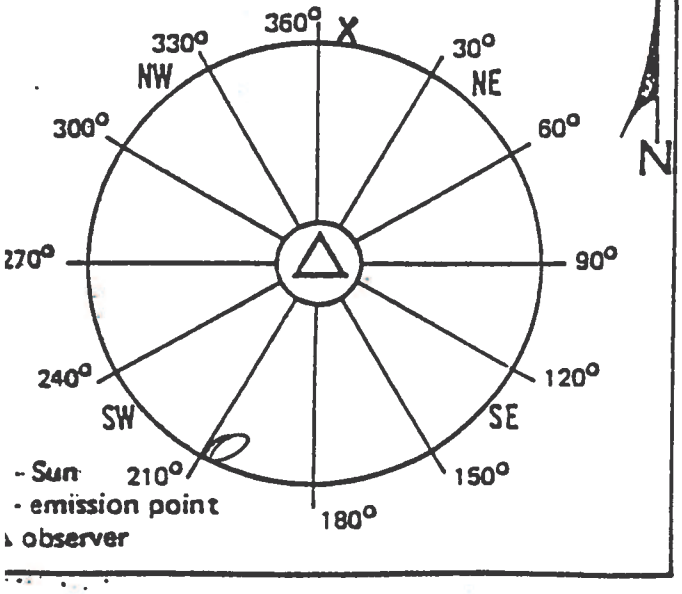

Min.	Seconds 0	15	30	45
0	10	10	15	15
1	10	10	10	10
2	10	10	10	10
3	10	10	10	10
4	10	10	10	10
5	10	10	10	10
0	10	5	5	5
1	5	5	5	5
2	80	90	100	100
3	90	50	25	25
4	15	15	20	20
5	15	20	20	20
0	10	10	5	5
1	5	5	5	5
2	5	5	5	5
3	5	5	5	5
4	5	5	5	55
5	60	65	70	60

SET NO.	REMARKS
1	
2	
3	

Received By: _____

Visible Emissions Evaluation Record

Plant Name: Hercules Inc

Address: West 7th Street

City: Hattiesburg

Emission Point: 009

Date: 8-2-85

Is emission point operation normal ? _____

V. E. Observer: Bobbie Draughn

Certification Expiration: 10-18-85

Set No.	Time		Opacity	
	Start	End	Sum	Average
1	10^{35}	10^{41}	120	5.0
2	10^{41}	10^{47}	120	5.0
3	10^{47}	10^{53}	380	15.8

Overall Average: 8.6

	Initial	Final
Distance to discharge	2 Lengths	
Direction to discharge	N	
Height of observation point	Ground	
Height of discharge	200 feet	
Plume color	Gray	
Plume background	Gray Sky	
Water vapor in plume ?		
Wind direction (from)	W	
Wind speed	10-15 mph	
Ambient temperature	88°	
Discharge temperature		
Sky conditions	Pc	

Min.	Seconds 0	15	30	45
0	5	5	5	5
1	5	5	5	5
2	5	5	5	5
3	5	5	5	5
4	5	5	5	5
5	5	5	5	5
0	5	5	5	5
1	5	5	5	5
2	5	5	5	5
3	5	5	5	5
4	5	5	5	5
5	5	5	5	5
0	5	5	5	5
1	5	5	5	5
2	10	10	10	10
3	10	10	10	10
4	10	20	20	40
5	35	35	50	50

Diagram Of Observation/Discharge Point

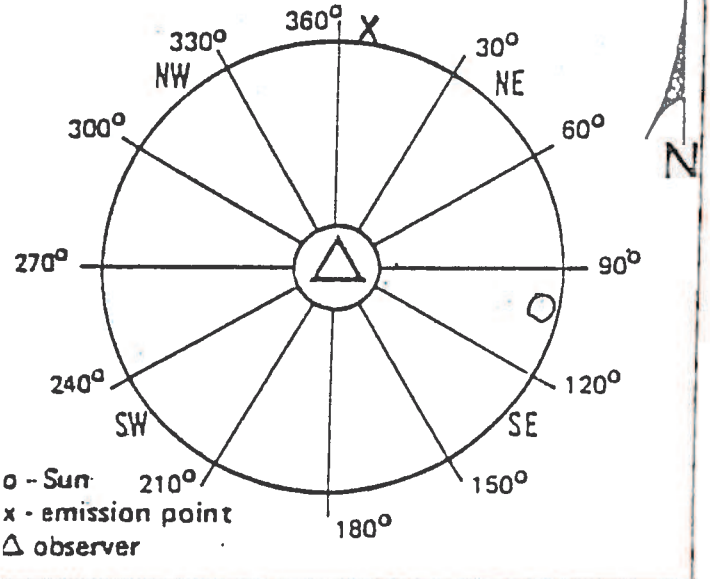

o - Sun
x - emission point
Δ observer

SET NO.	REMARKS
1	
2	
3	

Received By: _____

Visible Emissions Evaluation Record

Plant Name: Hercules Inc.

Address: West 7th Street

City: Hattiesburg

Emission Point: 009

Date: 8-1-85

Is emission point operation normal ? _____

V. E. Observer: Bobbie Draughn

Certification Expiration: 10-18-85

Set No.	Time		Opacity	
	Start	End	Sum	Average
1	9 21	9 27	1550	64.6
2	9 27	9 33	1740	72.5
3	9 33	9 39	1670	69.6

Overall Average: 68.9

	Initial	Final
Distance to discharge	2 Lengths	
Direction to discharge	N	
Height of observation point	Ground	
Height of discharge	200 feet	
Plume color	Gray	
Plume background	Blue Sky	
Water vapor in plume ?		
Wind direction (from)	W	
Wind speed	5-10 mph	
Ambient temperature	87°	
Discharge temperature		
Sky conditions	Clear	

Min.	Seconds 0	15	30	45
0	50	50	70	70
1	70	70	60	70
2	70	70	70	70
3	60	60	60	70
4	60	60	60	60
5	60	70	70	70
0	80	80	80	80
1	70	70	80	80
2	70	80	80	70
3	80	70	70	70
4	70	70	70	60
5	60	60	70	70
0	70	70	70	70
1	70	80	70	70
2	70	70	70	70
3	60	60	70	70
4	70	70	70	70
5	70	70	70	70

Diagram Of Observation/Discharge Point

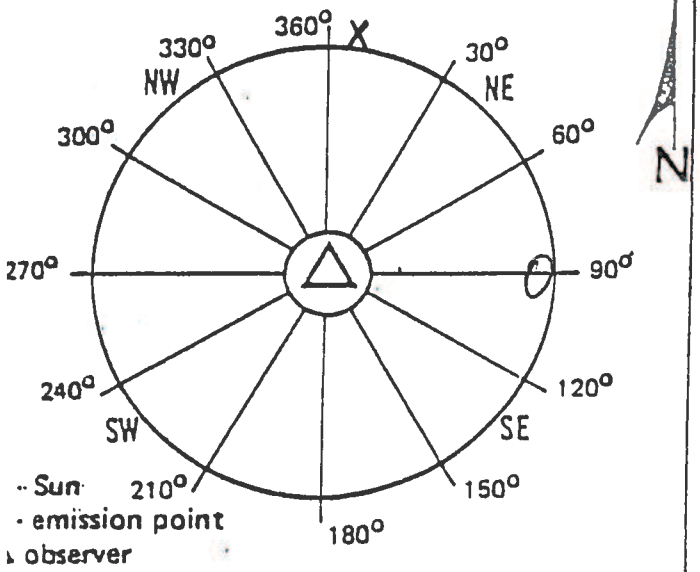

SET NO.	REMARKS
1	
2	
3	

Received By: _____

...sible Emissions Evaluation Record

Plant Name: Hercules Inc

Address: West 7th Street

City: Hattiesburg

Emission Point: 009

Date: 8-1-85

Is emission point operation normal ? _____

V. E. Observer: Bobbie Draughn

Certification Expiration: 10-18-85

Set No.	Time Start	Time End	Opacity Sum	Opacity Average
1	9^{21}	9^{27}	1550	64.6
2	9^{27}	9^{33}	1740	72.5
3	9^{33}	9^{39}	1670	69.6

Overall Average: 68.9

	Initial	Final
Distance to discharge	2 Lengths	
Direction to discharge	N	
Height of observation point	Ground	
Height of discharge	200 feet	
Plume color	Gray	
Plume background	Blue Sky	
Water vapor in plume ?		
Wind direction (from)	W	
Wind speed	5-10 mph	
Ambient temperature	87°	
Discharge temperature		
Sky conditions	Clear	

Min.	Seconds 0	15	30	45
0	50	50	70	70
1	70	70	60	70
2	70	70	70	70
3	60	60	60	70
4	60	60	60	60
5	60	70	70	70
0	80	80	80	80
1	70	70	80	80
2	70	80	80	70
3	80	70	70	70
4	70	70	70	60
5	60	60	70	70
0	70	70	70	70
1	70	80	70	70
2	70	70	70	70
3	60	60	70	70
4	70	70	70	70
5	70	70	70	70

Diagram Of Observation/Discharge Point

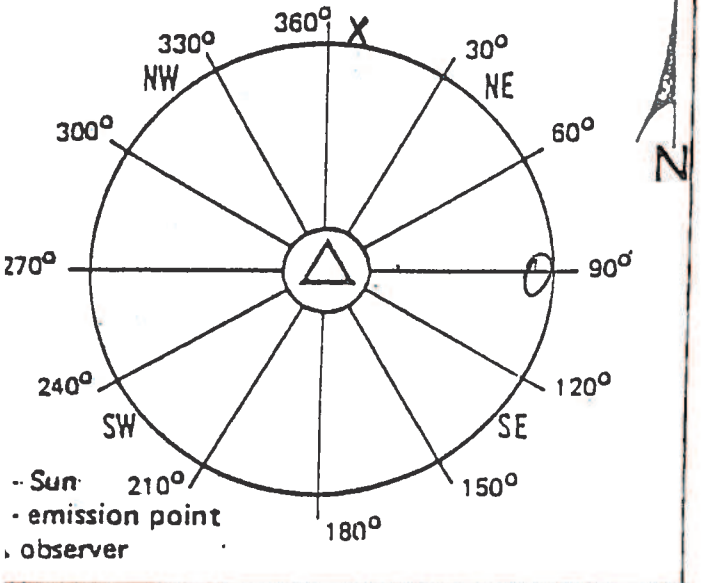

SET NO.	REMARKS
1	Starting up boiler & Too much Rosin in boiler
2	Too much wood in boiler. Saw Dust and
3	I.D. fans Kicking off.

Received By: _____

DATE 8/1/85

BOILER ROOM ENVIRONMENTAL LOG SHEET

Cleaned Fires		7 - 3 Shift	3 - 11 Shift	11 - 7 Shift
	Started	—		2:00
o. 1 Boiler	Stopped	—		2:30
	Started	—		
o. 2 Boiler	Stopped	—		
	Started	8:00		11:30
o. 3 Boiler	Stopped	7:15		12:25
	Started	12:30		12:50
o. 4 Boiler	Stopped	1:50		1:50

omments on Boiler Operation

OPACITY EVALUATION - WOOD BURNING BOILERS

BOILER NO. 1			BOILER NO. 2			BOILER NO. 3			BOILER NO. 4		
ime	Duration	Note	Time	Duration	Note	Time	Duration	Note	Time	Duration	Note
15	3	7	8:15	?	7	305	5-M	7			
			12:01	6 M	7						

1. Cleaning Boile
2. Fuel Oil Adjustment
3. Load Changes
4. Meter Defect
5. Cleaning Meter Lenses
6. Wood
7. Starting up Boiler

OMMENTS ON OPACITY & METER OPERATION

Hercules Incorporated
West 7th Street
P.O. Box 1937
Hattiesburg, MS 39401
(601) 545-3450

July 24, 1985

Mr. Dwight K. Wylie, P.E. Chief
Air Division
Bureau of Pollution Control
P. O. Box 10385
Jackson, Mississippi 39209

Dear Mr. Wylie:

In reference to operating permit No. 0800-0001, please find the attached monthly report detailing the compliance status of the boilers for emission points 009 and 010.

We will continue to submit this report on a monthly basis.

Very truly yours,

Charles Jordan
Environmental Supervisor

CSJ:sw

Attachments

7/24/85

To: C.S. Jordan

From: R.A. Van Beek

Operating Permit No. 00800-00001 Hattiesburg, MS
Issued For The Operation of Air Emissions Equipment

In reference to the above permit, Part III, Other Requirements, 1-C, the following monthly report is for June, 1985.

The report details the complaince status of the boilers with copies of all visible emissions evaluations in which <u>any</u> reading exceeds 40% opacity.

Total number of VEE copies attached = 5.

In addition, copies of log sheets are attached for all visible emission evaluations when opacity exceeds 40% for two minutes or more.

Number of log sheets attached = 3.

Mississippi Department of ...
Bureau of Pollution Control
Visible Emissions Evaluation Record

lant Name: Hercules Inc.
ddress: West 7th Street
ity: Hattiesburg
mission Point: 010
ate: 6-5-85
emission point operation normal ?

V. E. Observer: Bobbie Draughon
Certification Expiration: 10-18-85

Set No.	Time Start	Time End	Opacity Sum	Opacity Average
	10^{25}	10^{31}	760	31.7
	10^{31}	10^{37}	770	32.1
	10^{37}	10^{43}	875	36.5

Overall Average: 33.4

	Initial	Final
istance to discharge	2 Lengths	
irection to discharge	N	
eight of observation point	Ground	
eight of discharge	225 feet	
lume color	Gray	
lume background	Blue Sky	
/ater vapor in plume ?		
/ind direction (from)	NW	
/ind speed	5 mph	
mbient temperature	88°	
ischarge temperature		
ky conditions	Clear	

Diagram Of Observation/Discharge Point

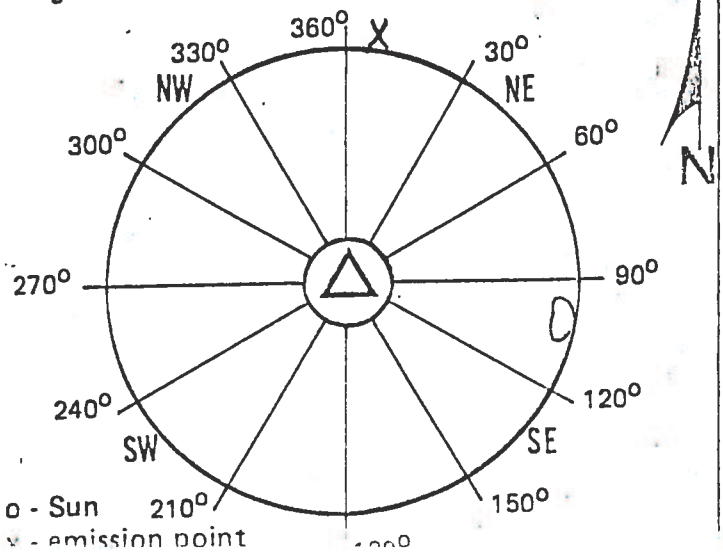

Min.	Seconds 0	15	30	45
0	35	35	30	30
1	30	30	30	30
2	30	30	35	35
3	35	35	35	35
4	30	30	30	30
5	30	35	25	30
0	25	25	30	30
1	35	35	35	30
2	35	35	35	35
3	35	35	35	35
4	35	35	35	35
5	30	30	25	20
0	20	20	25	25
1	25	25	25	25
2	25	25	30	30
3	30	40	60	60
4	60	50	50	40
5	40	40	55	50

Remarks:

Visible Emissions Evaluation Record

ant Name: Hercules Inc

ddress: West 7th Street

ty: Hattiesburg

nission Point: 010

te: 6-11-85

emission point operation normal ? _____

V. E. Observer: Bobbie Draughn

Certification Expiration: 10-18-85

Set No.	Time		Opacity	
	Start	End	Sum	Average
	10^{30}	10^{36}	660	27.5
	10^{36}	10^{42}	1030	42.9
	10^{42}	10^{48}	640	26.7

Overall Average: 32.4

	Initial	Final
stance to discharge	2 Lengths	
rection to discharge	N	
ight of observation point	Ground	
ight of discharge	225 feet	
me color	Gray	
me background	Gray Sky	
ter vapor in plume ?		
id direction (from)	SE	
id speed	5 mph	
bient temperature	77°	
charge temperature		
conditions	Cloudy + Raining	

Min.	Seconds 0	15	30	45
0	15	15	15	15
1	15	20	30	30
2	30	35	35	35
3	40	40	30	30
4	25	25	30	30
5	30	30	30	30
0	35	30	35	35
1	35	35	25	20
2	25	25	35	35
3	35	50	60	60
4	50	50	65	60
5	80	60	50	40
0	35	35	35	40
1	35	35	30	30
2	35	30	25	25
3	35	35	35	35
4	25	25	10	10
5	10	10	10	10

agram Of Observation/Discharge Point

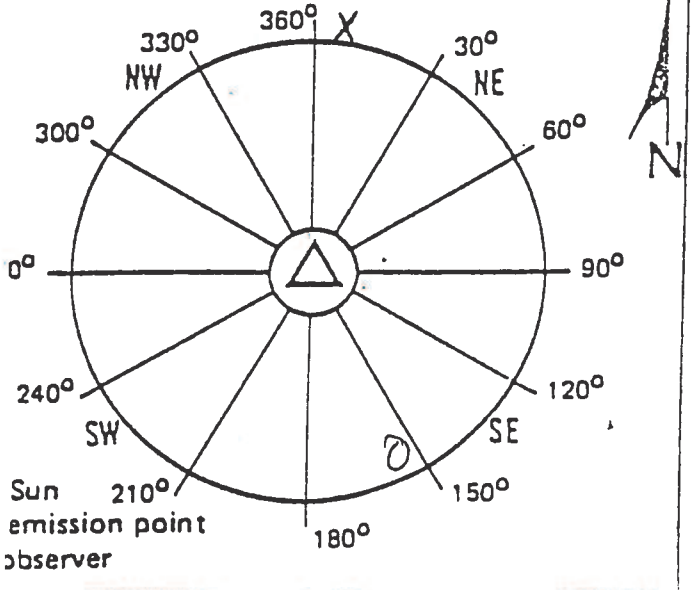

SET NO.	REMARKS
1	
2	
3	

Received By: _____

DATE _____

BOILER ROOM ENVIRONMENTAL LOG SHEET

Cleaned Fires		7 - 3 Shift	3 - 11 Shift	11 - 7 Shift
No. 1 Boiler	Started			
	Stopped			
No. 2 Boiler	Started			
	Stopped			
No. 3 Boiler	Started			11:20
	Stopped			12:30
No. 4 Boiler	Started			
	Stopped			

Comments on Boiler Operation

OPACITY EVALUATION - WOOD BURNING BOILERS

BOILER NO. 1			BOILER NO. 2			BOILER NO. 3			BOILER NO. 4		
Time	Duration	Note	Time	Duration	Note	Time	Duration	Note	Time	Duration	Note

1. Cleaning Boile
2. Fuel Oil Adjustment
3. Load Changes
4. Meter. Defect
5. Cleaning Meter Lenses
6. Wood
7. [illegible]

COMMENTS ON OPACITY & METER OPERATION

Bureau of Pollution Control
Visible Emissions Evaluation Record

Plant Name: Hercules Inc
Address: West 7th Street
City: Hattiesburg
Emission Point: 009
Date: 6-13-85
Is emission point operation normal ? _____

V. E. Observer: Bobbie Draughn
Certification Expiration: 10-18-85

Set No.	Time Start	Time End	Opacity Sum	Opacity Average
	11 54	12 02	830	34.6
	12 02	12 08	900	37.5
	12 08	12 14	1530	63.8

Overall Average: 45.3

	Initial	Final
Distance to discharge	2 Lengths	
Direction to discharge	N	
Height of observation point	Ground	
Height of discharge	200 feet	
Plume color	Gray	
Plume background	Gray Sky	
Water vapor in plume ?		
Wind direction (from)	SE	
Wind speed	10-15 mph	
Ambient temperature	80°	
Discharge temperature		
Sky conditions	Pc	

Min.	Seconds 0	15	30	45
0	70	60	60	50
1	50	40	40	35
2	35	50	35	35
3	25	20	25	20
4	20	20	20	20
5	25	25	25	25
0	15	15	15	20
1	20	25	30	35
2	35	35	50	50
3	50	65	50	40
4	40	50	55	45
5	40	40	40	40
0	45	45	40	40
1	35	35	40	40
2	40	50	50	50
3	100	80	60	70
4	80	90	100	80
5	100	90	100	70

Diagram Of Observation/Discharge Point

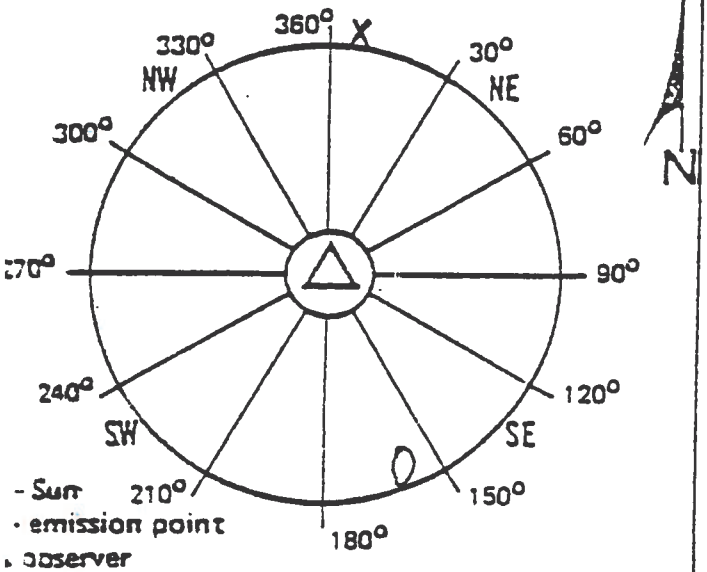

SET NO.	REMARKS
1	
2	
3	

Received By: _____

DATE 6/[illegible]

BOILER ROOM ENVIRONMENTAL LOG SHEET

Cleaned Fires		7 - 3 Shift	3 - 11 Shift	11 - 7 Shift
No. 1 Boiler	Started			
	Stopped			
No. 2 Boiler	Started			
	Stopped		3:[illegible]	
No. 3 Boiler	Started			
	Stopped			
No. 4 Boiler	Started			
	Stopped			5:55

Comments on Boiler Operation

OPACITY EVALUATION - WOOD BURNING BOILERS

BOILER NO. 1			BOILER NO. 2			BOILER NO. 3			BOILER NO. 4		
Time	Duration	Note	Time	Duration	Note	Time	Duration	Note	Time	Duration	Note
			[illegible]	1-[illegible]	7	[illegible]	[illegible]	1	[illegible]	[illegible]	3
			[illegible]	[illegible]	7	[illegible]	[illegible]	7	[illegible]	1-[illegible]	1
			[illegible]	[illegible]	7	3:[illegible]	1-[illegible]	1	[illegible]	[illegible]	
			[illegible]	10-5	7	[illegible]	10-5	1	[illegible]	1-[illegible]	
						[illegible]	5-5	1	[illegible]	1-[illegible]	7
						[illegible]	5-5	1	[illegible]	20-5	7

1. Cleaning Boil
2. Fuel Oil Adjustment
3. Load Changes
4. Meter Defect
5. Cleaning Mete Lenses
6. Wood
7. [illegible]

COMMENTS ON OPACITY & METER OPERATION

Visible Emissions Evaluation Record

lant Name: Hercules Inc

ddress: West 7th Street

ity: Hattiesburg

mission Point: 010

ate: 6-24-85

emission point operation normal ? _____

V. E. Observer: Bobbie Draughn

Certification Expiration: 10-18-85

Set No.	Time		Opacity	
	Start	End	Sum	Average
1	1124	1132	185	7.7
2	1132	1138	360	15.0
3	1138	1144	510	21.3

Overall Average: 14.7

	Initial	Final
istance to discharge	2 Lengths	
irection to discharge	N	
eight of observation point	Ground	
eight of discharge	225 feet	
ume color	Gray	
ume background	Gray Sky	
ter vapor in plume ?		
nd direction (from)	SE	
nd speed	5-10 mph	
nbient temperature	93°	
charge temperature		
conditions	PC	

Min.	Seconds 0	15	30	45
0	5	5	10	5
1	10	10	10	10
2	5	5	5	5
3	5	5	5	5
4	5	10	10	10
5	10	10	10	15
0	15	15	15	15
1	15	15	15	15
2	15	15	15	15
3	15	15	15	15
4	15	15	15	15
5	15	15	15	15
0	15	15	15	15
1	15	15	15	15
2	20	20	20	20
3	20	20	20	20
4	15	15	15	15
5	25	25	40	80

iagram Of Observation/Discharge Point

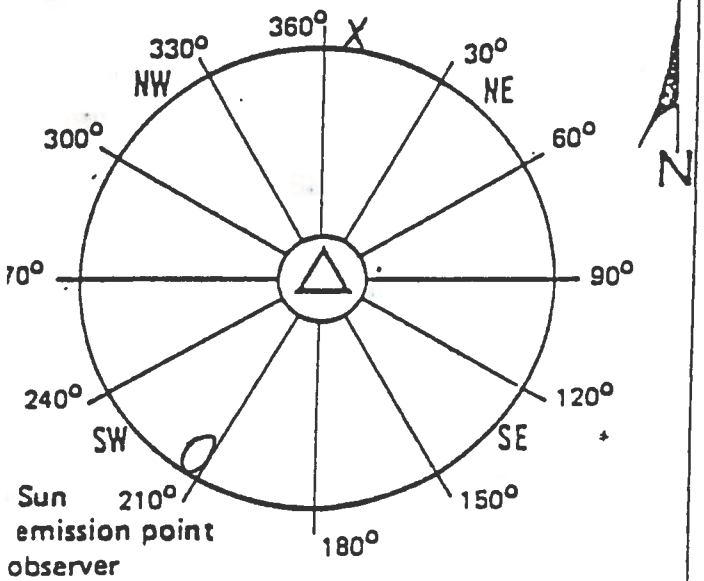

SET NO.	REMARKS
1	
2	
3	

Received By: _____

Visible Emissions Evaluation Record

Plant Name: Hercules Inc

Address: West 7th Street

City: Hattiesburg

Emission Point: 010

Date: 6-28-85

Is emission point operation normal ? _____

V. E. Observer: Bobbie Draughn

Certification Expiration: 10-18-85

Set No.	Time		Opacity	
	Start	End	Sum	Average
1	1147	1153	590	24.6
2	1153	1159	1075	44.8
3	1159	2005	1140	47.5

Overall Average: 39.0

	Initial	Final
Distance to discharge	2 Lengths	
Direction to discharge	N	
Height of observation point	Ground	
Height of discharge	225 feet	
Plume color	Gray	
Plume background	Gray Sky	
Water vapor in plume ?		
Wind direction (from)	NW	
Wind speed	10 mph	
Ambient temperature	88°	
Discharge temperature		
Sky conditions	PC	

Min.	Seconds 0	15	30	45
0	15	15	15	15
1	15	15	20	25
2	20	20	20	20
3	20	20	20	30
4	30	40	40	30
5	35	40	40	30
0	30	30	25	20
1	20	30	30	50
2	50	50	50	50
3	50	50	50	50
4	50	50	50	50
5	70	60	50	60
0	50	50	40	40
1	50	40	30	20
2	70	50	50	50
3	40	50	50	50
4	45	45	50	50
5	50	55	55	60

Diagram Of Observation/Discharge Point

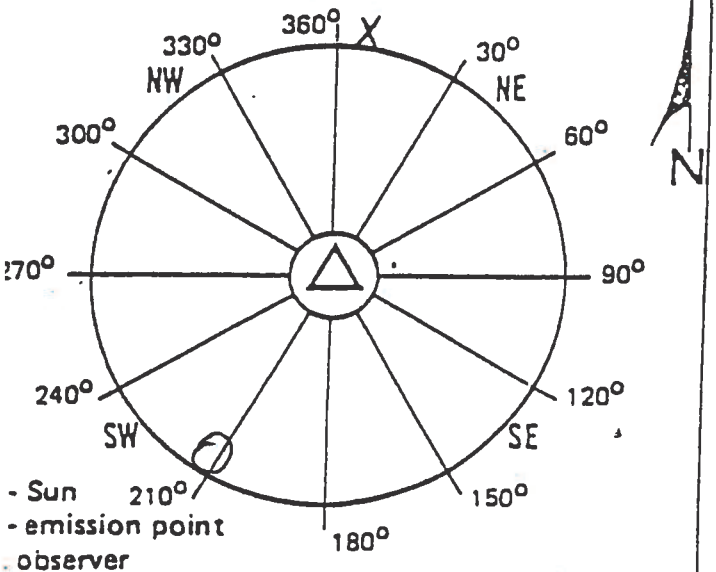

SET NO.	REMARKS
1	
2	
3	

Received By: _____

DATE _____

BOILER ROOM ENVIRONMENTAL LOG SHEET

Cleaned Fires		7 - 3 Shift	3 - 11 Shift	11 - 7 Shift
No. 1 Boiler	Started			
	Stopped			
No. 2 Boiler	Started			
	Stopped			
No. 3 Boiler	Started			
	Stopped			
No. 4 Boiler	Started			
	Stopped			

Comments on Boiler Operation

OPACITY EVALUATION - WOOD BURNING BOILERS

BOILER NO. 1			BOILER NO. 2			BOILER NO. 3			BOILER NO. 4			
Time	Duration	Note	Time	Duration	Note	Time	Duration	Note	Time	Duration	Note	1.Cleaning Boil
					2						1	2.Fuel Oil Adjustment
					1							3.Load Changes
					7							4.Meter Defect
												5.Cleaning Mete Lenses
												6. Wood

COMMENTS ON OPACITY & METER OPERATION _____

Hercules Incorporated
West 7th Street
P.O. Box 1937
Hattiesburg, MS 39401
(601) 545-3450

June 12, 1985

Mr. Dwight K. Wylie, P.E. Chief
Air Division
Bureau of Pollution Control
P. O. Box 10385
Jackson, Mississippi 39209

Dear Mr. Wylie:

In reference to operating permit No. 0800-0001, please find the attached monthly report detailing the compliance status of the boilers for emission points 009 and 010.

We will continue to submit this report on a monthly basis.

Very truly yours,

Charles Jordan

Charles Jordan
Environmental Supervisor

CSJ:sw

Attachments

6/11/85

To: C.S. Jordan

From: R.A. Van Beek

Operating Permit No. 00800-00001 Hattiesburg, MS
Issued For The Operation of Air Emissions Equipment

In reference to the above permit, Part III, Other Requirements, 1-C, the following monthly report is for May, 1985.

The report details the complaince status of the boilers with copies of all visible emissions evaluations in which <u>any</u> reading exceeds 40% opacity.

Total number of VEE copies attached = 9.

In addition, copies of log sheets are attached for all visible emission evaluations when opacity exceeds 40% for two minutes or more.

Number of log sheets attached = 7.

R.A. Van Beek

Mississippi Department of Natural Resources
Bureau of Pollution Control
Visible Emissions Evaluation Record

Plant Name: Hercules Inc.
Address: West 7th Street
City: Hattiesburg
Emission Point: 010
Date: 5-31-85
Is emission point operation normal ?

V. E. Observer: Bobbie Draughon
Certification Expiration: 10-18-85

Set No.	Time Start	Time End	Opacity Sum	Opacity Average
	8^10	8^16	1110	46.3
	8^16	8^22	1450	60.4
	8^22	8^28	1265	52.7

Overall Average: 53.1

	Initial	Final
Distance to discharge	2 Lengths	
Direction to discharge	N	
Height of observation point	Ground	
Height of discharge	225 feet	
Plume color	Gray	
Plume background	Blue Sky	
Water vapor in plume ?		
Wind direction (from)	W	
Wind speed	10 mph	
Ambient temperature	82°	
Discharge temperature		
Sky conditions	Pc	

Diagram Of Observation/Discharge Point

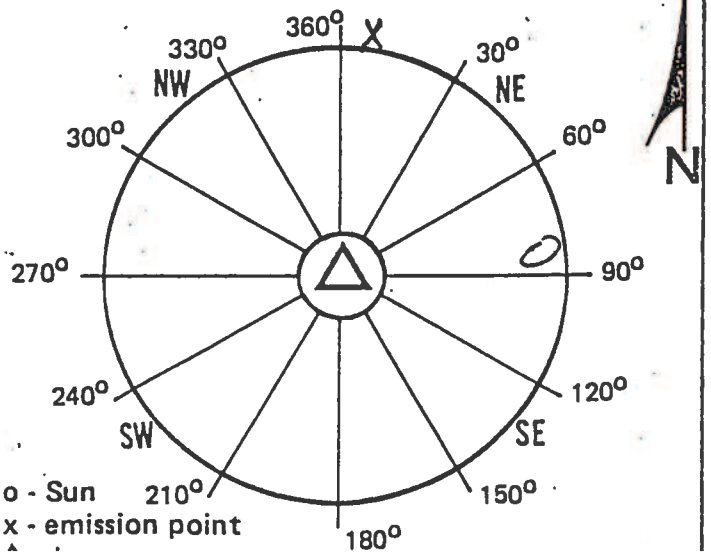

o - Sun
x - emission point

Min.	Seconds 0	15	30	45
0	40	40	65	80
1	80	70	70	50
2	40	35	40	35
3	35	35	40	40
4	35	35	35	35
5	35	40	50	50
0	60	80	60	50
1	50	50	80	100
2	100	70	50	40
3	60	50	70	60
4	70	60	60	60
5	50	50	40	30
0	30	50	70	70
1	70	100	80	80
2	60	60	70	60
3	60	50	50	40
4	30	35	30	30
5	35	35	35	35

Remarks:

DATE 6-3-15

BOILER ROOM ENVIRONMENTAL LOG SHEET

Cleaned Fires		7 - 3 Shift	3 - 11 Shift	11 - 7 Shift
No. 1 Boiler	Started	[illegible]	5:15	12:00
	Stopped	9:30	6:20	12:00
No. 2 Boiler	Started		—	X
	Stopped		—	X
No. 3 Boiler	Started	7:[illegible]	3:00	10:50
	Stopped	[illegible]:00	4:05	11:20
No. 4 Boiler	Started			
	Stopped			X

Comments on Boiler Operation NORTH STACK SMOKE ABOUT 2-11-
Cleaning Boiler 7:18 AM-

OPACITY EVALUATION - WOOD BURNING BOILERS

BOILER NO. 1			BOILER NO. 2			BOILER NO. 3			BOILER NO. 4		
Time	Duration	Note	Time	Duration	Note	Time	Duration	Note	Time	Duration	Note
5:45	1-M	1				7:18	2-M	1			
6:25	2-M	6				3:12	30-S	1			
12:30	1 M	2				1,05?	3 M	1			

1. Cleaning Boile
2. Fuel Oil Adjustment
3. Load Changes
4. Meter Defect
5. Cleaning Meter Lenses
6. Wood

COMMENTS ON OPACITY & METER OPERATION

Visible Emissions Evaluation Record

Plant Name: Hercules Inc.

Address: West 7th St.

City: Hollandale Miss.

Emission Point: 010

Date: 5-23-85

Is emission point operation normal ? _____

V. E. Observer: Bobbie Daughtry

Certification Expiration: 10-18-85

Set No.	Time		Opacity	
	Start	End	Sum	Average
1	8:15	8:21	385	16.0
2	8:21	8:27	870	36.3
3	8:27	8:33	1260	52.5

Overall Average: 34.9

	Initial	Final
Distance to discharge	2 Lengths	
Direction to discharge	N	
Height of observation point	Ground	
Height of discharge	225 ft	
Plume color	Gray	
Plume background	Gray	Sky
Water vapor in plume ?		
Wind direction (from)	W	
Wind speed	5 mph	
Ambient temperature	71°	
Discharge temperature		
Sky conditions	Pc	

Diagram Of Observation/Discharge Point

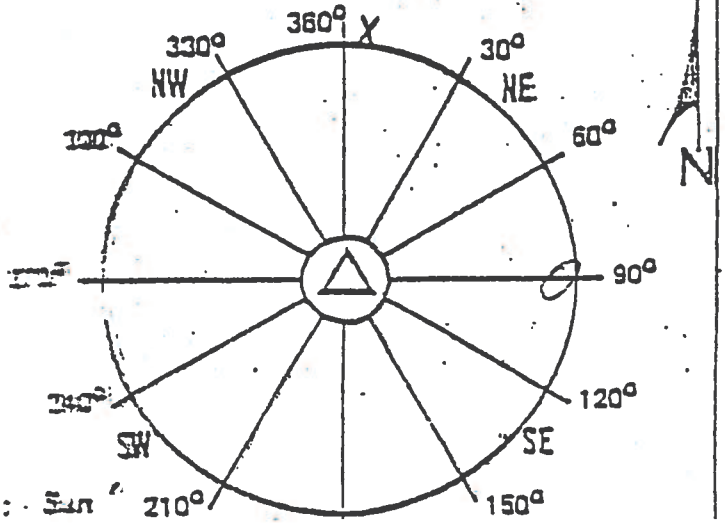

Min.	Seconds 0	15	30	45
0	10	10	5	5
1	10	10	5	5
2	5	10	10	15
3	10	10	15	25
4	25	25	25	25
5	35	35	30	25
0	30	30	30	30
1	30	30	30	30
2	30	30	30	30
3	40	40	40	45
4	45	45	45	40
5	40	40	45	45
0	40	45	50	60
1	60	60	65	60
2	70	70	60	65
3	65	60	65	70
4	65	65	35	30
5	30	20	25	25

Remarks: _____

DATE 5-23-85

BOILER ROOM ENVIRONMENTAL LOG SHEET

Cleaned Fires		7 - 3 Shift	3 - 11 Shift	11 - 7 Shift
No. 1 Boiler	Started			
	Stopped			
No. 2 Boiler	Started		5:10	
	Stopped		5:45	
No. 3 Boiler	Started			
	Stopped			
No. 4 Boiler	Started		3:30	
	Stopped		4:30	

Comments on Boiler Operation #3 on line AT 4:00 PM

1. PUT wood in #1 boiler AT shift change it smoke about 3 min. until fire started burning.
2. CUT wood out of #1 boiler AT 3:50 PM on both side, kept it heated up during shift.

OPACITY EVALUATION - WOOD BURNING BOILERS

BOILER NO. 1			BOILER NO. 2			BOILER NO. 3			BOILER NO. 4		
Time	Duration	Note	Time	Duration	Note	Time	Duration	Note	Time	Duration	Note
12:20	2 m	6	930	1 M	3				925	3 M	1
2:30	3-11	3									
10:52	2 M	(3)									

1. Cleaning Boile
2. Fuel Oil Adjustment
3. Load Changes
4. Meter Defect
5. Cleaning Meter Lenses
6. Wood

COMMENTS ON OPACITY & METER OPERATION

Plant Name: Hercules Inc.

Address: West 7th St.

City: Hattiesburg Miss.

Emission Point: 009

Date: 5-22-85

Is emission point operation normal ? _____

	Initial	Final
Distance to discharge	2 Lengths	
Direction to discharge	N	
Height of observation point	Ground	
Height of discharge	200 ft.	
Plume color	Gray	
Plume background	Blue Sky	
Water vapor in plume ?		
Wind direction (from)	SW	
Wind speed	5 mph	
Ambient temperature	81°	
Discharge temperature		
Sky conditions	PC	

Diagram Of Observation/Discharge Point

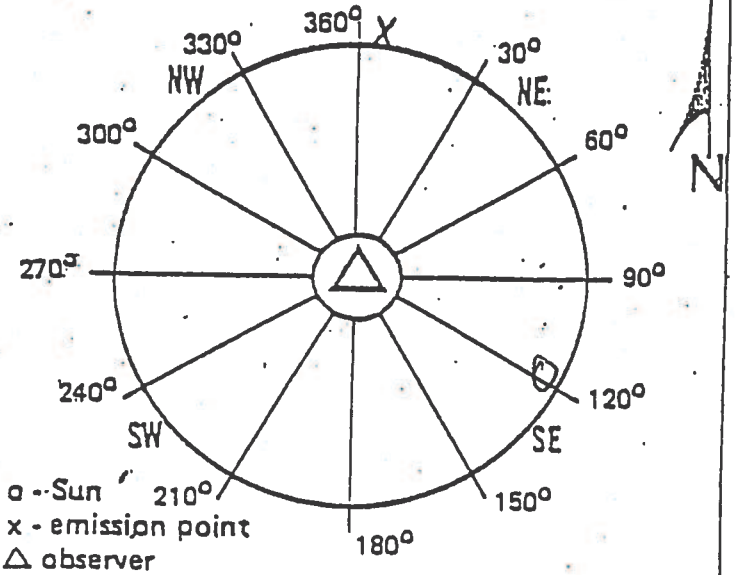

V. E. Observer: Bobbie Draughn

Certification Expiration: 10-18-85

Set No.	Time Start	Time End	Opacity Sum	Opacity Aver
1	10^{35}	10^{41}	1650	68
2	10^{41}	10^{47}	1500	62
3	10^{47}	10^{53}	185	7.

Overall Average: 46.3

Min.	Seconds 0	15	30	
0	70	70	65	60
1	60	60	50	50
2	55	60	45	45
3	40	40	45	45
4	100	100	100	100
5	100	100	100	90
0	85	70	60	70
1	60	70	60	70
2	70	70	70	90
3	100	100	100	100
4	60	50	40	30
5	20	20	20	15
0	5	5	15	10
1	10	10	10	10
2	5	5	5	10
3	10	10	10	10
4	10	5	5	5
5	5	5	5	5

Remarks: _____

Received By: _____

DATE 5/22/85

BOILER ROOM ENVIRONMENTAL LOG SHEET

Cleaned Fires		7 - 3 Shift	3 - 11 Shift	11 - 7 Shift
No. 1 Boiler	Started	10:50	5:00	
	Stopped	12:10	5:30	
No. 2 Boiler	Started		6:30	
	Stopped		8:00	
No. 3 Boiler	Started	6:45	X	
	Stopped	7:20		
No. 4 Boiler	Started	8:00	3:15	
	Stopped	9:45	4:35	

Comments on Boiler Operation #2 boiler smoked, amount due to resin and wood chips, 3 shift. Boiler had been off line for repairs for 2 months. Smoke occured when trying to balace gas & drafts to raise pressure. Also large amount of Rosin in Hopper from 7:40 pm to 3:45 pm

OPACITY EVALUATION - WOOD BURNING BOILERS

BOILER NO. 1			BOILER NO. 2			BOILER NO. 3			BOILER NO. 4		
Time	Duration	Note	Time	Duration	Note	Time	Duration	Note	Time	Duration	Note
			10:00 Am	?	7						
			2:40	30 M	6						
			10:45	10 Sec.	(6)						

1. Cleaning Boile
2. Fuel Oil Adjustment
3. Load Changes
4. Meter Defect
5. Cleaning Meter Lenses
6. Wood
7. Rosin

COMMENTS ON OPACITY & METER OPERATION

Visible Emissions Evaluation Record

ant Name: Hercules Inc.

ddress: West 7th St.

ty: H'burg Miss.

nission Point: 010

te: 5-14-85

mission point operation normal ?

	Initial	Final
tance to discharge	2 Lengths	
ection to discharge	N	
ght of observation point	Ground	
ght of discharge	225 ft	
ne color	GRAY	
ne background	GRAY	
er vapor in plume ?		
d direction (from)	West	
d speed	5 MPH	
ient temperature		
harge temperature		
conditions	Cloudy	

gram Of Observation/Discharge Point

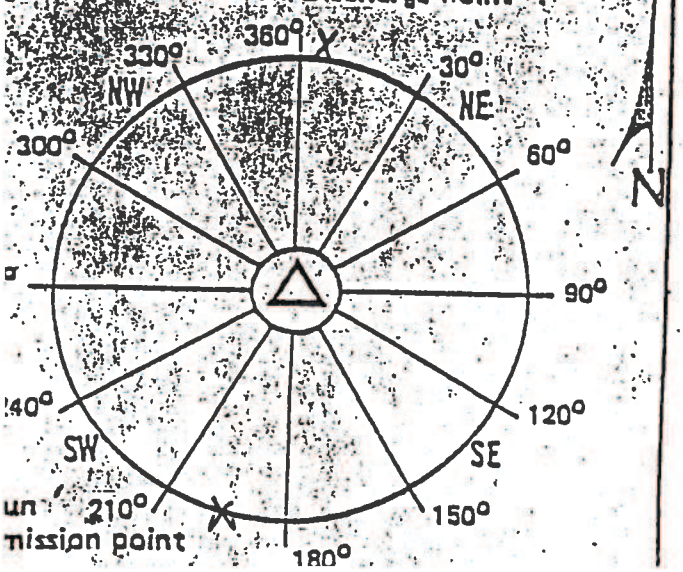

V. E. Observer: Howard Gunnell

Certification Expiration:

Set No.	Time Start	Time End	Opacity Sum	Opacity Average
1	1:28 Pm	1:34 Pm	1000	41.7
2	1:34 Pm	1:40 Pm	560	23.3
3	1:40 Pm	1:46 Pm	995	41.5

Overall Average: 35.5

Min.	Seconds 0	15	30	45
0	70	70	70	60
1	60	60	60	50
2	50	50	30	30
3	50	40	25	25
4	10	10	10	25
5	25	40	50	30
0	20	30	50	40
1	20	5	5	5
2	5	5	5	5
3	5	5	5	5
4	10	10	25	30
5	50	65	75	80
0	90	90	100	100
1	75	50	25	40
2	60	75	75	65
3	45	25	15	20
4	10	5	5	5
5	5	5	5	5

Remarks:

DATE 5-14-85

BOILER ROOM ENVIRONMENTAL LOG SHEET

Cleaned Fires		7 - 3 Shift	3 - 11 Shift	11 - 7 Shift
No. 1 Boiler	Started	—		
	Stopped	—		
No. 2 Boiler	Started	—		
	Stopped	—		
No. 3 Boiler	Started	7:25	3 0 0	11:45
	Stopped	9:45	5 0 0	1:30
No. 4 Boiler	Started	11:15	5 5 0	3:00
	Stopped	1:55	8 0 0	4:45

Comments on Boiler Operation

OPACITY EVALUATION - WOOD BURNING BOILERS

BOILER NO. 1			BOILER NO. 2			BOILER NO. 3			BOILER NO. 4		
Time	Duration	Note	Time	Duration	Note	Time	Duration	Note	Time	Duration	Note
									550	20 S	2
									1:50	3+5	2
									1:53	3 - 5	2
									1:58	4 - 5	2

1. Cleaning Boile
2. Regulator Adjustment
3. Load Changes
4. Meter Defect
5. Cleaning Meter Lenses
6. Wood

COMMENTS ON OPACITY & METER OPERATION

Visible Emissions Evaluation Record

Plant Name: Hercules Inc.

Address: West 7th St.

City: Hollandale Miss.

Emission Point: 010

Date: 5-9-85

Is emission point operation normal ?

V. E. Observer: Bobbie Daughtry

Certification Expiration: 10-18-85

Set No.	Time		Opacity	
	Start	End	Sum	Average
1	1:25	1:31	245	10.2
2	1:31	1:37	445	18.5
3	1:37	1:43	905	37.7

Overall Average: 22.1

	Initial	Final
Distance to discharge	2 Lengths	
Direction to discharge	N	
Height of observation point	Ground	
Height of discharge	225 ft	
Plume color	Gray	
Plume background	Gray	Sky
Water vapor in plume ?		
Wind direction (from)	Nil	
Wind speed	10 mph	
Ambient temperature	76°	
Discharge temperature		
Sky conditions	Pc	

Diagram Of Observation/Discharge Point

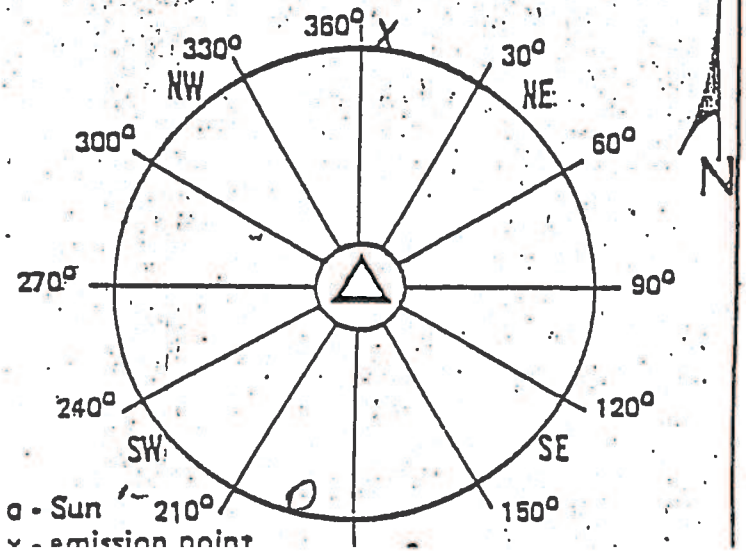

Min.	Seconds 0	15	30	45
0	10	10	10	10
1	10	5	10	10
2	10	10	5	10
3	10	5	5	10
4	10	15	15	10
5	10	15	15	15
0	10	10	10	15
1	15	15	15	15
2	15	15	20	20
3	20	25	25	25
4	25	25	25	25
5	25	20	15	15
0	10	10	25	35
1	25	25	30	30
2	20	20	50	60
3	40	40	40	50
4	50	50	50	50
5	50	50	50	45

Remarks:

DATE 5/9/85

BOILER ROOM ENVIRONMENTAL LOG SHEET

Cleaned Fires		7 - 3 Shift	3 - 11 Shift	11 - 7 Shift
No. 1 Boiler	Started	11:00	6:50	
	Stopped	1:05	8:00	
No. 2 Boiler	Started	—	—	
	Stopped	—	—	
No. 3 Boiler	Started	—	—	11:30
	Stopped	—	—	1:00
No. 4 Boiler	Started	7:05	3:30	3:00
	Stopped	7:05	5:40	4:30

Comments on Boiler Operation

Starting No 2 @ 1 PM.

OPACITY EVALUATION - WOOD BURNING BOILERS

BOILER NO. 1			BOILER NO. 2			BOILER NO. 3			BOILER NO. 4		
Time	Duration	Note	Time	Duration	Note	Time	Duration	Note	Time	Duration	Note
3:30 PM	1-M	6				1:35 PM	2M		7:20	30-S	3

1. Cleaning Boile
2. Fuel Oil Adjustment
3. Load Changes
4. Meter Defect
5. Cleaning Meter Lenses
6. Wood

COMMENTS ON OPACITY & METER OPERATION

Plant Name: Hercules Inc.

Address: West 7th St.

City: Hattiesburg Miss.

Emission Point: 009

Date: 5-7-85

Is emission point operation normal ? _____

V. E. Observer: Bobbie Draughn

Certification Expiration: October 85

Set No.	Time Start	Time End	Opacity Sum	Opacity Avera
1	10^{44}	10^{50}	855	35.6
2	10^{50}	10^{56}	830	34.6
3	10^{56}	11^{02}	890	37.1

Overall Average: 35.8

	Initial	Final
Distance to discharge	2 Lengths	
Direction to discharge	N	
Height of observation point	Ground	
Height of discharge	200 ft.	
Plume color	Gray	
Plume background	Gray Sky	
Water vapor in plume?		
Wind direction (from)	S	
Wind speed	5-10	
Ambient temperature	86°	
Discharge temperature		
Sky conditions	PC	

Min.	Seconds 0	15	30	45
0	20	20	25	25
1	25	25	10	5
2	5	30	35	50
3	40	40	30	50
4	40	40	40	70
5	70	60	50	50
0	40	25	20	30
1	20	20	20	20
2	25	25	30	30
3	30	30	65	70
4	60	55	65	40
5	40	30	20	20
0	20	30	30	20
1	25	20	40	40
2	35	35	40	50
3	40	40	35	30
4	30	30	60	50
5	50	50	40	50

Diagram Of Observation/Discharge Point

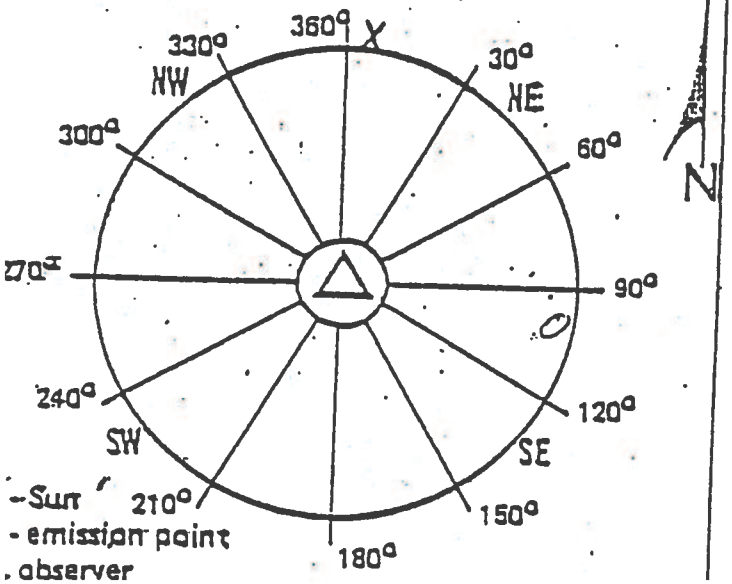

Remarks: _____

Visible Emissions Evaluation Record

Plant Name: Hercules Inc.

Address: West 7th St.

City: Hattiesburg Miss.

Emission Point: 009

Date: 5-3-85

Is emission point operation normal ? _____

V. E. Observer: Bobbie Draughn

Certification Expiration: October 85

	Initial	Final
Distance to discharge	2 Lengths	
Direction to discharge	N	
Height of observation point	Ground	
Height of discharge	200 ft.	
Plume color	Gray	
Plume background	Gray Sky	
Water vapor in plume ?		
Wind direction (from)	N	
Wind speed	15 mph	
Ambient temperature	68	
Discharge temperature		
Sky conditions	Cloudy	

Set No.	Time		Opacity	
	Start	End	Sum	Avera
1	10^{22}	10^{28}	1420	59.2
2	10^{28}	10^{34}	290	12.1
3	10^{34}	10^{40}	205	8.5

Overall Average: 26.6

Min.	Seconds 0	15	30	4
0	40	40	50	60
1	60	55	45	45
2	40	45	55	100
3	100	85	50	30
4	50	60	100	80
5	60	70	50	50
0	50	40	30	25
1	20	20	20	5
2	5	5	5	5
3	5	5	5	5
4	5	5	5	5
5	5	5	5	5
0	5	15	10	10
1	5	5	5	5
2	5	5	10	10
3	10	5	10	10
4	10	10	10	10
5	10	10	10	10

Diagram Of Observation/Discharge Point

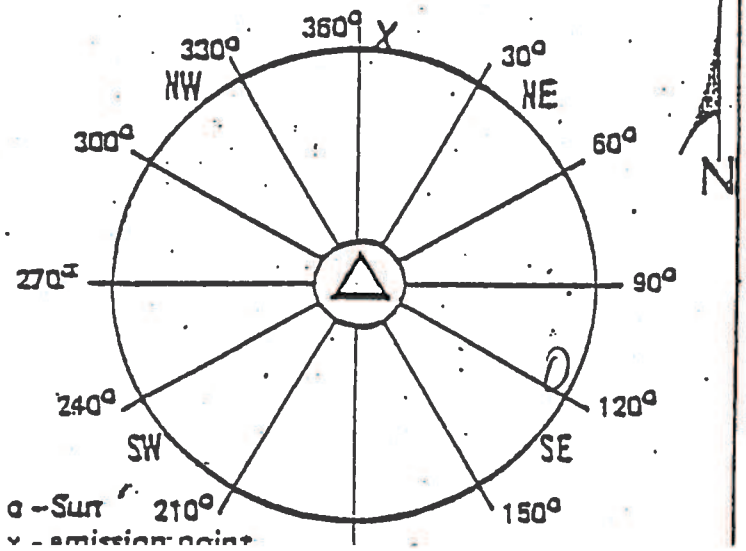

Remarks: _____

Visible Emissions Evaluation Reco

Plant Name: Hercules Inc.

Address: West 7th St.

City: Hattiesburg Miss.

Emission Point: 010

Date: 5-3-85

Is emission point operation normal ?

V. E. Observer: Bobbie Draught

Certification Expiration: October 85

Set No.	Time Start	Time End	Opacity Sum	Opacity Avera
1	10^{22}	10^{28}	1045	43.
2	10^{28}	10^{34}	850	35.
3	10^{34}	10^{40}	215	9.0

Overall Average: 29.3

	Initial	Final
Distance to discharge	2 Lengths	
Direction to discharge	N	
Height of observation point	Ground	
Height of discharge	225 ft	
Plume color	Gray	
Plume background	Gray Sky	
Water vapor in plume ?		
Wind direction (from)	N	
Wind speed	15 mph	
Ambient temperature	68°	
Discharge temperature		
Sky conditions	Cloudy	

Min.	Seconds 0	15	30	45
0	40	40	40	5
1	45	45	35	40
2	40	40	40	40
3	40	40	40	40
4	40	50	70	50
5	40	40	50	50
0	45	35	40	35
1	40	40	40	30
2	30	35	30	30
3	30	35	40	40
4	40	35	50	45
5	40	40	15	10
0	10	10	10	10
1	5	5	5	5
2	5	5	10	10
3	10	10	10	15
4	10	10	10	10
5	10	10	10	10

Diagram Of Observation/Discharge Point

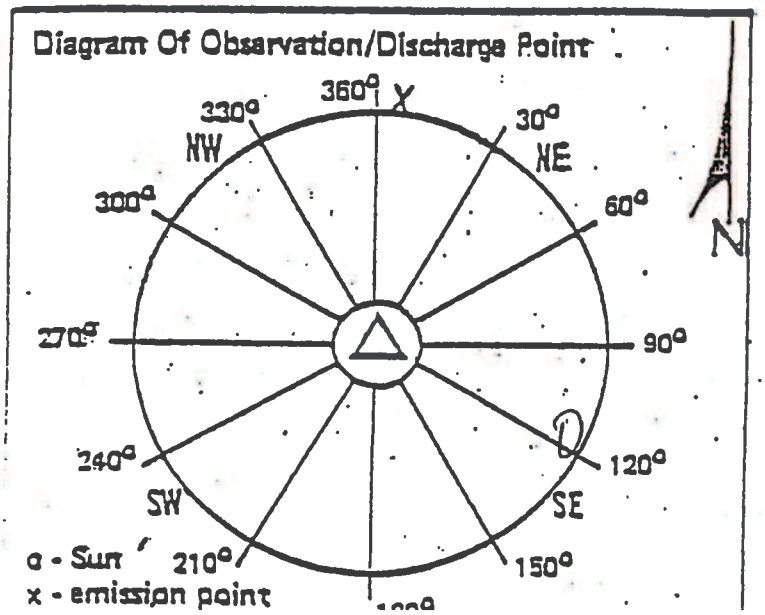

Remarks:

DATE 5-3-85

BOILER ROOM ENVIRONMENTAL LOG SHEET

Cleaned Fires		7 - 3 Shift	3 - 11 Shift	11 - 7 Shift
No. 1 Boiler	Started	5:35	5:55	2 0 [illegible]
	Stopped	10:10	8:00	3 2 [illegible]
No. 2 Boiler	Started	X		X
	Stopped	X		X
No. 3 Boiler	Started	10:40	8.55	4 [illegible]
	Stopped	11:45	10.20	5 0 5
No. 4 Boiler	Started	7:00	3:10	11 20
	Stopped	8:10	4:50	1 [illegible]

Comments on Boiler Operation

OPACITY EVALUATION - WOOD BURNING BOILERS

BOILER NO. 1			BOILER NO. 2			BOILER NO. 3			BOILER NO. 4		
Time	Duration	Note	Time	Duration	Note	Time	Duration	Note	Time	Duration	Note
7:30	5 Sec.	?									
7:42	8 Sec.	?									
9:52	2 Sec.	?									
10:04	10 Sec.	?									
2:30	30-5	1									
4:40	20-5	2									

1. Cleaning Boile
2. Fuel Oil Adjustment
3. Load Changes
4. Meter Defect
5. Cleaning Meter Lenses
6. Wood

COMMENTS ON OPACITY & METER OPERATION

Visible Emissions Evaluation Record

Plant Name: Hercules Inc.

Address: West 7th St.

City: Hollandale Miss.

Emission Point: 009

Date: 5-2-85

Is emission point operation normal ? _____

V. E. Observer: Bobbie Draughn

Certification Expiration: October 85

Set No.	Time		Opacity	
	Start	End	Sum	Aver
1	940	946	175	7.
2	946	952	625	26.
3	952	958	585	24.

Overall Average: 19.2

	Initial	Final
Distance to discharge	2 Lengths	
Direction to discharge	N	
Height of observation point	Ground	
Height of discharge	200 ft.	
Plume color	Gray	
Plume background	Gray Sky	
Water vapor in plume ?		
Wind direction (from)	W	
Wind speed	10 mph	
Ambient temperature	77°	
Discharge temperature		
Sky conditions	PC	

Diagram Of Observation/Discharge Point

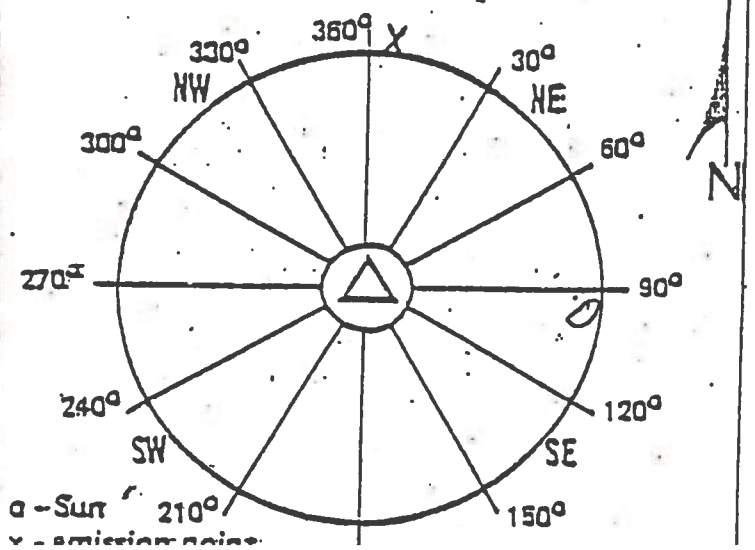

Min.	Seconds 0	15	30	
0	5	5	5	5
1	5	5	5	5
2	5	5	5	5
3	5	5	5	10
4	10	5	5	5
5	10	10	15	30
0	40	40	50	50
1	45	25	15	15
2	15	10	10	10
3	10	10	15	15
4	25	25	30	40
5	35	35	30	30
0	35	35	35	35
1	30	30	35	30
2	35	35	35	35
3	25	25	15	15
4	5	5	5	5
5	5	5	30	40

Remarks: _____

DATE 5-2-85

BOILER ROOM ENVIRONMENTAL LOG SHEET

Cleaned Fires		7 - 3 Shift	3 - 11 Shift	11 - 7 Shift
No. 1 Boiler	Started	9:20	5:45	215
	Stopped	10:45	7:30	410
No. 2 Boiler	Started	X		X
	Stopped	X		X
No. 3 Boiler	Started	11:45	8:50	500
	Stopped	1:15		620
No. 4 Boiler	Started	7:05	3:10	1125
	Stopped	8:35	5:10	110

Comments on Boiler Operation

OPACITY EVALUATION - WOOD BURNING BOILERS

BOILER NO. 1			BOILER NO. 2			BOILER NO. 3			BOILER NO. 4		
Time	Duration	Note	Time	Duration	Note	Time	Duration	Note	Time	Duration	Note
8:42	10 sec.	(6)							9:22 PM	10-S	3
12:07	15 Sec.	(6)	← wet sawdust						1:15	30-S	1
12:28	10 Sec.	(6)									
12:34	10 Sec.	(6)									
1:50 PM	20-S	6									
1:54 PM	10-S	2									
2:27 PM	10-S	3									
11:02 PM	10 S	2									
11:15 PM	10 S	2									
5:05 AM	20 S	3									

1. Cleaning Boile
2. Fuel Oil Adjustment
3. Load Changes
4. Meter Defect
5. Cleaning Meter Lenses
6. Wood

COMMENTS ON OPACITY & METER OPERATION

HERCULES

RECEIVED
MAY 31 1985
DEPT. OF NATURAL RESOURCE
BUREAU OF POLLUTION CONTROL

Hercules Incorporated
West 7th Street
P.O. Box 1937
Hattiesburg, MS 39401
(601) 545-3450

May 30, 1985

Mr. Dwight K. Wylie, P.E. Chief
Air Division
Bureau of Pollution Control
P.O. Box 10385
Jackson, Mississippi 39209

Dear Mr. Wylie:

In reference to operating permit No. 0800-0001, please find the attached monthly report detailing the compliance status of the boilers for emission points 009 and 010.

We have revised our Boiler Room Environmental Log Sheet and our Visible Emissions Evaluation Record Sheet to better define visible emission data. We will begin using the revised sheets in June. A copy of these revised sheets is attached.

We will continue to submit this report on a monthly basis.

Very truly yours,

Charles Jordan

Charles Jordan
Environmental Supervisor

CSJ:bs

Attachments

0028t

5/30/85

To: C.S. Jordan

From: R.A. Van Beek

Operating Permit No. 00800-00001 Hattiesburg, MS
Issued For The Operation of Air Emissions Equipment

In reference to the above permit, Part III, Other Requirements, 1-C, the following monthly report is for April, 1985.

The report details the complaince status of the boilers with copies of all visible emissions evaluations in which any reading exceeds 40% opacity.

Total number of VEE copies attached = 17.

In addition, copies of log sheets are attached for all visible emission evaluations when opacity exceeds 40% for two minutes or more.

Number of log sheets attached = 11.

R A Van Beek

Visible Emissions Evaluation Record

Plant Name: Hercules Inc.

Address: West 7th St.

City: Hilburg Miss.

Emission Point: 010

Date: 4-30-85

Is emission point operation normal ? _____

V. E. Observer: Bobbie Donaghue

Certification Expiration: October 85

Set No.	Time Start	Time End	Opacity Sum	Opacity Average
1	1150	1156	1055	44.0
2	1156	1202	805	33.5
3	1202	1208	1120	46.7

Overall Average: 41.4

	Initial	Final
Distance to discharge	2 Lengths	
Direction to discharge	N	
Height of observation point	Ground	
Height of discharge	225 ft	
Plume color	Gray	
Plume background	Blue Sky	
Water vapor in plume ?		
Wind direction (from)	SE	
Wind speed	10 mph	
Ambient temperature	86°	
Discharge temperature		
Sky conditions	PC	

Diagram Of Observation/Discharge Point

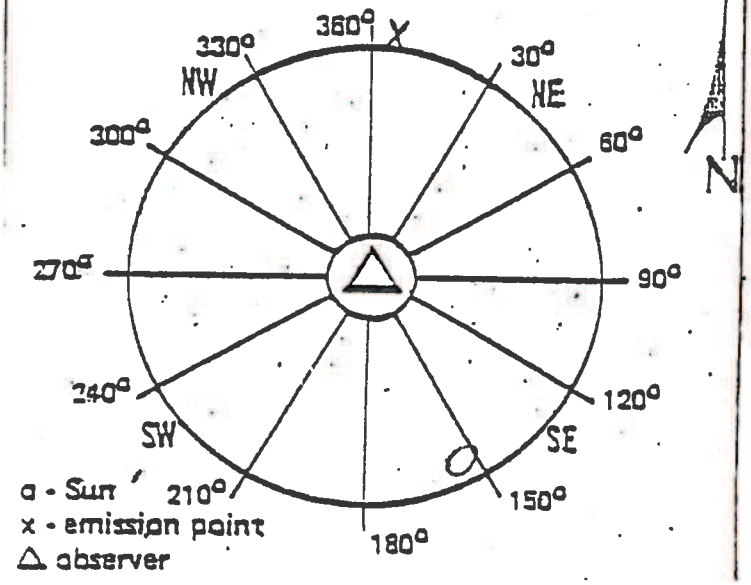

Min.	Seconds 0	15	30	45
0	25	25	35	40
1	50	40	30	30
2	30	70	30	40
3	40	30	30	40
4	60	60	70	60
5	60	60	50	50
0	50	45	40	40
1	40	35	30	20
2	30	30	30	30
3	30	30	30	30
4	25	25	30	60
5	35	30	20	40
0	25	25	30	40
1	80	50	50	60
2	60	50	40	40
3	45	40	40	40
4	35	35	35	55
5	60	50	60	75

Remarks: _____

DATE 4-30-85

BOILER ROOM ENVIRONMENTAL LOG SHEET

Cleaned Fires		7 - 3 Shift	3 - 11 Shift	11 - 7 Shift
No. 1 Boiler	Started	6:45	3:55	
	Stopped	7:40		
No. 2 Boiler	Started			
	Stopped			
No. 3 Boiler	Started	8:15		
	Stopped	8:35		
No. 4 Boiler	Started	11:10		
	Stopped	11:35		

Comments on Boiler Operation

OPACITY EVALUATION - WOOD BURNING BOILERS

BOILER NO. 1			BOILER NO. 2			BOILER NO. 3			BOILER NO. 4		
Time	Duration	Note	Time	Duration	Note	Time	Duration	Note	Time	Duration	Note
8:10	2	(2)				8:20	20-S	2	8:12	(10)	(2)
11:30	(5)	(3)									
4:15 pm	5-S	2									
2:55	5-S	2									
1:02	10-S	2									
9:06	20-S	2									

1. Cleaning Boile
2. Fuel Oil Adjustment
3. Load Changes
4. Meter Defect
5. Cleaning Meter Lenses
6. Wood

COMMENTS ON OPACITY & METER OPERATION

Visible Emissions Evaluation Recor

Plant Name: Hercules Inc.

Address: West 7th St.

City: Hi'land Miss.

Emission Point: 009

Date: 4-29-85

Is emission point operation normal ? _____

V. E. Observer: Bobbie Draughn

Certification Expiration: 4-25-85

Set No.	Time		Opacity	
	Start	End	Sum	Averag
1	7 50	7 56	900	37.5
2	7 56	8 02	835	34.8
3	8 02	8 08	855	35.6

Overall Average: 36.0

	Initial	Final
Distance to discharge	2 Lengths	
Direction to discharge	N	
Height of observation point	Ground	
Height of discharge	200 ft.	
Plume color	Gray	
Plume background	Blue Sky	
Water vapor in plume ?		
Wind direction (from)	NE	
Wind speed	5 mph	
Ambient temperature	72°	
Discharge temperature		
Sky conditions	Clear	

Min.	Seconds 0	15	30	45
0	30	30	40	40
1	40	40	40	40
2	40	40	40	40
3	35	35	40	40
4	40	40	40	40
5	30	30	35	35
0	35	35	30	30
1	30	30	35	35
2	30	25	30	30
3	35	35	40	40
4	35	35	40	40
5	40	40	40	40
0	40	40	40	40
1	40	40	35	30
2	30	35	35	35
3	45	45	40	30
4	30	35	35	35
5	30	30	30	30

Diagram Of Observation/Discharge Point

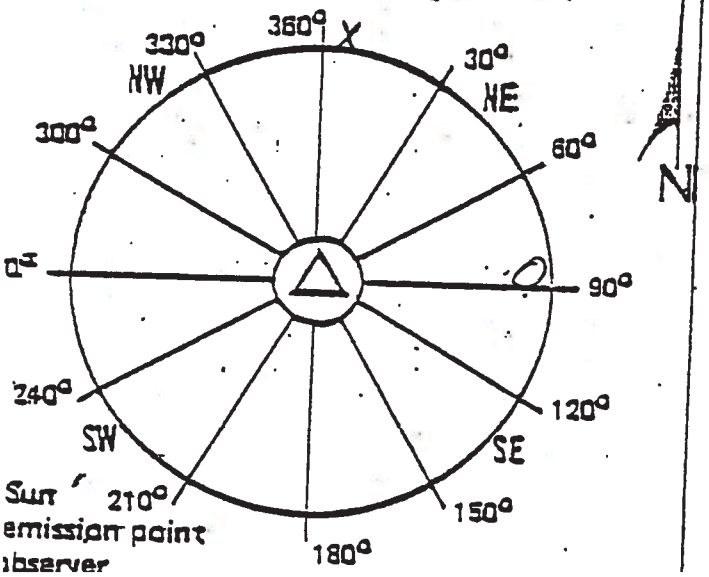

Remarks: _____

Visible Emissions Evaluation Record

Plant Name: Hercules Inc.

Address: West 7th St.

City: Hollandale Miss.

Emission Point: 009

Date: 4-25-85

Is emission point operation normal ? _____

V. E. Observer: Bobbie Draughn

Certification Expiration: 4-25-85

Set No.	Time		Opacity	
	Start	End	Sum	Averag
1	8^{30}	8^{36}	745	31.0
2	8^{36}	8^{42}	385	16.0
3	8^{42}	8^{48}	265	11.0

Overall Average: 19.3

	Initial	Final
Distance to discharge	2 Lengths	
Direction to discharge	N	
Height of observation point	Ground	
Height of discharge	200 ft.	
Plume color	Gray	
Plume background	Gray Sky	
Water vapor in plume?		
Wind direction (from)	SE	
Wind speed	10 mph	
Ambient temperature	74°	
Discharge temperature		
Sky conditions	Cloudy	

Diagram Of Observation/Discharge Point

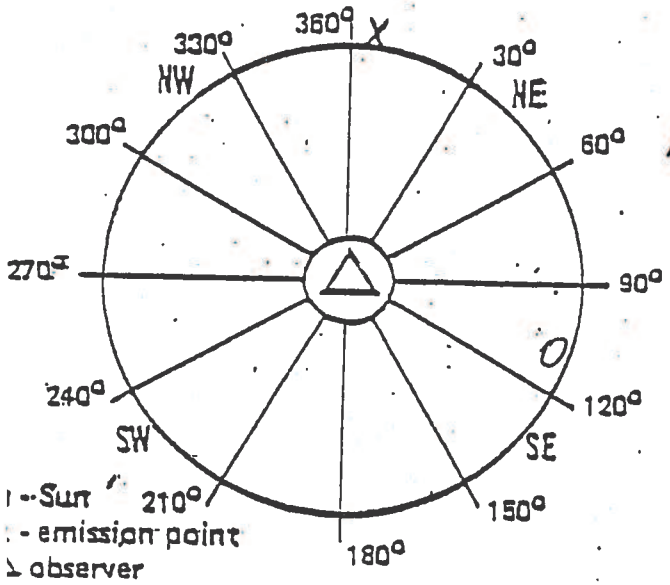

Min.	Seconds 0	15	30	45
0	15	15	25	35
1	35	35	50	50
2	50	50	50	50
3	55	60	50	60
4	20	10	5	5
5	5	5	5	5
0	5	10	10	25
1	30	30	20	20
2	30	30	25	15
3	15	15	15	10
4	10	10	10	10
5	10	10	10	10
0	10	10	5	5
1	5	5	5	5
2	5	5	10	10
3	15	15	15	15
4	10	10	15	15
5	20	20	20	15

Remarks: _____

DATE 4-25-85

BOILER ROOM ENVIRONMENTAL LOG SHEET

Cleaned Fires		7 - 3 Shift	3 - 11 Shift	11 - 7 Shift
No. 1 Boiler	Started	12 P.D	7:20	2:55
	Stopped	2:00	8:10	3:45
No. 2 Boiler	Started	X		
	Stopped	X		
No. 3 Boiler	Started	2:05	3:30	11:10
	Stopped	3:45	4:30	12:05
No. 4 Boiler	Started	7:30	5:30	1:10
	Stopped	11:10	6:30	2:00

Comments on Boiler Operation

OPACITY EVALUATION - WOOD BURNING BOILERS

BOILER NO. 1			BOILER NO. 2			BOILER NO. 3			BOILER NO. 4		
Time	Duration	Note	Time	Duration	Note	Time	Duration	Note	Time	Duration	Note
8:30	2:05	3							11:10	16-5	1
11:02	4-11	6							9:27	4-5	6
									11:05	30-5	6

1. Cleaning Boile
2. Fuel Oil Adjustment
3. Load Changes
4. Meter Defect
5. Cleaning Meter Lenses
6. Wood

COMMENTS ON OPACITY & METER OPERATION

Visible Emissions Evaluation Recd

Plant Name: Hercules Inc.

Address: West 7th St.

City: Hattiesburg Miss.

Emission Point: 010

Date: 4-23-85

Is emission point operation normal ? _____

V. E. Observer: Bobbie Douglas

Certification Expiration: 4-25-85

Set No.	Time		Opacity	
	Start	End	Sum	Average
1	12[15]	12[21]	840	35.0
2	12[28]	12[27]	935	39.0
3	12[27]	12[33]	735	30.6

Overall Average: 34.9

	Initial	Final
Distance to discharge	2 Lengths	
Direction to discharge	N "	
Height of observation point	Ground	
Height of discharge	225 ft	
Plume color	Gray	
Plume background	Gray	Sky
Water vapor in plume ?		
Wind direction (from)	S	
Wind speed	10 mph	
Ambient temperature	82°	
Discharge temperature		
Sky conditions	Cloudy	

Min.	Seconds 0	15	30	45
0	20	20	40	50
1	40	30	30	30
2	30	30	30	30
3	40	40	35	35
4	35	35	40	40
5	40	40	40	40
6	40	40	40	40
7	40	50	50	40
8	40	30	30	30
9	30	40	40	40
10	35	35	35	35
11	40	40	45	50
12	40	35	30	30
13	30	30	30	30
14	30	30	25	25
15	30	30	30	30
16	30	30	35	35
17	30	30	30	30

Diagram Of Observation/Discharge Point:

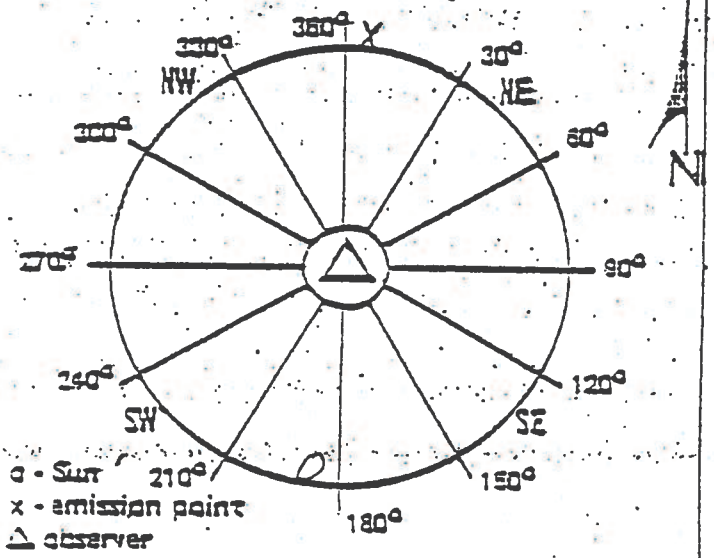

Remarks: _____

Received By: _____

Visible Emissions Evaluation Reco

Plant Name: Hercules Inc.

Address: West 7th St.

City: Hattiesburg Miss.

Emission Point: 010

Date: 4-22-85

Is emission point operation normal ? _____

V. E. Observer: Robbie Draughon

Certification Expiration: 4-25-85

Set No.	Time Start	Time End	Opacity Sum	Opacity Average
1	920	926	685	28.5
2	926	932	690	28.8
3	932	938	820	34.2

Overall Average: 30.5

	Initial	Final
Distance to discharge	2 Engths	
Direction to discharge	N	
Height of observation point	Ground	
Height of discharge	225 ft	
Plume color	Gray	
Plume background	Gray Sky	
Water vapor in plume ?		
Wind direction (from)	SE	
Wind speed	10 mph	
Ambient temperature	73°	
Discharge temperature		
Sky conditions	Cloudy	

Seconds

Min.	0	15	30	45
0	35	35	35	35
1	35	35	35	35
2	30	25	25	30
3	30	30	20	20
4	20	20	30	20
5	30	25	25	25
6	30	20	20	20
7	20	30	20	20
8	15	20	50	60
9	50	40	40	35
10	25	25	25	25
11	25	25	25	25
12	25	25	30	25
13	20	25	30	40
14	30	35	35	40
15	35	40	40	40
16	35	35	40	40
17	35	35	45	40

Diagram Of Observation/Discharge Point:

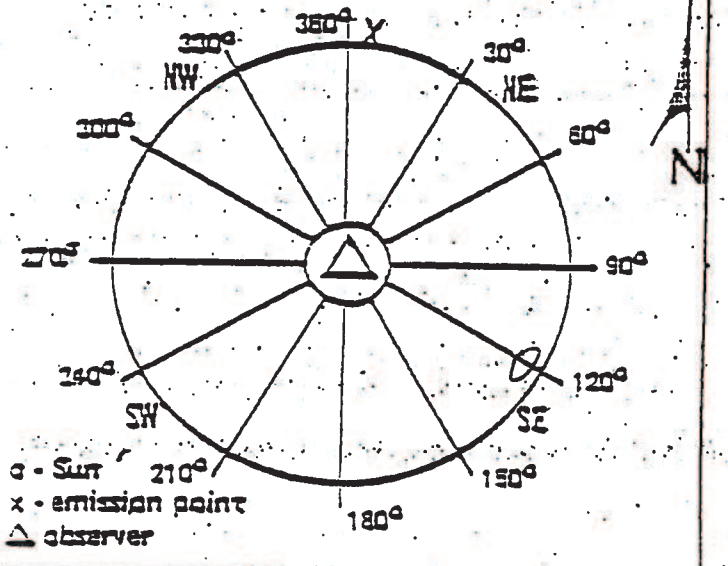

Remarks: _____

Received By: _____

Visible Emissions Evaluation Reco:

Plant Name: Hercules Inc.

Address: West 7th St.

City: H'burg Miss.

Emission Point: 010

Date: 4-19-85

Is emission point operation normal ? _____

V. E. Observer: Bobbie Draughn

Certification Expiration: 4-25-85

Set No.	Time Start	Time End	Opacity Sum	Opacity Average
1	11:40 am	11:46	130	5.4
2	11:46	11:52	640	26.7
3	11:52	11:58	235	9.8

Overall Average: 14.0

	Initial	Final
Distance to discharge	2 Lengths	
Direction to discharge	N	
Height of observation point	Ground	
Height of discharge	225 ft	
Plume color	Gray	
Plume background	Gray Sky	
Water vapor in plume ?		
Wind direction (from)	SE	
Wind speed	10 mph	
Ambient temperature	81°	
Discharge temperature		
Sky conditions	PC	

Min.	Seconds 0	15	30	45
0	5	5	10	10
1	5	5	5	5
2	5	5	5	5
3	5	5	5	5
4	5	5	5	5
5	5	5	5	5
0	20	30	10	20
1	10	10	15	15
2	25	25	100	100
3	100	30	20	25
4	20	20	10	10
5	10	5	5	5
0	5	5	5	5
1	5	10	10	10
2	10	10	10	25
3	10	20	20	10
4	10	10	10	10
5	10	5	5	5

Diagram Of Observation/Discharge Point

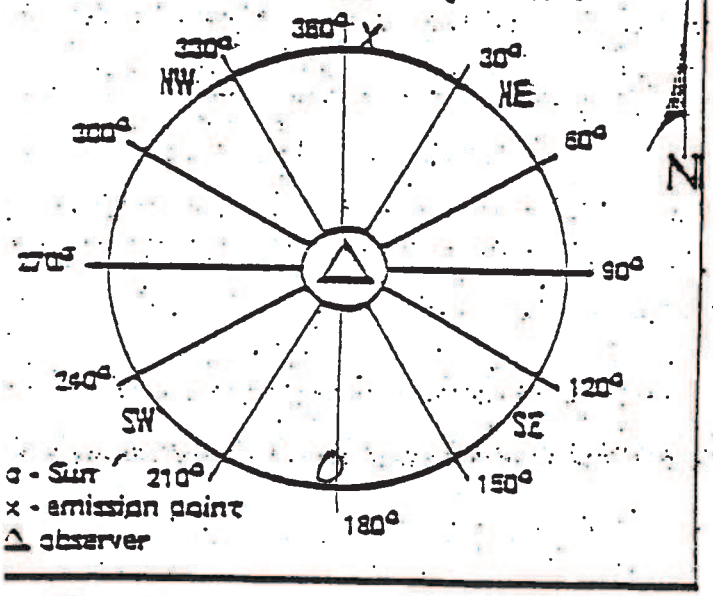

Remarks: _____

Received By: _____

Visible Emissions Evaluation Reco.

Plant Name: Hercules Inc.

Address: West 7th St.

City: Hattiesburg Miss.

Emission Point: 009

Date: 4-19-85

Is emission point operation normal ?

V. E. Observer: Bobbie Donaghon

Certification Expiration: 4-25-85

Set No.	Time		Opacity	
	Start	End	Sum	Average
1	11:40 Am	11:46	225	9.4
2	11:46	11:52	920	38.3
3	11:52	11:58 Am	715	29.8

Overall Average: 25.8

	Initial	Final
Distance to discharge	2 Lengths	
Direction to discharge	N	
Height of observation point	Ground	
Height of discharge	200 ft.	
Plume color	Gray	
Plume background	Gray Sky	
Water vapor in plume?		
Wind direction (from)	SE	
Wind speed	10 mph	
Ambient temperature	81°	
Discharge temperature		
Sky conditions	PC	

Min.	Seconds 0	15	30	45
0	10	10	10	15
1	10	10	10	10
2	10	10	15	10
3	10	10	10	10
4	10	10	5	10
5	5	5	5	5
0	5	5	5	5
1	5	5	5	5
2	5	5	5	5
3	5	5	5	95
4	100	100	100	100
5	100	100	100	50
0	60	50	50	40
1	30	20	20	20
2	20	15	15	15
3	25	25	15	5
4	5	10	5	10
5	30	60	70	100

Diagram Of Observation/Discharge Point

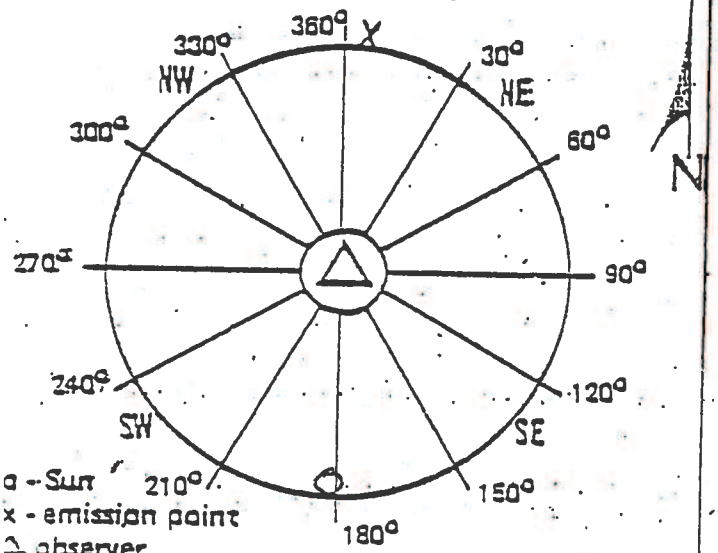

Remarks:

DATE 4-19-85

BOILER ROOM ENVIRONMENTAL LOG SHEET

Cleaned Fires		7 - 3 Shift	3 - 11 Shift	11 - 7 Shift
No. 1 Boiler	Started		7:00	2:40
	Stopped		8:00	3:55
No. 2 Boiler	Started			
	Stopped			
No. 3 Boiler	Started		3:15	11:15
	Stopped		4:15	12:30
No. 4 Boiler	Started		4:45	1:00
	Stopped		6:00	2:10

Comments on Boiler Operation

OPACITY EVALUATION - WOOD BURNING BOILERS

BOILER NO. 1			BOILER NO. 2			BOILER NO. 3			BOILER NO. 4		
Time	Duration	Note	Time	Duration	Note	Time	Duration	Note	Time	Duration	Note
									5:00	5-5	2
									5:35	10-5	2

1. Cleaning Boile
2. Fuel Oil Adjustment
3. Load Changes
4. Meter Defect
5. Cleaning Meter Lenses
6. Wood

COMMENTS ON OPACITY & METER OPERATION

Visible Emissions Evaluation Reco:

Plant Name: Hercules Inc.

Address: West 7th St.

City: Hattiesburg Miss.

Emission Point: 010

Date: 4-18-85

Is emission point operation normal ? _____

V. E. Observer: Bobbie Dunaghin

Certification Expiration: 4-25-85

Set No.	Time		Opacity	
	Start	End	Sum	Average
1	10^{10}	10^{16}	1020	42.5
2	10^{16}	10^{22}	1090	45.4
3	10^{22}	10^{28}	130	5.4

Overall Average: 31.1

	Initial	Final
Distance to discharge	1 Engths	
Direction to discharge	N	
Height of observation point	Ground	
Height of discharge	225 ft	
Plume color	Gray	
Plume background	Blue Sky	
Water vapor in plume ?		
Wind direction (from)	SE	
Wind speed	5-10 mph	
Ambient temperature	81°	
Discharge temperature		
Sky conditions	Clear	

Seconds

Min.	0	15	30	45
0	40	40	35	35
1	40	40	30	30
2	30	30	30	35
3	30	30	35	35
4	70	70	70	60
5	50	45	50	40
6	50	45	45	60
7	50	55	55	50
8	45	40	45	40
9	50	50	45	45
10	40	40	50	50
11	40	40	35	25
12	15	5	5	5
13	5	5	5	5
14	5	5	5	5
15	5	5	5	5
16	5	5	5	5
17	5	5	5	5

Diagram Of Observation/Discharge Point:

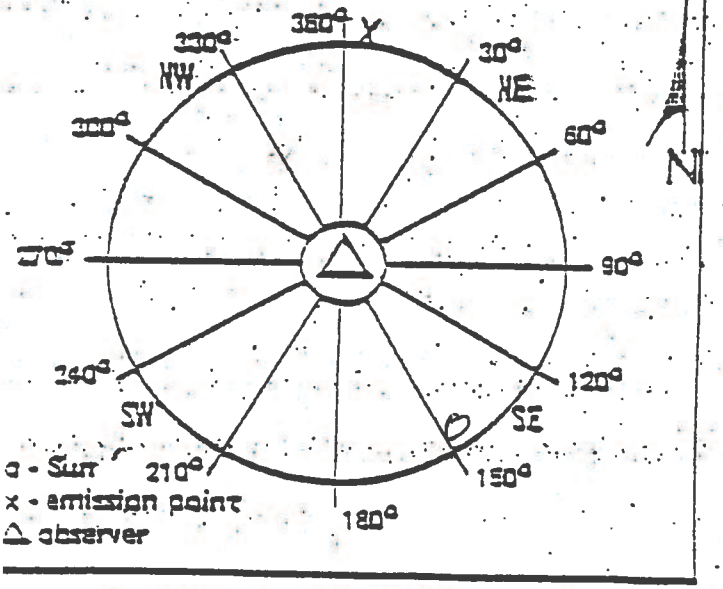

Remarks: _____

Received By: _____

DATE 4-18-85

BOILER ROOM ENVIRONMENTAL LOG SHEET

Cleaned Fires		7 - 3 Shift	3 - 11 Shift	11 - 7 Shift
No. 1 Boiler	Started	12.20	630	2:35
	Stopped	1:25	735	3:
No. 2 Boiler	Started	—	X	
	Stopped	—		
No. 3 Boiler	Started	7:00	300	11:05
	Stopped	8:20	[illegible]	12:15
No. 4 Boiler	Started	9:30	500	1:00
	Stopped	10:25	600	

Comments on Boiler Operation

OPACITY EVALUATION - WOOD BURNING BOILERS

BOILER NO. 1			BOILER NO. 2			BOILER NO. 3			BOILER NO. 4		
Time	Duration	Note	Time	Duration	Note	Time	Duration	Note	Time	Duration	Note
7:08	20-S	2							7:15	30-S	2
3 45	30 S	2							12:25	10-m	6
11:30 Pm	10-S	6							11:05 Pm	1-S	6
11:32 Pm	10-S	6							11:10 Pm	5-S	6
1:25 Am	15-S	2							2:00 Am	10-S	2
3:00 Am	20-S	1							2:58 Am	5-S	2

1. Cleaning Boile
2. Fuel Oil Adjustment
3. Load Changes
4. Meter Defect
5. Cleaning Meter Lenses
6. Wood

COMMENTS ON OPACITY & METER OPERATION

Visible Emissions Evaluation Reco

Plant Name: Hercules Inc.

Address: West 7th St.

City: Hattiesburg Miss.

Emission Point: 009

Date: 4-16-85

Is emission point operation normal ? _____

V. E. Observer: Bobbie Draughon

Certification Expiration: 4-25-85

Set No.	Time		Opacity	
	Start	End	Sum	Average
1	10^00	10^06	1000	41.7
2	10^06	10^12	945	39.4
3	10^12	10^18	805	33.5

Overall Average: 38.2

	Initial	Final
Distance to discharge	2 Lengths	
Direction to discharge	N	
Height of observation point	Ground	
Height of discharge	200 ft.	
Plume color	Grey	
Plume background	Blue Sky	
Water vapor in plume?		
Wind direction (from)	NE	
Wind speed	20 mph	
Ambient temperature	72°	
Discharge temperature		
Sky conditions	Clear	

Min.	Seconds 0	15	30	45
0	40	40	40	40
1	40	40	40	40
2	35	35	35	35
3	35	35	35	35
4	40	40	50	50
5	60	60	50	50
6	50	45	45	45
7	40	40	40	40
8	45	45	50	50
9	40	40	35	35
10	35	35	35	35
11	30	30	30	30
12	30	30	35	35
13	30	30	25	25
14	25	25	25	25
15	30	30	40	40
16	40	35	50	40
17	40	40	40	40

Diagram Of Observation/Discharge Point

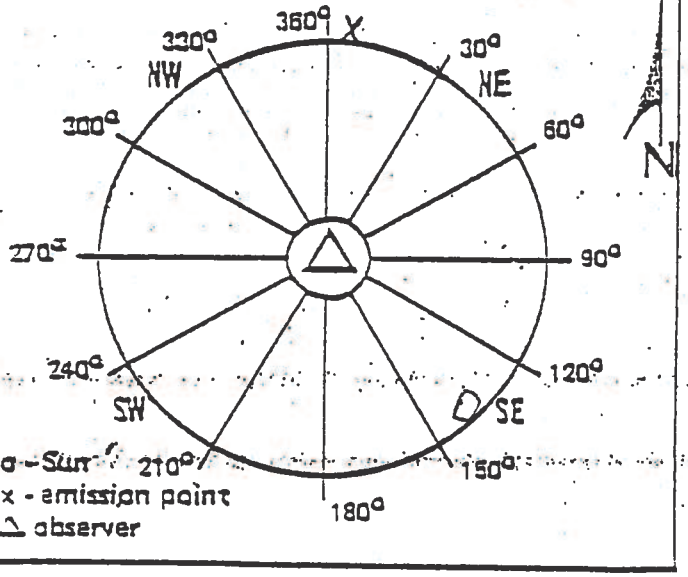

Remarks: _____

Received By: _____

DATE 4-16-85

BOILER ROOM ENVIRONMENTAL LOG SHEET

Cleaned Fires		7 - 3 Shift	3 - 11 Shift	11 - 7 Shift
No. 1 Boiler	Started	12:20	845	3:15
	Stopped	2:05	945	4:20
No. 2 Boiler	Started		X	
	Stopped			
No. 3 Boiler	Started	7:20	330	11:30
	Stopped	9:05	530	12:40
No. 4 Boiler	Started	9:45	630	1:30
	Stopped	11:15	733	2:30

Comments on Boiler Operation

OPACITY EVALUATION - WOOD BURNING BOILERS

BOILER NO. 1			BOILER NO. 2			BOILER NO. 3			BOILER NO. 4		
Time	Duration	Note	Time	Duration	Note	Time	Duration	Note	Time	Duration	Note
11:15	5-S	3				6P	30-S	2	11:12	30-S	2
									340	30S	2

1. Cleaning Boile
2. Fuel Oil Adjustment
3. Load Changes
4. Meter Defect
5. Cleaning Meter Lenses
6. Wood

COMMENTS ON OPACITY & METER OPERATION

Visible Emissions Evaluation Reco:

Plant Name: Hercules Inc.

Address: West 7th St.

City: Hi'burg Miss.

Emission Point: 009

Date: 4-12-85

Is emission point operation normal ? _____

V. E. Observer: Bobbie Draughon

Certification Expiration: 4-25-85

Set No.	Time		Opacity	
	Start	End	Sum	Average
1	934	940	720	30.0
2	940	946	570	23.8
3	946	952	1405	58.5

Overall Average: 37.4

	Initial	Final
Distance to discharge	2 Lengths	
Direction to discharge	N	
Height of observation point	Ground	
Height of discharge	200 ft.	
Plume color	Gray	
Plume background	Gray Sky	
Water vapor in plume ?		
Wind direction (from)	E	
Wind speed	10 mph	
Ambient temperature	70°	
Discharge temperature		
Sky conditions	Cloudy	

Min.	Seconds 0	15	30	45
0	10	10	15	15
1	15	15	15	15
2	15	15	40	30
3	40	40	50	50
4	50	50	40	40
5	40	40	40	30
0	30	30	30	30
1	25	25	25	25
2	20	20	25	20
3	20	20	20	20
4	20	20	25	20
5	20	20	25	35
0	35	35	35	35
1	35	40	35	40
2	40	40	60	75
3	80	90	100	100
4	90	90	80	60
5	60	50	50	50

Diagram Of Observation/Discharge Point

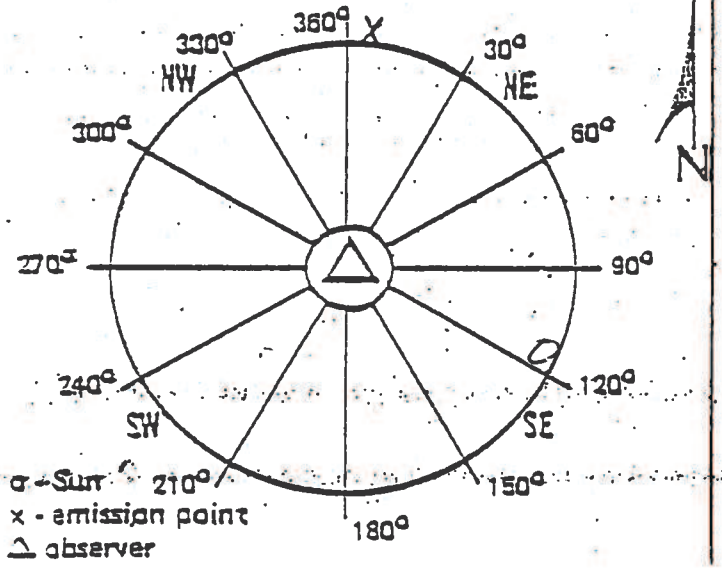

Remarks: _____

DATE 4-11-85

BOILER ROOM ENVIRONMENTAL LOG SHEET

Cleaned Fires		7 - 3 Shift	3 - 11 Shift	11 - 7 Shift
No. 1 Boiler	Started	11:45	8:15	2:45
	Stopped	1:20	9:25	3:45
No. 2 Boiler	Started	—	—	-
	Stopped		—	-
No. 3 Boiler	Started	7:20	3:45	11:15
	Stopped	8:40	5:20	12:30
No. 4 Boiler	Started	9:20	6:00	1:00
	Stopped	11:05	7:30	2:10

Comments on Boiler Operation 2 Hours of Smoke Visible - On Smoke reader

OPACITY EVALUATION - WOOD BURNING BOILERS

BOILER NO. 1			BOILER NO. 2			BOILER NO. 3			BOILER NO. 4		
Time	Duration	Note	Time	Duration	Note	Time	Duration	Note	Time	Duration	Note
4:30 pm	10-5	2				6:25 pm	30-5	4	6:00 pm	10-5	2
5:30 pm	10-5	2									

1. Cleaning Boile
2. Fuel Oil Adjustment
3. Load Changes
4. Meter Defect
5. Cleaning Meter Lenses
6. Wood

COMMENTS ON OPACITY & METER OPERATION

Visible Emissions Evaluation Reco

Plant Name: Hercules Inc.

Address: West 7th St.

City: Hattiesburg Miss.

Emission Point: 009

Date: 4-15-85

Is emission point operation normal ? _____

V. E. Observer: Bobbie Draughon

Certification Expiration: 4-25-85

Set No.	Time		Opacity	
	Start	End	Sum	Average
1	9^20	9^26	355	14.8
2	9^26	9^32	630	26.3
3	9^32	9^38	790	32.9

Overall Average: 24.7

	Initial	Final
Distance to discharge	2 Lengths	
Direction to discharge	N	
Height of observation point	Ground	
Height of discharge	200 ft.	
Plume color	Gray	
Plume background	Gray Sky	
Water vapor in plume?		
Wind direction (from)	SW	
Wind speed	10 mph	
Ambient temperature	71°	
Discharge temperature		
Sky conditions	PC	

Min.	Seconds 0	15	30	45
0	15	15	15	15
1	15	15	15	15
2	15	15	15	15
3	15	15	15	10
4	10	10	20	20
5	15	15	15	15
0	15	15	15	15
1	15	10	10	10
2	10	15	10	10
3	10	10	15	15
4	10	10	25	100
5	100	60	60	65
0	60	50	25	25
1	20	40	40	40
2	35	40	30	30
3	50	50	60	50
4	40	40	10	10
5	10	5	10	20

Diagram Of Observation/Discharge Point

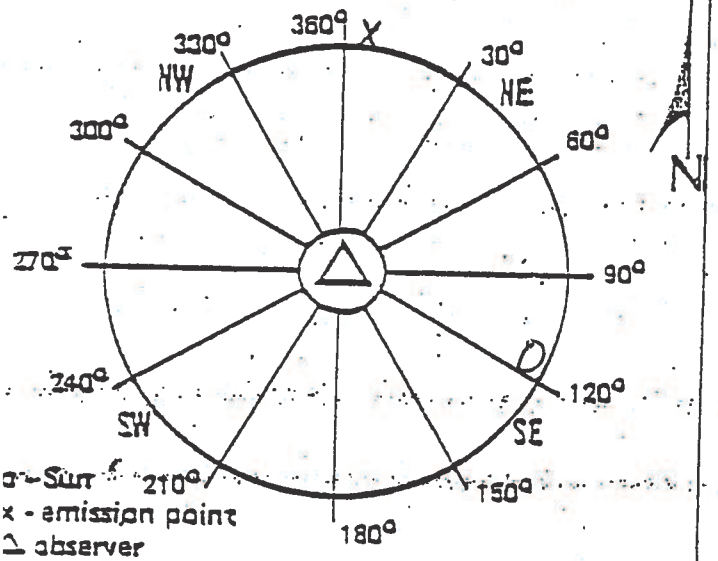

Remarks: _____

Visible Emissions Evaluation Recd:

Plant Name: Hercules Inc.

Address: West 7th St.

City: Aberdeen Miss.

Emission Point: 010

Date: 4-15-85

Is emission point operation normal ? _____

V. E. Observer: Bobbie Draughon

Certification Expiration: 4-25-85

Set No.	Time Start	Time End	Opacity Sum	Opacity Average
1	920	926	1140	47.5
2	926	932	1190	49.6
3	932	938	1150	47.9

Overall Average: 48.3

	Initial	Final
Distance to discharge	2 Engine	
Direction to discharge	N	
Height of observation point	Ground	
Height of discharge	225 ft	
Plume color	Gray	
Plume background	Gray Sky	
Water vapor in plume ?		
Wind direction (from)	SW	
Wind speed	10 mph	
Ambient temperature	71°	
Discharge temperature		
Sky conditions	Pc	

Min.	Seconds 0	15	30	45
0	30	30	35	40
1	35	35	35	35
2	40	40	30	30
3	30	30	35	70
4	50	50	40	40
5	90	100	90	100
0	60	50	100	100
1	50	60	50	40
2	60	40	40	40
3	70	50	60	40
4	40	40	30	40
5	40	30	30	30
0	30	30	30	60
1	70	60	60	80
2	90	60	75	75
3	100	100	60	20
4	15	15	15	15
5	15	25	25	25

Diagram Of Observation/Discharge Point:

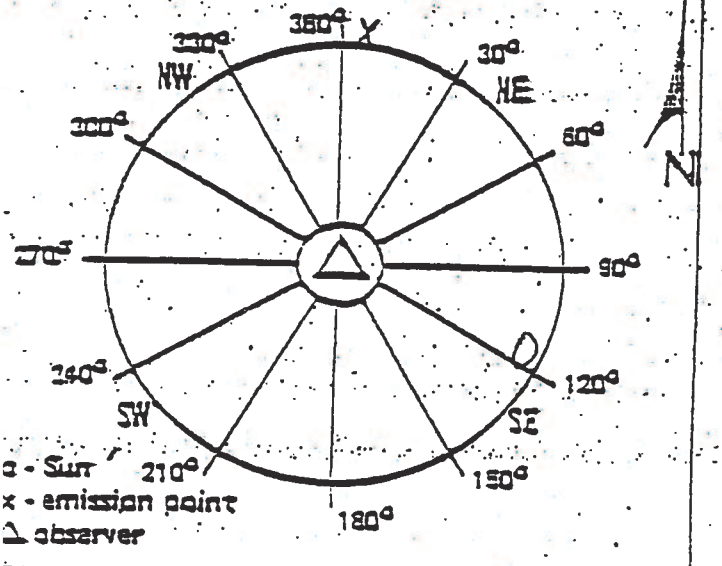

Remarks: _____

Received By: _____

DATE 4-15-85

BOILER ROOM ENVIRONMENTAL LOG SHEET

Cleaned Fires		7 - 3 Shift	3 - 11 Shift	11 - 7 Shift
No. 1 Boiler	Started	12:25	900	2:45
	Stopped	2:25	1010	3:45
No. 2 Boiler	Started		X	
	Stopped	—		
No. 3 Boiler	Started	7:10	345	11:15
	Stopped	9:00	620	12:30
No. 4 Boiler	Started	10:00	720	1:15
	Stopped	11:30	830	2:15

Comments on Boiler Operation

OPACITY EVALUATION - WOOD BURNING BOILERS

BOILER NO. 1			BOILER NO. 2			BOILER NO. 3			BOILER NO. 4			
Time	Duration	Note	Time	Duration	Note	Time	Duration	Note	Time	Duration	Note	1. Cleaning Boile
7:24	30-S	4				605	3-M	1	7:27	30-S	6	2. Fuel Oil Adjustment
9:30	1-M	2							8:43	30-S	6	3. Load Changes
3:15	10-S	3							11:57	20-S	2	4. Meter Defect
									3:10	20-S	3	5. Cleaning Meter Lenses
									1:00	3-S	2	6. Wood

COMMENTS ON OPACITY & METER OPERATION

Visible Emissions Evaluation Reco

Plant Name: Hercules, Inc.

Address: West 7th St.

City: Hi Long Miss.

Emission Point: 010

Date: 4-10-85

Is emission point operation normal ? _____

V. E. Observer: Bobbie Draughn

Certification Expiration: 4-25-85

Set No.	Time Start	Time End	Opacity Sum	Opacity Avera
1	10^{33}	10^{39}	780	32.5
2	10^{39}	10^{45}	895	37.3
3	10^{45}	10^{51}	1165	48.5

Overall Average: 39.4

	Initial	Final
Distance to discharge	2 Lengths	
Direction to discharge	N	
Height of observation point	Ground	
Height of discharge	225 ft	
Plume color	Gray	
Plume background	Blue Sky	
Water vapor in plume ?		
Wind direction (from)	NE	
Wind speed	10 mph	
Ambient temperature	68°	
Discharge temperature		
Sky conditions	Clear	

Diagram Of Observation/Discharge Point

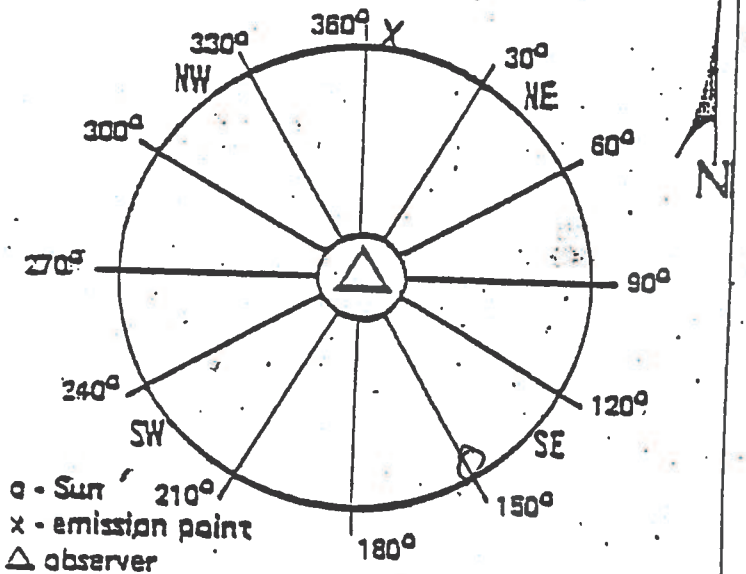

Min:	Seconds 0	15	30	45
0	30	30	30	30
1	25	25	30	30
2	25	25	30	40
3	35	35	35	35
4	35	35	40	40
5	35	35	35	35
0	35	35	35	35
1	35	35	35	35
2	35	35	40	40
3	40	40	40	40
4	40	40	40	40
5	40	35	35	35
0	50	70	50	40
1	40	50	50	60
2	60	50	55	50
3	50	50	60	40
4	50	40	40	50
5	40	40	40	40

Remarks: _____

DATE 4-10-85

BOILER ROOM ENVIRONMENTAL LOG SHEET

Cleaned Fires		7 - 3 Shift	3 - 11 Shift	11 - 7 Shift
No. 1 Boiler	Started		7:20	
	Stopped		8:55	
No. 2 Boiler	Started			
	Stopped			
No. 3 Boiler	Started	7:00 START	3:10	11:20
	Stopped	2:45	4:30	12:30
No. 4 Boiler	Started	8:20	5:30	1:15
	Stopped	9:00	6:55	2:30

Comments on Boiler Operation

OPACITY EVALUATION - WOOD BURNING BOILERS

BOILER NO. 1			BOILER NO. 2			BOILER NO. 3			BOILER NO. 4		
Time	Duration	Note	Time	Duration	Note	Time	Duration	Note	Time	Duration	Note
2:30	3Sec	2							7:15 pm	20-5	2
3:35 pm	10-5	2									
1:10 pm	15-5	2									
7:25 pm	10-5	2									

1. Cleaning Boile
2. Fuel Oil Adjustment
3. Load Changes
4. Meter Defect
5. Cleaning Meter Lenses
6. Wood

COMMENTS ON OPACITY & METER OPERATION

Visible Emissions Evaluation Recd

Plant Name: Hercules Inc.

Address: West 7th St.

City: Hattiesburg Miss.

Emission Point: 010

Date: 4-8-85

Is emission point operation normal ? _____

V. E. Observer: Bobbie Daughdrill

Certification Expiration: 4-25-85

Set No.	Time Start	Time End	Opacity Sum	Opacity Average
1	12:30 pm	12:26	880	36.7
2	12:26	12:32	890	37.1
3	12:32	12:38	630	26.3

Overall Average: 33.4

	Initial	Final
Distance to discharge	2 Lengths	
Direction to discharge	N	
Height of observation point	Ground	
Height of discharge	225 ft	
Plume color	Gray	
Plume background	Blue Sky	
Water vapor in plume ?		
Wind direction (from)	N	
Wind speed	10-15 mph	
Ambient temperature	69°	
Discharge temperature		
Sky conditions	PC	

Min.	Seconds 0	15	30	45
0	40	40	40	40
1	35	35	40	40
2	35	35	30	30
3	25	25	35	35
4	35	35	35	35
5	40	50	40	50
6	50	60	60	60
7	50	60	60	40
8	40	30	30	30
9	30	30	30	30
10	25	25	25	25
11	25	25	25	25
12	25	25	25	25
13	25	25	25	25
14	20	20	25	25
15	20	20	20	30
16	30	30	30	30
17	35	35	30	30

Diagram Of Observation/Discharge Point

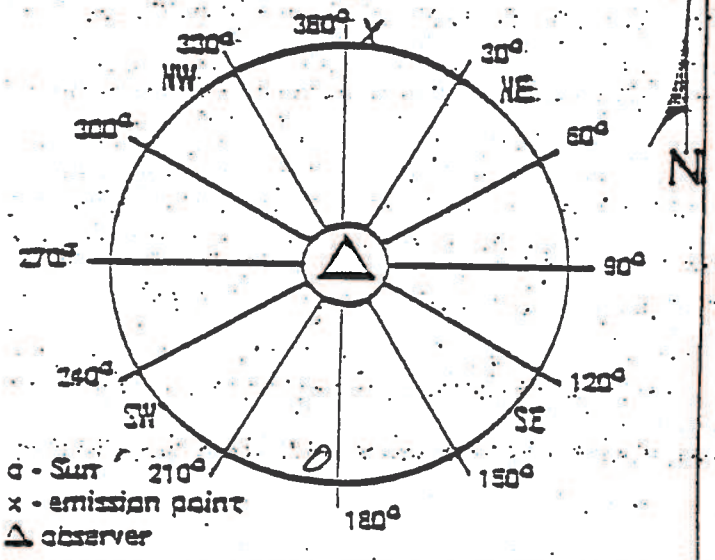

Remarks: _____

Received By: _____

DATE 4/8/85

BOILER ROOM ENVIRONMENTAL LOG SHEET

Cleaned Fires		7 - 3 Shift	3 - 11 Shift	11 - 7 Shift
. Boiler	Started	12:10		2:10
	Stopped	2:00		3:15
! Boiler	Started			X
	Stopped			
Boiler	Started	7:30		10:45
	Stopped	9:15		11:45
- Boiler	Started	9:45		12:30
	Stopped	11:20		1:15

nts on Boiler Operation

OPACITY EVALUATION - WOOD BURNING BOILERS

OILER NO. 1		BOILER NO. 2			BOILER NO. 3			BOILER NO. 4			
Duration	Note	Time	Duration	Note	Time	Duration	Note	Time	Duration	Note	
/-m	2										1.Cleaning Boile
											2.Fuel Oil Adjustment
											3.Load Changes
											4.Meter Defect
											5.Cleaning Meter Lenses
											6. Wood

NTS ON OPACITY & METER OPERATION

Visible Emissions Evaluation Reco: Howard Sumrall

Plant Name: Hercules Inc.

Address: West 7th St.

City: Hattiesburg Miss.

Emission Point: 010

Date: 4-4-85

V. E. Observer: ~~Bobbie Broughton~~

Certification Expiration: 4-25-85

Is emission point operation normal ? _____

Set No.	Time Start	Time End	Opacity Sum	Opacity Average
1	10:40 AM	10:46 AM	2135	89.0
2	10:46 AM	10:52 AM	2090	87.1
3	10:52 AM	10:58 AM	1930	80.4

Overall Average: 85.5

	Initial	Final
Distance to discharge	1 Engine	
Direction to discharge	N	
Height of observation point	Ground	
Height of discharge	225 ft	
Plume color	BROWN	
Plume background	Blue	
Water vapor in plume ?		
Wind direction (from)	SOUTH	
Wind speed	5-10 MPH	
Ambient temperature	76.0 F	
Discharge temperature		
Sky conditions	Clear	

Seconds

Min.	0	15	30	45
0	70	70	80	90
1	90	100	100	100
2	90	80	80	90
3	90	90	80	80
4	75	100	100	90
5	90	100	100	100
0	100	100	100	100
1	100	90	90	90
2	80	80	70	80
3	90	90	80	80
4	80	80	90	90
5	90	80	80	80
0	90	100	100	100
1	100	80	70	70
2	70	70	60	60
3	70	70	80	90
4	75	75	80	90
5	80	80	80	90

Diagram Of Observation/Discharge Point:

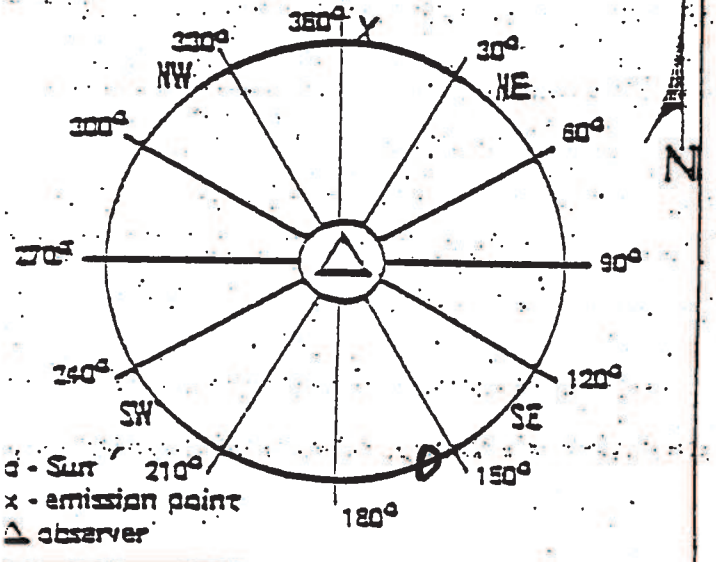

Remarks: _____

Received By: _____

Van Rees

Visible Emissions Evaluation Reco

Plant Name: Hercules Inc.

Address: West 7th St.

City: H'burg Miss.

Emission Point: 009

Date: 4-4-85

Is emission point operation normal ?

V. E. Observer: ~~Bobbie Draughn~~ Howard Sumrall

Certification Expiration: 4-25-85

Set No.	Time Start	Time End	Opacity Sum	Opacity Average
1	10:40 Am	10:46 Am	585	24.4
2	10:46 Am	10:52 Am	275	11.5
3	10:52 Am	10:58 Am	325	13.5

Overall Average: 16.5

	Initial	Final
Distance to discharge	2 Lengths	
Direction to discharge	N	
Height of observation point	Ground	
Height of discharge	200 ft.	
Plume color	White	
Plume background	Blue	
Water vapor in plume ?		
Wind direction (from)	SOUTH	
Wind speed	5-10	MPH
Ambient temperature	76°F	
Discharge temperature		
Sky conditions	Clear	

Min.	Seconds 0	15	30	45
0	70	80	50	50
1	50	20	15	15
2	15	15	15	15
3	15	15	15	15
4	15	15	15	20
5	15	15	10	10
0	10	10	10	10
1	10	10	20	20
2	15	15	15	10
3	10	10	10	10
4	10	10	10	10
5	10	10	10	10
0	10	10	10	10
1	10	15	15	20
2	20	15	15	15
3	10	10	10	10
4	15	15	15	15
5	15	15	15	15

Diagram Of Observation/Discharge Point

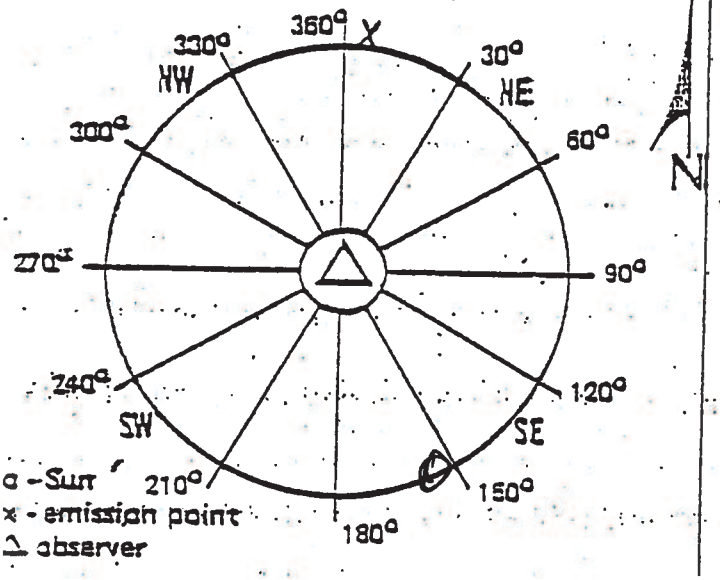

Remarks:

DATE 4/4/85

BOILER ROOM ENVIRONMENTAL LOG SHEET

Cleaned Fires		7 - 3 Shift	3 - 11 Shift	11 - 7 Shift
No. 1 Boiler	Started	11:45	7:10	3:55
	Stopped	1:00	8:25	5:35
No. 2 Boiler	Started	-		
	Stopped	-		
No. 3 Boiler	Started	7:15	2:50	11:30
	Stopped	8:45	4:15	12:55
No. 4 Boiler	Started	9:30	5:00	1:45
	Stopped	10:40	6:15	3:05

Comments on Boiler Operation

OPACITY EVALUATION - WOOD BURNING BOILERS

BOILER NO. 1			BOILER NO. 2			BOILER NO. 3			BOILER NO. 4		
Time	Duration	Note	Time	Duration	Note	Time	Duration	Note	Time	Duration	Note
7:22	3-5	2									
10:34	5-5	2									
10:43	3-5	2									

1. Cleaning Boile
2. Fuel Oil Adjustment
3. Load Changes
4. Meter Defect
5. Cleaning Meter Lenses
6. Wood

COMMENTS ON OPACITY & METER OPERATION

Visible Emissions Evaluation Reco: Howard Sunnall

Plant Name: Hercules Inc.

V. E. Observer: ~~Robbie Draughn~~

Address: West 7th St.

Certification Expiration: 4-25-85

City: H'burg Miss.

Emission Point: 010

Date: 4-3-85

Is emission point operation normal ? _____

Set No.	Time Start	Time End	Opacity Sum	Opacity Average
1	12:40 Pm	12:46 Pm	1105	46.0
2	12:46 Pm	12:52 Pm	815	34.0
3	12:52 Pm	12:58 Pm	920	38.3

Overall Average: 39.4

	Initial	Final
Distance to discharge	2 Lengths	
Direction to discharge	N	
Height of observation point	Ground	
Height of discharge	225 ft	
Plume color	White	
Plume background	Blue	
Water vapor in plume ?		
Wind direction (from)	S-W	
Wind speed	5-10	MPH
Ambient temperature	78°F	
Discharge temperature		
Sky conditions	Clear	

Min.	Seconds 0	15	30	45
0	50	50	75	90
1	90	90	90	70
2	70	50	40	60
3	60	30	20	20
4	20	20	20	20
5	20	20	15	15
0	25	15	15	15
1	15	15	15	15
2	25	50	15	35
3	75	80	40	80
4	70	50	50	35
5	25	25	15	15
0	15	15	15	25
1	30	30	35	30
2	30	50	30	35
3	25	30	25	20
4	15	40	70	85
5	70	50	75	75

Diagram Of Observation/Discharge Point

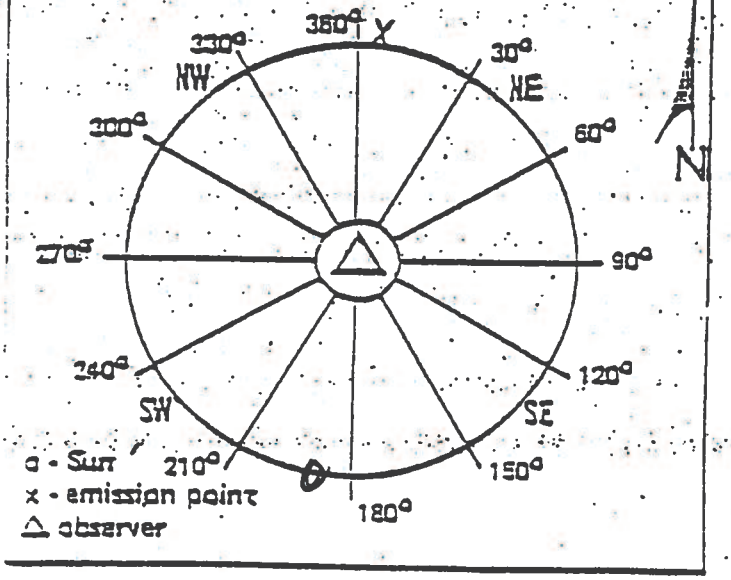

Remarks: _____

Received By: _____

DATE 4-3-85

BOILER ROOM ENVIRONMENTAL LOG SHEET

Cleaned Fires		1st ½ 7 - 3 Shift	2nd ½	3 - 11 Shift	11 - 7 Shift
No. 1 Boiler	Started	1130	1230	8:00	410
	Stopped	1200	1:00	9:10	540
No. 2 Boiler	Started	—		—	X
	Stopped	—		—	
No. 3 Boiler	Started	7:00		3:15	1110
	Stopped	7:50		4:30	1250
No. 4 Boiler	Started	9:00		5:30	140
	Stopped	10:05		6:40	320

Comments on Boiler Operation

3 & 4 Smoke dector Not Working

1# Smoke dector doesn't Blow Horn

OPACITY EVALUATION - WOOD BURNING BOILERS

BOILER NO. 1			BOILER NO. 2			BOILER NO. 3			BOILER NO. 4		
Time	Duration	Note	Time	Duration	Note	Time	Duration	Note	Time	Duration	Note
1200	10-5	3									

1. Cleaning Boile
2. Fuel Oil Adjustment
3. Load Changes
4. Meter Defect
5. Cleaning Meter Lenses
6. Wood

COMMENTS ON OPACITY & METER OPERATION

BOILER ROOM ENVIRONMENTAL LOG SHEET

DATE _____

BOILER		7-3 SHIFT CLEANING FIRES	7-3 SHIFT START UP COMPLETE	3-11 SHIFT CLEANING FIRES	3-11 SHIFT START UP COMPLETE	11-7 SHIFT CLEANING FIRES	11-7 SHIFT START UP COMPLETE
#1	STARTED						
	STOPPED						
#2	STARTED						
	STOPPED						
#3	STARTED						
	STOPPED						
#4	STARTED						
	STOPPED						

COMMENTS ON BOILER OPERATIONS

BOILER	7-3 SHIFT	3-11 SHIFT	11-7 SHIFT
#1			
#2			
#3			
#4			

Mississippi Department of [illegible]
Bureau of Pollution Control
Visible Emissions Evaluation Record

Plant Name: _____

Address: _____

City: _____

Emission Point: _____

Date: _____

Is emission point operation normal ? _____

V. E. Observer: _____

Certification Expiration: _____

Set No.	Time		Opacity	
	Start	End	Sum	Average

Overall Average: _____

	Initial	Final
Distance to discharge		
Direction to discharge		
Height of observation point		
Height of discharge		
Plume color		
Plume background		
Water vapor in plume ?		
Wind direction (from)		
Wind speed		
Ambient temperature		
Discharge temperature		
Sky conditions		

Min.	Seconds 0	15	30	45
0				
1				
2				
3				
4				
5				
0				
1				
2				
3				
4				
5				
0				
1				
2				
3				
4				
5				

Diagram Of Observation/Discharge Point

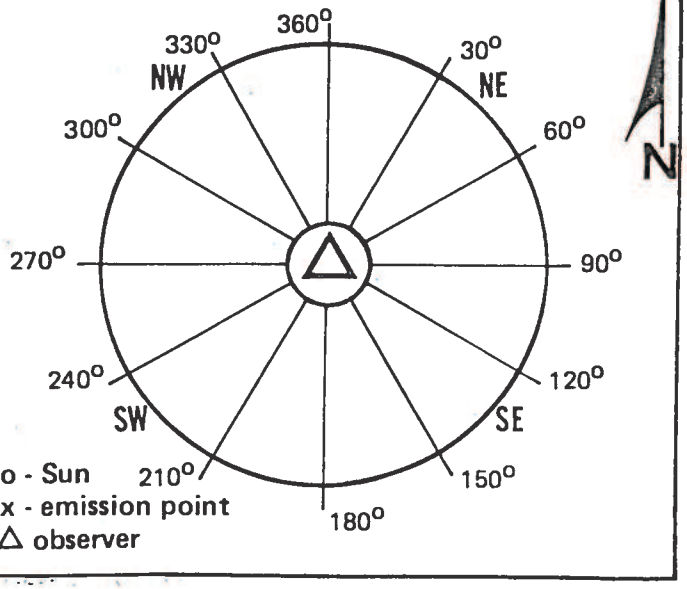

SET NO.	REMARKS
1	
2	
3	

Received By: _____

Hercules Incorporated
West 7th Street
P.O. Box 1937
Hattiesburg, MS 39401
(601) 545-3450

April 15, 1985

RECEIVED
APR 16 1985
DEPT. OF NATURAL RESOURCE
BUREAU OF POLLUTION CONTROL

Mr. Dwight K. Wylie, P.E. Chief
Air Division
Bureau of Pollution Control
P. O. Box 10385
Jackson, Mississippi 39209

Dear Mr. Wylie:

In reference to operating permit No. 0800-0001, please find the attached monthly report detailing the compliance status of the boilers for emission points 009 and 010.

We will continue to submit this report on a monthly basis.

Very truly yours,

Charles Jordan
Environmental Coordinator

CSJ:sw

Attachments

4/11/85

To: C.S. Jordan

From: R.A. Van Beek

Operating Permit No. 00800-00001 Hattiesburg, MS
Issued For The Operation of Air Emissions Equipment

In reference to the above permit, Part III, Other Requirements, 1-C,the following monthly report is for March, 1985.

The report details the complaince status of the boilers with copies of all visible emissions evaluations in which <u>any</u> reading exceeds 40% opacity.

Total number of VEE copies attached = 13.

In addition, copies of log sheets are attached for all visible emission evaluations when opacity exceeds 40% for two minutes or more.

Number of log sheets attached = 7.

Visible Emissions Evaluation Reco

Plant Name: Hercules Inc.

Address: West 7th St.

City: H'burg Miss.

Emission Point: 010

Date: 3-28-85

Is emission point operation normal ?

	Initial	Final
Distance to discharge	2 Lengths	
Direction to discharge	N	
Height of observation point	Ground	
Height of discharge	225 ft	
Plume color	Gray	
Plume background	Blue	Sky
Water vapor in plume ?	--	
Wind direction (from)	S	
Wind speed	20-25 mph	
Ambient temperature	83°	
Discharge temperature		
Sky conditions	Pc	

V. E. Observer: Bobbie Draughn

Certification Expiration: 4-25-85

Set No.	Time Start	Time End	Opacity Sum	Opacity Average
1	12 17 pm	12 23	1160	48.3
2	12 23	12 29	1595	66.5
3	12 29	12 35 pm	440	18.3

Overall Average: 44.4

Min.	Seconds 0	15	30	45
0	40	40	40	30
1	25	80	20	20
2	25	15	15	25
3	25	40	40	30
4	100	100	100	70
5	40	40	100	100
0	100	100	100	100
1	100	100	90	40
2	60	100	30	40
3	30	40	100	80
4	90	100	50	40
5	30	25	25	25
0	40	30	30	10
1	40	30	40	40
2	10	30	20	20
3	10	20	10	5
4	5	5	5	5
5	5	10	10	10

Diagram Of Observation/Discharge Point

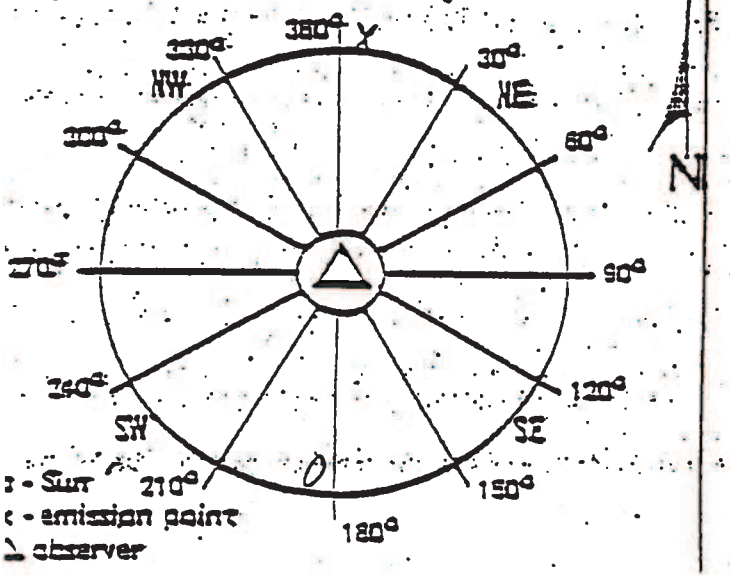

o - Sun
x - emission point
△ observer

Remarks:

DATE 3-2-85

BOILER ROOM ENVIRONMENTAL LOG SHEET

Cleaned Fires		7 - 3 Shift	3 - 11 Shift	11 - 7 Shift
No. 1 Boiler	Started	8 4 0	5:15	
	Stopped	12 - -	6:20	
No. 2 Boiler	Started			
	Stopped			
No. 3 Boiler	Started		3:00	
	Stopped			
No. 4 Boiler	Started		3:30	
	Stopped			

Comments on Boiler Operation

OPACITY EVALUATION - WOOD BURNING BOILERS

BOILER NO. 1			BOILER NO. 2			BOILER NO. 3			BOILER NO. 4			
Time	Duration	Note	Time	Duration	Note	Time	Duration	Note	Time	Duration	Note	1.Cleaning Boile
												2.Fuel Oil Adjustment
												3.Load Changes
												4.Meter Defect
												5.Cleaning Meter Lenses
												6. Wood

COMMENTS ON OPACITY & METER OPERATION

Visible Emissions Evaluation Reco

Plant Name: Hercules Inc.

Address: West 7th St.

City: Hattiesburg Miss.

Emission Point: 009

Date: 3-22-85

Is emission point operation normal ?

V. E. Observer: Bobbie Donaghon

Certification Expiration: 4-25-85

Set No.	Time		Opacity	
	Start	End	Sum	Average
1	8^23 Am	8^29	370	15.4
2	8^29	8^35	500	20.8
3	8^35	8^41 Am	810	33.8

Overall Average: 23.3

	Initial	Final
Distance to discharge	2 Lengths	
Direction to discharge	N	
Height of observation point	Ground	
Height of discharge	200 ft.	
Plume color	Gray	
Plume background	Gray Sky	
Water vapor in plume?		
Wind direction (from)	W	
Wind speed	10-15	mph
Ambient temperature	59°	
Discharge temperature		
Sky conditions	Cloudy	

Min.	Seconds 0	15	30	45
0	10	10	10	10
1	10	10	20	20
2	20	20	15	15
3	20	20	20	20
4	15	15	15	15
5	15	15	15	15
6	25	25	20	20
7	20	20	25	20
8	20	20	20	20
9	20	20	20	20
10	20	15	15	15
11	20	20	30	30
12	30	30	25	25
13	40	45	50	55
14	60	70	100	100
15	80	40	10	10
16	5	5	5	5
17	5	5	5	5

Diagram Of Observation/Discharge Point

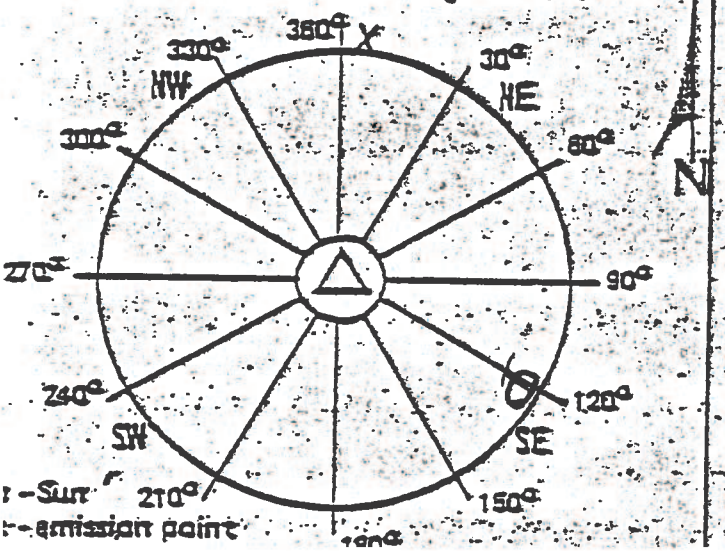

S - Sun
E - emission point

Remarks:

Visible Emissions Evaluation Recs

Plant Name: Hercules, Inc.

Address: West 7th St.

City: Hattiesburg Miss.

Emission Point: 010

Date: 3-22-85

Is emission point operation normal? _____

V. E. Observer: Bobbie Donaghey

Certification Expiration: 4-25-85

Set No.	Time Start	Time End	Opacity Sum	Opacity Average
1	8:23 Am	8:29	440	18.3
2	8:29	8:35	465	19.4
3	8:35	8:41 Am	1225	51.0

Overall Average: 29.6

	Initial	Final
Distance to discharge	2 Lengths	
Direction to discharge	N	
Height of observation point	Ground	
Height of discharge	225 ft	
Plume color	Gray	
Plume background	Gray Sky	
Water vapor in plume?		
Wind direction (from)	W	
Wind speed	10-15 mph	
Ambient temperature	59°	
Discharge temperature		
Sky conditions	Cloudy	

Min.	Seconds 0	15	30	45
0	10	15	15	10
1	15	15	20	20
2	20	20	20	20
3	20	20	20	20
4	20	20	20	20
5	20	20	20	20
6	20	20	25	25
7	20	20	20	20
8	20	20	20	20
9	20	20	20	20
10	15	15	15	15
11	15	15	20	25
12	35	40	35	40
13	35	35	25	25
14	25	20	20	20
15	20	20	100	100
16	100	90	100	90
17	50	50	60	90

Diagram Of Observation/Discharge Point

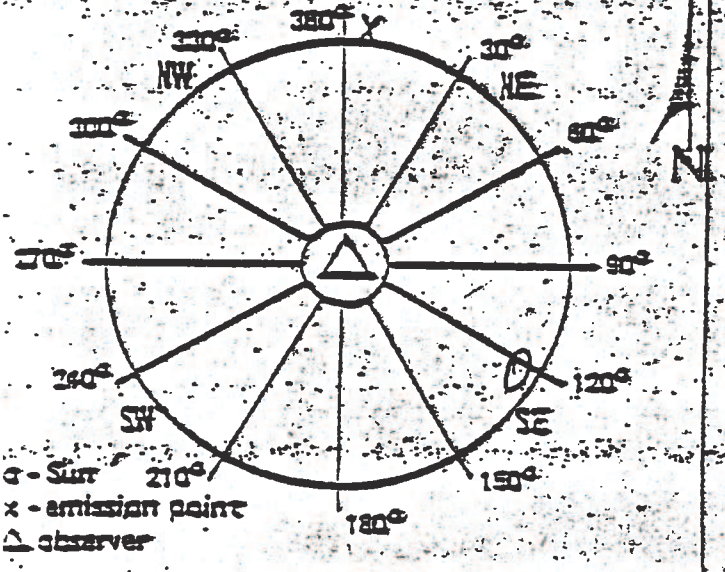

Remarks: _____

Received By: _____

Date 3-22-

BOILER ROOM ENVIRONMENTAL LOG SHEET

Cleaned Fires		7 - 3 Shift	3 - 11 Shift	11 - 7 Shift
No. 1 Boiler	Started	10:00	5:30	1:10
	Stopped	10:45	6:45	9:20
No. 2 Boiler	Started	—	—	—
	Stopped	—	—	—
No. 3 Boiler	Started	11:50	7:30	2:15
	Stopped	12:35	8:40	3:05
No. 4 Boiler	Started	7:30	3:30	11:30
	Stopped	8:55	4:05	12:40

Comments on Boiler Operation

OPACITY EVALUATION - WOOD BURNING BOILERS

BOILER NO. 1			BOILER NO. 2			BOILER NO. 3			BOILER NO. 4		
Time	Duration	Note	Time	Duration	Note	Time	Duration	Note	Time	Duration	Note
5:35	20-5	6									

1. Cleaning Boil
2. Fuel Oil Adjustment
3. Load Changes
4. Meter Defect
5. Cleaning Mete Lenses
6. Wood

COMMENTS ON OPACITY & METER OPERATION

Visible Emissions Evaluation Record

Plant Name: Hercules Inc.

Address: 1 West 7th St.

City: Hattiesburg Miss.

Emission Point: 010

Date: 3-21-85

Is emission point operation normal? _____

V. E. Observer: Bobbie Donahoe

Certification Expiration: 4-25-85

Set No.	Time Start	Time End	Opacity Sum	Opacity Average
1	12:24 pm	12:29	1175	49.0
2	12:29	12:34	535	22.3
3	12:34	12:40 pm	735	30.6

Overall Average: 34.0

	Initial	Final
Distance to discharge	1 Engle	
Direction to discharge	W	
Height of observation point	Ground	
Height of discharge	225 Ft	
Plume color	Gray	
Plume background	Gray	Sky
Water vapor in plume?		
Wind direction (from)	S	
Wind speed	15-20 mph	
Ambient temperature	76°	
Discharge temperature		
Sky conditions	PC	

Min.	Seconds 0	15	30	45
0	35	35	35	30
1	40	50	50	50
2	90	80	70	80
3	40	30	30	30
4	30	50	50	40
5	30	30	80	90
6	80	60	40	50
7	35	20	20	20
8	25	25	25	25
9	20	20	10	10
10	10	10	5	5
11	5	5	5	5
12	10	15	15	25
13	40	40	40	30
14	30	30	30	20
15	25	25	15	10
16	10	25	40	50
17	50	40	50	70

Diagram Of Observation/Discharge Point:

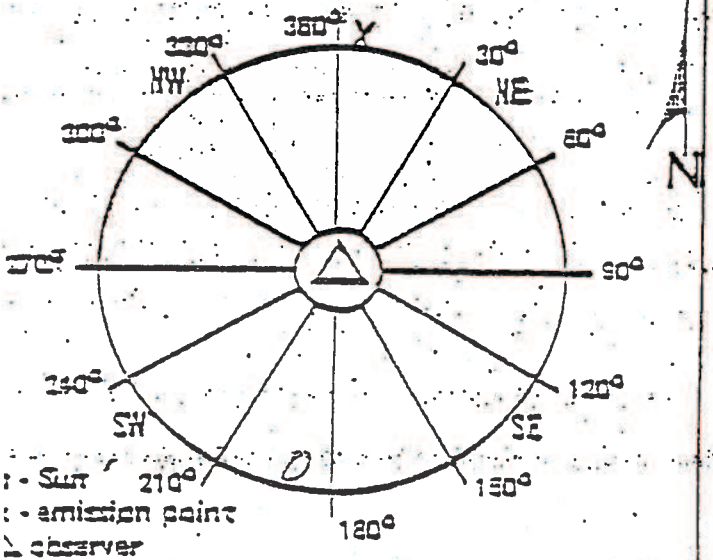

Remarks: _____

Received By: _____

Visible Emissions Evaluation Reco

int Name: Hercules Inc.

dress: West 7th St.

y: Hattiesburg Miss.

ission Point: 009

e: 3-19-85

mission point operation normal ?

	Initial	Final
tance to discharge	2 Lengths	
ection to discharge	N	
ight of observation point	Ground	
ight of discharge	200 ft.	
me color	Gray	
me background	Blue Sky	
ter vapor in plume?		
nd direction (from)	SE	
nd speed	5 mph	
bient temperature	56°	
charge temperature		
/ conditions	Clear	

V. E. Observer: Bobbie Draughon

Certification Expiration: 4-25-85

Set No.	Time Start	Time End	Opacity Sum	Opacity Average
1	8:50 AM	8:54	535	22.3
2	8:54	9:02	1310	54.6
3	9:02	9:08 AM	365	15.2

Overall Average: 30.7

Min.	Seconds 0	15	30	45
0	20	20	20	20
1	20	20	20	20
2	20	20	25	20
3	20	20	20	20
4	20	20	25	25
5	20	25	35	40
0	50	50	45	50
1	55	60	50	45
2	45	40	40	50
3	35	50	70	85
4	75	70	80	90
5	60	40	35	40
0	30	20	20	20
1	15	15	15	15
2	15	15	15	15
3	15	15	15	15
4	15	15	10	10
5	10	10	10	15

Remarks:

agram Of Observation/Discharge Point

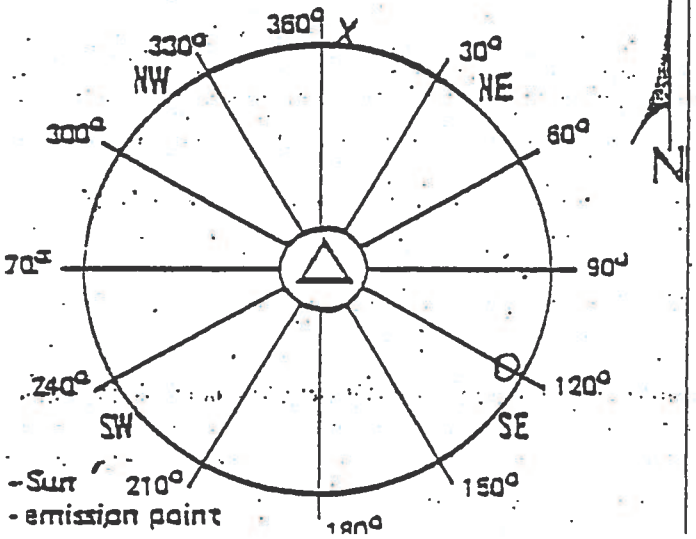

Date 3-[illegible]-[illegible]

BOILER ROOM ENVIRONMENTAL LOG SHEET

Cleaned Fires		7 - 3 Shift	3 - 11 Shift	11 - 7 Shift
No. 1 Boiler	Started	[illegible]		3:30
	Stopped	[illegible]		5:10
No. 2 Boiler	Started	1:20	[illegible]	
	Stopped	[illegible]		
No. 3 Boiler	Started	[illegible]		[illegible]
	Stopped	7:30		[illegible]
No. 4 Boiler	Started			[illegible]
	Stopped			[illegible]

Comments on Boiler Operation

OPACITY EVALUATION - WOOD BURNING BOILERS

BOILER NO. 1			BOILER NO. 2			BOILER NO. 3			BOILER NO. 4		
Time	Duration	Note	Time	Duration	Note	Time	Duration	Note	Time	Duration	Note
1:17	30-5	6	6:46	20-5	3				1:05	10-5	6
1:30	30-5	6									
1:03	5-5	6									
1:11	3-5	6									

1. Cleaning Boil
2. Fuel Oil Adjustment
3. Load Changes
4. Meter Defect
5. Cleaning Mete Lenses
6. Wood

COMMENTS ON OPACITY & METER OPERATION

Visible Emissions Evaluation Form

Plant Name: Hercules Inc.

Address: West 7th St.

City: Hattiesburg Miss.

Emission Point: 010

Date: 3-18-85

V. E. Observer: Bobbie Danaugh

Certification Expiration: 4-25-85

Set No.	Time Start	Time End	Opacity Sum	Opacity Average
1	1:02 pm	1:08	1380	57.5
2	1:08	1:14	295	12.3
3	1:14	1:20 pm	335	14.0

Overall Average: 27.9

Is emission point operation normal ?

	Initial	Final
Distance to discharge	2 Lengths	
Direction to discharge	N	
Height of observation point	Ground	
Height of discharge	225 ft	
Plume color	Gray	
Plume background	Blue Sky	
Water vapor in plume ?		
Wind direction (from)	NW	
Wind speed	10 mph	
Ambient temperature	64°	
Discharge temperature		
Sky conditions	Clear	

Diagram Of Observation/Discharge Point:

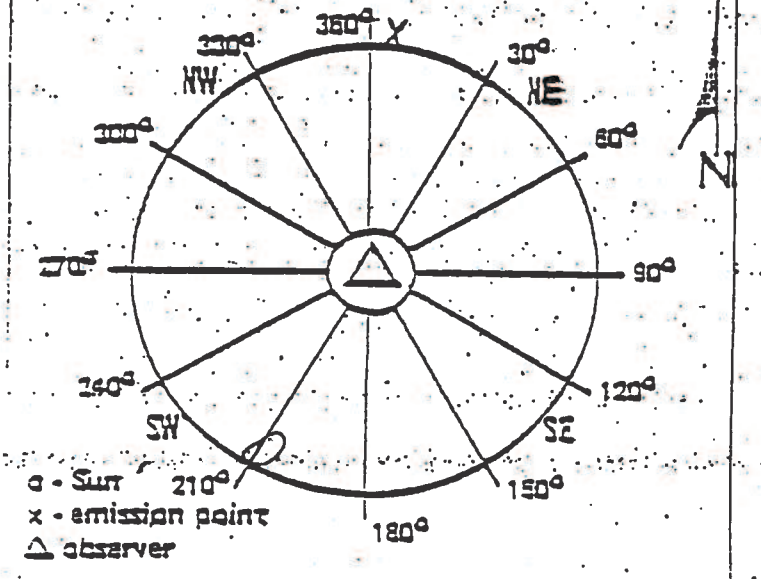

Seconds

Min.	0	15	30	45
0	100	100	100	100
1	100	100	75	90
2	100	100	100	100
3	100	15	10	10
4	10	10	10	10
5	10	10	10	10
6	5	5	10	10
7	10	5	5	10
8	10	10	10	10
9	10	10	15	20
10	20	20	20	20
11	15	15	15	15
12	20	20	15	15
13	15	15	15	15
14	15	15	15	15
15	15	15	15	15
16	15	10	10	10
17	10	10	10	10

Remarks:

Received By:

DATE

BOILER ROOM ENVIRONMENTAL LOG SHEET

Cleaned Fires		7 - 3 Shift	3 - 11 Shift	11 - 7 Shift
No. 1 Boiler	Started	9:10	6 35	1:30
	Stopped	11:[illegible]	9 2 0	3:25
No. 2 Boiler	Started	12:[illegible]	[illegible]	3:45
	Stopped	2:[illegible]	1 0 1 0	5:[illegible]
No. 3 Boiler	Started	4:55	3 3 0	11:20
	Stopped	[illegible]	5 0 0	12:45
No. 4 Boiler	Started		X	
	Stopped			

Comments on Boiler Operation

OPACITY EVALUATION - WOOD BURNING BOILERS

BOILER NO. 1			BOILER NO. 2			BOILER NO. 3			BOILER NO. 4		
Time	Duration	Note	Time	Duration	Note	Time	Duration	Note	Time	Duration	Note
[illegible]	1-m	2	7:3[illegible]	1-m	2						
2 5 0	10-5	2	8:40	30-5	6						
			252	5-5	2						
			4:00	5-5	1						
			4:05	5-5	1						
			4:07	20-5	1						

1. Cleaning Boile
2. Fuel Oil Adjustment
3. Load Changes
4. Meter Defect
5. Cleaning Meter Lenses
6. Wood

COMMENTS ON OPACITY & METER OPERATION

Visible Emissions Evaluation Reco

ant Name: Hercules Inc.

ddress: West 7th St.

ty: H'burg Miss.

nission Point: 010

te: 3-15-85

emission point operation normal ? _____

	Initial	Final
stance to discharge	2 Lengths	
rection to discharge	N	
eight of observation point	Ground	
eight of discharge	225 ft	
ume color	Gray	
ume background	Blue Sky	
ater vapor in plume ?		
nd direction (from)	E	
nd speed	15 mph	
mbient temperature	60°	
scharge temperature		
y conditions	PC	

V. E. Observer: Bobbie Draughn

Certification Expiration: 4-25-85

Set No.	Time Start	Time End	Opacity Sum	Opacity Average
1	9:35 Am	9:41	900	37.5
2	9:41	9:47	615	25.6
3	9:47	9:53 Am	205	8.5

Overall Average: 23.9

Min.	Seconds 0	15	30	45
0	15	15	20	20
1	20	30	40	40
2	60	60	50	50
3	40	40	40	40
4	35	35	35	35
5	35	50	55	40
0	40	50	50	40
1	50	60	50	45
2	40	30	20	15
3	15	15	10	10
4	10	15	10	15
5	10	5	5	5
0	5	5	10	10
1	15	10	10	10
2	15	15	10	10
3	10	5	10	10
4	10	5	5	5
5	5	5	5	5

Diagram Of Observation/Discharge Point

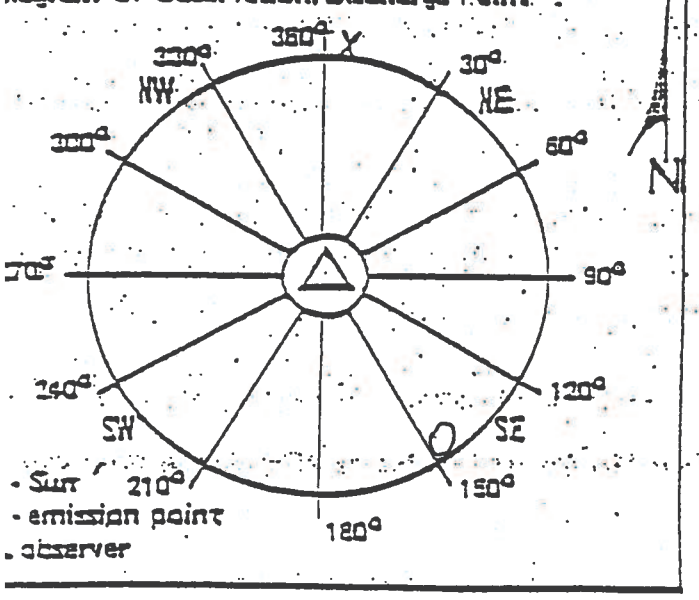

Remarks: _____

Received By: _____

Visible Emissions Evaluation Reco:

Plant Name: Hercules Inc.

Address: West 7th St.

City: H'burg Miss.

Emission Point: 010

Date: 3-11-85

Is emission point operation normal ? _____

	Initial	Final
Distance to discharge	2 Lengths	
Direction to discharge	N	
Height of observation point	Ground	
Height of discharge	225 ft	
Plume color	Gray	
Plume background	Gray	Sky
Water vapor in plume ?	--	
Wind direction (from)	SW	
Wind speed	10-15 mph	
Ambient temperature	78°	
Discharge temperature		
Sky conditions	PC	

V. E. Observer: Bobbie Draughn

Certification Expiration: 4-25-85

Set No.	Time Start	Time End	Opacity Sum	Opacity Average
1	10^{45} Am	10^{51}	795	33.1
2	10^{51}	10^{57}	1070	44.6
3	10^{57}	11^{03} Am	1185	49.4

Overall Average: 42.4

Min.	Seconds 0	15	30	45
0	25	25	30	30
1	30	30	40	40
2	30	30	35	35
3	35	35	40	40
4	50	40	40	30
5	30	30	25	20
0	20	20	20	30
1	35	35	50	50
2	45	45	50	55
3	45	45	40	50
4	65	65	50	50
5	60	60	45	40
0	50	40	30	30
1	40	55	50	50
2	40	40	45	50
3	40	50	50	50
4	70	70	60	60
5	60	50	50	55

Remarks:

Diagram Of Observation/Discharge Point

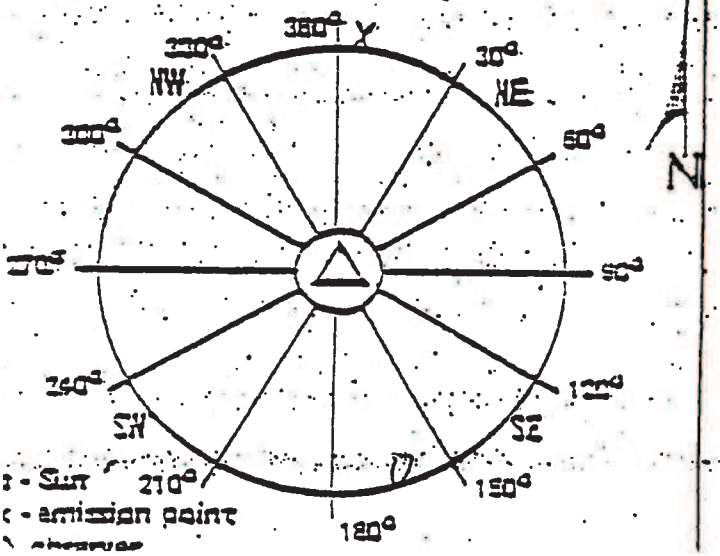

- Sun
- emission point
- observer

DATE 11

BOILER ROOM ENVIRONMENTAL LOG SHEET

Cleaned Fires		7 - 3 Shift	3 - 11 Shift	11 - 7 Shift
	Started			
o. 1 Boiler	Stopped			
	Started			
o. 2 Boiler	Stopped			
	Started	7:30		
o. 3 Boiler	Stopped	9:35		
	Started	1:??		
o. 4 Boiler	Stopped	1:10		

omments on Boiler Operation

OPACITY EVALUATION - WOOD BURNING BOILERS

BOILER NO. 1			BOILER NO. 2			BOILER NO. 3			BOILER NO. 4			
ime	Duration	Note	Time	Duration	Note	Time	Duration	Note	Time	Duration	Note	1.Cleaning Bo
		7										2.Fuel Oil Adjustment
	5-5	7										3.Load Change
		2										4.Meter Defec
												5.Cleaning Me Lenses
												6. Wood

OMMENTS ON OPACITY & METER OPERATION

Visible Emissions Evaluation Reco

int Name: Hercules Inc.

dress: West 7th St.

y: Hattiesburg Miss.

ission Point: 009

te: 3-12-85

mission point operation normal ?

	Initial	Final
tance to discharge	2 Lengths	
ection to discharge	N	
ight of observation point	Ground	
ight of discharge	200 ft.	
me color	Gray	
me background	Gray	Sky
er vapor in plume?		
nd direction (from)	S	
nd speed	5 mph	
bient temperature	68°	
charge temperature		
y conditions	Cloudy	

V. E. Observer: Bobbie Draughon

Certification Expiration: 4-25-85

Set No.	Time		Opacity	
	Start	End	Sum	Average
1	11⁵⁰ Am	11⁵⁶	765	31.9
2	11⁵⁶	12⁰²	1030	42.9
3	12⁰²	12⁰⁸ Pm	960	40.0

Overall Average: 38.3

Min.	Seconds 0	15	30	45
0	20	20	20	35
1	30	30	30	30
2	30	30	30	30
3	30	40	40	35
4	30	35	35	35
5	35	35	40	40
0	40	100	80	50
1	30	30	35	35
2	35	35	35	45
3	45	40	35	40
4	30	35	40	45
5	40	50	40	40
0	40	40	40	40
1	40	50	50	40
2	40	55	50	45
3	40	40	35	30
4	35	40	35	35
5	35	35	35	35

Remarks:

iagram Of Observation/Discharge Point

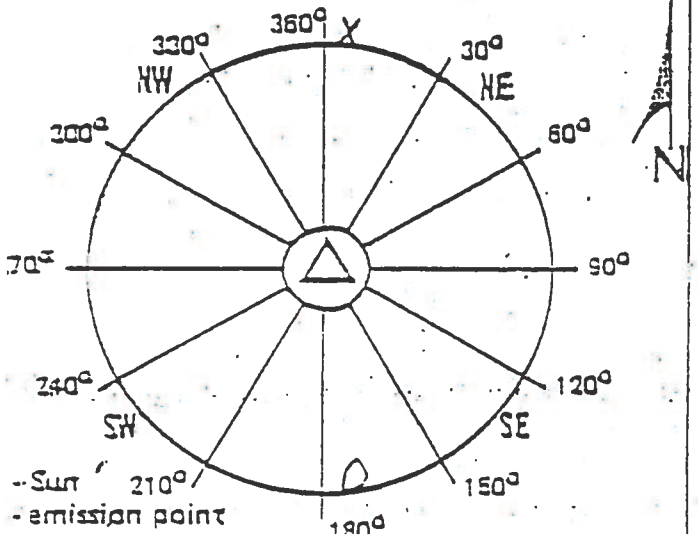

Visible Emissions Evaluation Reco:

Plant Name: Hercules Inc.

Address: West 7th St.

City: H'burg Miss.

Emission Point: 010

Date: 3-7-85

s emission point operation normal ? _____

	Initial	Final
Distance to discharge	2 Lengths	
Direction to discharge	N	
Height of observation point	Ground	
Height of discharge	225 ft	
Plume color	Gray	
Plume background	Blue Sky	
Water vapor in plume ?	--	
Wind direction (from)	E	
Wind speed	10 mph	
Ambient temperature	68°	
Discharge temperature		
Sky conditions	Clear	

Diagram Of Observation/Discharge Point

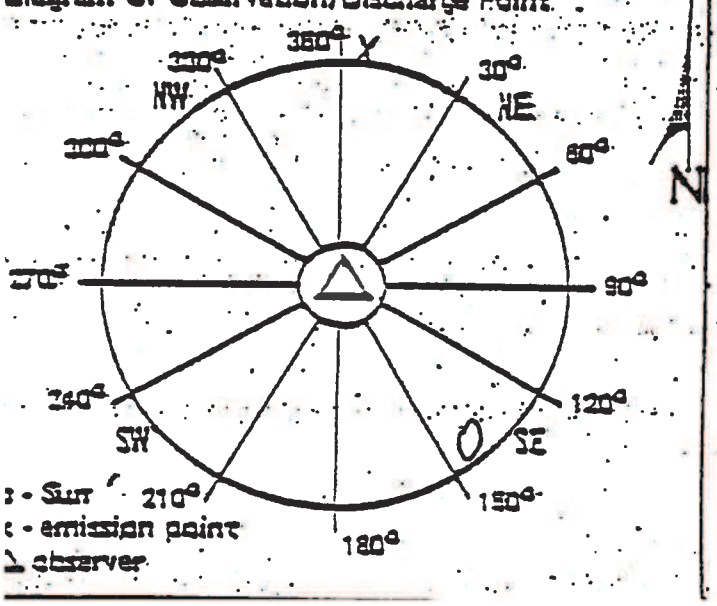

- Sun
- emission point
- observer

V. E. Observer: Bobbie Draughn

Certification Expiration: 4-25-85

Set No.	Time Start	Time End	Opacity Sum	Opacity Average
1	10^{07}	10^{13}	1100	45.8
2	10^{13}	10^{19}	1070	44.6
3	10^{19}	10^{25}	650	27.1

Overall Average: 39.2

Min.	Seconds 0	15	30	45
0	35	35	35	35
1	35	35	30	30
2	40	35	35	40
3	40	40	50	45
4	60	80	70	60
5	55	60	60	60
0	60	65	70	70
1	60	45	50	60
2	50	35	40	40
3	50	50	50	40
4	35	35	30	30
5	25	25	25	30
0	25	25	25	20
1	20	25	25	25
2	25	25	25	30
3	25	25	25	35
4	35	35	35	30
5	30	30	25	25

Remarks: _____

Received By: _____

DATE 3-2-95

BOILER ROOM ENVIRONMENTAL LOG SHEET

Cleaned Fires		7 - 3 Shift	3 - 11 Shift	11 - 7 Shift
No. 1 Boiler	Started	10:00	5:10	
	Stopped	11:00	6:00	
No. 2 Boiler	Started	11:45	6:15	
	Stopped	2:00	7:10	
No. 3 Boiler	Started	7:20	3:08	
	Stopped	2:30	3:45	
No. 4 Boiler	Started	1:00	4:00	
	Stopped	3:00	5:50	

Comments on Boiler Operation

OPACITY EVALUATION - WOOD BURNING BOILERS

BOILER NO. 1			BOILER NO. 2			BOILER NO. 3			BOILER NO. 4		
Time	Duration	Note	Time	Duration	Note	Time	Duration	Note	Time	Duration	Note
			4:15								

1. Cleaning Boi
2. Fuel Oil Adjustment
3. Load Changes
4. Meter Defect
5. Cleaning Met Lenses
6. Wood

COMMENTS ON OPACITY & METER OPERATION

Visible Emissions Evaluation Reco

int Name: Hercules Inc.

dress: West 7th St.

y: Hattiesburg Miss.

ission Point: 009

te: 3-5-85

mission point operation normal ? _____

V. E. Observer: Bobbie Draughon

Certification Expiration: 4-25-85

Set No.	Time		Opacity	
	Start	End	Sum	Average
1	10^25 Am	10^31	795	33.1
2	10^31	10^37	1060	44.2
3	10^37	10^43 Am	1070	44.6

Overall Average: 40.6

	Initial	Final
tance to discharge	2 Lengths	
ection to discharge	N	
ight of observation point	Ground	
ight of discharge	200 ft.	
me color	Gray	
me background	Gray Sky	
ter vapor in plume?		
nd direction (from)	SE	
nd speed	10-15 mph	
bient temperature	61°	
charge temperature		
/ conditions	Cloudy	

Min.	Seconds 0	15	30	45
0	40	40	40	40
1	40	35	35	40
2	40	40	40	40
3	40	35	20	20
4	20	15	15	10
5	30	35	35	50
0	60	60	55	50
1	50	50	45	50
2	45	50	45	40
3	40	50	50	50
4	40	40	40	30
5	30	30	30	30
0	45	50	50	50
1	45	45	50	50
2	45	40	45	50
3	40	45	40	40
4	40	40	40	40
5	40	40	50	50

iagram Of Observation/Discharge Point

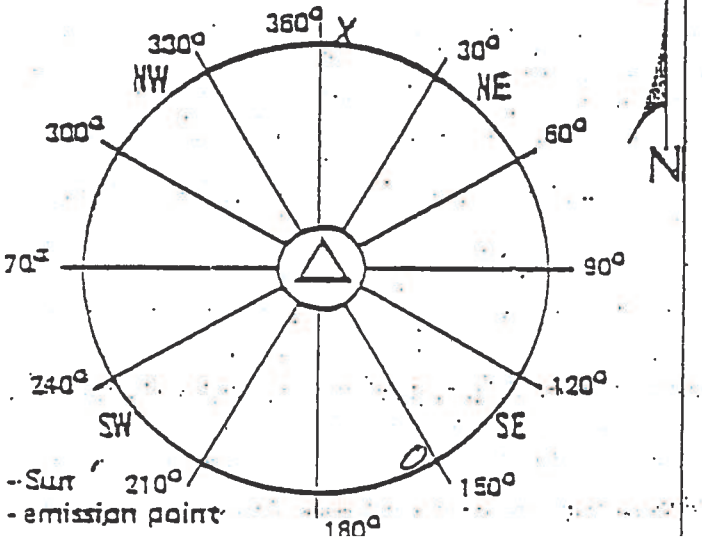

Remarks: _____

DATE 3-5-75

BOILER ROOM ENVIRONMENTAL LOG SHEET

Cleaned Fires		7 - 3 Shift	3 - 11 Shift	11 - 7 Shift
No. 1 Boiler	Started	7:30	3:00	12:55
	Stopped	9:00	5:45	1:40
No. 2 Boiler	Started	9:00	6:45	2:35
	Stopped	10:06	7:40	3:30
No. 3 Boiler	Started	11:45	9:50	10:50
	Stopped	12:20		11:20
No. 4 Boiler	Started			11:55
	Stopped			12:55

Comments on Boiler Operation

OPACITY EVALUATION - WOOD BURNING BOILERS

BOILER NO. 1			BOILER NO. 2			BOILER NO. 3			BOILER NO. 4		
Time	Duration	Note	Time	Duration	Note	Time	Duration	Note	Time	Duration	Note
7:30	30-S	3	9:00	10-S	6						
7:30	10-S	6									

1. Cleaning Boi
2. Fuel Oil Adjustment
3. Load Changes
4. Meter Defect
5. Cleaning Met Lenses
6. Wood

COMMENTS ON OPACITY & METER OPERATION

Visible Emissions Evaluation Reco

Plant Name: Hercules Inc.

Address: West 7th St.

City: Hattiesburg Miss.

Emission Point: 009

Date: 3-4-85

Emission point operation normal ? _____

V. E. Observer: Bobbie Draughn

Certification Expiration: 4-25-85

Set No.	Time		Opacity	
	Start	End	Sum	Average
1	10^{05}	10^{11}	720	30.0
2	10^{11}	10^{17}	805	33.5
3	10^{17}	10^{23}	520	21.7

Overall Average: 28.4

	Initial	Final
Distance to discharge	2 Lengths	
Direction to discharge	N	
Height of observation point	Ground	
Height of discharge	200 ft.	
Plume color	Gray	
Plume background	Gray Sky	
Water vapor in plume?		
Wind direction (from)	S	
Wind speed	15 mph	
Ambient temperature	76°	
Discharge temperature		
Sky conditions	PC	

Diagram Of Observation/Discharge Point

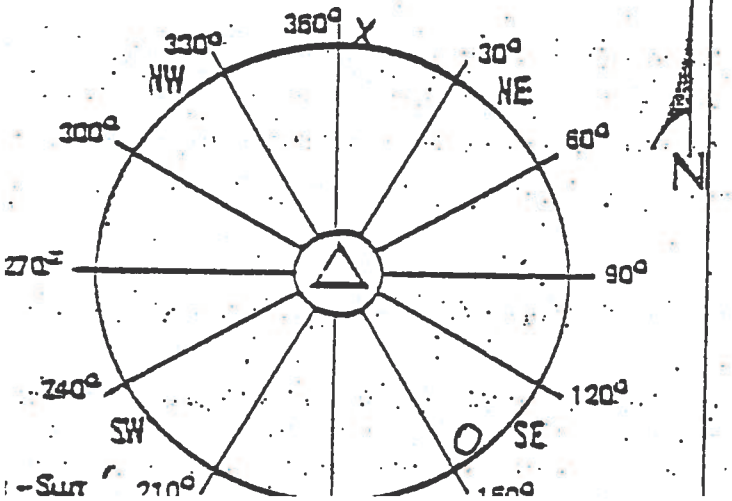

Min.	Seconds 0	15	30	45
0	15	15	15	15
1	15	15	25	25
2	20	20	35	35
3	30	30	30	40
4	40	40	40	40
5	40	40	50	50
6	45	45	40	40
7	40	30	30	30
8	40	40	35	30
9	30	30	30	30
10	30	30	30	30
11	30	30	30	30
12	25	25	20	20
13	25	25	25	20
14	25	25	25	25
15	25	25	25	25
16	10	5	10	15
17	25	25	25	20

Remarks: _____

Visible Emissions Evaluation Reco.

lant Name: Hercules Inc.

ddress: West 7th St.

ity: Hattiesburg Miss.

mission Point: 009

ate: 3-1-85

V. E. Observer: Bobbie Draughn

Certification Expiration: 4-25-85

Set No.	Time		Opacity	
	Start	End	Sum	Average
1	9 31 Am	9 37	760	31.7
2	9 37	9 43	655	27.3
3	9 43	9 49	855	35.6

Overall Average: 31.5

emission point operation normal ? _____

	Initial	Final
istance to discharge	2 Engine	
irection to discharge	N	
eight of observation point	Ground	
eight of discharge	200 ft.	
ume color	Gray	
ume background	Gray Sky	
ater vapor in plume-?		
ind direction (from)	SE	
ind speed	10 mph	
mbient temperature	53°	
scharge temperature		
y conditions	Cloudy	

Seconds

Min.	0	15	30	45
0	15	15	25	35
1	50	40	40	30
2	30	20	30	30
3	30	30	30	30
4	40	40	35	35
5	35	35	35	25
0	25	30	50	40
1	30	30	25	25
2	15	15	10	10
3	15	25	55	45
4	25	25	20	20
5	25	25	40	30
0	25	25	30	20
1	30	30	30	30
2	30	70	50	40
3	30	30	30	30
4	30	25	25	70
5	90	30	30	25

Diagram Of Observation/Discharge Point

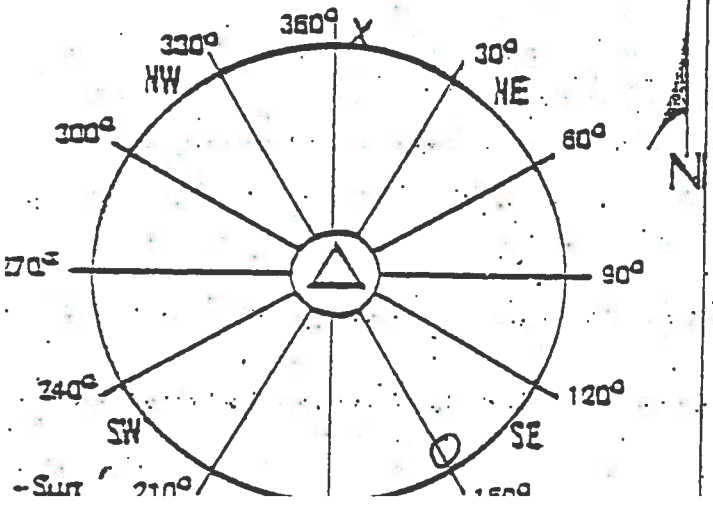

Remarks: _____

Hercules Incorporated
West 7th Street
P.O. Box 1937
Hattiesburg, MS 39401
(601) 545-3450

April 1, 1985

Mr. Dwight K. Wylie, P.E. Chief
Air Division
Bureau of Pollution Control
P. O. Box 10385
Jackson, Mississippi 39209

Dear Mr. Wylie:

In reference to operating permit No. 0800-0001, please find the attached monthly report detailing the compliance status of the boilers for emission points 009 and 010.

We will continue to submit this report on a monthly basis.

Very truly yours,

Charles Jordan

Charles Jordan
Environmental Coordinator

CSJ:bs
0286Y

Attachments

Visible Emissions Evaluation Reco:

ant Name: Hercules Inc.

ldress: West 7th St.

y: H'burg Miss.

nission Point: 010

te: 2-28-85

emission point operation normal ?

	Initial	Final
stance to discharge	2 Lengths	
rection to discharge	N	
ight of observation point	Ground	
ight of discharge	225 ft	
me color	Gray	
me background	Blue Sky	
ter vapor in plume ?		
nd direction (from)	E	
nd speed	5 mph	
bient temperature	59°	
charge temperature		
y conditions	PC	

iagram Of Observation/Discharge Point

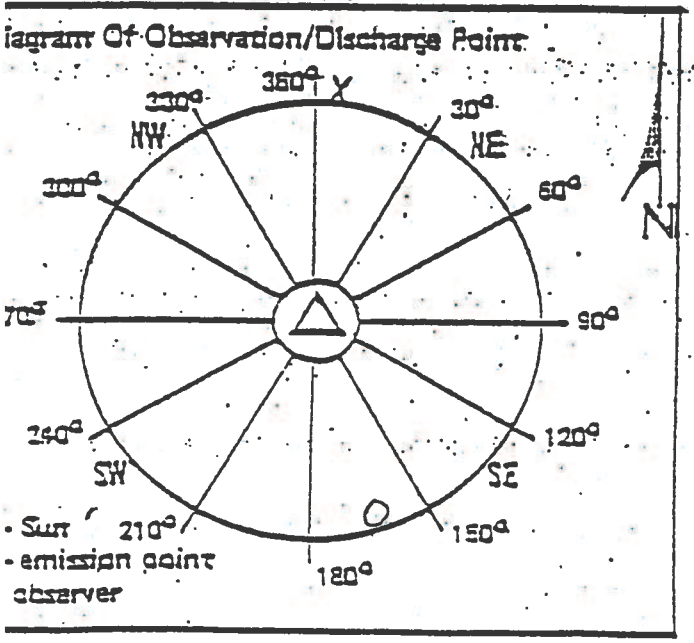

V. E. Observer: Bobbie Draughn

Certification Expiration: 4-25-85

Set No.	Time Start	Time End	Opacity Sum	Opacity Average
1	10^{40} Am	10^{46}	1230	51.3
2	10^{46}	10^{52}	645	26.9
3	10^{52}	10^{58} Am	600	25.0

Overall Average: 34.4

Min.	Seconds 0	15	30	45
0	40	40	40	50
1	70	70	80	70
2	50	45	50	55
3	50	70	60	70
4	60	50	40	40
5	35	35	30	30
0	25	25	25	25
1	30	30	30	30
2	20	20	20	30
3	35	35	30	25
4	30	30	25	25
5	25	25	25	25
0	25	25	25	25
1	25	25	20	20
2	15	15	25	25
3	25	25	25	25
4	30	30	30	30
5	30	30	25	25

Remarks:

Received By:

Visible Emissions Evaluation Reco

Plant Name: Hercules Inc.

Address: West 7th St.

City: Hattiesburg Miss.

Emission Point: 010

Date: 2-27-85

Is emission point operation normal ?

V. E. Observer: Robbie Donaldson

Certification Expiration: 4-25-85

Set No.	Time Start	Time End	Opacity Sum	Opacity Average
1	10^{35} Am	10^{41}	1860	77.5
2	10^{41}	10^{47}	1710	71.3
3	10^{47}	10^{53} Am	540	22.5

Overall Average: 57.1

	Initial	Final
Distance to discharge	2 Lengths	
Direction to discharge	N	
Height of observation point	Ground	
Height of discharge	225 ft	
Plume color	Gray	
Plume background	Gray Sky	
Water vapor in plume ?	--	
Wind direction (from)	NE	
Wind speed	5 mph	
Ambient temperature	59°	
Discharge temperature		
Sky conditions	Cloudy	

Min.	Seconds 0	15	30	45
0	60	60	70	70
1	70	80	80	80
2	90	80	80	80
3	75	75	75	80
4	75	80	80	80
5	90	80	90	80
6	80	70	70	70
7	75	75	80	80
8	80	80	80	80
9	80	75	75	75
10	75	70	60	60
11	60	60	50	50
12	40	40	50	50
13	50	40	20	20
14	15	15	15	10
15	10	5	5	5
16	10	30	25	25
17	15	15	15	15

Diagram Of Observation/Discharge Point:

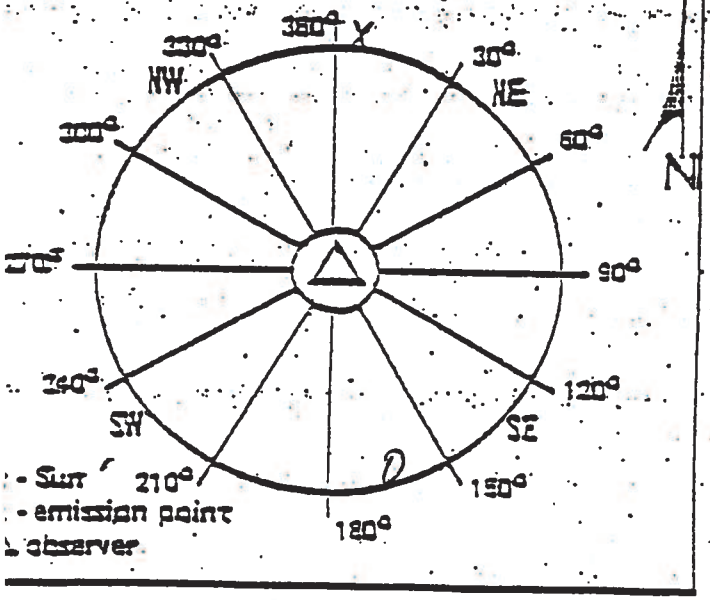

Remarks:

Received By:

Visible Emissions Evaluation Reco:

lant Name: Hercules Inc.

ddress: West 7th St.

ity: Hattiesburg Miss.

mission Point: 009

ate: 2-27-85

emission point operation normal ? _____

V. E. Observer: Bobbie Daughdrill

Certification Expiration: 4-25-85

Set No.	Time		Opacity	
	Start	End	Sum	Average
1	10^{35} Am	10^{41}	135	5.6
2	10^{41}	10^{47}	245	10.2
3	10^{47}	10^{53}	960	40.0

Overall Average: 18.6

	Initial	Final
Distance to discharge	2 Lengths	
Direction to discharge	N	
Height of observation point	Ground	
Height of discharge	200 ft.	
Plume color	Gray	
Plume background	Gray Sky	
Water vapor in plume?		
Wind direction (from)	NE	
Wind speed	5 mph	
Ambient temperature	59°	
Discharge temperature		
Sky conditions	Cloudy	

Min.	Seconds 0	15	30	45
0	10	10	10	5
1	5	5	5	5
2	5	5	5	5
3	5	5	5	5
4	5	5	5	5
5	5	5	5	5
6	5	5	5	5
7	5	5	5	5
8	5	5	5	5
9	5	5	5	5
10	5	5	25	50
11	25	10	10	35
12	60	50	40	40
13	40	40	30	30
14	40	40	30	30
15	20	20	20	30
16	30	50	60	60
17	40	40	60	60

Diagram Of Observation/Discharge Point:

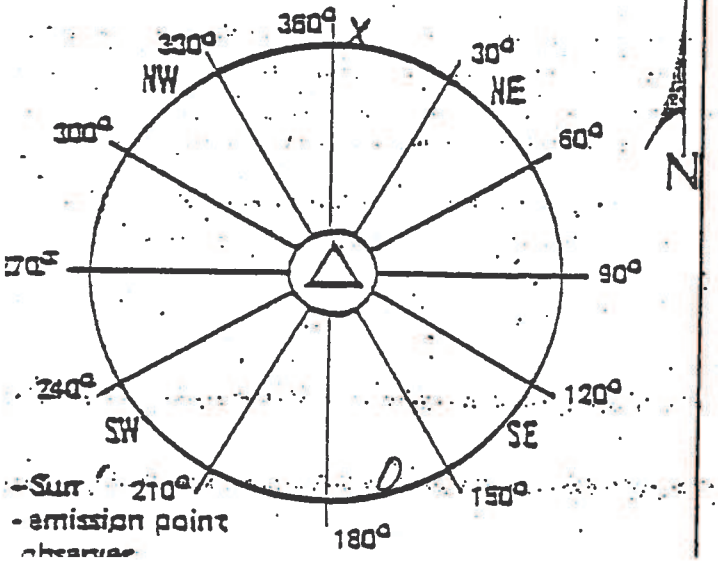

Remarks: _____

Visible Emissions Evaluation Reco

lant Name: Hercules Inc.

ddress: West 7th St.

ity: H'burg Miss.

mission Point: 009

ate: 2-26-85

emission point operation normal ?

	Initial	Final
istance to discharge	2 Lengths	
irection to discharge	N	
eight of observation point	Ground	
eight of discharge	200 ft.	
ume color	Gray	
ume background	Gray Sky	
ater vapor in plume ?		
ind direction (from)	N	
ind speed	5 mph	
mbient temperature	67°	
scharge temperature		
y conditions	Cloudy	

Diagram Of Observation/Discharge Point

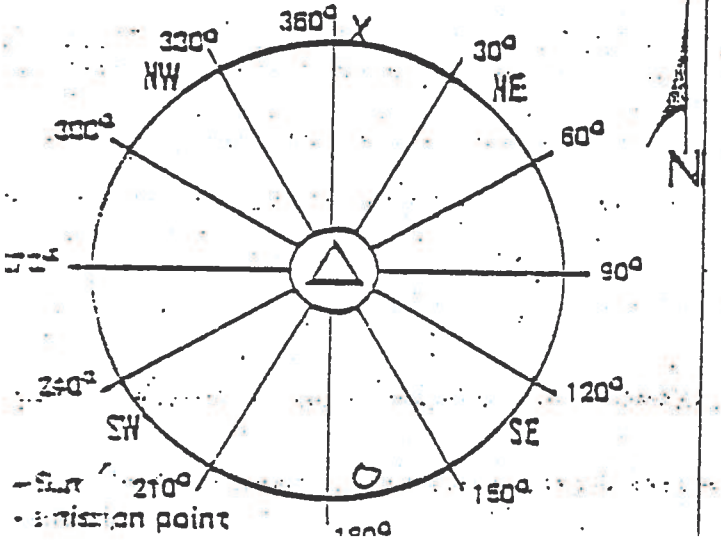

V. E. Observer: Bobbie Draughn

Certification Expiration: 4-25-85

Set No.	Time Start	Time End	Opacity Sum	Opacity Average
1	11 05 Am	11 11	900	37.5
2	11 11	11 17	1235	51.5
3	11 17	11 23 Am	1395	58.1

Overall Average: 49.0

Min.	Seconds 0	15	30	45
0	30	30	30	30
1	40	25	25	30
2	25	25	35	35
3	40	40	40	40
4	55	60	60	65
5	40	40	35	25
0	70	40	40	50
1	40	50	50	40
2	45	55	60	50
3	70	55	60	50
4	80	60	50	40
5	40	40	50	50
0	50	75	75	95
1	100	90	100	90
2	90	75	55	40
3	30	30	30	30
4	30	40	40	40
5	40	50	50	50

Remarks:

DATE 3-26-85

BOILER ROOM ENVIRONMENTAL LOG SHEET

CTeaned Fires		7 - 3 Shift	3 - 11 Shift	11 - 7 Shift
No. 1 Boiler	Started	8:30	530	12:55
	Stopped	9:10	650	1:40
No. 2 Boiler	Started	—	—	
	Stopped	—	—	
No. 3 Boiler	Started	1030	730	2:35
	Stopped	1115	900	3:55
No. 4 Boiler	Started	7:00	310	11:00
	Stopped	7:40	345	12:35

Comments on Boiler Operation

OPACITY EVALUATION - WOOD BURNING BOILERS

BOILER NO. 1			BOILER NO. 2			BOILER NO. 3			BOILER NO. 4		
Time	Duration	Note	Time	Duration	Note	Time	Duration	Note	Time	Duration	Note

1. Cleaning Boile
2. Fuel Oil Adjustment
3. Load Changes
4. Meter Defect
5. Cleaning Meter Lenses
6. Wood

COMMENTS ON OPACITY & METER OPERATION

Visible Emissions Evaluation Reco

Plant Name: Hercules, Inc.

Address: West 7th St.

City: Hattiesburg Miss.

Emission Point: 010

Date: 2-20-85

Is emission point operation normal ?

	Initial	Final
Distance to discharge	1 Engle	
Direction to discharge	N	
Height of observation point	Ground	
Height of discharge	225 ft	
Plume color	Gray	
Plume background	Blue Sky	
Water vapor in plume ?		
Wind direction (from)	NE	
Wind speed	5-10 mph	
Ambient temperature	54°	
Discharge temperature		
Sky conditions	Clear	

Diagram Of Observation/Discharge Point

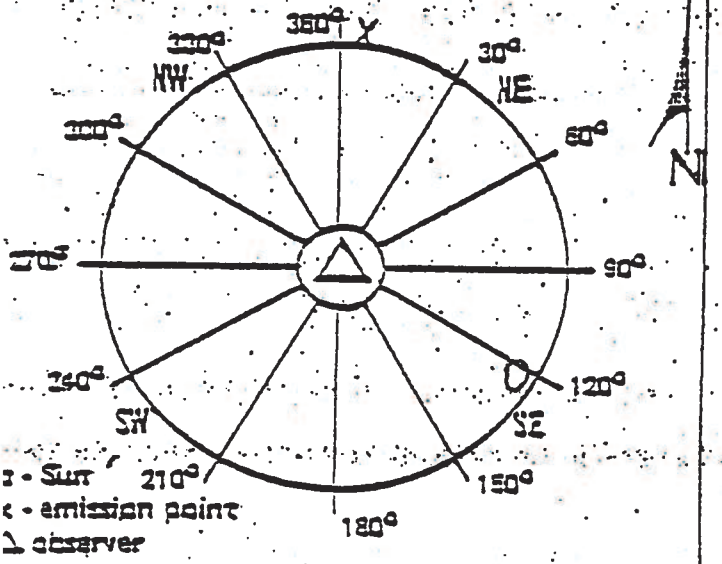

V. E. Observer: Robbie Dunaghin

Certification Expiration: 4-25-85

Set No.	Time Start	Time End	Opacity Sum	Opacity Average
1	8:24 Am	8:30	1195	49.8
2	8:30	8:36	870	36.3
3	8:36	8:42 Am	1065	44.4

Overall Average: 43.5

Min.	Seconds 0	15	30	45
0	30	50	70	80
1	70	60	30	40
2	30	25	40	80
3	80	80	80	60
4	50	40	30	20
5	25	25	50	50
6	60	60	50	40
7	30	35	35	35
8	30	35	35	30
9	25	35	35	35
10	30	30	30	30
11	35	40	40	30
12	35	35	35	50
13	30	30	30	30
14	25	25	25	30
15	40	60	60	50
16	40	50	60	70
17	50	65	70	70

Remarks:

Received By:

Visible Emissions Evaluation Reco

Plant Name: Hercules Inc.

Address: West 7th St.

City: Hattiesburg Miss.

Emission Point: 009

Date: 2-15-85

Is emission point operation normal ? _____

V. E. Observer: Bobbie Dunaghan

Certification Expiration: 4-25-85

Set No.	Time		Opacity	
	Start	End	Sum	Average
1	9 56 Am	10 02	655	27.3
2	10 02	10 08	275	11.5
3	10 08	10 14 Am	420	17.5

Overall Average: 18.8

	Initial	Final
Distance to discharge	2 Lengths	
Direction to discharge	N	
Height of observation point	Ground	
Height of discharge	200 ft.	
Plume color	Gray	
Plume background	Gray Sky	
Water vapor in plume?		
Wind direction (from)	SE	
Wind speed	10 mph	
Ambient temperature	44°	
Discharge temperature		
Sky conditions	PC	

Min.	Seconds 0	15	30	45
0	15	15	20	20
1	20	40	30	20
2	20	20	60	80
3	80	30	25	20
4	15	15	20	20
5	15	15	20	20
6	20	20	20	20
7	15	15	10	10
8	10	10	10	10
9	10	10	10	10
10	5	5	10	5
11	10	10	10	10
12	10	10	15	15
13	15	15	15	15
14	20	20	20	20
15	20	20	20	20
16	20	15	15	20
17	20	20	20	20

Diagram Of Observation/Discharge Point

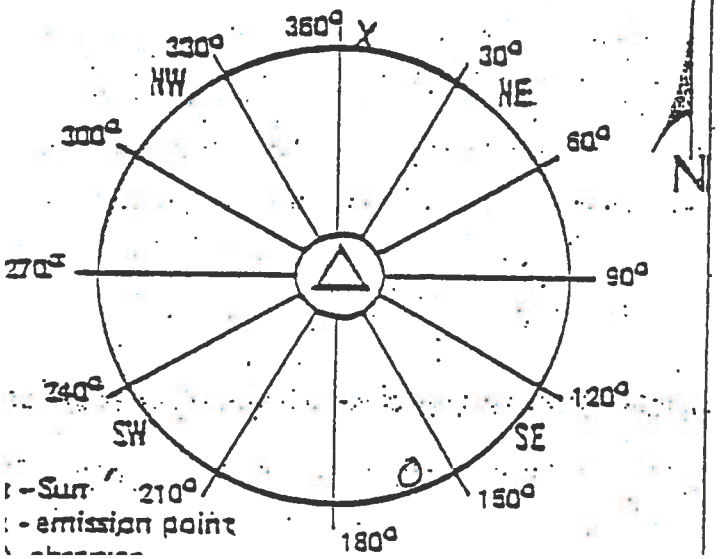

X - Sun
O - emission point

Remarks: _____

Visible Emissions Evaluation Reco

lant Name: Hercules Inc.

ddress: West 7th St.

ity: Hattiesburg Miss.

mission Point: 009

ate: 2-13-85

emission point operation normal ? _____

V. E. Observer: Bobbie Donaghon

Certification Expiration: 4-25-85

Set No.	Time		Opacity	
	Start	End	Sum	Average
1	11⁵⁵ Am	12⁰⁰ Pm	395	16.5
2	12⁰⁰	12⁰⁷	610	25.4
3	12⁰⁷	12¹³ Pm	595	24.8

Overall Average: 22.2

	Initial	Final
istance to discharge	2 Lengths	
irection to discharge	N	
eight of observation point	Ground	
eight of discharge	200 ft.	
ume color	Gray	
ume background	Blue Sky	
ater vapor in plume?		
ind direction (from)	W	
ind speed	10 mph	
mbient temperature	53°	
scharge temperature		
y conditions	Clear	

Min.	Seconds 0	15	30	45
0	10	10	10	10
1	15	20	20	20
2	15	15	15	15
3	20	20	20	20
4	15	15	15	15
5	15	25	20	20
6	40	50	25	20
7	20	20	20	15
8	25	30	40	25
9	20	20	20	20
10	20	20	20	40
11	30	30	20	20
12	25	20	25	25
13	25	40	35	30
14	20	25	20	20
15	20	20	20	35
16	40	25	20	20
17	20	20	20	25

Diagram Of Observation/Discharge Point

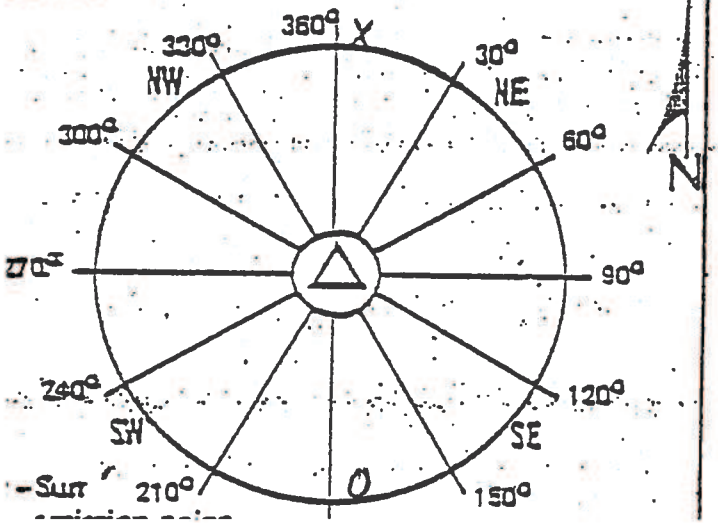

Remarks: _____

Visible Emissions Evaluation Record

Plant Name: Hercules Inc.

Address: West 7th St.

City: Hattiesburg Miss.

Emission Point: 009

Date: 2-8-85

Is emission point operation normal ? _____

V. E. Observer: Bobbie Draughon

Certification Expiration: 4-25-85

Set No.	Time Start	Time End	Opacity Sum	Opacity Average
1	12^{29} PM	12^{35}	975	36.5
2	12^{35}	12^{41}	735	30.6
3	12^{41}	12^{47} PM	895	37.3

Overall Average: 34.8

	Initial	Final
Distance to discharge	2 Lengths	
Direction to discharge	N	
Height of observation point	Ground	
Height of discharge	200 ft.	
Plume color	Gray	
Plume background	Blue Sky	
Water vapor in plume?		
Wind direction (from)	E	
Wind speed	15 mph	
Ambient temperature	46°	
Discharge temperature		
Sky conditions	Clear	

Diagram Of Observation/Discharge Point

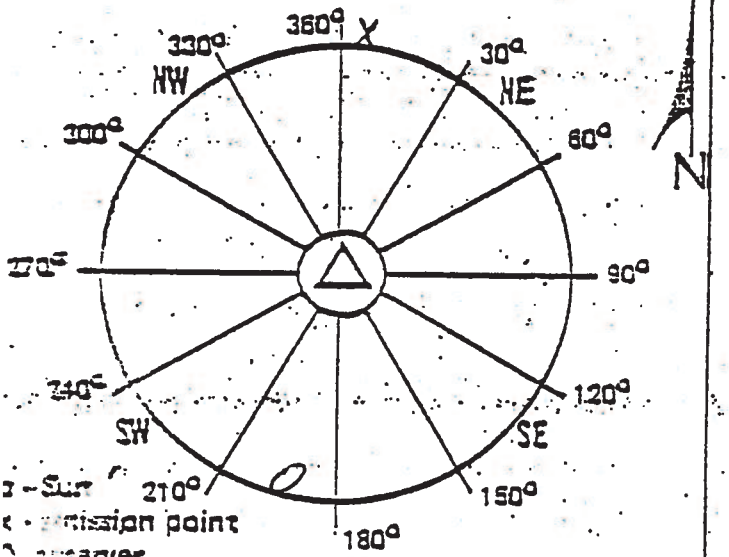

Min.	Seconds 0	15	30	45
0	30	30	30	30
1	90	80	70	50
2	30	20	20	30
3	60	50	25	20
4	25	25	25	25
5	25	25	30	30
6	30	40	40	40
7	35	25	30	40
8	40	50	50	40
9	35	30	25	25
10	20	20	20	20
11	20	20	20	20
12	20	20	35	35
13	20	35	35	35
14	40	40	30	30
15	35	35	30	35
16	35	45	40	35
17	30	70	65	65

Remarks: _____

Visible Emissions Evaluation Record

Plant Name: Hercules Inc.

Address: West 7th St.

City: Hattiesburg Miss.

Emission Point: 009

Date: 2-6-85

Is emission point operation normal ? _____

V. E. Observer: Bobbie Draughn

Certification Expiration: 4-25-85

Set No.	Time		Opacity	
	Start	End	Sum	Average
1	1 35 PM	1 41	835	34.8
2	1 41	1 47	1065	44.4
3	1 47	1 53 PM	1065	44.4

Overall Average: 41.2

	Initial	Final
Distance to discharge	2 Lengths	
Direction to discharge	N	
Height of observation point	Ground	
Height of discharge	200 ft.	
Plume color	Gray	
Plume background	Gray Sky	
Water vapor in plume ?		
Wind direction (from)	NW	
Wind speed	10 mph	
Ambient temperature	43°	
Discharge temperature		
Sky conditions	Cloudy	

Seconds

Min.	0	15	30	45
0	30	30	30	30
1	30	30	35	30
2	35	35	35	35
3	40	40	35	35
4	35	35	35	35
5	40	40	40	40
6	40	40	40	40
7	45	50	50	40
8	40	40	40	40
9	45	40	40	45
10	40	40	40	55
11	55	60	50	50
12	50	50	45	45
13	45	50	50	45
14	45	40	40	40
15	40	40	45	50
16	45	45	45	40
17	40	40	40	50

Diagram Of Observation/Discharge Point

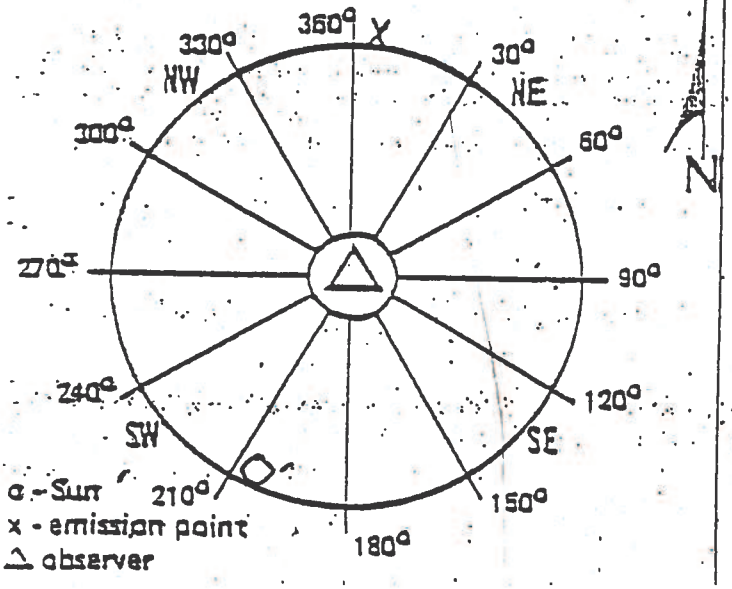

Remarks: _____

DATE _____

BOILER ROOM ENVIRONMENTAL LOG SHEET

Cleaned Fires		7 - 3 Shift	3 - 11 Shift	11 - 7 Shift
No. 1 Boiler	Started	7:00	3:30	11:00
	Stopped	7:40	4:30	11:45
No. 2 Boiler	Started	8:00	5:15	12:30
	Stopped	8:45	6:25	
No. 3 Boiler	Started	10:30		1:00
	Stopped	11:45		
No. 4 Boiler	Started	12:10		✓
	Stopped	12:50		✓

Comments on Boiler Operation

OPACITY EVALUATION - WOOD BURNING BOILERS

BOILER NO. 1			BOILER NO. 2			BOILER NO. 3			BOILER NO. 4			
Time	Duration	Note	Time	Duration	Note	Time	Duration	Note	Time	Duration	Note	
115	15-S	1	8:09 AM	45-S	1							1. Cleaning Boi
			8:14 AM	5-S	1							2. Fuel Oil Adjustment
			10:35 AM	10-S	3							3. Load Changes
			10:52 AM	10-S	2							4. Meter Defect
									-			5. Cleaning Meter Lenses
												6. Wood

COMMENTS ON OPACITY & METER OPERATION _____

HERCULES

Hercules Incorporated
West 7th Street
P.O. Box 1937
Hattiesburg, MS 39401
(601) 545-3450

RECEIVED
FEB 20 1985
DEPT. OF NATURAL RESOURCE
BUREAU OF POLLUTION CONTROL

February 19, 1985

Mr. Dwight K. Wylie, P.E. Chief
Air Division
Bureau of Pollution Control
P. O. Box 10385
Jackson, Mississippi 39209

Dear Mr. Wylie:

In reference to operating permit no. 0800-0001, please find the attached monthly report detailing the compliance status of the boilers for emission points 009 and 010.

We will continue to submit this report on a monthly basis.

Very truly yours,

Charles S. Jordan

Charles S. Jordan
Environmental Coordinator

CSJ:ml
0256Y-3

Attachments

2/15/85

To: D.E. Jordan

From: R.A. Van Sant

Operating Permit No. 00020-00021 Hattiesburg, MS
Issued For The Operation of Air Emissions Equipment

In reference to the above permit, Part III, Other Requirements, 1-D, the following monthly report is for January, 1985.

The report details the compliance status of the boilers with copies of all visible emissions evaluations in which any reading exceeds 40% opacity.

Total number of VEE copies attached = 15.

In addition, copies of log sheets are attached for all visible emission evaluations when opacity exceeds 40% for two minutes or more.

Number of log sheets attached = 5.

R. A. Van Sant

Visible Emissions Evaluation Reco:

Plant Name: Hercules Inc.

Address: West 7th St.

City: Hollywood Miss.

Emission Point: 010

Date: 1-31-85

Is emission point operation normal ? _____

V. E. Observer: Bobbie Daughdrill

Certification Expiration: 4-25-85

Set No.	Time Start	Time End	Opacity Sum	Opacity Average
1	12:10 PM	12:16	1465	61.0
2	12:16	12:22	1110	46.3
3	12:22	12:28 PM	550	22.9

Overall Average: 43.4

	Initial	Final
Distance to discharge	2 Lengths	
Direction to discharge	N	
Height of observation point	Ground	
Height of discharge	225 ft	
Plume color	Gray	
Plume background	Gray Sky	
Water vapor in plume ?		
Wind direction (from)	S	
Wind speed	5-10mph	
Ambient temperature	75°	
Discharge temperature		
Sky conditions	Cloudy	

Min:	Seconds 0	15	30	45
0	30	40	60	70
1	60	50	50	50
2	70	70	50	60
3	60	60	75	90
4	90	90	80	50
5	60	50	50	50
0	50	50	60	60
1	50	50	50	50
2	40	40	40	40
3	50	50	50	55
4	50	45	45	40
5	40	35	40	30
0	30	30	30	35
1	30	30	35	35
2	30	25	25	25
3	25	25	20	20
4	20	20	15	10
5	10	10	10	5

Diagram Of Observation/Discharge Point:

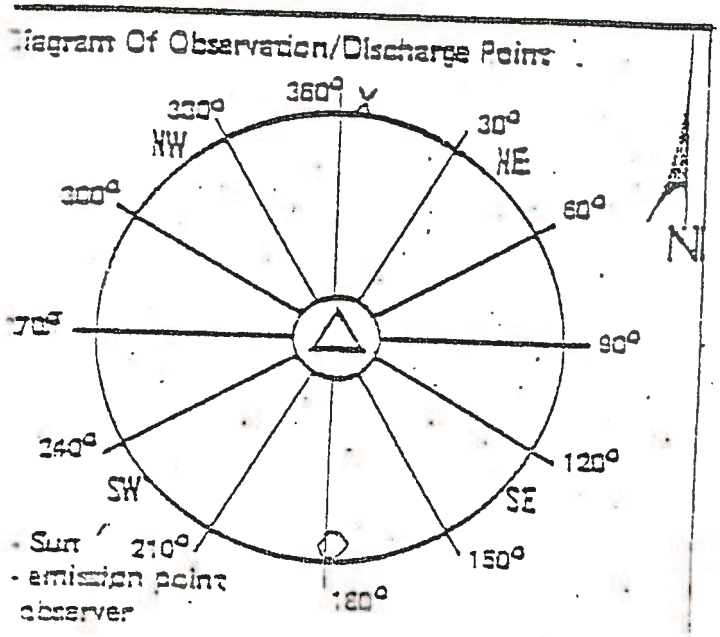

Remarks: _____

DATE 1-31-[illegible]

BOILER ROOM ENVIRONMENTAL LOG SHEET

Cleaned Fires		7 - 3 Shift	3 - 11 Shift	11 - 7 Shift
No. 1 Boiler	Started	820	[illegible]	[illegible]
	Stopped	9 00	5:50	[illegible]
No. 2 Boiler	Started	155	6 30	[illegible]
	Stopped	1045	7:10	[illegible]
No. 3 Boiler	Started	1140	7:45	[illegible]
	Stopped	1230	8:35	[illegible] 45
No. 4 Boiler	Started	710	3:30	10:35
	Stopped	745	4:15	[illegible]

Comments on Boiler Operation

OPACITY EVALUATION - WOOD BURNING BOILERS

BOILER NO. 1			BOILER NO. 2			BOILER NO. 3			BOILER NO. 4			
Time	Duration	Note	Time	Duration	Note	Time	Duration	Note	Time	Duration	Note	1.Cleaning Boile
[illegible]	[illegible]	1	[illegible]	2 [illegible]	1							2.Fuel Oil Adjustment
[illegible]	[illegible]	2	[illegible]	3 [illegible]								3.Load Changes
[illegible]	30 [illegible]	1										4.Meter Defect
[illegible]												5.Cleaning Meter Lenses
												6. Wood

COMMENTS ON OPACITY & METER OPERATION

Visible Emissions Evaluation Reco:

Plant Name: Hercules Inc.

Address: West 7th St.

City: H'burg Miss.

Emission Point: 010

Date: 1-30-85

s emission point operation normal ?

	Initial	Final
Distance to discharge	2 Lengths	
Direction to discharge	N	
Height of observation point	Ground	
Height of discharge	225 ft	
Plume color	Gray	
Plume background	Gray Sky	
Water vapor in plume ?		
Wind direction (from)	SE	
Wind speed	5 mph	
Ambient temperature	58°	
Discharge temperature		
Sky conditions	Cloudy	

Diagram Of Observation/Discharge Point

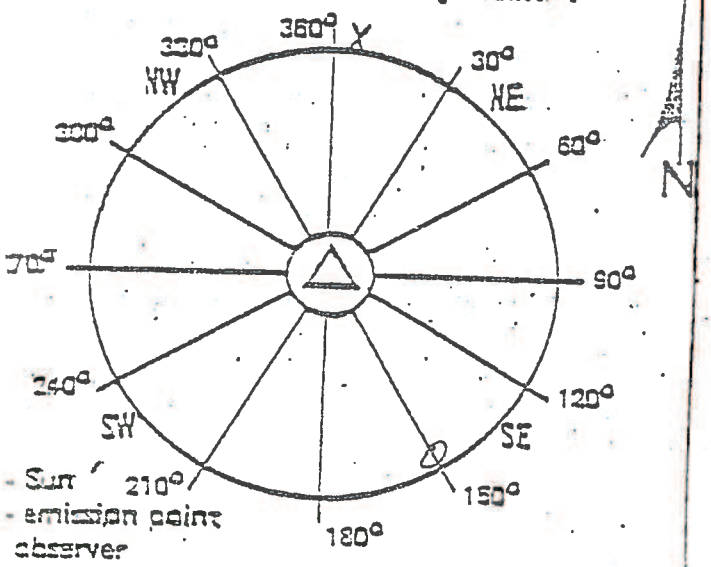

V. E. Observer: Bobbie Draughn

Certification Expiration: 4-25-85

Set No.	Time Start	Time End	Opacity Sum	Opacity Average
1	10^{25} Am	10^{31}	2190	91.3
2	10^{31}	10^{37}	760	31.7
3	10^{37}	10^{43} Am	355	14.8

Overall Average: 45.9

Min.	Seconds 0	15	30	45
0	80	80	80	80
1	80	80	90	100
2	100	100	90	90
3	80	80	100	90
4	100	90	100	100
5	100	100	100	100
0	100	100	70	50
1	40	30	30	30
2	25	25	20	20
3	20	20	25	25
4	20	20	15	15
5	15	15	15	15
0	15	15	15	10
1	15	15	10	10
2	10	15	15	15
3	20	20	20	20
4	20	15	15	15
5	10	10	15	15

Remarks:

DATE

BOILER ROOM ENVIRONMENTAL LOG SHEET

Cleaned Fires		7 - 3 Shift	3 - 11 Shift	11 - 7 Shift
No. 1 Boiler	Started		525	
	Stopped		620	
No. 2 Boiler	Started	10:30		
	Stopped		720	
No. 3 Boiler	Started		740	
	Stopped		840	
No. 4 Boiler	Started	7:20	340	
	Stopped		435	

Comments on Boiler Operation

OPACITY EVALUATION - WOOD BURNING BOILERS

BOILER NO. 1			BOILER NO. 2			BOILER NO. 3			BOILER NO. 4		
Time	Duration	Note	Time	Duration	Note	Time	Duration	Note	Time	Duration	Note
		1									
		1									
		3									
		1									

1. Cleaning Boile
2. Fuel Oil Adjustment
3. Load Changes
4. Meter Defect
5. Cleaning Meter Lenses
6. Wood

COMMENTS ON OPACITY & METER OPERATION

Visible Emissions Evaluation Reco

Plant Name: Hercules Inc.

Address: West 7th St.

City: Hattiesburg Miss.

Emission Point: 010

Date: 1-21-85

Is emission point operation normal ? _____

V. E. Observer: Bobbie Draughn

Certification Expiration: 4-25-85

Set No.	Time Start	Time End	Opacity Sum	Opacity Average
1	100 pm	106	1410	58.8
2	106	112	740	30.8
3	112	118 pm	1050	43.8

Overall Average: 44.5

	Initial	Final
Distance to discharge	2 Lengths	
Direction to discharge	N	
Height of observation point	Ground	
Height of discharge	225 ft	
Plume color	Gray	
Plume background	Blue Sky	
Water vapor in plume ?		
Wind direction (from)	NW	
Wind speed	10-15 mph	
Ambient temperature	24°	
Discharge temperature		
Sky conditions	Clear	

Diagram Of Observation/Discharge Point

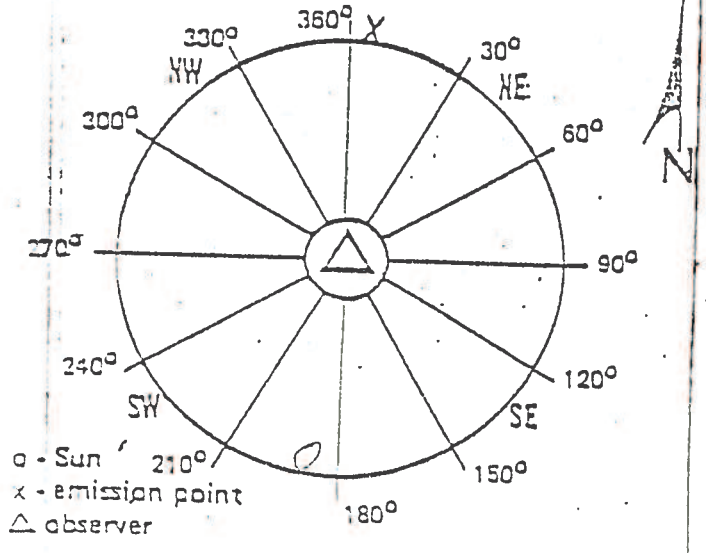

Min.	Seconds 0	15	30	45
0	100	100	90	90
1	100	100	100	100
2	70	30	30	20
3	30	30	30	30
4	30	70	60	60
5	40	40	40	20
0	20	20	15	15
1	25	25	30	30
2	30	30	30	30
3	30	30	30	30
4	40	40	40	40
5	40	40	40	40
0	40	40	50	50
1	70	50	50	60
2	50	50	70	50
3	50	50	40	30
4	30	30	30	30
5	20	30	30	50

Remarks: _____

Received By: _____

DATE 1-21-85

BOILER ROOM ENVIRONMENTAL LOG SHEET

Cleaned Fires		7 - 3 Shift	3 - 11 Shift	11 - 7 Shift
No. 1 Boiler	Started	6:00	7:40	11:05
	Stopped	8:45	2:40	1:20
No. 2 Boiler	Started	—	—	12:45
	Stopped	—	—	1:45
No. 3 Boiler	Started	9:25	5:15	3:15
	Stopped	11:15	7:40	3:10
No. 4 Boiler	Started	12:30	4:00	3:40
	Stopped	1:45	10:00	4:45

Comments on Boiler Operation

OPACITY EVALUATION - WOOD BURNING BOILERS

BOILER NO. 1			BOILER NO. 2			BOILER NO. 3			BOILER NO. 4			
Time	Duration	Note	Time	Duration	Note	Time	Duration	Note	Time	Duration	Note	1.Cleaning Boile
												2.Fuel Oil Adjustment
												3.Load Changes
												4.Meter Defect
												5.Cleaning Meter Lenses
												6. Wood

OMMENTS ON OPACITY & METER OPERATION

Visible Emissions Evaluation Recor[illegible] Howard Dunnell

Plant Name: Hercules Inc.

V. E. Observer: Eddie Dunigan

Address: West 7th St.

Certification Expirati[illegible]: 4-25-85

City: Hollandale Miss.

Emission Point: 009

Date: 7-15-85

Is emission point operation normal ?

	Initial	Final
Distance to discharge	2 Lengths	
Direction to discharge	N	
Height of observation point	Ground	
Height of discharge	200 ft.	
Plume color	GRAY	
Plume background	BLUE	
Water vapor in plume ?		
Wind direction (from)	WEST	
Wind speed	5 MPH	
Ambient temperature		
Discharge temperature	148°F	
Sky conditions	Clear	

Set No.	Time Start	Time End	Opacity Sum	Opacity Average
1	1:30 Pm	1:36 Pm	615	25.6
2	1:36 Pm	1:42 Pm	720	30.0
3	1:42 Pm	1:48 Pm	1130	47.1

Overall Average: 34.2

Min.	Seconds 0	15	30	45
0	25	25	25	30
1	25	30	30	25
2	25	25	25	25
3	25	25	25	25
4	25	25	25	25
5	25	25	25	25
Y 0	25	25	25	30
1	30	25	25	30
2	35	35	35	35
3	35	35	30	30
4	25	25	30	30
5	30	25	35	35
Y 0	35	40	40	45
1	45	50	50	50
2	50	50	50	50
3	50	55	55	50
4	50	45	45	45
5	45	45	45	45

Diagram Of Observation/Discharge Point

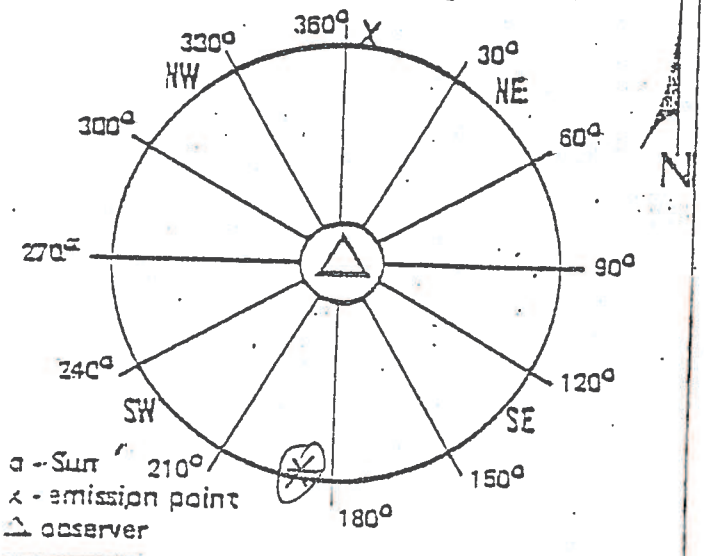

Remarks:

Received By:

DATE 1-15-85

BOILER ROOM ENVIRONMENTAL LOG SHEET

Cleaned Fires		7 - 3 Shift	3 - 11 Shift	11 - 7 Shift
No. 1 Boiler	Started			
	Stopped			
No. 2 Boiler	Started			
	Stopped			
No. 3 Boiler	Started			
	Stopped			
No. 4 Boiler	Started			
	Stopped			

Comments on Boiler Operation

OPACITY EVALUATION - WOOD BURNING BOILERS

BOILER NO. 1			BOILER NO. 2			BOILER NO. 3			BOILER NO. 4		
Time	Duration	Note	Time	Duration	Note	Time	Duration	Note	Time	Duration	Note

1. Cleaning Boile
2. Fuel Oil Adjustment
3. Load Changes
4. Meter Defect
5. Cleaning Meter Lenses
6. Wood

COMMENTS ON OPACITY & METER OPERATION

Visible Emissions Evaluation Reco

Plant Name: Hercules Inc.

Address: West 7th St.

City: Hattiesburg Miss.

Emission Point: 010

Date: 1-11-85

Is emission point operation normal ?

V. E. Observer: Bobbie Daughtry

Certification Expiration: 4-25-85

Set No.	Time Start	Time End	Opacity Sum	Opacity Average
1	12[35] pm	12[41]	515	21.5
2	12[41]	12[47]	850	35.4
3	12[47]	12[53] pm	645	26.9

Overall Average: 27.9

	Initial	Final
Distance to discharge	2 Lengths	
Direction to discharge	N	
Height of observation point	Ground	
Height of discharge	225 ft	
Plume color	Gray	
Plume background	Gray Sky	
Water vapor in plume ?		
Wind direction (from)	NW	
Wind speed	10 mph	
Ambient temperature	46°	
Discharge temperature		
Sky conditions	PC	

Min.	Seconds 0	15	30	45
0	20	20	20	20
1	20	20	20	20
2	15	15	15	15
3	15	15	20	20
4	25	25	30	30
5	25	25	30	35
0	25	35	40	40
1	50	45	40	35
2	35	35	30	30
3	30	40	30	30
4	30	30	30	30
5	35	35	40	50
0	40	40	35	45
1	45	45	40	35
2	30	30	20	20
3	20	20	20	20
4	15	15	15	15
5	20	20	20	20

Diagram Of Observation/Discharge Point

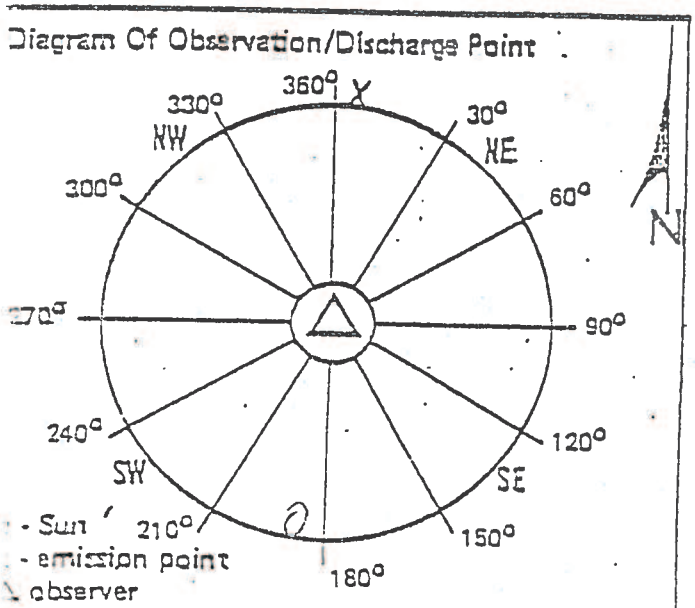

Remarks:

Received By:

DATE 1-11-85

BOILER ROOM ENVIRONMENTAL LOG SHEET

Cleaned Fires		7 - 3 Shift	3 - 11 Shift	11 - 7 Shift
No. 1 Boiler	Started			
	Stopped			
No. 2 Boiler	Started			
	Stopped			
No. 3 Boiler	Started			
	Stopped			
No. 4 Boiler	Started			
	Stopped			

Comments on Boiler Operation

OPACITY EVALUATION - WOOD BURNING BOILERS

BOILER NO. 1			BOILER NO. 2			BOILER NO. 3			BOILER NO. 4			
Time	Duration	Note	Time	Duration	Note	Time	Duration	Note	Time	Duration	Note	1.Cleaning Boile
				1-1	1							2.Fuel Oil Adjustment
												3.Load Changes
												4.Meter Defect
												5.Cleaning Meter Lenses

COMMENTS ON OPACITY & METER OPERATION

Visible Emissions Evaluation Reco.

Plant Name: Hercules Inc.

Address: West 7th St.

City: Hattiesburg Miss.

Emission Point: 010

Date: 1-10-85

Is emission point operation normal? _____

V. E. Observer: Bobbie Donaghue

Certification Expiration: 4-25-85

Set No.	Time Start	Time End	Opacity Sum	Opacity Average
1	10:30 Am	10:36	1805	75.2
2	10:36	10:42	1820	75.8
3	10:42	10:48 Am	1790	74.6

Overall Average: 75.2

	Initial	Final
Distance to discharge	2 Lengths	
Direction to discharge	N	
Height of observation point	Ground	
Height of discharge	225 ft	
Plume color	Gray	
Plume background	Blue Sky	
Water vapor in plume?		
Wind direction (from)	S	
Wind speed	10 mph	
Ambient temperature	66°	
Discharge temperature		
Sky conditions	PC	

Min.	Seconds 0	15	30	45
0	70	70	70	70
1	90	90	90	80
2	75	75	80	80
3	75	70	70	70
4	70	70	70	70
5	70	70	80	80
0	80	80	70	70
1	80	80	80	80
2	80	100	90	80
3	80	70	70	70
4	70	70	80	80
5	60	60	70	70
0	60	70	70	70
1	80	80	80	70
2	80	80	80	80
3	70	70	70	80
4	100	100	100	80
5	60	50	50	60

Diagram Of Observation/Discharge Point:

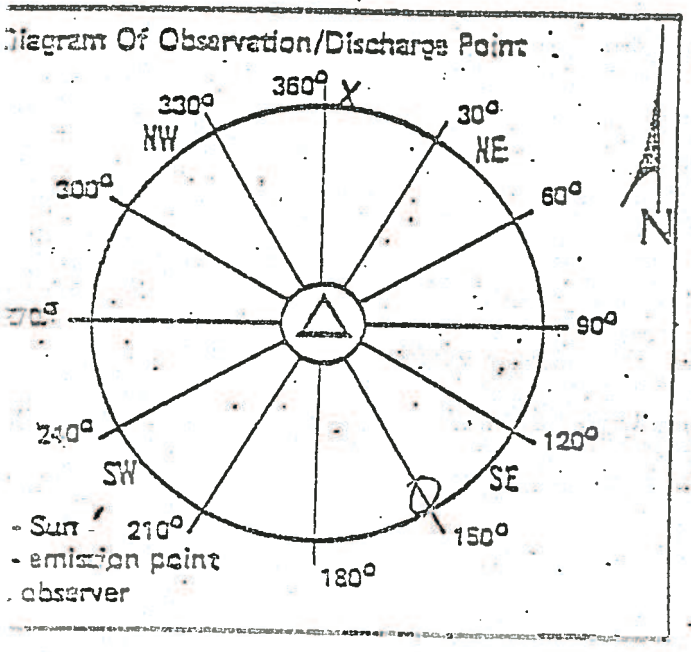

Remarks: _____

Received By: _____

DATE

BOILER ROOM ENVIRONMENTAL LOG SHEET

Cleaned Fires		- 3 Shift	3 - 11 Shift	11 - 7 Shift
No. 1 Boiler	Started			
	Stopped			
No. 2 Boiler	Started			
	Stopped			
No. 3 Boiler	Started			
	Stopped			
No. 4 Boiler	Started			
	Stopped			

Comments on Boiler Operation

OPACITY EVALUATION - WOOD BURNING BOILERS

BOILER NO. 1			BOILER NO. 2			BOILER NO. 3			BOILER NO. 4			
Time	Duration	Note	Time	Duration	Note	Time	Duration	Note	Time	Duration	Note	1.Cleaning Bo
												2.Fuel Oil Adjustment
												3.Load Change
												4.Meter Defec
												5.Cleaning Me Lenses
												6. Wood

COMMENTS ON OPACITY & METER OPERATION

Visible Emissions Evaluation Record

Plant Name: Hercules Inc.

Address: West 7th St.

City: Hollandale Miss.

Emission Point: 009

Date: 1-31-85

V. E. Observer: Bobbie Donaghey

Certification Expiration: 4-25-85

Was emission point operation normal ?

	Initial	Final
Distance to discharge	2 Lengths	
Direction to discharge	N	
Height of observation point	Ground	
Height of discharge	200 ft.	
Plume color	Gray	
Plume background	Gray Sky	
Water vapor in plume-?		
Wind direction (from)	S	
Wind speed	5-10 mph	
Ambient temperature	75°	
Discharge temperature		
Sky conditions	Cloudy	

Set No.	Time Start	Time End	Opacity Sum	Opacity Average
1	12^10 pm	12^16	725	30.2
2	12^16	12^22	445	18.5
3	12^22	12^28 pm	690	28.8

Overall Average: 25.8

Min.	Seconds 0	15	30	45
0	20	15	15	15
1	15	15	40	40
2	40	30	25	20
3	20	35	40	40
4	60	50	40	30
5	35	35	30	20
6	25	20	20	25
7	20	20	15	15
8	35	35	30	30
9	20	15	15	15
10	15	10	10	10
11	10	10	5	20
12	40	45	40	25
13	25	25	30	30
14	25	20	15	20
15	30	30	30	25
16	30	30	25	25
17	30	30	30	35

Diagram Of Observation/Discharge Point:

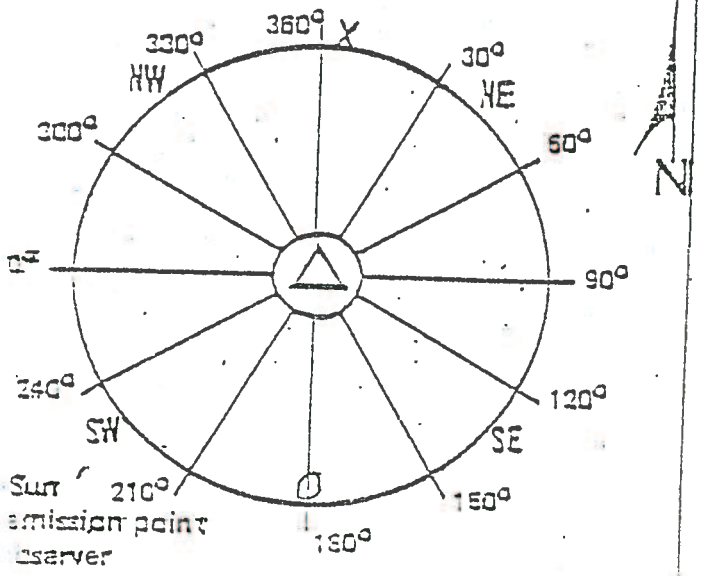

Remarks:

Visible Emissions Evaluation Reco

Plant Name: Hercules Inc.

Address: West 7th St.

City: H'burg Miss.

Emission Point: 010

Date: 1-29-85

Is emission point operation normal? _____

	Initial	Final
Distance to discharge	2 Lengths	
Direction to discharge	N	
Height of observation point	Ground	
Height of discharge	225 ft²	
Plume color	Gray	
Plume background	Blue Sky	
Water vapor in plume?		
Wind direction (from)	SE	
Wind speed	5 mph	
Ambient temperature	54°	
Discharge temperature		
Dry conditions	PC	

Diagram Of Observation/Discharge Point

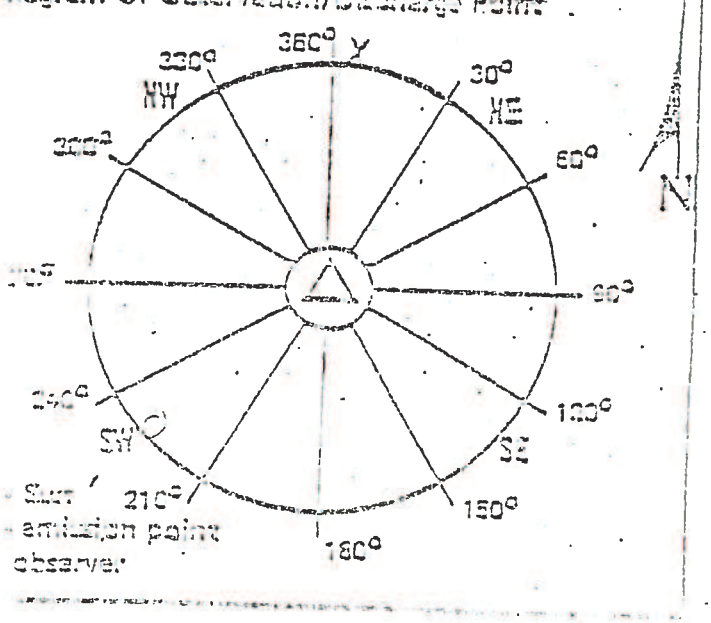

V. E. Observer: Robbie Draughn

Certification Expiration: 4-25-85

Set No.	Time Start	Time End	Opacity Sum	Opacity Average
1	1:50 pm	1:56	665	27.7
2	1:56	2:02	835	34.8
3	2:02	2:08 pm	760	31.7

Overall Average: 31.4

Min.	Seconds 0	15	30	45
0	25	25	25	25
1	25	25	25	25
2	25	30	30	25
3	30	30	35	35
4	35	35	30	30
5	30	30	20	15
0	15	20	30	30
1	30	30	25	25
2	30	30	30	30
3	40	40	40	40
4	40	60	60	40
5	35	35	40	40
0	35	35	35	35
1	50	40	40	40
2	30	30	30	30
3	30	30	25	25
4	25	25	25	25
5	30	30	30	30

Remarks: _____

Visible Emissions Evaluation Reco: 2

Plant Name: Hercules Inc.

Address: West 7th St.

City: H'burg Miss.

Emission Point: 010

Date: 1-28-85

Is emission point operation normal ? _____

	Initial	Final
Distance to discharge	2 Lengths	
Direction to discharge	N	
Height of observation point	Ground	
Height of discharge	225 ft	
Plume color	Gray	
Plume background	Gray Sky	
Water vapor in plume ?		
Wind direction (from)	NW	
Wind speed	15 MPH	
Ambient temperature	40°	
Discharge temperature		
Sky conditions	Cloudy	

Diagram Of Observation/Discharge Point

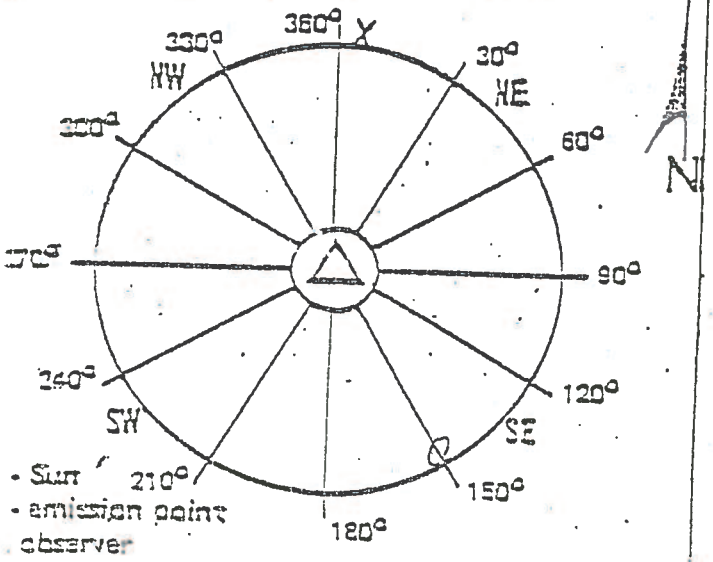

V. E. Observer: Bobbie Draughn

Certification Expiration: 4-25-85

Set No.	Time Start	Time End	Opacity Sum	Opacity Average
1	10^{20} Am	10^{26}	1290	53.8
2	10^{26}	10^{32}	1675	69.8
3	10^{32}	10^{38} Am	655	27.3

Overall Average: 50.3

Min.	Seconds 0	15	30	45
0	60	60	70	70
1	60	60	60	60
2	50	40	40	50
3	50	50	50	50
4	55	50	45	45
5	45	55	55	60
0	60	60	70	85
1	80	75	75	80
2	90	90	90	40
3	40	40	60	100
4	100	100	100	100
5	70	30	20	20
0	15	20	20	15
1	15	15	20	20
2	20	20	30	40
3	40	40	35	35
4	30	30	25	30
5	35	35	35	35

Remarks: _____

Visible Emissions Evaluation Recor

Plant Name: Hercules Inc.

Address: West 7th St.

City: Hattiesburg Miss.

Emission Point: 009

Date: 1-28-85

Is emission point operation normal ? _____

V. E. Observer: Bobbie Draughn

Certification Expiration: 4-25-85

Set No.	Time Start	Time End	Opacity Sum	Opacity Average
1	10 20 Am	10 26	795	33.1
2	10 26	10 32	585	24.4
3	10 32	10 38 Am	390	16.3

Overall Average: 24.6

	Initial	Final
Distance to discharge	2 Lengths	
Direction to discharge	N	
Height of observation point	Ground	
Height of discharge	200 ft.	
Plume color	Gray	
Plume background	Gray Sky	
Water vapor in plume-?		
Wind direction (from)	NW	
Wind speed	15 MPH	
Ambient temperature	40°	
Discharge temperature		
Sky conditions	Cloudy	

Diagram Of Observation/Discharge Point

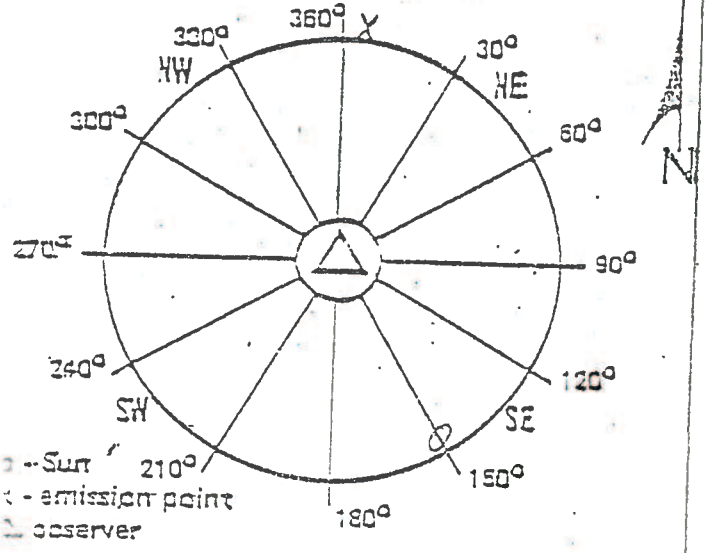

Min.	Seconds 0	15	30	45
0	25	25	25	25
1	20	20	20	20
2	20	20	25	25
3	30	50	50	50
4	50	45	45	45
5	40	40	40	40
0	35	25	20	20
1	20	20	20	20
2	20	20	20	30
3	35	35	30	25
4	20	15	15	20
5	30	30	30	30
0	25	25	20	15
1	15	15	15	15
2	15	15	15	20
3	15	15	15	15
4	15	15	15	15
5	15	15	15	15

Remarks: _____

Received By: _____

Visible Emissions Evaluation Recor

Plant Name: Hercules Inc.

Address: West 7th St.

City: Hattiesburg Miss.

Emission Point: 009

Date: 1-24-85

Is emission point operation normal ? _____

V. E. Observer: Bobbie Daughdrill

Certification Expiration: 4-25-85

Set No.	Time Start	Time End	Opacity Sum	Opacity Average
1	12 24 pm	12 30	675	28.1
2	12 30 pm	12 36	815	34.0
3	12 36	12 42 pm	885	36.9

Overall Average: 33.0

	Initial	Final
Distance to discharge	2 Lengths	
Direction to discharge	N	
Height of observation point	Ground	
Height of discharge	200 ft.	
Plume color	Gray	
Plume background	Gray Sky	
Water vapor in plume ?		
Wind direction (from)	W	
Wind speed	5-10 mph	
Ambient temperature	50	
Discharge temperature		
Sky conditions	Cloudy	

Min.	Seconds 0	15	30	45
0	25	25	25	25
1	25	25	30	30
2	30	30	30	30
3	30	30	30	30
4	25	25	25	25
5	30	30	35	30
6	30	30	40	40
7	40	40	40	35
8	30	30	35	35
9	35	35	35	35
10	30	35	35	30
11	30	30	30	30
12	30	30	40	50
13	45	50	40	40
14	35	35	35	35
15	35	35	35	35
16	35	35	40	40
17	35	35	30	30

Diagram Of Observation/Discharge Point

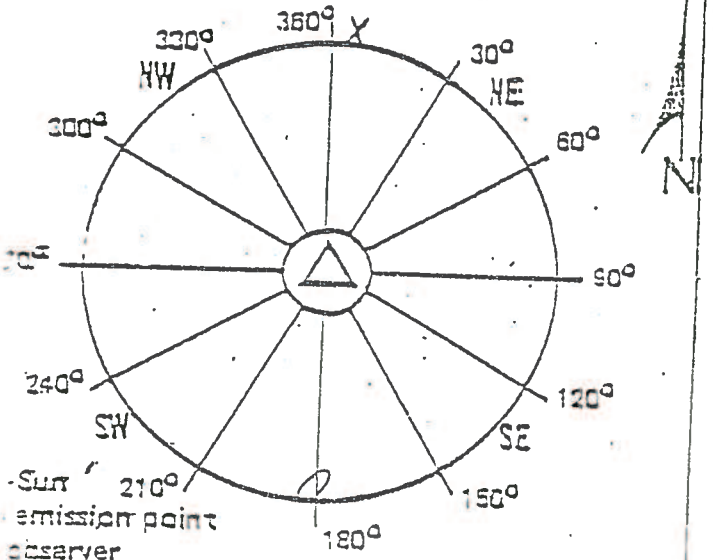

Sun

Emission point

Observer

Remarks: _____

Visible Emissions Evaluation Recor

lant Name: Hercules Inc.

ddress: West 7th St.

ity: Hattiesburg Miss.

mission Point: 009

ate: 1-11-85

emission point operation normal ? _____

	Initial	Final
istance to discharge	2 Lengths	
irection to discharge	N	
eight of observation point	Ground	
eight of discharge	200 ft.	
ume color	Gray	
ume background	Gray Sky	
ater vapor in plume ?		
nd direction (from)	NW	
nd speed	10 mph	
mbient temperature	46°	
scharge temperature		
y conditions	PC	

iagram Of Observation/Discharge Point

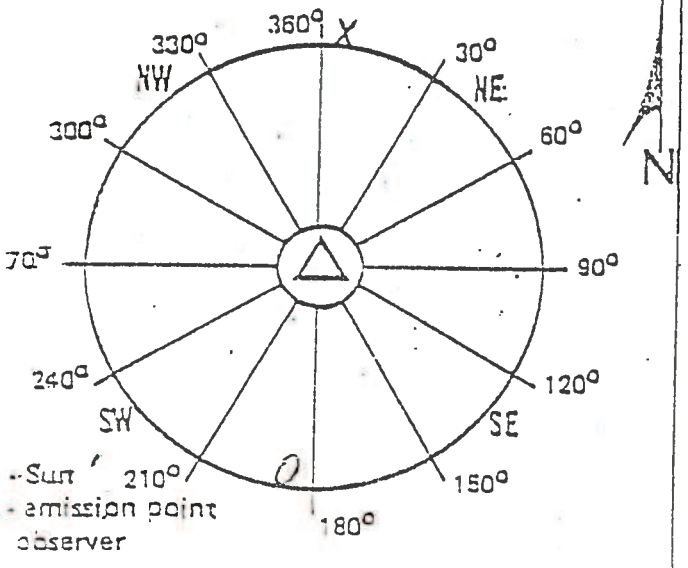

V. E. Observer: Bobbie Draughn

Certification Expiration: 4-25-85

Set No.	Time Start	Time End	Opacity Sum	Opacity Average
1	12 35 pm	12 41	530	22.1
2	12 41	12 47	990	41.3
3	12 47	12 53	735	30.6

Overall Average: 31.3

Min.	Seconds 0	15	30	45
0	15	15	15	15
1	20	20	20	20
2	20	20	20	20
3	20	20	20	20
4	20	20	30	30
5	30	30	35	35
0	35	40	40	55
1	55	50	50	40
2	40	40	40	35
3	40	40	40	30
4	35	35	40	40
5	40	40	35	55
0	50	35	40	40
1	45	50	40	40
2	35	30	30	30
3	30	30	25	25
4	20	20	20	25
5	20	20	15	20

Remarks: _____

Received By: _____

Visible Emissions Evaluation Reco

Plant Name: Hercules Inc.

Address: West 7th St.

City: Hattiesburg Miss.

Emission Point: 010

Date: 1-7-85

Is emission point operation normal ? _____

V. E. Observer: Bobbie Donaghue

Certification Expiration: 4-25-85

Set No.	Time Start	Time End	Opacity Sum	Opacity Average
1	10^{23} Am	10^{29}	1180	49.2
2	10^{29}	10^{35}	840	35.0
3	10^{35}	10^{41} Am	770	32.1

Overall Average: 38.8

	Initial	Final
Distance to discharge	2 Lengths	
Direction to discharge	N	
Height of observation point	Ground	
Height of discharge	225 ft	
Plume color	Gray	
Plume background	Blue Sky	
Water vapor in plume ?		
Wind direction (from)	NW	
Wind speed	15MPH	
Ambient temperature	54°	
Discharge temperature		
Sky conditions	Clear	

Min.	Seconds 0	15	30	45
0	40	40	40	40
1	40	40	40	40
2	40	40	40	40
3	40	40	40	40
4	80	100	90	70
5	70	60	40	30
0	30	30	35	35
1	35	35	35	35
2	30	30	30	30
3	35	35	35	35
4	40	40	40	40
5	35	35	40	40
0	40	40	30	30
1	30	30	30	30
2	30	30	30	30
3	35	35	30	30
4	35	35	30	30
5	30	30	35	35

Diagram Of Observation/Discharge Point

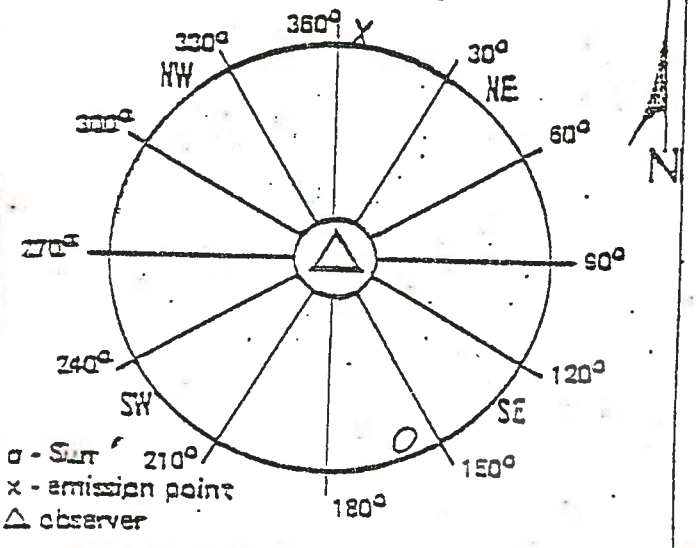

Remarks: _____

Received By: _____

Visible Emissions Evaluation Record

Plant Name: Hercules Inc.

Address: West 7th St.

City: Hattiesburg Miss.

Emission Point: 009

Date: 1-4-85

V. E. Observer: Howard Dunnell / Bobbie Daughdrill

Certification Expiration: 4-25-85

Is emission point operation normal ? _____

	Initial	Final
Distance to discharge	2 Lengths	
Direction to discharge	N	
Height of observation point	Ground	
Height of discharge	200 ft.	
Plume color	WHITE	
Plume background	BLUE	
Water vapor in plume ?		
Wind direction (from)	N.W.	
Wind speed	5-10 MPH	
Ambient temperature	34°F	
Discharge temperature		
Sky conditions	P.C.	

Set No.	Time Start	Time End	Opacity Sum	Opacity Average
1	9:40 A	9:46 A	440	18.3
2	9:46 A	9:52 A	580	24.2
3	9:52 A	9:58 A	860	35.8

Overall Average: 26.1

Min.	Seconds 0	15	30	45
0	20	20	15	15
1	20	20	20	20
2	20	25	20	20
3	15	15	15	15
4	15	15	15	20
5	20	20	20	20
0	20	15	15	15
1	20	20	20	20
2	25	25	25	35
3	35	35	30	25
4	25	25	25	25
5	25	25	25	25
0	25	30	35	45
1	55	75	30	30
2	20	20	20	20
3	20	45	70	60
4	50	25	25	20
5	35	50	35	20

Diagram Of Observation/Discharge Point

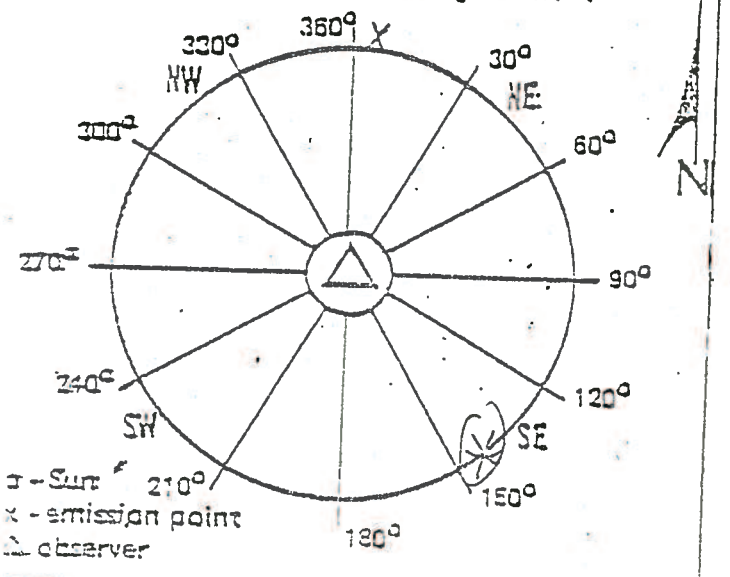

Remarks: _____

Visible Emissions Evaluation Reco

Plant Name: Hercules Inc.

Address: West 7th St.

City: H'burg Miss.

Emission Point: 010

Date: 1-3-85

Is emission point operation normal ?

V. E. Observer: Howard Sumrall ~~Bobbie Draughn~~

Certification Expiration: 4-25-85

Set No.	Time Start	Time End	Opacity Sum	Opacity Average
1	1:54 pm	2:00 pm	640	26.7
2	2:00	2:06 pm	595	24.8
3	2:00 pm	2:12 pm	845	35.2

Overall Average: 28.9

	Initial	Final
Distance to discharge	2 Lengths	
Direction to discharge	N	
Height of observation point	Ground	
Height of discharge	225 ft	
Plume color	WHITE	
Plume background	GRAY	
Water vapor in plume ?		
Wind direction (from)	NORTH	
Wind speed	10-15 MPH	
Ambient temperature	37°F	
Discharge temperature		
Sky conditions	Cloudy	

Min.	Seconds 0	15	30	45
0	25	25	25	30
1	35	60	50	35
2	30	30	20	20
3	25	30	30	20
4	20	20	20	15
5	15	15	15	20
0	20	20	20	20
1	25	25	30	30
2	30	40	35	30
3	25	20	20	20
4	20	25	25	30
5	25	20	20	20
0	20	30	30	30
1	30	30	30	30
2	35	50	60	50
3	40	35	30	25
4	35	35	50	40
5	35	35	30	30

Diagram Of Observation/Discharge Point

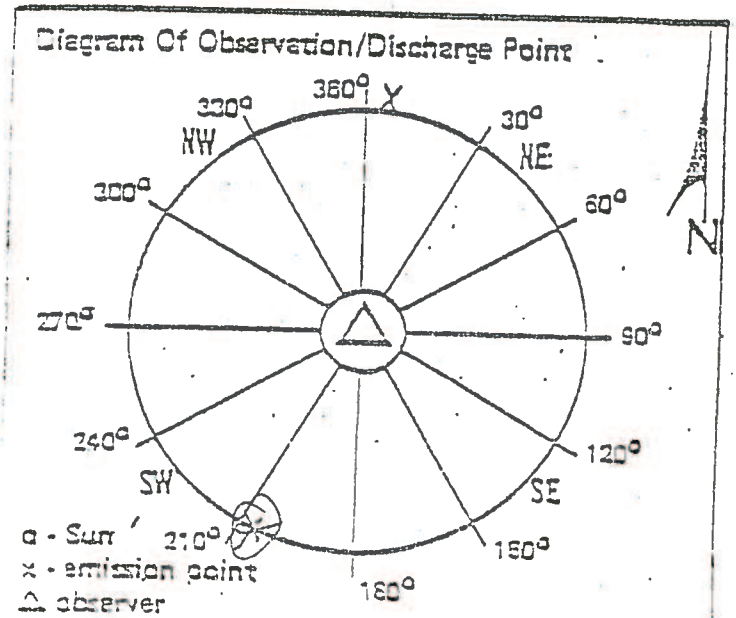

Remarks:

Visible Emissions Evaluation Reco

Plant Name: Hercules Inc.

Address: West 7th St.

City: H'burg Miss.

Emission Point: 009

Date: 1-3-85

Is emission point operation normal ?

	Initial	Final
Distance to discharge	2 Lengths	
Direction to discharge	N	
Height of observation point	Ground	
Height of discharge	200 ft.	
Plume color	BROWN	
Plume background	GRAY	
Water vapor in plume ?		
Wind direction (from)	NORTH	
Wind speed	10-15 MPH	
Ambient temperature	37°F	
Discharge temperature		
Sky conditions	Cloudy	

Diagram Of Observation/Discharge Point

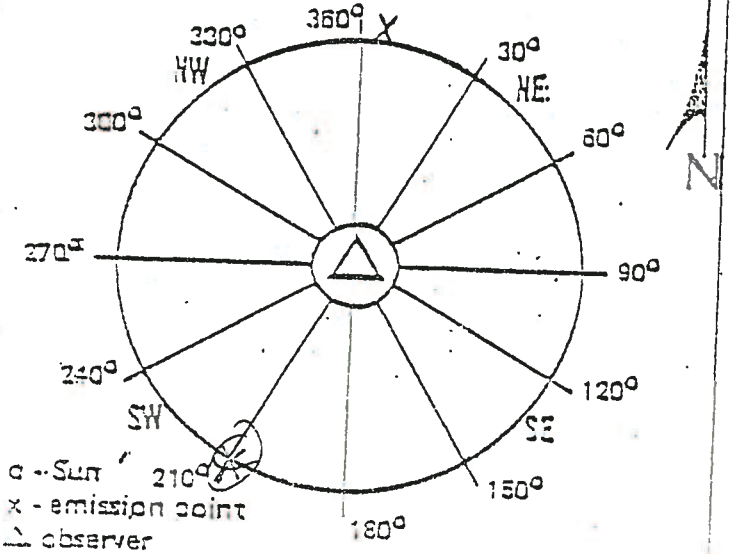

V. E. Observer: Howard Sumrall ~~Bobbie Draughn~~

Certification Expiration: 4-25-85

Set No.	Time Start	Time End	Opacity Sum	Opacity Averag
1	1:54 Pm	2:00 Pm	945	39.4
2	2:00 Pm	2:06 Pm	1,435	59.8
3	2:06 Pm	2:12 Pm	1,145	47.7

Overall Average: 49.0

Min.	Seconds 0	15	30	45
0	25	25	25	35
1	55	70	70	30
2	30	30	25	25
3	45	55	50	35
4	30	30	25	25
5	25	45	60	75
0	70	50	35	25
1	25	25	25	35
2	65	85	50	40
3	35	25	25	25
4	55	65	40	40
5	35	30	40	50
0	65	65	65	45
1	30	30	35	50
2	50	60	65	65
3	40	40	35	35
4	50	60	50	50
5	45	40	35	40

Remarks:

Hercules Incorporated
Forest Resources
P. O. Drawer 1937
Hattiesburg, MS 39401
(601) 545-3450

January 18, 1985

Mr. Dwight K. Wylie, P.E. Chief
Air Division
Bureau of Pollution Control
P. O. Box 10385
Jackson, Mississippi 39209

Dear Mr. Wylie:

In reference to operating permit No. 0800-0001, please find the attached monthly report detailing the compliance status of the boilers for emission points 009 and 010.

We will continue to submit this report on a monthly basis.

Very truly yours,

Charles Jordan
Environmental Coordinator

CSJ:ml

Attachments

0199Y

1/17/85

To: C.S. Jordan

From: R.A. Van Beek

Operating Permit No. 00800-00001 Hattiesburg, MS
Issued For The Operation of Air Emissions Equipment

In reference to the above permit, Part III, Other Requirements, 1-C, the following monthly report is for December, 1984.

The report details the compleince status of the boilers with copies of all visible emissions evaluations in which <u>any</u> reading exceeds 40% opacity.

Number of VEE copies attached = 5.

In addition, copies of log sheets are attached for all visible emission evaluations when opacity exceeds 40% for two minutes or more.

R. A. Van Beek

Visible Emissions Evaluation Reco

Plant Name: Hercules Inc.

Address: West 7th St.

City: Hattiesburg Miss.

Emission Point: 010

Date: 12-28-84

Is emission point operation normal ? _____

V. E. Observer: Bobbie Donaghey

Certification Expiration: 4-25-85

Set No.	Time Start	Time End	Opacity Sum	Opacity Average
1	9^22 Am	9^28	810	33.8
2	9^28	9^34	1075	44.8
3	9^34	9^40 Am	1790	74.6

Overall Average: 51.1

	Initial	Final
Distance to discharge	2 Lengths	
Direction to discharge	N	
Height of observation point	Ground	
Height of discharge	225 ft	
Plume color	Gray	
Plume background	Gray sky	
Water vapor in plume ?		
Wind direction (from)	SE	
Wind speed	5 mph	
Ambient temperature	68°	
Discharge temperature		
Sky conditions	Cloudy	

Min.	Seconds 0	15	30	45
0	30	30	30	30
1	30	30	30	30
2	30	30	30	30
3	30	30	20	20
4	50	50	45	45
5	40	50	40	30
0	20	30	30	50
1	40	40	50	30
2	30	30	40	50
3	50	40	40	70
4	60	60	60	50
5	50	50	55	50
0	50	60	70	60
1	60	60	60	70
2	50	40	50	60
3	90	80	80	100
4	80	80	100	100
5	90	100	100	100

Diagram Of Observation/Discharge Point

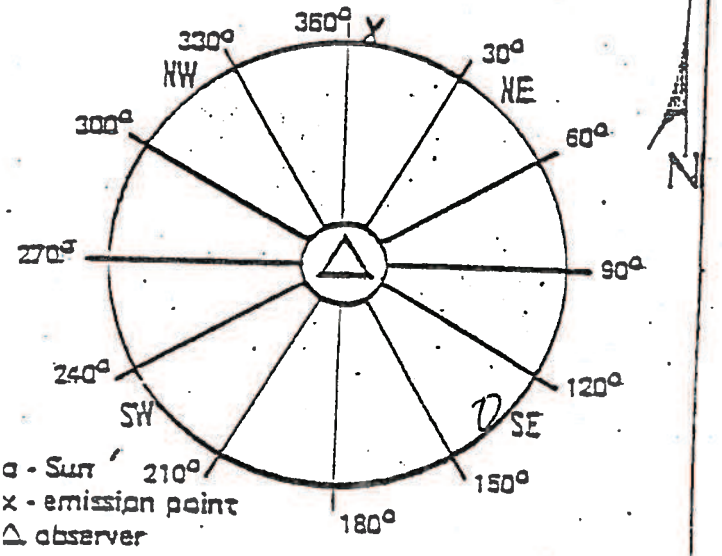

Remarks: _____

Received By: _____

BOILER ROOM ENVIRONMENTAL LOG SHEET

Cleaned Fires		7 - 3 Shift	3 - 11 Shift	11 - 7 Shift
No. 1 Boiler	Started		5:00	
	Stopped			
No. 2 Boiler	Started			
	Stopped			
No. 3 Boiler	Started			
	Stopped	7:00	3:15	
No. 4 Boiler	Started	7:55		
	Stopped			

Comments on Boiler Operation

OPACITY EVALUATION - WOOD BURNING BOILERS

BOILER NO. 1			BOILER NO. 2			BOILER NO. 3			BOILER NO. 4			
Time	Duration	Note	Time	Duration	Note	Time	Duration	Note	Time	Duration	Note	1.Cleaning Boi
7:25	1¼	1	6:40	10-5	1				9:20	20-5	3	2.Fuel Oil Adjustment
			2:35	20-5	3							3.Load Changes
									1:54	10-5	1	4.Meter Defec
									12:47	10-5	3	5.Cleaning Me Lenses
												6. ~~Wood~~

COMMENTS ON OPACITY & METER OPERATION

Visible Emissions Evaluation Reco

Plant Name: Hercules Inc.

Address: West 7th St.

City: Hattiesburg Miss.

Emission Point: 010

Date: 12-19-84

Is emission point operation normal ? _____

V. E. Observer: Bobbie Draughn

Certification Expiration: 4-25-85

Set No.	Time Start	Time End	Opacity Sum	Opacity Average
1	11 52 Am	11 58 Am	715	29.8
2	1158	1204	1155	48.1
3	12 04 pm	12 10 pm	965	40.2

Overall Average: 39.4

	Initial	Final
Distance to discharge	2 Lengths	
Direction to discharge	N	
Height of observation point	Ground	
Height of discharge	225 ft	
Plume color	Gray	
Plume background	Gray Sky	
Water vapor in plume ?		
Wind direction (from)	W	
Wind speed	5 mph	
Ambient temperature	68°	
Discharge temperature		
Sky conditions	Cloudy	

Diagram Of Observation/Discharge Point

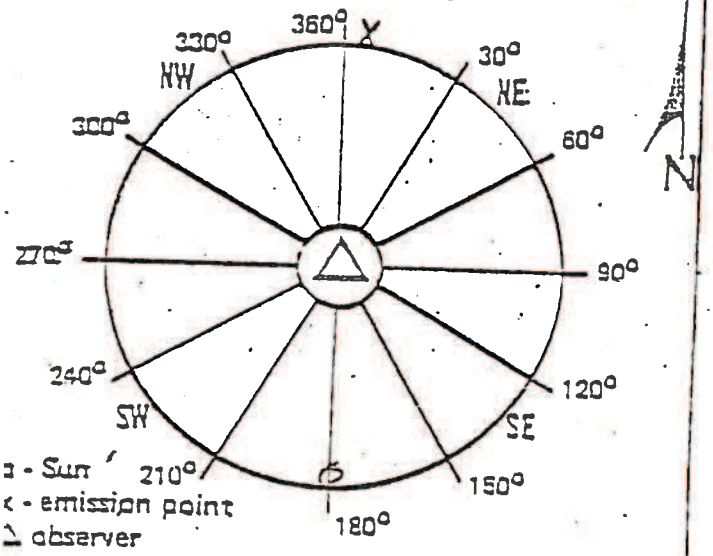

Min.	Seconds 0	15	30	45
0	20	20	20	15
1	40	40	40	30
2	30	25	25	40
3	40	30	30	30
4	30	30	30	30
5	30	30	30	30
0	35	35	35	35
1	40	40	50	70
2	60	60	50	50
3	50	55	50	50
4	50	50	60	50
5	45	45	45	45
0	50	65	60	40
1	35	60	50	50
2	50	50	40	30
3	25	40	40	30
4	30	20	40	30
5	30	40	30	30

Remarks: _____

Received By: _____

BOILER ROOM ENVIRONMENTAL LOG SHEET

Cleaned Fires		7 - 3 Shift	3 - 11 Shift	11 - 7 Shift
No. 1 Boiler	Started	10:30	6:15	12:15
	Stopped	11:10	7:05	[illegible]
No. 2 Boiler	Started	[illegible]	7:50	1:30
	Stopped	12:50	8:35	[illegible]
No. 3 Boiler	Started	7:30	3:15	[illegible]
	Stopped	9:10	4:25	[illegible]
No. 4 Boiler	Started	9:40	5:00	11:00
	Stopped	[illegible]	5:55	[illegible]

Comments on Boiler Operation

OPACITY EVALUATION - WOOD BURNING BOILERS

BOILER NO. 1			BOILER NO. 2			BOILER NO. 3			BOILER NO. 4		
Time	Duration	Note	Time	Duration	Note	Time	Duration	Note	Time	Duration	Note
		6	10:55	40-2	1				7:52	5	[illegible]
		6							11:07	30-[illegible]	1
									11:35	5-[illegible]	1

1. Cleaning Bo
2. Fuel Oil Adjustment
3. Load Change
4. Meter Defec
5. Cleaning Me Lenses
6. Wood

COMMENTS ON OPACITY & METER OPERATION

Visible Emissions Evaluation Reco

Plant Name: Hercules Inc.

Address: West 7th St.

City: Hilburg Miss.

Emission Point: 010

Date: 12-13-84

Is emission point operation normal ? _____

V. E. Observer: Bobbie Donaghue

Certification Expiration: 4-25-85

Set No.	Time Start	Time End	Opacity Sum	Opacity Average
1	10 09 Am	10 15	750	31.3
2	10 15	10 21	675	28.1
3	10 21	10 27 Am	990	41.3

Overall Average: 33.6

	Initial	Final
Distance to discharge	2 Lengths	
Direction to discharge	N	
Height of observation point	Ground	
Height of discharge	225 ft	
Plume color	Gray	
Plume background	Gray Sky	
Water vapor in plume ?		
Wind direction (from)	SE	
Wind speed	10-15 mph	
Ambient temperature	73°	
Discharge temperature		
Sky conditions	Cloudy	

Diagram Of Observation/Discharge Point

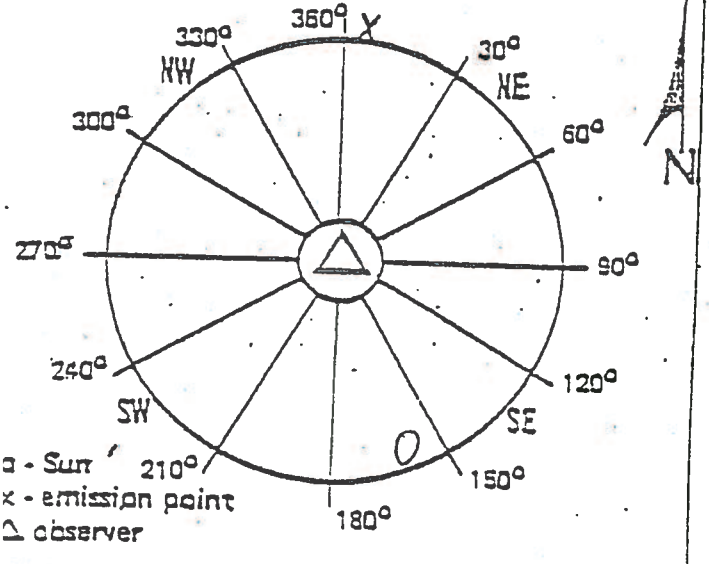

Min.	Seconds 0	15	30	45
0	40	40	30	20
1	25	25	30	30
2	25	25	25	25
3	25	25	25	25
4	40	40	40	40
5	40	35	35	40
0	30	30	30	30
1	30	30	30	20
2	25	20	35	35
3	25	20	20	25
4	35	35	30	30
5	30	30	25	25
0	20	20	25	25
1	25	40	40	40
2	50	50	55	60
3	50	50	50	50
4	45	45	55	50
5	45	40	30	30

Remarks: _____

Received By: _____

BOILER ROOM ENVIRONMENTAL LOG SHEET

Cleaned Fires		7 - 3 Shift	3 - 11 Shift	11 - 7 Shift
No. 1 Boiler	Started	9:00	5:45	1:35
	Stopped	3:00	[illegible]	5:00
No. 2 Boiler	Started	9:15	7:15	[illegible]
	Stopped	11:25	9:10	[illegible]
No. 3 Boiler	Started	7:00	3:00	[illegible]
	Stopped	4:50	11:00	2:30
No. 4 Boiler	Started			
	Stopped			

Comments on Boiler Operation

OPACITY EVALUATION - WOOD BURNING BOILERS

BOILER NO. 1			BOILER NO. 2			BOILER NO. 3			BOILER NO. 4			
Time	Duration	Note	Time	Duration	Note	Time	Duration	Note	Time	Duration	Note	1. Cleaning Boi
			[illegible]		1							2. Fuel Oil Adjustment
												3. Load Changes
												4. Meter Defect
												5. Cleaning Met Lenses
												6. Wood

COMMENTS ON OPACITY & METER OPERATION

Visible Emissions Evaluation Recc

Plant Name: Hercules Inc.

Address: West 7th St.

City: Hi'land Miss.

Emission Point: 009

Date: 12-11-84

Is emission point operation normal ? _____

V. E. Observer: Bobbie Draughn

Certification Expiration: 4-25-85

Set No.	Time Start	Time End	Opacity Sum	Opacity Average
1	1 0' pm	1 07	530	22.1
2	1 07	1 13	420	17.5
3	1 13	1 19 pm	960	40.0

Overall Average: 26.5

	Initial	Final
Distance to discharge	2 Lengths	
Direction to discharge	N	
Height of observation point	Ground	
Height of discharge	200 ft.	
Plume color	Gray	
Plume background	Blue Sky	
Water vapor in plume-?		
Wind direction (from)	NW	
Wind speed	5 mph	
Ambient temperature	71°	
Discharge temperature		
Sky conditions	Clear	

Min.	Seconds 0	15	30	45
0	25	25	25	25
1	25	25	25	20
2	20	20	20	20
3	20	20	25	25
4	20	20	20	25
5	20	20	20	20
0	20	20	20	20
1	15	15	15	15
2	15	15	15	15
3	15	15	15	15
4	15	20	20	20
5	20	25	20	20
0	20	30	40	40
1	30	25	30	25
2	35	40	40	50
3	55	55	45	40
4	35	35	60	50
5	50	50	40	40

Diagram Of Observation/Discharge Point

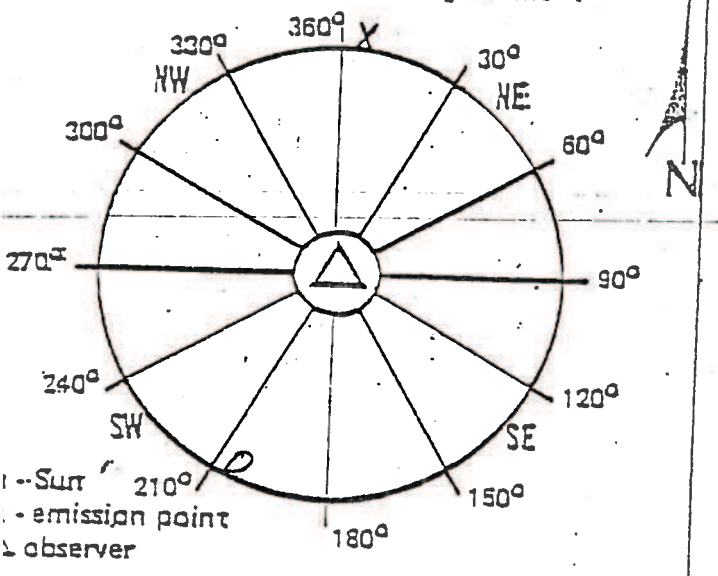

Remarks: _____

Received By: _____

Visible Emissions Evaluation Reco

Plant Name: Hercules Inc.

Address: West 7th St.

City: Hlbrg Miss.

Emission Point: 010

Date: 12-5-84

Is emission point operation normal ? _____

V. E. Observer: Bobbie Draughon

Certification Expiration: 4-25-85

Set No.	Time Start	Time End	Opacity Sum	Opacity Average
1	9 35 am	9 41 am	590	24.6
2	9 41 am	9 47	555	23.1
3	9 47	9 53 am	670	28.8

Overall Average: 25.5

	Initial	Final
Distance to discharge	2 Lengths	
Direction to discharge	N	
Height of observation point	Ground	
Height of discharge	225 ft	
Plume color	Gray	
Plume background	Gray Sky	
Water vapor in plume ?		
Wind direction (from)	SE	
Wind speed	5-10 mph	
Ambient temperature	46°	
Discharge temperature		
Sky conditions	Cloudy	

Min.	Seconds 0	15	30	45
0	25	25	25	25
1	25	25	25	25
2	25	25	25	25
3	25	25	25	25
4	25	25	25	25
5	20	20	25	25
0	25	25	25	25
1	25	25	25	25
2	25	25	25	25
3	25	25	25	25
4	25	25	25	15
5	15	15	15	20
0	15	15	15	15
1	20	20	20	20
2	15	10	15	15
3	20	20	20	40
4	50	50	60	60
5	50	50	40	35

Diagram Of Observation/Discharge Point

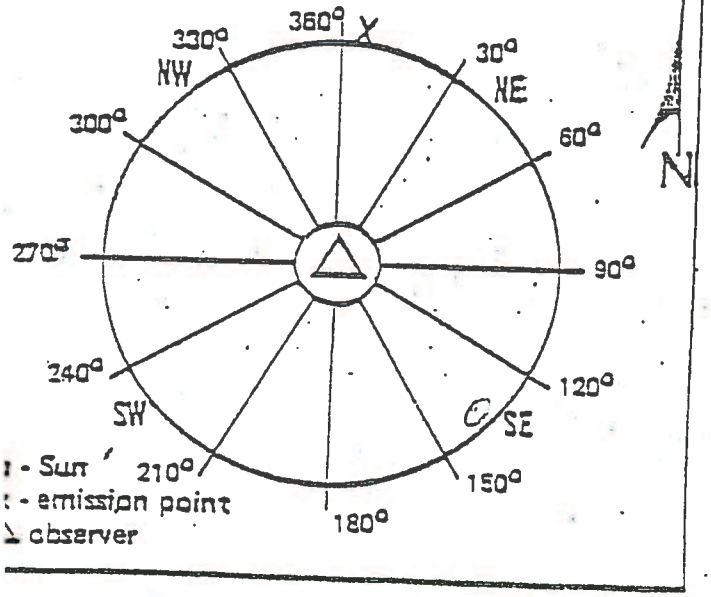

Remarks: _____

Received By: _____

Hercules Incorporated
West 7th Street
P.O. Box 1937
Hattiesburg, MS 39401
(601) 545-3450

December 14, 1984

Mr. Dwight K. Wylie, P.E. Chief
Air Division
Bureau of Pollution Control
P. O. Box 10385
Jackson, Mississippi 39209

Dear Mr. Wylie:

In reference to operating permit No. 0800-0001, please find the attached monthly report detailing the compliance status of the boilers for emission points 009 and 010.

We will continue to submit this report on a monthly basis.

Very truly yours,

Charles Jordan

Charles Jordan
Environmental Coordinator

CSJ:sw
0199Y

Attachments

Visible Emissions Evaluation Rec

Plant Name: Hercules Inc.

Address: West 7th St.

City: Hattiesburg Miss.

Emission Point: 010

Date: 11-30-84

V. E. Observer: Howard Sumrall

Certification Expiration: 4-25-85

Is emission point operation normal ? _____

	Initial	Final
Distance to discharge	2 Lengths	
Direction to discharge	N	
Height of observation point	Ground	
Height of discharge	225 ft	
Plume color	White	
Plume background	Blue	
Water vapor in plume ?		
Wind direction (from)	S.W.	
Wind speed	5-10 MPH	
Ambient temperature	65°F	
Discharge temperature		
Sky conditions	P.C.	

Set No.	Time Start	Time End	Opacity Sum	Opacity Aver
1	9:53 Am	9:59 Am	585	24.
2	9:59 Am	10:05 Am	1015	42.
3	10:05 Am	10:11 Am	825	34.

Overall Average: 33.7

Min.	Seconds 0	15	30	45
0	20	20	20	2
1	20	20	20	25
2	25	25	25	25
3	25	25	25	25
4	25	25	30	30
5	30	30	25	25
0	25	30	30	30
1	30	35	35	30
2	30	35	40	40
3	50	50	50	50
4	45	45	50	55
5	55	60	60	55
0	50	50	45	50
1	50	50	50	40
2	30	25	30	30
3	30	30	30	30
4	30	30	30	25
5	20	20	25	25

Diagram Of Observation/Discharge Point

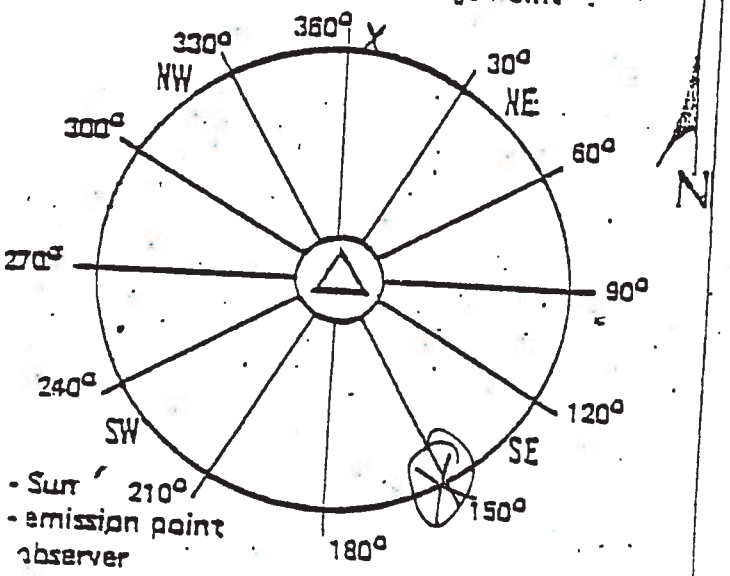

Remarks: _____

BOILER ROOM ENVIRONMENTAL LOG SHEET

Cleaned Fires		7 - 3 Shift	3 - 11 Shift	11 - 7 Shift
o. 1 Boiler	Started		[illegible]	[illegible]
	Stopped		[illegible]	[illegible]
o. 2 Boiler	Started		[illegible]	[illegible]
	Stopped		[illegible]	[illegible]
o. 3 Boiler	Started		[illegible]	[illegible]
	Stopped		[illegible]	[illegible]
o. 4 Boiler	Started			
	Stopped			

omments on Boiler Operation

OPACITY EVALUATION - WOOD BURNING BOILERS

BOILER NO. 1			BOILER NO. 2			BOILER NO. 3			BOILER NO. 4		
ime	Duration	Note	Time	Duration	Note	Time	Duration	Note	Time	Duration	Note
[illegible]	30-5	2	1:15	10-5	6	[illegible]	[illegible]	3			
						[illegible]	10-5	6			
						[illegible]	10-5	6			

1. Cleaning Boil
2. Fuel Oil Adjustment
3. Load Changes
4. Meter Defect
5. Cleaning Mete Lenses
6. Wood

MENTS ON OPACITY & METER OPERATION

Visible Emissions Evaluation Recor

Plant Name: Hercules Inc.

Address: West 7th St.

City: Hattiesburg Miss.

Emission Point: 009

Date: 11-19-84

s emission point operation normal ? _____

V. E. Observer: Bobbie Donaghey

Certification Expiration: 4-25-85

Set No.	Time Start	Time End	Opacity Sum	Opacity Average
1	7[20] AM	7[26] AM	1525	63.5
2	7[26]	7[32]	455	19.0
3	7[32] AM	7[38] AM	120	5.0

Overall Average: 29.2

	Initial	Final
listance to discharge	2 Lengths	
lirection to discharge	N	
eight of observation point	Ground	
eight of discharge	200 ft.	
ume color	Gray	
ume background	Blue Sky	
ater vapor in plume ?		
nd direction (from)	NW	
nd speed	5-10 mph	
mbient temperature	56°	
ischarge temperature		
/ conditions	PC	

Min.	Seconds 0	15	30	45
0	80	100	100	100
1	100	100	90	80
2	80	80	75	70
3	60	60	50	50
4	40	30	30	30
5	30	30	30	30
0	30	30	25	30
1	25	25	20	25
2	20	20	20	20
3	20	20	20	20
4	15	15	15	15
5	10	5	5	5
0	5	5	5	5
1	5	5	5	5
2	5	5	5	5
3	5	5	5	5
4	5	5	5	5
5	5	5	5	5

Remarks: _____

iagram Of Observation/Discharge Point

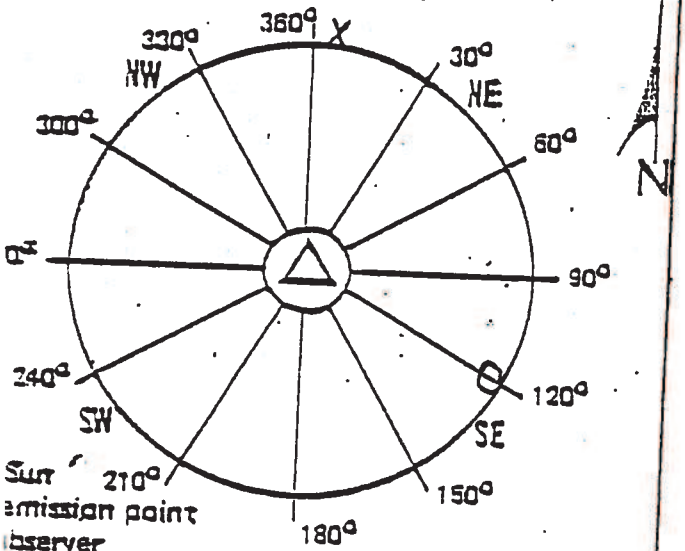

Sun
emission point
bserver

DATE _____

BOILER ROOM ENVIRONMENTAL LOG SHEET

Cleaned Fires		7 - 3 Shift	3 - 11 Shift	11 - 7 Shift
No. 1 Boiler	Started	6:55		11 [illegible]
	Stopped	7 [illegible]		11 [illegible]
No. 2 Boiler	Started	7:55		12 [illegible]
	Stopped	9:10		[illegible]
No. 3 Boiler	Started	10 [illegible]		2 [illegible] 0
	Stopped	[illegible] 5		3 3 5
No. 4 Boiler	Started			X
	Stopped			

Comments on Boiler Operation

OPACITY EVALUATION - WOOD BURNING BOILERS

BOILER NO. 1			BOILER NO. 2			BOILER NO. 3			BOILER NO. 4		
Time	Duration	Note	Time	Duration	Note	Time	Duration	Note	Time	Duration	Note
7:20	30 [illegible]	(1)	2:47	30-5	2	10 [illegible]	1M	3			
			6:47	30-5	2						
			1 00	30-5	1						

1. Cleaning Boi
2. Fuel Oil Adjustment
3. Load Changes
4. Meter Defect
5. Cleaning Meter Lenses
6. Wood

COMMENTS ON OPACITY & METER OPERATION _____

Visible Emissions Evaluation Record

Plant Name: Hercules Inc.

Address: West 7th St.

City: Hattiesburg Miss.

Emission Point: 009

Date: 11-16-84

Is emission point operation normal? _____

V. E. Observer: Bobbie Draughon

Certification Expiration: 4-25-85

Set No.	Time Start	Time End.	Opacity Sum	Opacity Average
1	8:05 Am	8:11 Am	825	34.4
2	8:11	8:17	905	37.7
3	8:17 Am	8:23 Am	735	30.6

Overall Average: 34.2

	Initial	Final
Distance to discharge	2 Lengths	
Direction to discharge	N	
Height of observation point	Ground	
Height of discharge	200 ft.	
Plume color	Gray	
Plume background	Gray Sky	
Water vapor in plume?		
Wind direction (from)	N	
Wind speed	5 mph	
Ambient temperature	61°	
Discharge temperature		
Other conditions	Raining	

Min.	Seconds 0	15	30	45
0	30	30	30	30
1	30	30	30	30
2	30	30	35	35
3	35	35	35	35
4	45	30	40	30
5	35	35	50	50
6	50	40	30	25
7	25	25	25	30
8	40	40	40	40
9	35	35	35	35
10	35	50	60	55
11	45	35	40	35
12	40	35	35	35
13	40	30	40	30
14	30	35	30	30
15	30	35	30	30
16	30	25	25	20
17	20	25	25	30

Diagram Of Observation/Discharge Point

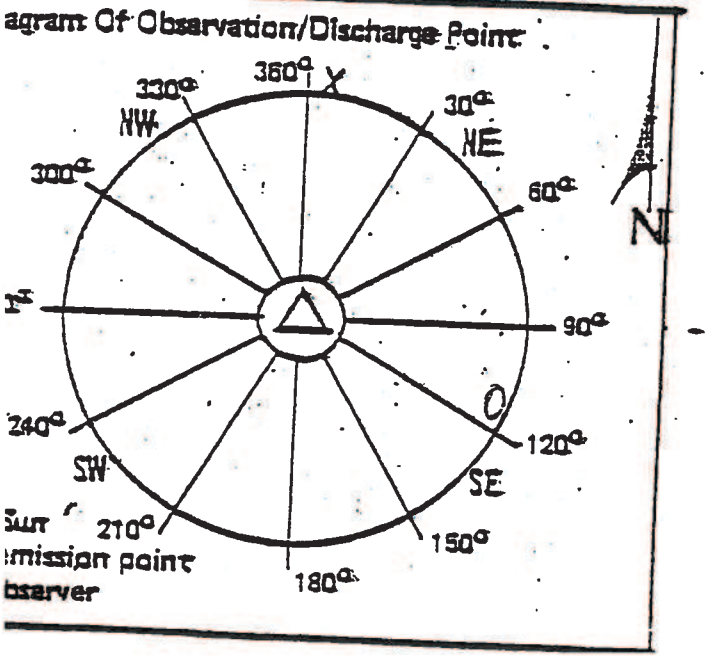

Sun
Emission point
Observer

Remarks: _____

Received By: _____

Visible Emissions Evaluation Record

Plant Name: Hercules Inc.

Address: West 7th St.

City: Hollandale Miss.

Emission Point: 009

Date: 11-15-84

Is emission point operation normal ?

V. E. Observer: Bobbie Draughon

Certification Expiration: 4-25-85

Set No.	Time		Opacity	
	Start	End	Sum	Average
1	10 25 Am	10 31 Am	1015	42.3
2	10 31	10 37	1215	50.6
3	10 37	10 43 Am	1170	49.9

Overall Average: 47.2

	Initial	Final
Distance to discharge	2 Lengths	
Direction to discharge	N	
Height of observation point	Ground	
Height of discharge	200 ft.	
Plume color	White	
Plume background	Blue Sky	
Water vapor in plume ?		
Wind direction (from)	SE	
Wind speed	5-10 mph	
Ambient temperature	75°	
Discharge temperature		
Sky conditions	FC	

Min.	Seconds 0	15	30	45
0	40	40	35	35
1	35	35	50	50
2	45	45	40	30
3	30	40	40	40
4	50	50	40	40
5	45	60	60	40
0	40	40	50	40
1	50	50	40	50
2	50	45	45	50
3	50	50	50	50
4	45	50	40	40
5	40	60	60	50
0	50	50	45	45
1	45	45	50	50
2	50	50	40	40
3	40	50	50	60
4	50	50	50	50
5	50	50	50	60

Diagram Of Observation/Discharge Point

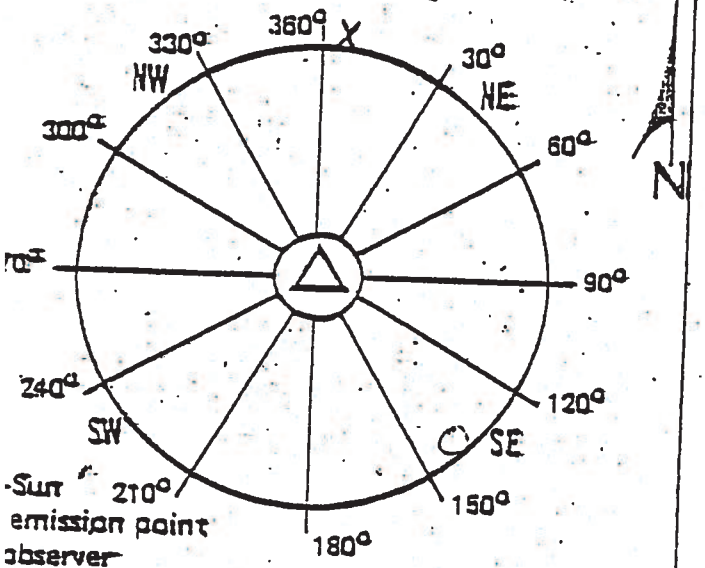

Remarks:

BOILER ROOM ENVIRONMENTAL LOG SHEET

Cleaned Fires		7 - 3 Shift	3 - 11 Shift	11 - Shift
No. 1 Boiler	Started	7:10	3:30	11:2
	Stopped	8:20	4:20	12 -
No. 2 Boiler	Started	11:00	7:00	
	Stopped	11:45		
No. 3 Boiler	Started			2 5
	Stopped			5 5
No. 4 Boiler	Started			
	Stopped			

Comments on Boiler Operation

OPACITY EVALUATION - WOOD BURNING BOILERS

BOILER NO. 1			BOILER NO. 2			BOILER NO. 3			BOILER NO. 4		
Time	Duration	Note	Time	Duration	Note	Time	Duration	Note	Time	Duration	Note
						3:15	30 s	1			

1. Cleaning Bo
2. Fuel Oil Adjustment
3. Load Change
4. Meter Defec
5. Cleaning Me Lenses
6. Wood

MMENTS ON OPACITY & METER OPERATION

Visible Emissions Evaluation Record

Plant Name: Hercules Inc.

Address: West 7th St.

City: Hi'burg Miss.

Emission Point: 009

Date: 11-14-84

Is emission point operation normal ? _____

V. E. Observer: Bobbie Draughon

Certification Expiration: 4-25-85

Set No.	Time Start	Time End	Opacity Sum	Opacity Average
1	8^35 am	8^41	900	37.5
2	8^41	8^47 am	1110	46.
3	8^47	8^53 am	1045	43.5

Overall Average: 42.4

	Initial	Final
Distance to discharge	2 Lengths	
Direction to discharge	N	
Height of observation point	Ground	
Height of discharge	200 ft.	
Plume color	White	
Plume background	Blue Sky	
Water vapor in plume ?		
Wind direction (from)	SE	
Wind speed	5-10 mph	
Ambient temperature	48°	
Discharge temperature		
Sky conditions	Clear	

Min.	Seconds 0	15	30	45
0	30	30	30	30
1	35	35	40	40
2	35	35	40	40
3	40	40	40	40
4	40	40	40	40
5	40	40	40	40
0	35	35	35	35
1	40	40	40	40
2	40	40	40	40
3	40	40	60	70
4	60	50	50	60
5	60	70	50	40
0	40	40	40	40
1	40	45	50	50
2	50	60	50	50
3	45	45	45	40
4	45	45	40	40
5	40	35	35	35

Diagram Of Observation/Discharge Point

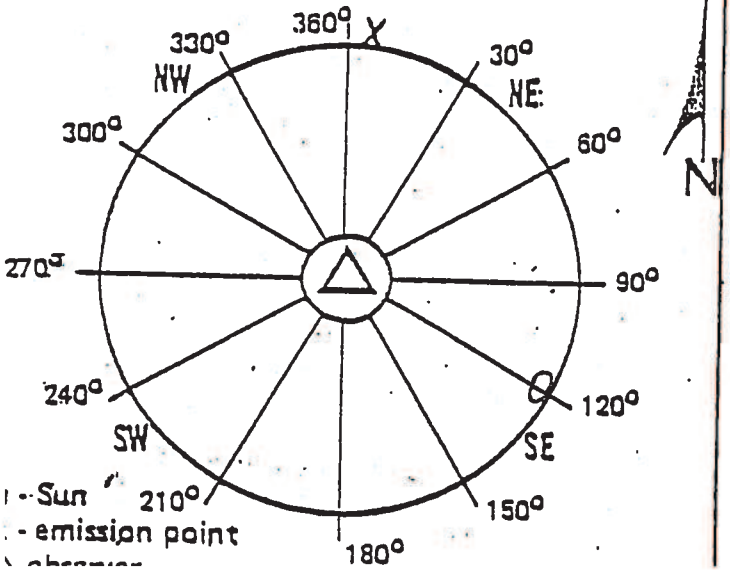

Remarks: _____

DATE 11-1-94

BOILER ROOM ENVIRONMENTAL LOG SHEET

Cleaned Fires		7 - 3 Shift	3 - 11 Shift	11 - 7 Shift
o. 1 Boiler	Started	7:20	3:25	11:20
	Stopped	8:30	4:45	12:10
o. 2 Boiler	Started	9:15	6:05	12:30
	Stopped	10:30	7:30	1:2[illegible]
o. 3 Boiler	Started	11:10	9:10	
	Stopped			
o. 4 Boiler	Started			
	Stopped			

omments on Boiler Operation

OPACITY EVALUATION - WOOD BURNING BOILERS

BOILER NO. 1			BOILER NO. 2			BOILER NO. 3			BOILER NO. 4		
ime	Duration	Note	Time	Duration	Note	Time	Duration	Note	Time	Duration	Note
15	10.5	2	1250	10.5	1						

1. Cleaning Boi
2. Fuel Oil Adjustment
3. Load Changes
4. Meter Defect
5. Cleaning Mete Lenses

MENTS ON OPACITY & METER OPERATION

Visible Emissions Evaluation Record

ant Name: Hercules Inc.

ddress: West 7th St.

ty: Hattiesburg Miss.

nission Point: 009

ite: 11-8-84

emission point operation normal ? _____

V. E. Observer: Bobbie Draughn

Certification Expiration: 10-19-84

Set No.	Time		Opacity	
	Start	End	Sum	Average
1	10:10 A	10:16 A	930	39
2	10:16 A	10:22 A	600	25
3	10:22 A	10:28 A	600	25

Overall Average: 30

	Initial	Final
stance to discharge	2 Lengths	
rection to discharge	N	
ight of observation point	Ground	
ight of discharge	225 ft.	
ime color	BLACK & WHITE	
ime background	BLUE	
ter vapor in plume ?		
id direction (from)	EAST	
id speed	5-10 MPH	
bient temperature	66°F	
charge temperature		
conditions		

Min.	Seconds 0	15	30	45
0	75	70	25	25
1	25	90	95	55
2	25	25	25	25
3	25	25	30	30
4	40	30	25	25
5	25	25	25	25
0	25	25	25	25
1	25	25	25	25
2	25	25	25	25
3	25	25	25	25
4	25	25	25	25
5	25	25	25	25
0	25	25	25	30
1	30	25	25	25
2	25	25	25	25
3	25	30	30	30
4	25	25	25	25
5	25	25	25	25

agram Of Observation/Discharge Point

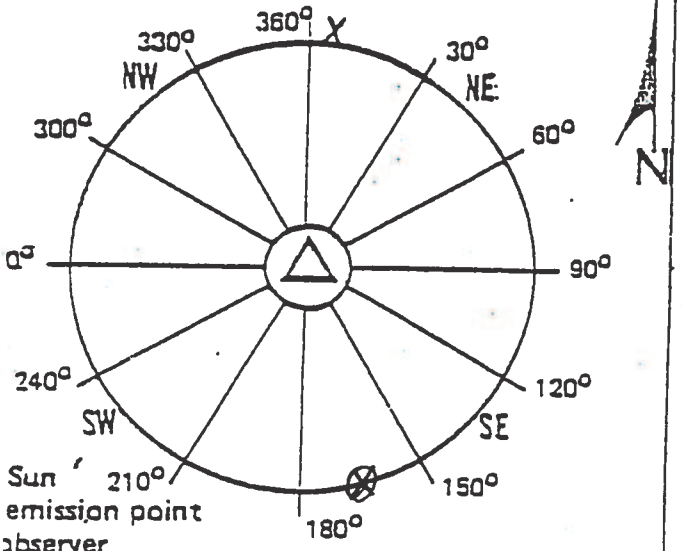

Remarks: _____

Received By: _____

Visible Emissions Evaluation Record

Plant Name: Hercules Inc.

Address: West 7th St.

City: Hilbig Miss.

Emission Point: 009

Date: 11-5-84

Is emission point operation normal ? _____

V. E. Observer: Howard Dumrall

~~Robbie Dumrall~~

Certification Expiration: ~~10-19-84~~ 4-19-85

Set No.	Time Start	Time End	Opacity Sum	Opacity Average
1	8:23 A	8:29 A	270	52
2	8:29 A	8:35 A	895	37
3	8:35 A	8:41 A	1365	57

Overall Average: 42

	Initial	Final
Distance to discharge	2 Lengths	
Direction to discharge	N	
Height of observation point	Ground	
Height of discharge	200 ft.	
Plume color	WHITE	
Plume background	GRAY	
Water vapor in plume ?		
Wind direction (from)	S.W.	
Wind speed	5-10 MPH	
Ambient temperature		
Discharge temperature	65°F	
Sky conditions	P.C.	

Min.	Seconds 0	15	30	45
0	25	25	25	25
1	25	25	25	15
2	20	20	30	30
3	40	45	40	45
4	45	40	40	35
5	40	40	35	35
0	40	40	40	45
1	45	45	35	35
2	35	35	30	25
3	30	30	35	40
4	40	40	40	45
5	35	35	35	40
0	40	40	40	30
1	30	30	40	45
2	50	60	65	60
3	70	70	65	65
4	65	65	65	70
5	75	75	75	75

Diagram Of Observation/Discharge Point

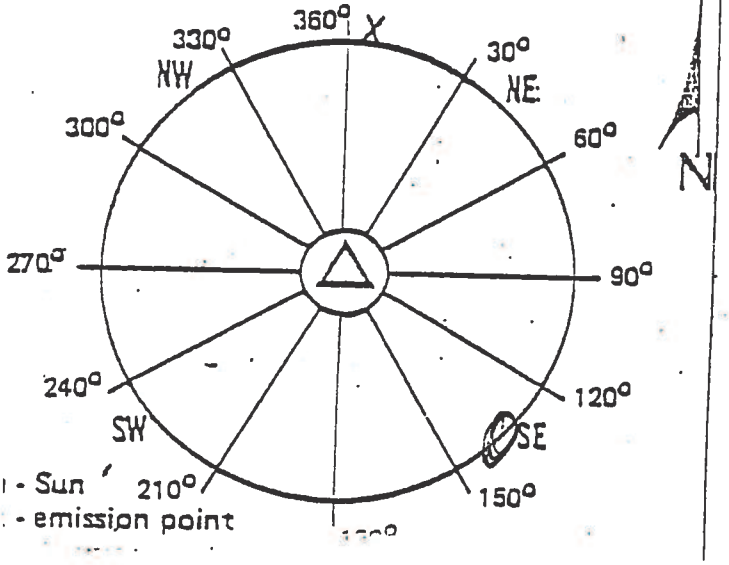

Remarks: _____

DATE _____

BOILER ROOM ENVIRONMENTAL LOG SHEET

Cleaned Fires		7 - 3 Shift	3 - 11 Shift	11 - Shift
No. 1 Boiler	Started	8 20	5:00	
	Stopped		5:20	
No. 2 Boiler	Started	11 20	6:	
	Stopped		:0	
No. 3 Boiler	Started	7	3:30	
	Stopped	8		
No. 4 Boiler	Started			
	Stopped			

Comments on Boiler Operation

OPACITY EVALUATION - WOOD BURNING BOILERS

BOILER NO. 1			BOILER NO. 2			BOILER NO. 3			BOILER NO. 4			
Time	Duration	Note	Time	Duration	Note	Time	Duration	Note	Time	Duration	Note	
2 25	5 - 3	1	4:50	30 - 5	2							1. Cleaning Bo
0-35	3-M	4										2. Fuel Oil Adjustment
:57	2 - 5	2										3. Load Change
	30-5	1										4. Meter Defec
												5. Cleaning Me Lenses
												6. Wood

OMMENTS ON OPACITY & METER OPERATION _____

Visible Emissions Evaluation Record

Plant Name: Hercules Inc.

Address: West 7th St.

City: Hattiesburg Miss.

Emission Point: 009

Date: 11-2-84

Emission point operation normal ? _____

V. E. Observer: Howard Dumas

Certification Expiration: 4-19-85

Set No.	Time Start	Time End	Opacity Sum	Opacity Average
1	1:45 pm	1:57 pm	915	38.1
2	1:57 pm	1:57 pm	705	29.4
3	1:57 pm	2:03 pm	695	29.0

Overall Average: 32.2

	Initial	Final
Distance to discharge	2 Lengths	
Direction to discharge	N	
Height of observation point	Ground	
Height of discharge	200 ft.	
Plume color	Brown	
Plume background	Gray Sky	
Water vapor in plume ?		
Wind direction (from)	NORTH WEST	
Wind speed	5-10 MPH	
Ambient temperature	64°F	
Discharge temperature		
Sky conditions	Cloudy	

Min.	Seconds 0	15	30	45
0	50	50	30	40
1	40	40	40	40
2	45	40	35	35
3	35	45	40	40
4	40	35	35	30
5	40	30	30	30
6	30	30	30	40
7	35	30	25	25
8	25	25	25	25
9	30	30	30	35
10	35	30	25	25
11	30	30	30	30
12	35	35	25	30
13	30	30	25	30
14	35	35	30	25
15	25	30	25	25
16	30	30	30	25
17	25	25	25	35

Diagram Of Observation/Discharge Point

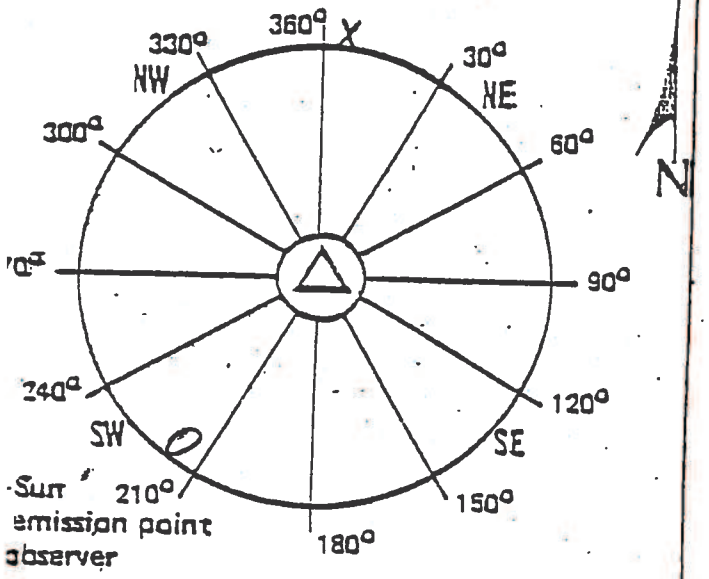

Remarks: _____

Received By: _____

Forest

HERCULES

Hercules Incorporated
West 7th Street
P.O. Box 1937
Hattiesburg, MS 39401
(601) 545-3450

November 16, 1984

Mr. Dwight K. Wylie, P.E. Chief
Air Division
Bureau of Pollution Control
P. O. Box 10385
Jackson, Mississippi 39209

Dear Mr. Wylie:

In reference to operating permit No. 0800-0001, please find the attached monthly report detailing the compliance status of the boilers for emission points 009 and 010.

We will continue to submit this report on a monthly basis.

Very truly yours,

Charles Jordan

Charles Jordan
Environmental Coordinator

CSJ:ml

Attachments

0199Y

HERCULES

Interoffice Memo

Hattiesburg, Mississippi
November 16, 1984

To: C. S. Jordan

From: R. A. VanBeek

OPERATING PERMIT NO. 0800-00001 HATTIESBURG, MS
ISSUED FOR THE OPERATION OF AIR EMISSIONS EQUIPMENT

In reference to the above permit, Part III, Other Requirements, 1-C, the following monthly report is for October 1984.

The report details the compliance status of the boilers with copies of all visible emissions evaluations in which any reading exceeds 40% opacity.

Number of VEE copies attached = 9.

In addition, copies of log sheets are attached for all visible emission evaluations when opacity exceeds 40% for two minutes or more.

R. A. VanBeek

LCP:ml
0138Y

Attachment

ER. 715
RINTED IN U.S.A.

10/11/07

BOILER ROOM ENVIRONMENTAL L[illegible]HEET

Cleaned Fires		7 - 3 Shift	3 - 11 Shift	11 - Shift
No. 1 Boiler	Started	9:00	3:10	10
	Stopped	9:30	6:00	20
No. 2 Boiler	Started	11:15	4:40	33
	Stopped	12:17	7:35	#3
No. 3 Boiler	Started	7:30	3:25	11 -
	Stopped	9:45	4:30	12
No. 4 Boiler	Started			X
	Stopped			

Comments on Boiler Operation

OPACITY EVALUATION - WOOD BURNING BOILERS

BOILER NO. 1			BOILER NO. 2			BOILER NO. 3			BOILER NO. 4		
Time	Duration	Note	Time	Duration	Note	Time	Duration	Note	Time	Duration	Note
			7:04	5-5	1	1:15	1-M	5			

1. Cleaning Bo
2. Fuel Oil Adjustment
3. Load Change
4. Meter Defec
5. Cleaning Me Lenses
6. Wood

OMMENTS ON OPACITY & METER OPERATION

DATE 10-10-04

BOILER ROOM ENVIRONMENTAL LOG SHEET

Cleaned Fires		7 - 3 Shift	3 - 11 Shift	11 Shi
No. 1 Boiler	Started	8.45	4:20	12:
	Stopped	9 30	4:55	1:
No. 2 Boiler	Started	10:00	6:00	1:
	Stopped	11 5-5	7:00	2:
No. 3 Boiler	Started	715	3:10	10:
	Stopped	810	4:00	11:
No. 4 Boiler	Started	X		
	Stopped	X		

Comments on Boiler Operation

OPACITY EVALUATION - WOOD BURNING BOILERS

BOILER NO. 1			BOILER NO. 2			BOILER NO. 3			BOILER NO. 4		
Time	Duration	Note	Time	Duration	Note	Time	Duration	Note	Time	Duration	Note
7:05	1 m	1	1105	1 m	1	730	205	1			
11:25	305	5				3:18	2-5	1			
4:25	2-m	1									

1.Cleaning
2.Fuel Oil Adjustmen
3.Load Chan
4.Meter Def
5.Cleaning Lenses

OMMENTS ON OPACITY & METER OPERATION

DATE 10 - 8 - 84

BOILER ROOM ENVIRONMENTAL LOG SHEET

Cleaned Fires		7 - 3 Shift	3 - 11 Shift	11 - Shift
No. 1 Boiler	Started	845	5:30	12:[illegible]
	Stopped	925	6:15	1:[illegible]
No. 2 Boiler	Started	1050	7:00	2:[illegible]
	Stopped	1145	7:40	3:0[illegible]
No. 3 Boiler	Started	705	4:00	11:0
	Stopped	745	4:55	11:5[illegible]
No. 4 Boiler	Started	X		
	Stopped			

Comments on Boiler Operation

OPACITY EVALUATION - WOOD BURNING BOILERS

BOILER NO. 1			BOILER NO. 2			BOILER NO. 3			BOILER NO. 4		
Time	Duration	Note	Time	Duration	Note	Time	Duration	Note	Time	Duration	Note
			11:05	2-M	1	730	30-S	5			
			10[illegible]58	10-S	3						

1. Cleaning Bo
2. Fuel Oil Adjustment
3. Load Change
4. Meter Defec
5. Cleaning Me Lenses
6. Wood

COMMENTS ON OPACITY & METER OPERATION

DATE 10-2-84

BOILER ROOM ENVIRONMENTAL LOG SHEET

Cleaned Fires		7 - 3 Shift	3 - 11 Shift	11 - Shift
o. 1 Boiler	Started	7:20	3:05	11:1
	Stopped	8:10	3:55	12:0
o. 2 Boiler	Started	8:35	4:55	12:1
	Stopped	9:15	6:05	1:4
o. 3 Boiler	Started	9:55	7:40	2:15
	Stopped	10:50	8:45	3:05
o. 4 Boiler	Started			
	Stopped			

omments on Boiler Operation

OPACITY EVALUATION - WOOD BURNING BOILERS

BOILER NO. 1			BOILER NO. 2			BOILER NO. 3			BOILER NO. 4			
ime	Duration	Note	Time	Duration	Note	Time	Duration	Note	Time	Duration	Note	
			8:47	30-S	1							1.Cleaning Bo
												2.Fuel Oil Adjustment
												3.Load Change
												4.Meter Defec
												5.Cleaning Me Lenses

MENTS ON OPACITY & METER OPERATION

Visible Emissions Evaluation Record

Plant Name: Hercules Inc.

Address: West 7th St.

City: Hibing Miss

Emission Point: 010

Date: 10-2-84

Is emission point operation normal ? _____

V. E. Observer: Bobbie Draughn

Certification Expiration: 10-19-84

Set No.	Time		Opacity	
	Start	End	Sum	Average
1	8'10 Am	8'16 Am	1130	47.1
2	8'16 Am	8'22 Am	1220	50.8
3	8'22 Am	8'28 Am	1065	44.4

Overall Average: 47.4

	Initial	Final
Distance to discharge	2 Lengths	
Direction to discharge	N	
Height of observation point	Ground	
Height of discharge	225 ft.	
Plume color	Gray	
Plume background	Blue Sky	
Water vapor in plume ?		
Wind direction (from)	NE	
Wind speed	5 mph	
Ambient temperature	50°	
Discharge temperature		
Sky conditions	Clear	

Min.	Seconds 0	15	30	45
0	40	40	40	40
1	40	40	40	50
2	50	50	50	50
3	50	50	50	50
4	50	50	50	50
5	50	50	50	50
0	50	50	50	50
1	60	60	50	50
2	50	50	50	50
3	50	50	50	50
4	50	50	50	50
5	50	50	50	50
0	45	45	50	50
1	50	50	40	40
2	40	40	40	40
3	50	50	45	40
4	45	45	50	50
5	45	40	35	40

Diagram Of Observation/Discharge Point

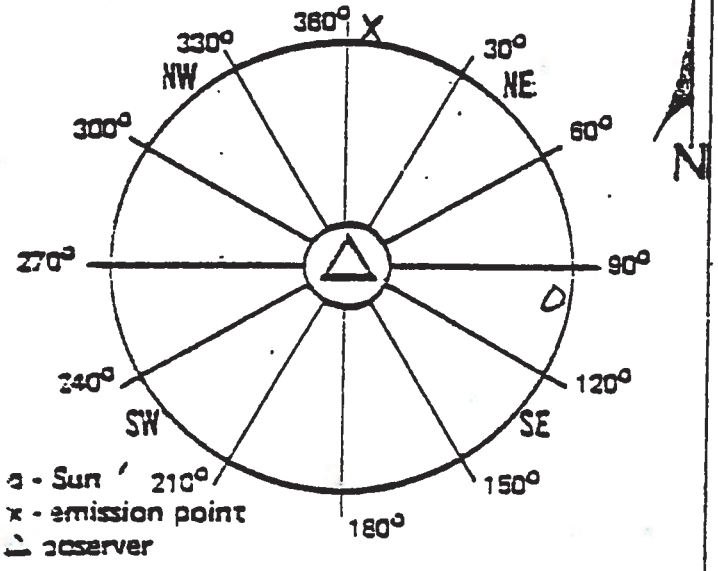

Remarks: _____

Received By: _____

Visible Emissions Evaluation Record

Plant Name: Hercules Inc.

Address: West 7th St.

City: Hattiesburg Miss

Emission Point: 010

Date: 10-8-84

Is emission point operation normal ? _____

V. E. Observer: Bobbie Draughn

Certification Expiration: 10-19-84

Set No.	Time Start	Time End	Opacity Sum	Opacity Average
1	935 Am	941 Am	170	7.1
2	941	947	730	30.4
3	947 Am	953 Am	410	17.1

Overall Average: 18.2

	Initial	Final
Distance to discharge	2 Lengths	
Direction to discharge	N	
Height of observation point	Ground	
Height of discharge	225 ft.	
Plume color	Gray	
Plume background	Gray Sky	
Water vapor in plume ?		
Wind direction (from)	SE	
Wind speed	5 mph	
Ambient temperature	75°	
Discharge temperature		
Sky conditions	Cloudy	

Diagram Of Observation/Discharge Point

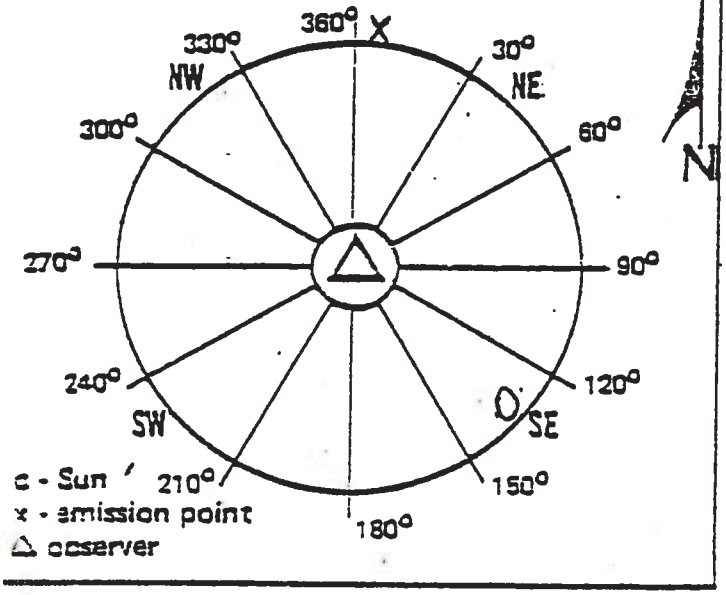

Min.	Seconds 0	15	30	45
0	5	5	5	5
1	10	10	10	5
2	5	5	5	5
3	5	5	5	10
4	10	10	10	10
5	5	5	10	10
0	10	5	10	10
1	10	10	5	5
2	5	5	35	50
3	70	60	50	50
4	50	50	60	50
5	40	30	30	30
0	25	25	20	15
1	10	10	15	20
2	15	15	15	15
3	15	20	20	25
4	20	15	15	20
5	15	15	15	15

Remarks: _____

Received By: _____

Visible Emissions Evaluation Record

Plant Name: Hercules Inc.

Address: West 7th St.

City: Hi Lang Miss.

Emission Point: 009

Date: 10-10-84

Is emission point operation normal ? _____

V. E. Observer: Bobbie Draughn

Certification Expiration: 10-19-84

Set No.	Time Start	Time End	Opacity Sum	Opacity Averag
1	8 45 Am	8 51 Am	1040	43.3
2	8 51	8 57	1230	51.3
3	8 57	9 03 Am	1050	43.8

Overall Average: 46.1

	Initial	Final
Distance to discharge	2 Lengths	
Direction to discharge	N	
Height of observation point	Ground	
Height of discharge	200 ft.	
Plume color	Gray	
Plume background	Gray Sky	
Water vapor in plume ?		
Wind direction (from)	SE	
Wind speed	10 mph	
Ambient temperature	70°	
Discharge temperature		
Sky conditions	Cloudy	

Diagram Of Observation/Discharge Point

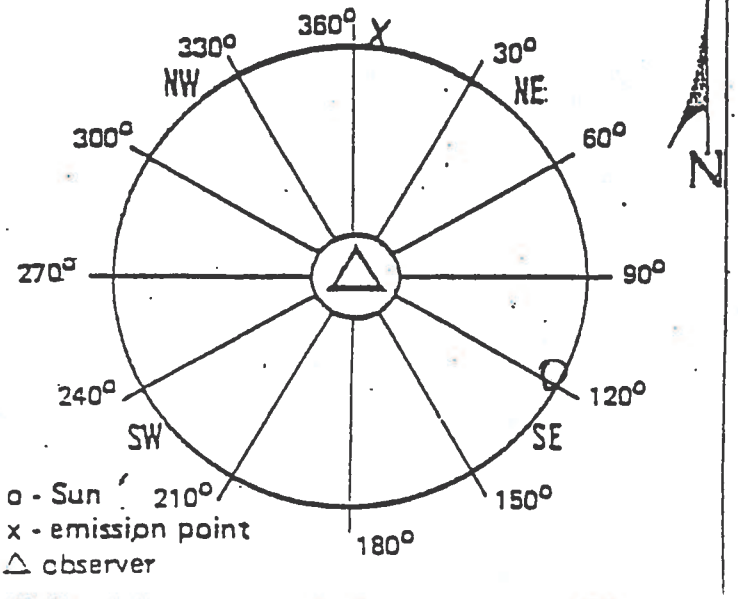

Min.	Seconds 0	15	30	45
0	25	25	25	20
1	25	30	25	20
2	20	25	40	40
3	40	50	50	50
4	50	60	60	80
5	70	70	70	70
0	75	75	70	70
1	40	40	50	50
2	50	50	50	50
3	45	45	45	50
4	50	45	40	40
5	50	50	50	50
0	50	50	50	50
1	55	60	55	60
2	55	55	50	50
3	50	50	45	40
4	40	30	30	25
5	25	25	25	25

Remarks: _____

Received By: _____

Visible Emissions Evaluation Record

Plant Name: Hercules Inc.

Address: West 7th St.

City: Hattiesburg Miss.

Emission Point: 009

Date: 10-17-84

Is emission point operation normal ? _____

V. E. Observer: Bobbie Draughon

Certification Expiration: 10-19-84

Set No.	Time Start	Time End	Opacity Sum	Opacity Average
1	1:20 pm	1:26 pm	800	33.3
2	1:26 pm	1:32	885	36.9
3	1:32	1:38 pm	1095	45.6

Overall Average: 38.6

	Initial	Final
Distance to discharge	2 Lengths	
Direction to discharge	N	
Height of observation point	Ground	
Height of discharge	200 ft.	
Plume color	Gray	
Plume background	Gray Sky	
Water vapor in plume ?		
Wind direction (from)	SW	
Wind speed	10 mph	
Ambient temperature	80°	
Discharge temperature		
Sky conditions	Cloudy	

Min.	Seconds 0	15	30	45
0	30	30	30	30
1	35	40	30	30
2	30	30	30	30
3	30	30	30	40
4	40	40	40	40
5	30	35	35	35
0	35	40	40	40
1	40	40	35	35
2	35	35	35	35
3	30	30	35	35
4	40	40	40	40
5	40	40	40	30
0	35	35	40	40
1	40	40	50	50
2	50	40	40	35
3	40	50	50	50
4	50	50	50	50
5	50	60	50	50

Diagram Of Observation/Discharge Point

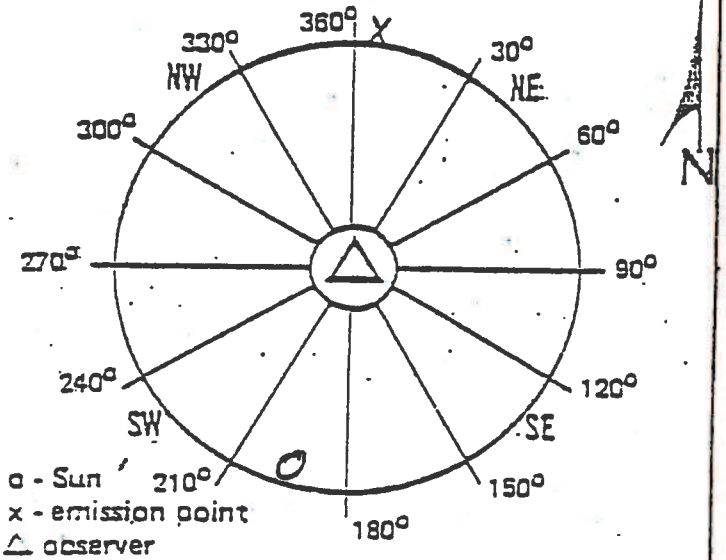

Remarks: _____

Received By: _____

Visible Emissions Evaluation Record

Plant Name: Hercules Inc.

Address: West 7th St.

City: Hilbing Miss.

Emission Point: 009

Date: 10-3-84

Is emission point operation normal ? _____

V. E. Observer: Bobbie Draughon

Certification Expiration: 10-19-84

Set No.	Time		Opacity	
	Start	End	Sum	Average
1	11°° Am	11 07	525	21.9
2	11 07	11 13	575	24.0
3	11 13	11 17 Am	905	37.7

Overall Average: 27.9

	Initial	Final
Distance to discharge	2 Lengths	
Direction to discharge	N	
Height of observation point	Ground	
Height of discharge	200 ft.	
Plume color	Gray	
Plume background	Blue Sky	
Water vapor in plume ?		
Wind direction (from)	N	
Wind speed	5-10 mph	
Ambient temperature	70°	
Discharge temperature		
Sky conditions	Clear	

Diagram Of Observation/Discharge Point

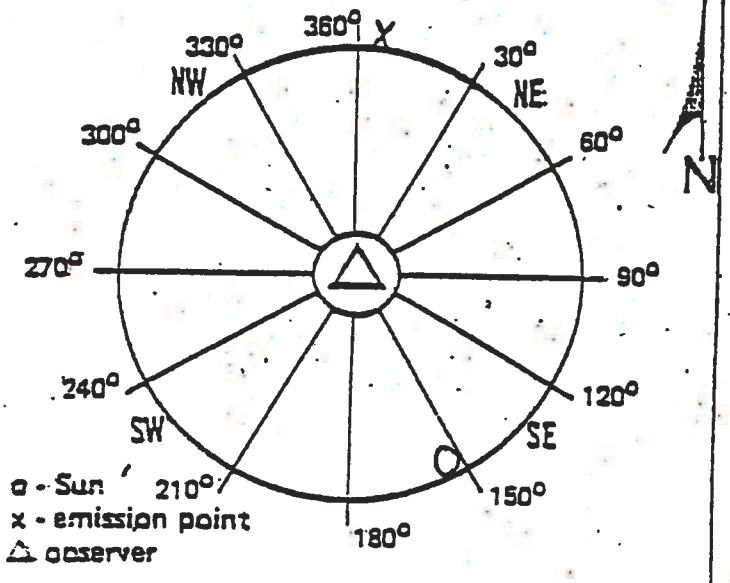

Min.	Seconds 0	15	30	45
0	15	15	15	15
1	20	20	20	20
2	15	15	15	15
3	20	15	15	20
4	15	15	15	15
5	60	60	50	25
0	20	15	15	15
1	25	50	60	60
2	40	15	10	10
3	10	10	15	15
4	15	15	20	30
5	30	30	25	25
0	25	30	30	40
1	40	40	50	50
2	45	50	50	50
3	50	40	40	40
4	55	30	25	25
5	25	25	25	25

Remarks: _____

Received By: _____

Visible Emissions Evaluation Reco

Plant Name: Hercules Inc.

Address: West 7th St.

City: Hi'Lang Miss.

Emission Point: 009

Date: 10-4-84

Is emission point operation normal ? _____

V. E. Observer: Bobbie Draughon

Certification Expiration: 10-19-84

Set No.	Time		Opacity	
	Start	End	Sum	Average
1	1 02 pm	1 05 pm	425	17.7
2	1 08	1 14	810	33.8
3	1 14	1 20 pm	480	20.0

Overall Average: 23.8

	Initial	Final
Distance to discharge	2 Lengths	
Direction to discharge	N	
Height of observation point	Ground	
Height of discharge	200 ft.	
Plume color	Gray	
Plume background	Gray Sky	
Water vapor in plume ?		
Wind direction (from)	E	
Wind speed	10-15 mph	
Ambient temperature	78°	
Discharge temperature		
Sky conditions	Pc.	

Diagram Of Observation/Discharge Point

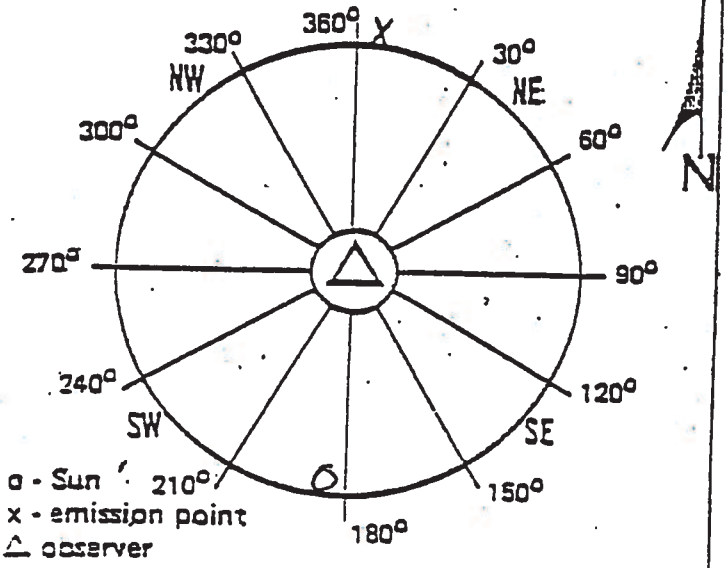

Min.	Seconds 0	15	30	45
0	20	20	20	20
1	20	15	15	15
2	15	15	15	20
3	20	20	10	20
4	20	30	20	15
5	15	15	15	15
0	15	15	10	10
1	15	15	40	60
2	50	40	40	50
3	50	30	50	60
4	60	20	20	20
5	40	40	30	30
0	30	40	30	15
1	10	15	15	20
2	30	30	35	35
3	25	25	20	15
4	10	10	10	10
5	10	10	15	15

Remarks: _____

Received By: _____

Visible Emissions Evaluation Record

Plant Name: Hercules Inc.

Address: West 7th St.

City: Hattiesburg Miss

Emission Point: 010

Date: 10-15-84

Is emission point operation normal ? _____

V. E. Observer: Bobbie Draughn

Certification Expiration: 10-19-84

Set No.	Time Start	Time End	Opacity Sum	Opacity Average
1	9:40 Am	9:46 Am	405	16.9
2	9:46	9:52	215	9.0
3	9:52 Am	9:58 Am	145	6.0

Overall Average: 10.6

	Initial	Final
Distance to discharge	2 Lengths	
Direction to discharge	N	
Height of observation point	Ground	
Height of discharge	225 ft.	
Plume color	Gray	
Plume background	Blue Sky	
Water vapor in plume ?		
Wind direction (from)	SW	
Wind speed	10 mph	
Ambient temperature	76°	
Discharge temperature		
Sky conditions	PC	

Min.	Seconds 0	15	30	45
0	20	30	30	30
1	90	70	20	10
2	10	10	5	5
3	5	5	5	10
4	10	5	10	5
5	5	5	5	5
0	5	5	5	5
1	5	15	10	5
2	10	5	5	10
3	5	10	10	10
4	5	20	10	30
5	5	5	10	10
0	5	5	5	10
1	5	5	5	5
2	5	5	10	5
3	5	10	5	5
4	5	10	10	5
5	5	5	5	5

Diagram Of Observation/Discharge Point

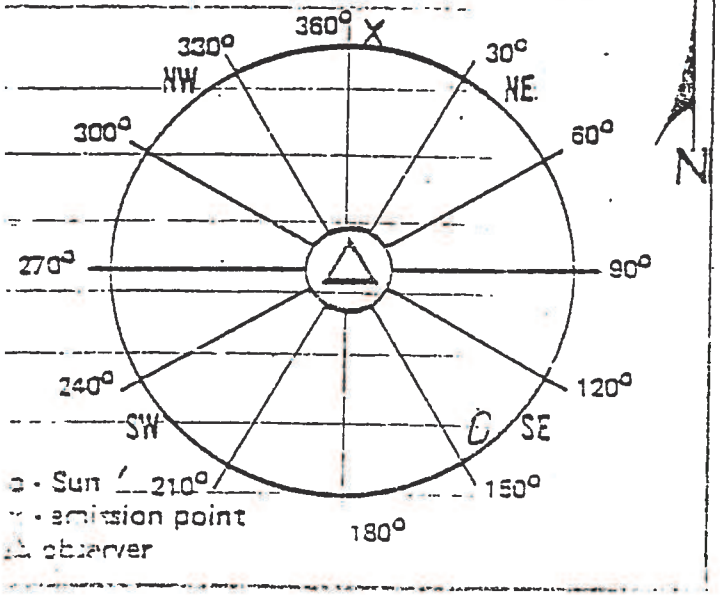

Remarks: _____

Received By: _____

Visible Emissions Evaluation Record

Plant Name: Hercules Inc.

Address: West 7th St.

City: Hattiesburg Miss.

Emission Point: 009

Date: 10-30-84

Is emission point operation normal ? _____

V. E. Observer: Bobbie Draughn

Certification Expiration: 10-19-84

Set No.	Time Start	Time End	Opacity Sum	Opacity Average
1	11 55 Am	12 0 pm	705	29.4
2	12 0 pm	12 07	295	12.3
3	12 07 pm	12 13 pm	165	6.9

Overall Average: 16.2

	Initial	Final
Distance to discharge	2 Lengths	
Direction to discharge	N	
Height of observation point	Ground	
Height of discharge	200 ft.	
Plume color	Gray	
Plume background	Gray Sky	
Water vapor in plume ?		
Wind direction (from)	E	
Wind speed	5-10 mph	
Ambient temperature	83°	
Discharge temperature		
Sky conditions	Pc	

Min.	Seconds 0	15	30	45
0	40	40	30	30
1	30	30	30	40
2	50	60	60	50
3	40	30	20	10
4	15	10	10	20
5	15	15	15	15
0	15	15	15	15
1	15	15	20	20
2	20	15	15	10
3	10	10	10	10
4	10	10	10	10
5	10	5	5	5
0	5	5	10	5
1	5	5	5	5
2	5	5	10	10
3	10	5	5	5
4	5	10	5	10
5	10	10	5	10

Diagram Of Observation/Discharge Point

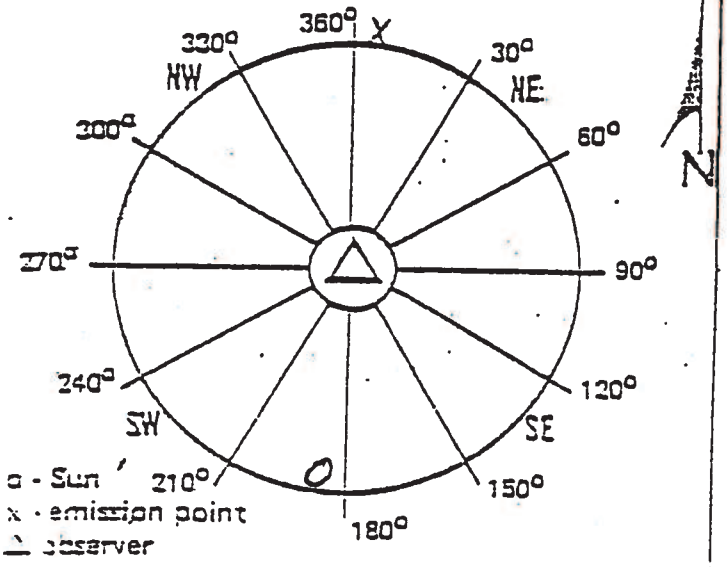

Remarks: _____

Received By: _____

Visible Emissions Evaluation Record

Plant Name: Hercules Inc.

Address: West 7th St.

City: Hollandale Miss.

Emission Point: 009

Date: 10-12-84

Is emission point operation normal?

V. E. Observer: Bobbie Donaughey

Certification Expiration: 10-19-84

	Initial	Final
Distance to discharge	2 Lengths	
Direction to discharge	N	
Height of observation point	Ground	
Height of discharge	200 ft.	
Plume color	Gray	
Plume background	Blue	
Water vapor in plume?		
Wind direction (from)	East	
Wind speed	5-10 MPH	
Ambient temperature	82°F	
Discharge temperature		
Sky conditions	Clear	

Set No.	Time Start	Time End	Opacity Sum	Opacity Average
1	12.02	12.08	630	26.3
2	12.08	12.14	745	35.2
3	12.14	12.20	765	31.9

Overall Average: 31-1

Min.	Seconds 0	15	30	45
0	20	20	20	25
1	25	30	30	30
2	25	25	30	35
3	35	30	30	30
4	25	20	20	20
5	20	25	25	35
0	30	30	25	25
1	35	35	30	35
2	40	45	45	45
3	45	55	50	40
4	25	20	25	30
5	35	40	35	25
0	30	30	35	25
1	20	20	25	30
2	30	30	35	40
3	30	40	50	50
4	45	50	40	30
5	25	25	20	20

Diagram Of Observation/Discharge Point

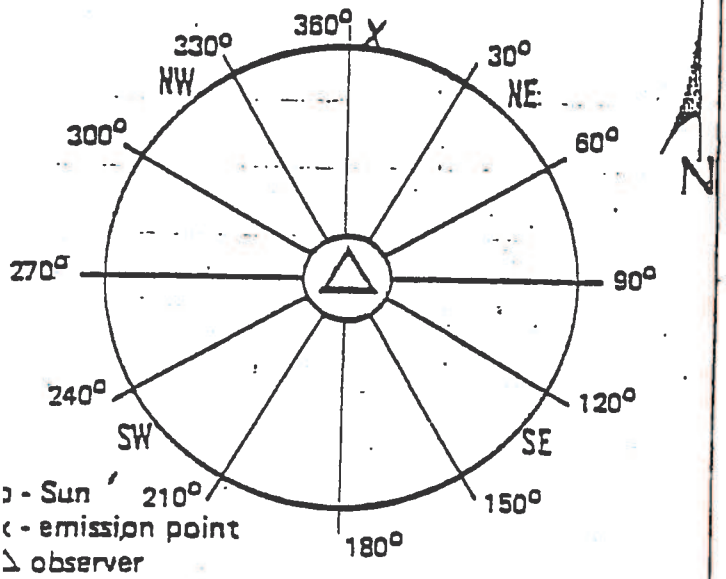

Remarks:

Received By:

Forrest

HERCULES

Hercules Incorporated
West 7th Street
P.O. Box 1937
Hattiesburg, MS 39401
(601) 545-3450

October 10, 1984

Mr. Dwight K. Wylie, P. E. Chief
Air Division
Bureau of Pollution Control
P. O. Box 10385
Jackson, Mississippi 39209

Dear Mr. Wylie:

In reference to operating permit No. 0800-0001, please find the attached monthly report detailing the compliance status of the boilers for emission points 009 and 010.

We will continue to submit this report on a monthly basis.

Very truly yours,

Charles Jordan

Charles Jordan
Environmental Supervisor

CSJ:sw

Attachments

HERCULES

Interoffice Memo

Hattiesburg, Mississippi
October 9, 1984

To: C. S. Jordan

From: L. C. Polk

OPERATING PERMIT NO. 0800-00001 HATTIESBURG, MS
ISSUED FOR THE OPERATION OF AIR EMISSIONS EQUIPMENT

In reference to the above permit, Part III, Other Requirements, 1-C, the following monthly report is for September 1984.

The report details the compliance status of the boilers with copies of all visible emissions evaluations in which any reading exceeds 40% opacity.

Number of VEE copies attached = 9.

In addition, copies of log sheets are attached for all visible emission evaluations when opacity exceeds 40% for two minutes or more.

L. C. Polk

LCP:ml
0138Y

Attachment

HER. 715
PRINTED IN U.S.A.

Visible Emissions Evaluation Record

Plant Name: Hercules Inc.

Address: West 7th St.

City: Hattiesburg Miss.

Emission Point: 009

Date: 9-4-84

Is emission point operation normal ? _____

V. E. Observer: Bobbie Draughn

Certification Expiration: 10-19-84

Set No.	Time		Opacity	
	Start	End	Sum	Average
1	10 30 Am	10 36 Am	700	29.2
2	10 36	10 42	210	8.8
3	10 42	10 48 Am	365	15.2

Overall Average: 17.7

	Initial	Final
Distance to discharge	2 Lengths	
Direction to discharge	N	
Height of observation point	Ground	
Height of discharge	200 ft.	
Plume color	Gray	
Plume background	Gray Sky	
Water vapor in plume ?		
Wind direction (from)	NW	
Wind speed	5-10	
Ambient temperature	77°	
Discharge temperature		
Sky conditions	Cloudy	

Min.	Seconds 0	15	30	45
0	40	40	40	40
1	50	50	55	55
2	50	50	40	30
3	20	20	15	15
4	10	15	15	10
5	10	10	10	10
0	10	5	5	5
1	5	10	5	5
2	10	10	10	10
3	10	10	10	10
4	10	10	10	10
5	10	10	10	10
0	10	10	10	10
1	10	10	10	10
2	10	15	20	30
3	25	20	20	20
4	20	15	15	15
5	15	15	15	15

Diagram Of Observation/Discharge Point

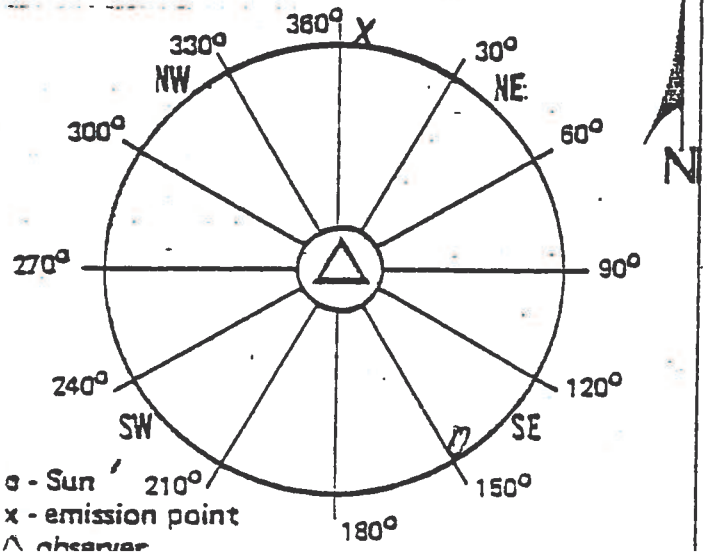

Remarks: _____

Visible Emissions Evaluation Record

ant Name: Hercules Inc.

ddress: West 7th St.

ty: Hattiesburg Miss.

nission Point: 009

ite: 9-5-84

emission point operation normal ? _____

V. E. Observer: Bobbie Draughn

Certification Expiration: 10-19-84

Set No.	Time		Opacity	
	Start	End	Sum	Average
1	12⁰⁸ Pm	12¹⁴ Pm	690	28.8
2	12¹⁴	12²⁰	775	32.3
3	12²⁰	12²⁶ Pm	915	38.1

Overall Average: 33.1

	Initial	Final
stance to discharge	2 Lengths	
rection to discharge	N	
ight of observation point	Ground	
ight of discharge	200 ft.	
ume color	Gray	
ume background	Blue Sky	
ter vapor in plume ?		
nd direction (from)	N	
nd speed	10-15 mph	
nbient temperature	77°	
scharge temperature		
y conditions	Clear	

Min.	Seconds 0	15	30	45
0	20	20	25	25
1	30	30	30	30
2	30	30	30	30
3	30	30	30	30
4	30	30	30	30
5	30	30	30	30
0	35	35	35	35
1	35	35	30	30
2	30	30	30	30
3	30	30	35	35
4	30	30	30	30
5	30	35	35	35
0	30	30	30	30
1	30	30	30	35
2	40	40	40	40
3	40	50	50	40
4	45	45	40	40
5	40	40	40	40

Remarks: _____

iagram Of Observation/Discharge Point

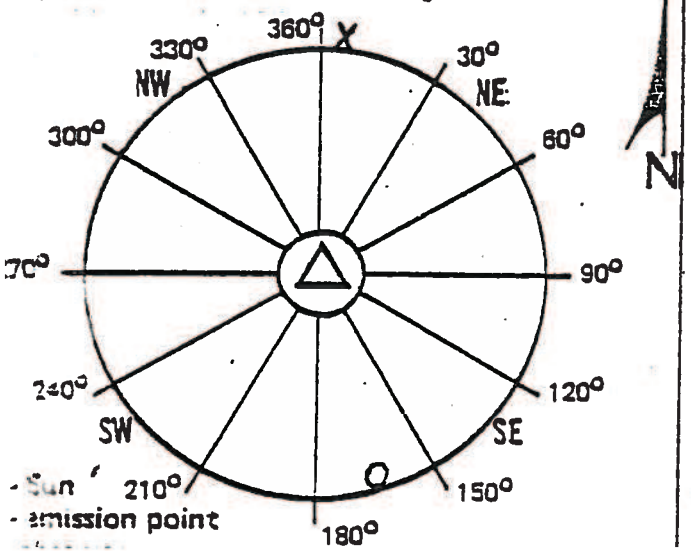

Visible Emissions Evaluation Record

ant Name: Hercules Inc.

ldress: West 7th St.

ty: Hattiesburg Miss

nission Point: 010

te: 9-7-84

emission point operation normal ? _____

	Initial	Final
stance to discharge	2 Lengths	
rection to discharge	N	
ight of observation point	Ground	
ight of discharge	225 ft.	
ume color	Gray	
ume background	Blue Sky	
ter vapor in plume ?		
nd direction (from)	E	
nd speed	5 mph	
nbient temperature	70°	
scharge temperature		
y conditions	Clear	

Diagram Of Observation/Discharge Point

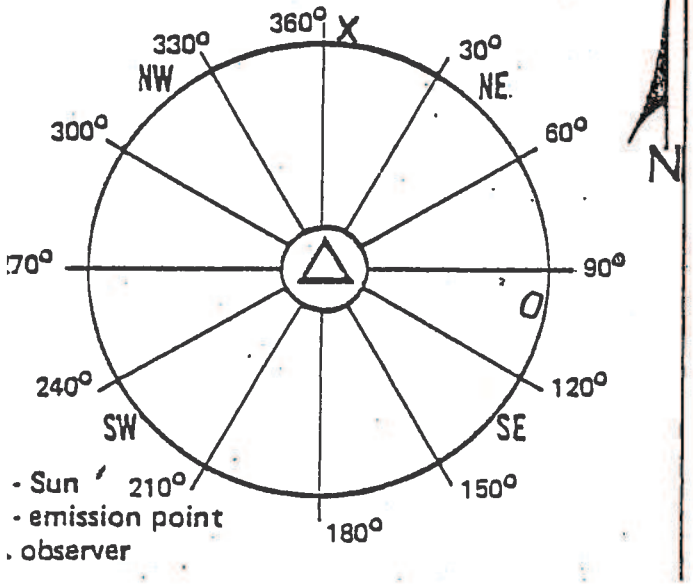

V. E. Observer: Bobbie Draughn

Certification Expiration: 10-19-84

Set No.	Time Start	Time End	Opacity Sum	Opacity Average
1	8^06 Am	8^12 Am	385	16.0
2	8^12	8^18	605	25.2
3	8^18	8^24 Am	260	10.8

Overall Average: 17.3

Min.	Seconds 0	15	30	45
0	20	20	20	20
1	20	20	20	20
2	15	15	15	15
3	15	15	15	15
4	15	15	10	15
5	15	15	10	10
0	15	15	15	25
1	25	25	25	15
2	15	10	10	10
3	15	15	15	15
4	20	30	30	30
5	40	60	60	70
0	50	10	10	10
1	10	15	15	25
2	20	15	10	5
3	5	5	10	5
4	5	5	5	5
5	5	5	5	5

Remarks: _____

Visible Emissions Evaluation Rec

Plant Name: Hercules Inc.

Address: West 7th St.

City: Hattiesburg Miss.

Emission Point: 009

Date: 9-13-84

Is emission point operation normal ? _____

V. E. Observer: Bobbie Draughn

Certification Expiration: 10-19-84

Set No.	Time Start	Time End	Opacity Sum	Opacity Average
1	9 55 Am	10 01 Am	425	17.7
2	10 01	10 07	330	13.8
3	10 07 Am	10 13 Am	1100	45.8

Overall Average: 25.8

	Initial	Final
Distance to discharge	2 Lengths	
Direction to discharge	N	
Height of observation point	Ground	
Height of discharge	200 ft.	
Plume color	Gray	
Plume background	Gray Sky	
Water vapor in plume ?		
Wind direction (from)	SE	
Wind speed	5 mph	
Ambient temperature	86°	
Discharge temperature		
Sky conditions	Pc	

Diagram Of Observation/Discharge Point

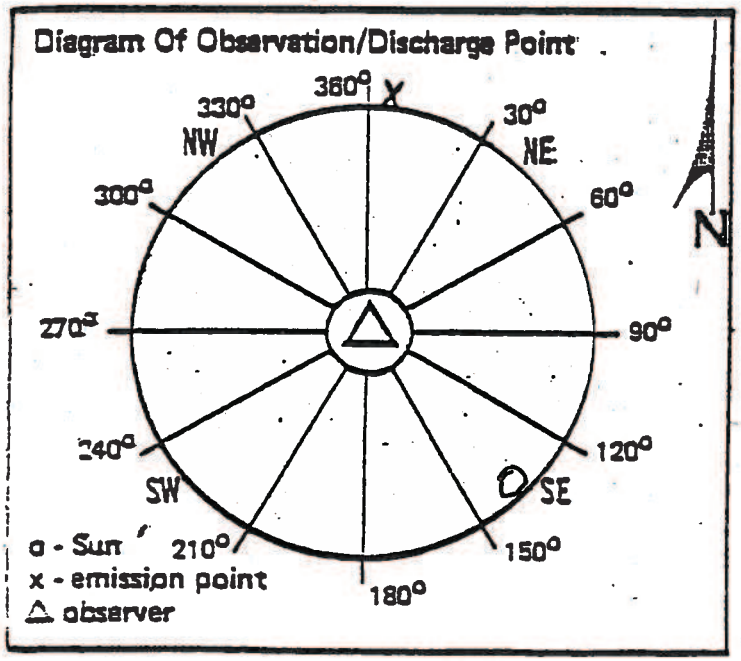

Min.	Seconds 0	15	30	45
0	10	10	15	15
1	15	15	10	10
2	10	15	15	20
3	20	20	20	20
4	20	25	25	25
5	25	25	20	20
0	20	20	20	20
1	20	20	15	15
2	10	10	10	10
3	15	15	15	15
4	10	10	10	10
5	10	10	10	10
0	10	10	5	5
1	5	5	5	5
2	10	20	20	40
3	40	50	50	50
4	80	90	100	100
5	100	100	100	100

Remarks: _____

Received By: _____

Visible Emissions Evaluation Rec

Plant Name: Hercules Inc.

Address: West 7th St.

City: Hattiesburg Miss

Emission Point: 010

Date: 9-19-84

Is emission point operation normal ? _____

V. E. Observer: Bobbie Draughn

Certification Expiration: 10-19-84

Set No.	Time Start	Time End	Opacity Sum	Opacity Avera
1	1 10 pm	1 16 pm	340	14.2
2	1 16 pm	1 22 pm	1130	47.1
3	1 22 pm	1 28 pm	300	12.5

Overall Average: 24.6

	Initial	Final
Distance to discharge	2 Lengths	
Direction to discharge	N	
Height of observation point	Ground	
Height of discharge	225 ft.	
Plume color	Gray	
Plume background	Blue Sky	
Water vapor in plume ?		
Wind direction (from)	E	
Wind speed	15-20 mph	
Ambient temperature	82°	
Discharge temperature		
Sky conditions	Pc	

Min.	Seconds 0	15	30	45
0	10	10	15	15
1	15	15	15	15
2	15	15	15	15
3	15	15	15	15
4	15	15	15	15
5	10	10	15	15
0	15	15	20	20
1	20	25	40	60
2	60	50	60	50
3	50	30	25	30
4	40	70	70	90
5	70	80	70	70
0	60	50	20	20
1	10	10	10	5
2	10	15	15	10
3	10	5	5	5
4	5	5	5	5
5	5	5	5	5

Diagram Of Observation/Discharge Point

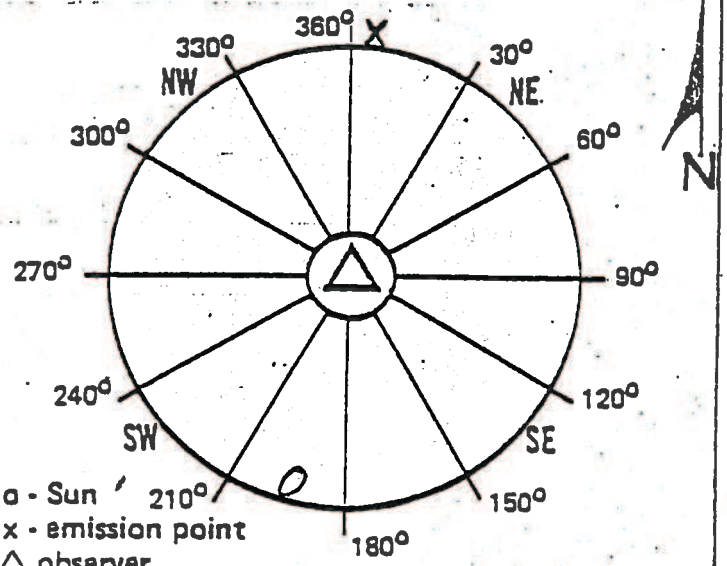

Remarks: _____

Visible Emissions Evaluation Record

Plant Name: Hercules Inc.

Address: West 7th St.

City: Hattiesburg Miss.

Emission Point: 009

Date: 9-20-84

Is emission point operation normal ? _____

V. E. Observer: Bobbie Draughon

Certification Expiration: 10-19-84

Set No.	Time		Opacity	
	Start	End	Sum	Averag
1	10 13 AM	10 19	935	39.(
2	10 19	10 25	680	28.3
3	10 25	10 31 AM	1665	69.4

Overall Average: 45.6

	Initial	Final
Distance to discharge	2 Lengths	
Direction to discharge	N	
Height of observation point	Ground	
Height of discharge	200 ft.	
Plume color	Gray	
Plume background	Blue Sky	
Water vapor in plume ?		
Wind direction (from)	E	
Wind speed	15 mph	
Ambient temperature	78°	
Discharge temperature		
Sky conditions	Clear	

Diagram Of Observation/Discharge Point

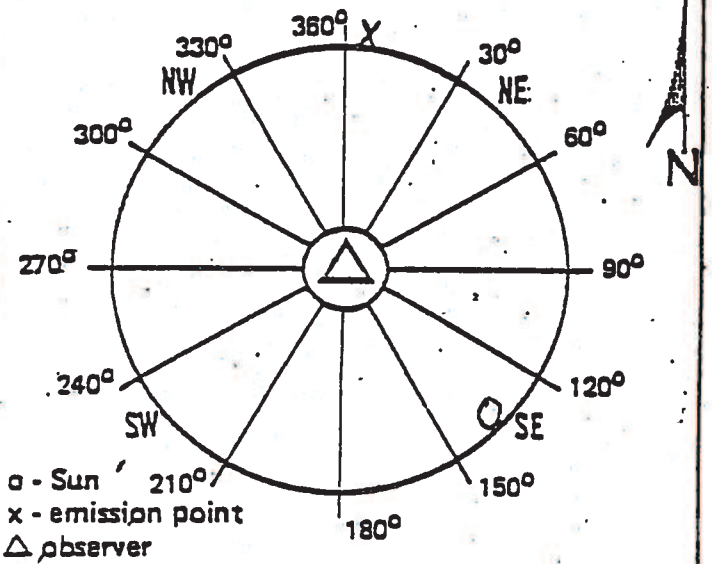

Min.	Seconds 0	15	30	45
0	40	40	40	40
1	40	40	40	40
2	40	40	40	40
3	40	40	40	40
4	40	40	40	40
5	40	40	30	25
0	25	25	30	35
1	30	30	30	30
2	30	30	25	25
3	25	25	25	25
4	25	25	25	25
5	25	30	30	50
0	70	60	60	70
1	60	60	70	50
2	60	55	55	60
3	60	70	90	90
4	90	80	80	80
5	75	75	75	70

Remarks: _____

Received By: _____

Visible Emissions Evaluation Recor

Plant Name: Hercules Inc.

Address: West 7th St.

City: H'burg Miss

Emission Point: 010

Date: 9-24-84

Is emission point operation normal ? _____

V. E. Observer: Bobbie Draughn

Certification Expiration: 10-19-84

Set No.	Time		Opacity	
	Start	End	Sum	Average
1	1 05 pm	1 11 pm	120	5.0
2	1 11 pm	1 17 pm	435	18.1
3	1 17 pm	1 23 pm	285	11.9

Overall Average: 11.7

	Initial	Final
Distance to discharge	2 Lengths	
Direction to discharge	N	
Height of observation point	Ground	
Height of discharge	225 ft.	
Plume color	Gray	
Plume background	Blue Sky	
Water vapor in plume ?		
Wind direction (from)	SE	
Wind speed	10 mph	
Ambient temperature	88°	
Discharge temperature		
Sky conditions	PC	

Min.	Seconds 0	15	30	45
0	5	5	5	5
1	5	5	5	5
2	5	5	5	5
3	5	5	5	5
4	5	5	5	5
5	5	5	5	5
0	5	5	5	5
1	5	5	5	5
2	5	5	10	5
3	15	30	50	40
4	30	20	25	20
5	25	35	40	40
0	30	25	25	15
1	15	10	10	5
2	5	5	10	10
3	10	15	15	15
4	10	10	10	10
5	10	5	5	5

Diagram Of Observation/Discharge Point

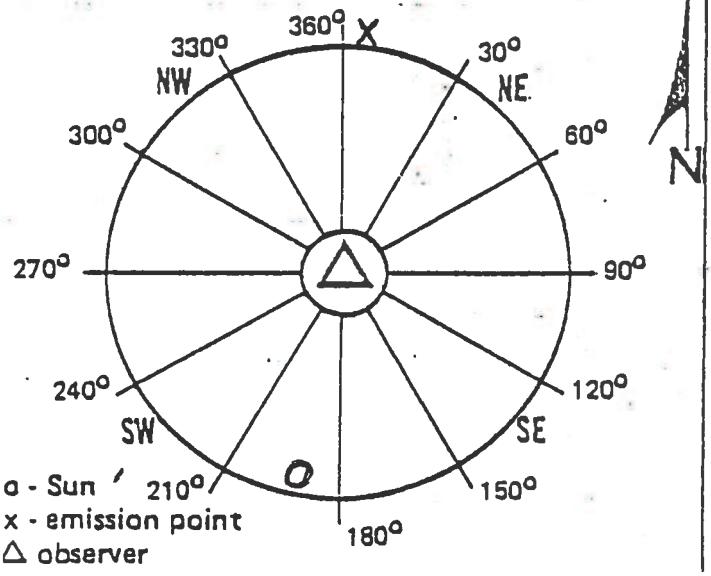

Remarks: _____

Visible Emissions Evaluation Record

Plant Name: Hercules Inc.

Address: West 7th St.

City: Hi Long Miss.

Emission Point: 009

Date: 9-24-84

Is emission point operation normal ? _____

V. E. Observer: Bobbie Draughn

Certification Expiration: 10-19-84

Set No.	Time		Opacity	
	Start	End	Sum	Average
1	1 05 pm	1 11 pm	160	6.7
2	1 11 pm	1 17	265	11.0
3	1 17 pm	1 23 pm	940	39.2

Overall Average: 19.0

	Initial	Final
Distance to discharge	2 Lengths	
Direction to discharge	N	
Height of observation point	Ground	
Height of discharge	200 ft.	
Plume color	Gray	
Plume background	Blue Sky	
Water vapor in plume ?		
Wind direction (from)	SE	
Wind speed	10 mph	
Ambient temperature	88°	
Discharge temperature		
Sky conditions	Pc	

Diagram Of Observation/Discharge Point

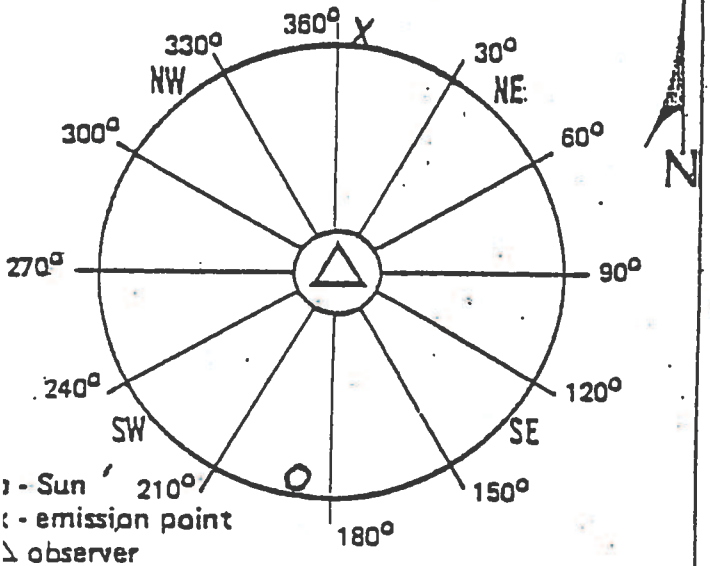

Min.	Seconds 0	15	30	45
0	10	10	10	10
1	10	10	10	10
2	5	5	5	5
3	5	5	5	5
4	5	5	5	5
5	5	5	5	5
6	5	5	5	5
7	5	5	5	5
8	5	5	5	5
9	5	5	30	20
10	20	15	15	15
11	20	20	20	20
12	40	50	60	60
13	60	50	40	50
14	50	50	40	40
15	30	25	25	25
16	35	35	35	35
17	30	30	30	15

Remarks: _____

Received By: _____

Visible Emissions Evaluation Record

Plant Name: Hercules Inc.

Address: West 7th St.

City: Hollandale Miss.

Emission Point: 009

Date: 9-28-84

Is emission point operation normal ? _____

V. E. Observer: Bobbie Dianghon

Certification Expiration: 10-19-84

Set No.	Time		Opacity	
	Start	End	Sum	Average
1	8 40 Am	8 46	495	20.6
2	8 46	8 52	545	22.7
3	8 52	8 58 Am	585	24.4

Overall Average: 22.6

	Initial	Final
Distance to discharge	2 Lengths	
Direction to discharge	N	
Height of observation point	Ground	
Height of discharge	200 ft.	
Plume color	Gray	
Plume background	Gray Sky	
Water vapor in plume ?		
Wind direction (from)	NW	
Wind speed	10 mph	
Ambient temperature	65°	
Discharge temperature		
Sky conditions	PC	

	Seconds			
Min.	0	15	30	45
0	25	10	5	5
1	5	5	60	100
2	100	70	30	10
3	5	5	5	5
4	5	5	5	5
5	5	5	5	15
0	10	10	50	70
1	80	50	25	15
2	5	5	5	5
3	5	5	5	5
4	15	30	50	50
5	20	10	10	10
0	10	5	5	5
1	10	10	70	80
2	70	25	5	5
3	30	40	40	20
4	15	10	10	10
5	10	40	30	30

Diagram Of Observation/Discharge Point

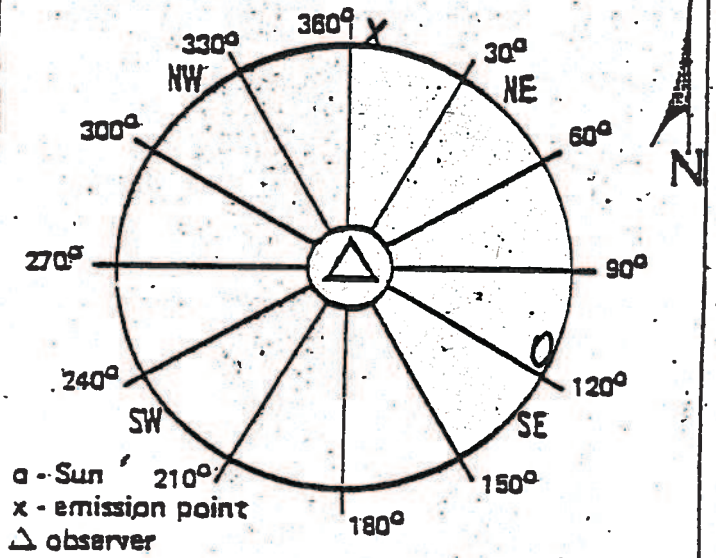

Remarks: _____

Received By: _____

DATE 9-13-84

BOILER ROOM ENVIRONMENTAL LOG SHEET

CIeaned Fires		7 - 3 Shift	3 - 11 Shift	11 - 7 Shift
No. 1 Boiler	Started	7:40	4:15	12:10
	Stopped	8:15	5:05	1:00
No. 2 Boiler	Started	10:20	6:00	2:30
	Stopped	10:50	6:50	3:10
No. 3 Boiler	Started	7:00	3:00	10:45
	Stopped	7:40	3:50	11:35
No. 4 Boiler	Started			
	Stopped			

Comments on Boiler Operation

OPACITY EVALUATION - WOOD BURNING BOILERS

BOILER NO. 1			BOILER NO. 2			BOILER NO. 3			BOILER NO. 4			
Time	Duration	Note	Time	Duration	Note	Time	Duration	Note	Time	Duration	Note	1.Cleaning Boile
						11:10	30-S	1				2.Fuel Oil Adjustment
												3.Load Changes
												4.Meter Defect
												5.Cleaning Meter Lenses
												6. Wood

COMMENTS ON OPACITY & METER OPERATION

DATE 9-19-84

BOILER ROOM ENVIRONMENTAL LOG SHEET

Cleaned Fires		7 - 3 Shift	3 - 11 Shift	11 - 7 Shift
No. 1 Boiler	Started	8:30	6:30	1110
	Stopped	9:15	7:20	200
No. 2 Boiler	Started	11:00	8:10	215
	Stopped	11:50	8:55	315
No. 3 Boiler	Started	2:00	5:00	1115
	Stopped	8:05	5:50	1210
No. 4 Boiler	Started			X
	Stopped			

Comments on Boiler Operation

OPACITY EVALUATION - WOOD BURNING BOILERS

BOILER NO. 1			BOILER NO. 2			BOILER NO. 3			BOILER NO. 4			
Time	Duration	Note	Time	Duration	Note	Time	Duration	Note	Time	Duration	Note	1.Cleaning Boil
7:30	10-S	1	8:32	5-S	1	2:15	3-S	1				2.Fuel Oil Adjustment
1:02	20-S	1	12:55	20-S	2	5:25	15-S	3				3.Load Changes
						7:28	10-S	3				4.Meter Defect
												5.Cleaning Meter Lenses

COMMENTS ON OPACITY & METER OPERATION

DATE 4-20-84

BOILER ROOM ENVIRONMENTAL L[illegible] SHEET

Cleaned Fires		7 - 3 Shift	3 - 11 Shift	11 - Shift
No. 1 Boiler	Started	7:51	3:30	1230
	Stopped	8:20		115
No. 2 Boiler	Started	10:15	6:45	200
	Stopped	10:45	2:48	305
No. 3 Boiler	Started	7:00	2:30	111[illegible]
	Stopped	7:50	3:15	120[illegible]
No. 4 Boiler	Started	—		X
	Stopped	—		

Comments on Boiler Operation

OPACITY EVALUATION - WOOD BURNING BOILERS

BOILER NO. 1			BOILER NO. 2			BOILER NO. 3			BOILER NO. 4			
Time	Duration	Note	Time	Duration	Note	Time	Duration	Note	Time	Duration	Note	1.Cleaning B[illegible]
			815	35 sec	3							2.Fuel Oil Adjustment
11:20	30 S	2	1130	20-S	2							3.Load Chang[illegible]
12:50	30 S	1										4.Meter Defe[illegible]
												5.Cleaning M[illegible] Lenses
												6. Wood

COMMENTS ON OPACITY & METER OPERATION

DATE 9-24-84

BOILER ROOM ENVIRONMENTAL LOG SHEET

Cleaned Fires		7 - 3 Shift	3 - 11 Shift	11 - 7 Shift
No. 1 Boiler	Started	8:30	4:30	10:50
	Stopped	9:35	5:15	11:45
No. 2 Boiler	Started	10:40	6:00	100
	Stopped	11:20	6:50	145
No. 3 Boiler	Started	[illegible]	3:20	X
	Stopped	7:30	4:15	
No. 4 Boiler	Started			
	Stopped			

Comments on Boiler Operation

OPACITY EVALUATION - WOOD BURNING BOILERS

BOILER NO. 1			BOILER NO. 2			BOILER NO. 3			BOILER NO. 4			
Time	Duration	Note	Time	Duration	Note	Time	Duration	Note	Time	Duration	Note	1. Cleaning Boile
8:40p	3 min.	(1)										2. Fuel Oil Adjustment
12:20	1 min.	(3)										3. Load Changes
6:12	1-m	3										4. Meter Defect
												5. Cleaning Meter Lenses
												6. Wood

COMMENTS ON OPACITY & METER OPERATION

Hercules Incorporated
West 7th Street
P.O. Box 1937
Hattiesburg, MS 39401
(601) 545-3450

September 12, 1984

Mr. Dwight K. Wylie, P.E. Chief
Air Division
Bureau of Pollution Control
P. O. Box 10385
Jackson, Mississippi 39209

Dear Mr. Wylie:

In reference to operating permit No. 0800-0001, please find the attached monthly report detailing the compliance status of the boilers for emission points 009 and 010.

We will continue to submit this report on a monthly basis.

Very truly yours,

Charles Jordan

Charles Jordan
Environmental Supervisor

CSJ:bs

Attachments

HERCULES

Interoffice Memo

Hattiesburg, Mississippi
September 6, 1984

To: C. S. Jordan

From: L. C. Polk

OPERATING PERMIT NO. 0800-00001 HATTIESBURG, MS
ISSUED FOR THE OPERATION OF AIR EMISSIONS EQUIPMENT

In reference to the above permit, Part III, Other Requirements, 1-C, the following monthly report is for August 1984.

The report details the compliance status of the boilers with copies of all visible emissions evaluations in which any reading exceeds 40% opacity.

Number of VEE copies attached = 9.

In addition, copies of log sheets are attached for all visible emission evaluations when opacity exceeds 40% for two minutes or more.

LCP:ml
0138Y

Attachment

L. C. Polk

Visible Emissions Evaluation Record

Plant Name: Hercules, Inc.

Address: West 7th St.

City: Hattiesburg Miss.

Emission Point: 009

Date: 8-1-84

Is emission point operation normal ? _____

V. E. Observer: Bobbie Draughn

Certification Expiration: 10-19-84

Set No.	Time		Opacity	
	Start	End	Sum	Average
1	8:00 Am	8:06	620	25.8
2	8:06	8:12	765	31.9
3	8:12	8:18 Am	640	26.7

Overall Average: 28.1

	Initial	Final
Distance to discharge	2 Lengths	
Direction to discharge	N	
Height of observation point	Ground	
Height of discharge	200 ft.	
Plume color	Gray	
Plume background	Gray Sky	
Water vapor in plume ?		
Wind direction (from)	SE	
Wind speed	5-10 mph	
Ambient temperature	74°	
Discharge temperature		
Sky conditions	Cloudy	

Min.	Seconds 0	15	30	45
0	20	20	20	20
1	20	20	25	25
2	25	25	25	25
3	25	30	30	25
4	30	30	30	30
5	30	30	30	30
0	30	30	30	30
1	35	35	30	30
2	30	30	40	40
3	40	40	50	50
4	30	20	20	20
5	30	25	25	25
0	25	25	25	25
1	25	25	25	25
2	30	30	30	25
3	25	25	25	25
4	30	30	25	25
5	30	30	30	25

Diagram Of Observation/Discharge Point

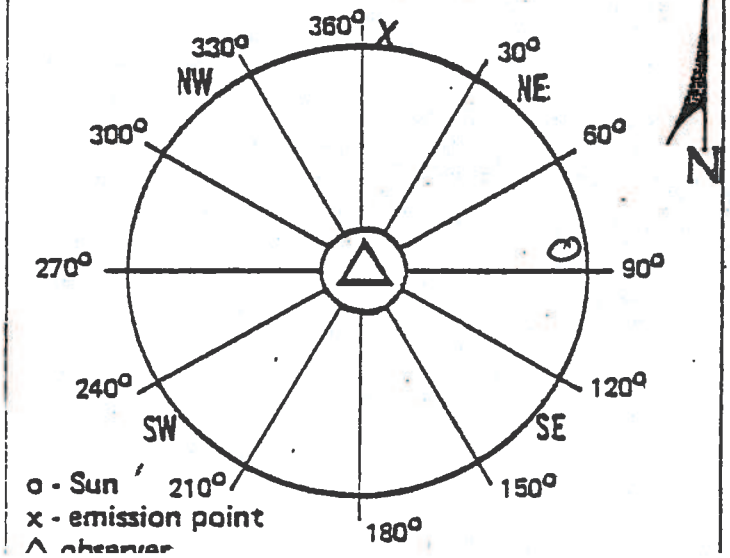

o - Sun
x - emission point
Δ observer

Remarks: _____

Visible Emissions Evaluation Record

Plant Name: Hercules Inc.

Address: West 7th St.

City: Hattiesburg Miss

Emission Point: 010

Date: 8-20-84

Is emission point operation normal ? _____

V. E. Observer: Bobbie Draughn

Certification Expiration: 10-19-84

Set No.	Time Start	Time End	Opacity Sum	Opacity Average
1	10 25	10 31	125	5.2
2	10 31	10 37	500	20.8
3	10 37	10 43	595	24.8

Overall Average: 16.9

	Initial	Final
Distance to discharge	2 Lengths	
Direction to discharge	N	
Height of observation point	Ground	
Height of discharge	225 ft.	
Plume color	Gray	
Plume background	Gray Sky	
Water vapor in plume ?		
Wind direction (from)	W	
Wind speed	5-10 mph	
Ambient temperature	85°	
Discharge temperature		
Sky conditions	Cloudy	

Min.	Seconds 0	15	30	45
0	5	10	5	5
1	5	5	5	5
2	5	5	5	5
3	5	5	5	5
4	5	5	5	5
5	5	5	5	5
0	5	5	5	5
1	5	5	5	5
2	5	5	5	5
3	5	5	5	5
4	100	100	100	100
5	5	5	5	5
0	5	5	5	5
1	5	5	20	25
2	90	80	25	5
3	10	5	5	5
4	5	5	5	5
5	25	100	100	50

Diagram Of Observation/Discharge Point

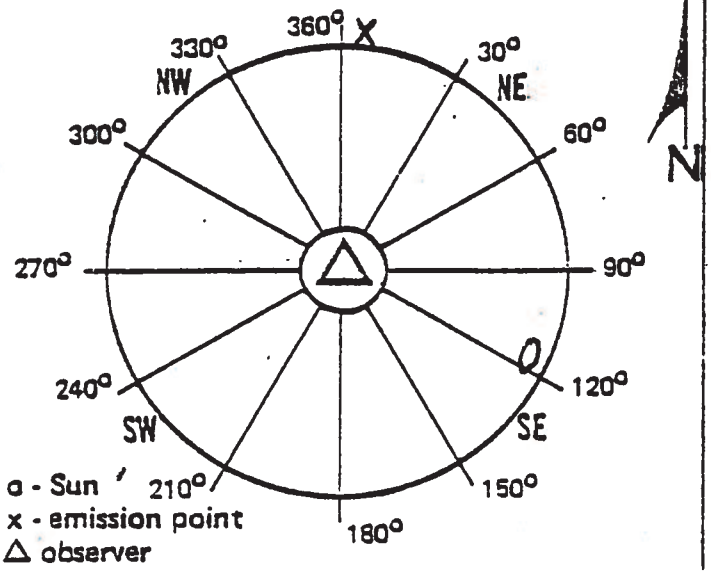

Remarks: _____

Visible Emissions Evaluation Record

Plant Name: Hercules Inc.

Address: West 7th St.

City: Hattiesburg Miss

Emission Point: 010

Date: 8-30-84

Is emission point operation normal ? _____

V. E. Observer: Bobbie Draughn

Certification Expiration: 10-19-84

Set No.	Time		Opacity	
	Start	End	Sum	Average
1	10 00 Am	10 06	635	26.5
2	10 06	10 12	735	30.6
3	10 12 Am	10 18 Am	1540	64.2

Overall Average: 40.4

	Initial	Final
Distance to discharge	2 Lengths	
Direction to discharge	N	
Height of observation point	Ground	
Height of discharge	225 ft.	
Plume color	Gray	
Plume background	Blue Sky	
Water vapor in plume ?		
Wind direction (from)	NE	
Wind speed	5 mph	
Ambient temperature	82°	
Discharge temperature		
Sky conditions	Pc	

	Seconds			
Min.	0	15	30	45
0	30	30	30	30
1	25	25	25	25
2	25	25	25	25
3	25	25	30	30
4	30	30	25	25
5	20	25	25	25
0	25	30	30	30
1	25	25	25	15
2	20	20	25	25
3	30	40	40	40
4	40	30	30	30
5	40	40	40	40
0	50	60	60	40
1	50	50	40	50
2	50	50	60	70
3	80	70	70	70
4	70	70	70	90
5	90	90	70	70

Diagram Of Observation/Discharge Point

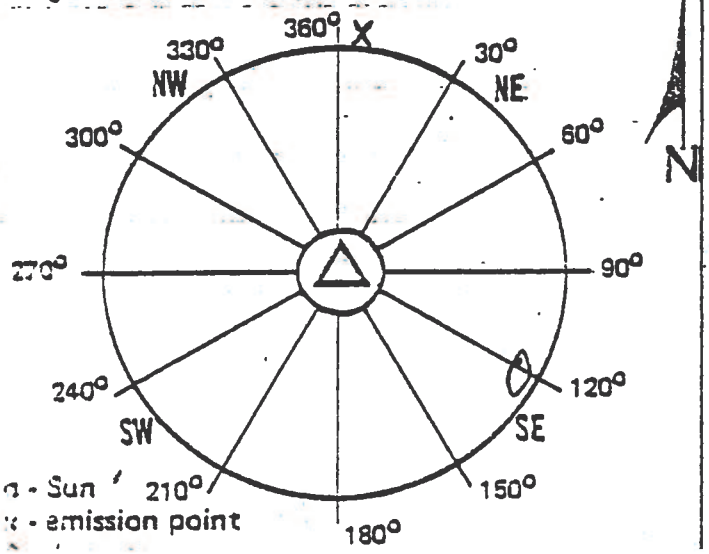

Remarks: _____

Visible Emissions Evaluation Record

Plant Name: Hercules Inc.

Address: West 7th St.

City: Hattiesburg Miss.

Emission Point: 009

Date: 8-30-84

Is emission point operation normal ? _____

V. E. Observer: Bobbie Draughn

Certification Expiration: 10-19-84

Set No.	Time		Opacity	
	Start	End	Sum	Average
1	10⁰⁰ Am	10⁰⁶ Am	645	26.9
2	10⁰⁶	10¹²	670	27.9
3	10¹² Am	10¹⁸ Am	1260	52.5

Overall Average: 35.8

	Initial	Final
Distance to discharge	2 Lengths	
Direction to discharge	N	
Height of observation point	Ground	
Height of discharge	200 ft.	
Plume color	Gray	
Plume background	Blue Sky	
Water vapor in plume ?		
Wind direction (from)	NE	
Wind speed	5 mph	
Ambient temperature	82°	
Discharge temperature		
Sky conditions	PC	

Diagram Of Observation/Discharge Point

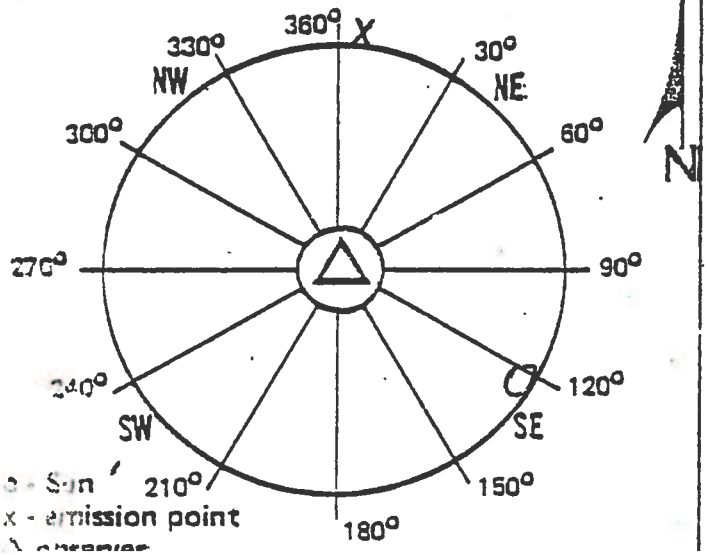

S - Sun
X - emission point
O - observer

Min.	Seconds 0	15	30	45
0	30	30	30	30
1	30	30	30	30
2	30	25	25	25
3	25	25	25	25
4	25	25	30	30
5	30	20	20	20
0	20	30	30	30
1	25	25	25	25
2	25	25	25	25
3	25	25	30	30
4	30	30	25	25
5	30	30	40	40
0	40	40	40	40
1	30	30	30	30
2	30	30	30	40
3	50	70	70	70
4	80	80	80	70
5	70	70	70	70

Remarks: _____

Visible Emissions Evaluation Record

Plant Name: Hercules Inc.

Address: West 7th St.

City: Hattiesburg Miss.

Emission Point: 009

Date: 8-23-84

Is emission point operation normal ? _____

V. E. Observer: Bobbie Draughn

Certification Expiration: 10-19-84

Set No.	Time		Opacity	
	Start	End	Sum	Average
1	10 15 Am	10 21 Am	785	32.7
2	10 21	10 27	945	39.4
3	10 27	10 33 Am	585	24.4

Overall Average: 32.2

	Initial	Final
Distance to discharge	2 Lengths	
Direction to discharge	N	
Height of observation point	Ground	
Height of discharge	200 ft.	
Plume color	Gray	
Plume background	Gray Sky	
Water vapor in plume ?		
Wind direction (from)	NW	
Wind speed	5-10 mph	
Ambient temperature	84°	
Discharge temperature		
Sky conditions	Cloudy	

Min.	Seconds 0	15	30	45
0	30	30	30	40
1	40	40	35	35
2	30	30	30	35
3	30	30	25	35
4	35	35	40	40
5	35	35	20	20
0	30	30	35	30
1	30	30	30	30
2	25	25	30	35
3	40	40	50	50
4	50	50	50	60
5	50	45	45	55
0	50	40	40	35
1	35	35	30	25
2	20	10	10	15
3	15	20	20	20
4	20	20	15	20
5	20	20	25	25

Diagram Of Observation/Discharge Point

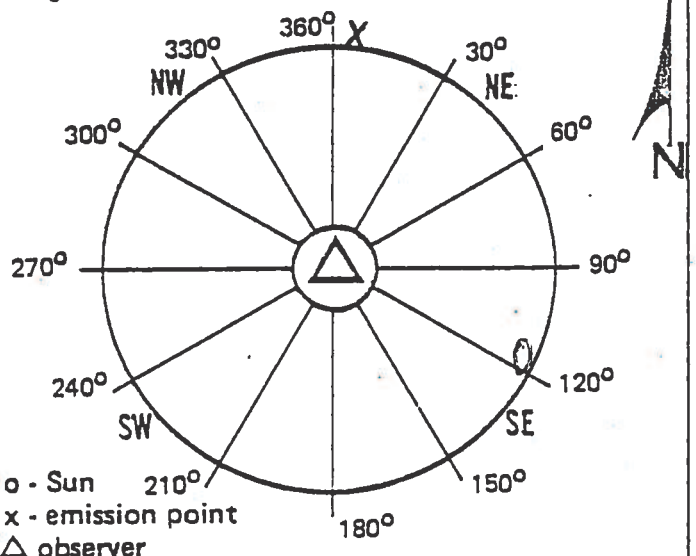

Remarks: _____

Received By: _____

Visible Emissions Evaluation Record

Plant Name: Hercules Inc.

Address: West 7th St.

City: Hattiesburg Miss.

Emission Point: 009

Date: 8-20-84

Is emission point operation normal ? _____

V. E. Observer: Bobbie Draughon

Certification Expiration: 10-19-84

	Initial	Final
Distance to discharge	2 Lengths	
Direction to discharge	N	
Height of observation point	Ground	
Height of discharge	200 ft.	
Plume color	Gray	
Plume background	Gray Sky	
Water vapor in plume ?		
Wind direction (from)	W	
Wind speed	5-10 mph	
Ambient temperature	85°	
Discharge temperature		
Sky conditions	Cloudy	

Set No.	Time		Opacity	
	Start	End	Sum	Average
1	10^{25}	10^{31}	1000	41.7
2	10^{31}	10^{37}	1230	51.3
3	10^{37}	10^{43}	1205	50.2

Overall Average: 47.7

Min.	Seconds 0	15	30	45
0	40	40	50	45
1	50	50	45	40
2	40	40	45	45
3	40	40	40	40
4	40	40	35	35
5	40	40	40	40
0	40	40	40	40
1	40	40	40	40
2	45	45	45	45
3	45	45	50	50
4	100	100	100	100
5	40	35	35	30
0	30	30	30	30
1	30	60	80	100
2	100	90	30	25
3	25	30	20	20
4	20	20	25	35
5	100	100	100	75

Diagram Of Observation/Discharge Point

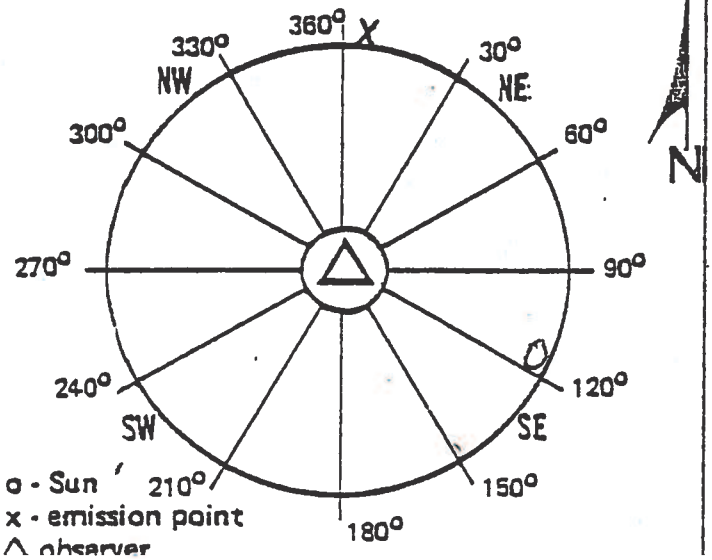

Remarks: _____

Visible Emissions Evaluation Record

int Name: Hercules Inc.

dress: West 7th St.

y: Hattiesburg Miss.

ission Point: 009

te: 8-15-84

mission point operation normal ? _____

	Initial	Final
tance to discharge	2 Lengths	
ection to discharge	N	
ight of observation point	Ground	
ight of discharge	200 ft.	
ime color	Gray	
ime background	Gray Sky	
ter vapor in plume ?		
nd direction (from)	S	
nd speed	5-10 mph	
nbient temperature	84°	
charge temperature		
y conditions	PC	

V. E. Observer: Bobbie Draughn

Certification Expiration: 10-19-84

Set No.	Time		Opacity	
	Start	End	Sum	Average
1	10^{01}	10^{07}	325	13.5
2	10^{07}	10^{13}	325	13.5
3	10^{13}	10^{19}	950	39.6

Overall Average: 22.2

	Seconds			
Min.	0	15	30	45
0	5	5	5	5
1	10	10	10	10
2	15	15	15	15
3	20	20	20	15
4	15	15	15	15
5	15	15	20	20
0	15	15	10	10
1	10	10	10	10
2	10	10	10	10
3	10	10	10	10
4	15	15	15	15
5	20	20	25	30
0	40	40	40	40
1	50	60	60	60
2	50	50	45	45
3	40	40	40	40
4	40	40	30	30
5	20	20	15	15

Remarks: _____

Diagram Of Observation/Discharge Point

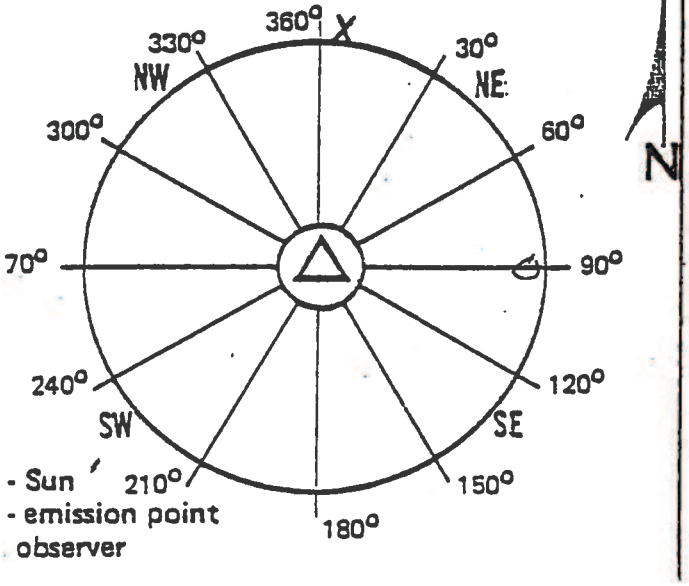

Received By: _____

Visible Emissions Evaluation Record

Plant Name: Hercules Inc.

Address: West 7th St.

City: Hattiesburg Miss.

Emission Point: 009

Date: 8-10-84

Is emission point operation normal ? _____

V. E. Observer: Bobbie Draughn

Certification Expiration: 10-19-84

Set No.	Time		Opacity	
	Start	End	Sum	Average
1	10 30 Am	10 36 Am	810	33.8
2	10 36 Am	10 42 Am	810	33.8
3	10 42 Am	10 48 Am	1045	43.5

Overall Average: 37.0

	Initial	Final
Distance to discharge	2 Lengths	
Direction to discharge	N	
Height of observation point	Ground	
Height of discharge	200 ft.	
Plume color	Gray	
Plume background	Blue Sky	
Water vapor in plume ?		
Wind direction (from)	W	
Wind speed	5-10 mph	
Ambient temperature	87°	
Discharge temperature		
Sky conditions	PC	

Min.	Seconds 0	15	30	45
0	30	30	35	35
1	40	40	40	40
2	30	35	35	40
3	40	40	40	40
4	30	25	25	25
5	30	30	30	25
0	25	20	20	15
1	20	20	25	25
2	20	20	30	35
3	35	35	35	40
4	40	40	40	40
5	50	60	60	60
0	60	65	60	60
1	50	40	35	40
2	40	40	35	40
3	45	50	50	45
4	45	45	40	35
5	35	30	30	30

Diagram Of Observation/Discharge Point

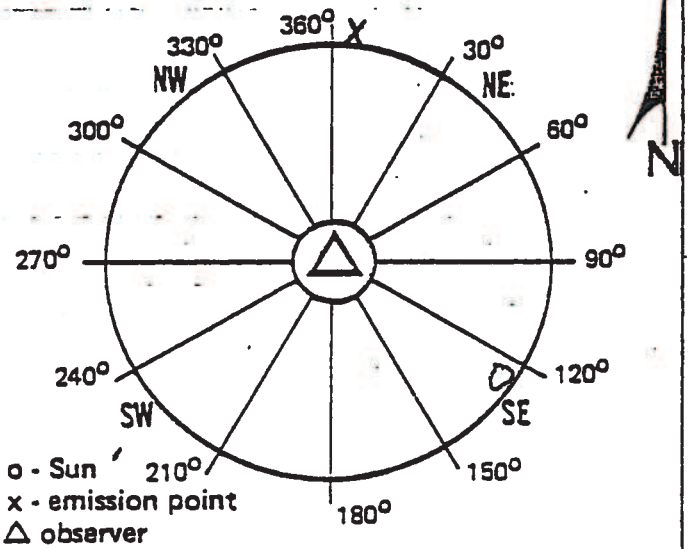

Remarks: _____

Received By: _____

Visible Emissions Evaluation Record

Plant Name: Hercules Inc.

Address: West 7th St.

City: Hattiesburg Miss.

Emission Point: 009

Date: 8-7-84

Is emission point operation normal ? _____

V. E. Observer: Bobbie Draughn

Certification Expiration: 10-19-84

Set No.	Time		Opacity	
	Start	End	Sum	Average
1	10 55 Am	11 01	385	16.0
2	11 01	11 07	680	28.3
3	11 07	11 13 Am	950	39.6

Overall Average: 28.0

	Initial	Final
Distance to discharge	2 Lengths	
Direction to discharge	N	
Height of observation point	Ground	
Height of discharge	200 ft.	
Plume color	Gray	
Plume background	Gray Sky	
Water vapor in plume ?		
Wind direction (from)	S	
Wind speed	5 mph	
Ambient temperature	85°	
Discharge temperature		
Sky conditions	Cloudy	

Min.	Seconds 0	15	30	45
0	10	10	10	10
1	10	10	15	15
2	15	15	15	15
3	15	15	15	15
4	20	20	25	20
5	20	20	20	30
0	25	25	25	25
1	20	20	20	20
2	20	20	30	30
3	35	30	30	25
4	30	30	35	35
5	35	35	40	40
0	40	40	40	40
1	35	35	35	35
2	25	25	25	25
3	30	30	50	55
4	50	50	45	55
5	65	55	35	30

Diagram Of Observation/Discharge Point

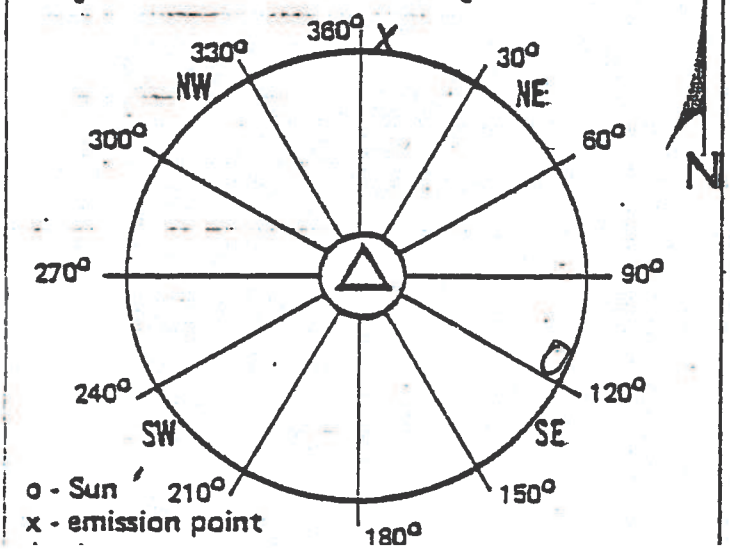

Remarks: _____

DATE 8/7/84

BOILER ROOM ENVIRONMENTAL LOG SHEET

Cleaned Fires		7 - 3 Shift	3 - 11 Shift	11 - Shif
No. 1 Boiler	Started	7:45	5 00	12::
	Stopped	8:25	5 50	1:3-
No. 2 Boiler	Started	10:40	6 00	2:0
	Stopped	11:20	7 00	3:1
No. 3 Boiler	Started	6:15	3 40	11:1
	Stopped	7:25	4 30	12:1
No. 4 Boiler	Started			
	Stopped			

Comments on Boiler Operation

OPACITY EVALUATION - WOOD BURNING BOILERS

BOILER NO. 1			BOILER NO. 2			BOILER NO. 3			BOILER NO. 4			
Time	Duration	Note	Time	Duration	Note	Time	Duration	Note	Time	Duration	Note	1.Cleaning E
PM 1:08	4-5	2				7:04	5-M	1				2.Fuel Oil Adjustment
2:35	5-5	1				3:55	30 S	1				3.Load Chang
						PM 11:20	1-M	1				4.Meter Defe
						11:45	5-5	1				5.Cleaning M Lenses
												6. We

COMMENTS ON OPACITY & METER OPERATION

DATE 8/10/84

BOILER ROOM ENVIRONMENTAL LOG SHEET

Cleaned Fires		7 - 3 Shift	3 - 11 Shift	11 - Shift
No. 1 Boiler	Started	8:45	4:55	12:
	Stopped	10:00	5:10	1:
No. 2 Boiler	Started	10:20	6:35	3:
	Stopped	11:20	7:50	3:
No. 3 Boiler	Started START	7:15	3:20	11:
	Stopped	8:25	4:35	12:
No. 4 Boiler	Started			
	Stopped Out			

Comments on Boiler Operation

OPACITY EVALUATION - WOOD BURNING BOILERS

BOILER NO. 1			BOILER NO. 2			BOILER NO. 3			BOILER NO. 4			
Time	Duration	Note	Time	Duration	Note	Time	Duration	Note	Time	Duration	Note	1.Cleaning B
5:13	4-5	1				7:37	10-5	5				2.Fuel Oil Adjustment
												3.Load Chang
												4.Meter Defe
												5.Cleaning M Lenses

COMMENTS ON OPACITY & METER OPERATION

DATE 8/15/84

BOILER ROOM ENVIRONMENTAL LOG SHEET

Cleaned Fires		7 - 3 Shift	3 - 11 Shift	11 - Shift
No. 1 Boiler	Started	910	5:00	12:15
	Stopped	1000	6:00	1:10
No. 2 Boiler	Started	1025	6:30	3:05
	Stopped	1120	7:40	4:00
No. 3 Boiler	Started	730	3:20	11:0[illegible]
	Stopped	825	4:30	11:5[illegible]
No. 4 Boiler	Started	X		
	Stopped			

Comments on Boiler Operation

OPACITY EVALUATION - WOOD BURNING BOILERS

BOILER NO. 1			BOILER NO. 2			BOILER NO. 3			BOILER NO. 4		
Time	Duration	Note	Time	Duration	Note	Time	Duration	Note	Time	Duration	Note
~~3:12~~	~~10-5~~	~~2~~	3:12	10-5	2	6:45	8-5	5			
3:11	30-5	3	1:18	30-5	1	11:14	30-5	1			

1. Cleaning Bo
2. Fuel Oil Adjustment
3. Load Change
4. Meter Defec
5. Cleaning Me Lenses

COMMENTS ON OPACITY & METER OPERATION

DATE 8-20-84

BOILER ROOM ENVIRONMENTAL LOG SHEET

Cleaned Fires		7 - 3 Shift	3 - 11 Shift	11 - 7 Shift
No. 1 Boiler	Started	8:30	5:30	12:45
	Stopped	9:35	6:35	1:50
No. 2 Boiler	Started	10:35	5:20	3:35
	Stopped	12:00	8:35	4:25
No. 3 Boiler	Started	7:15	3:40	11:15
	Stopped	8:15	4:50	12:10
No. 4 Boiler	Started	~~X~~		
	Stopped			

Comments on Boiler Operation

OPACITY EVALUATION - WOOD BURNING BOILERS

BOILER NO. 1			BOILER NO. 2			BOILER NO. 3			BOILER NO. 4		
Time	Duration	Note	Time	Duration	Note	Time	Duration	Note	Time	Duration	Note
8:43	30 Sec.	1	11:00	30-S	2	7:38	15 Sec.	1	-	-	
7:45	5 Sec.	1				11:35	30-S	4			
4:01	5-S	2									
7:35	10-S	2									
10:49	20-S	2									

1. Cleaning Boi
2. Fuel Oil Adjustment
3. Load Changes
4. Meter Defect
5. Cleaning Mete Lenses
6. Wood

COMMENTS ON OPACITY & METER OPERATION

DATE 8-30-84

BOILER ROOM ENVIRONMENTAL LOG SHEET

Cleaned Fires		7 - 3 Shift	3 - 11 Shift	11 - 7 Shift
	Started	8:00	540	1:20
lo. 1 Boiler	Stopped	8:45	3:25	1:40
	Started	10:45	720	2:23
lo. 2 Boiler	Stopped	11:20	800	3:25
	Started	6:50	335	11:15
lo. 3 Boiler	Stopped	7:45	430	12:25
	Started			
lo. 4 Boiler	Stopped			

start

Comments on Boiler Operation

OPACITY EVALUATION - WOOD BURNING BOILERS

BOILER NO. 1			BOILER NO. 2			BOILER NO. 3			BOILER NO. 4		
Time	Duration	Note	Time	Duration	Note	Time	Duration	Note	Time	Duration	Note
:55	305	1				11:25	10:5	1			
						12:35	5-5	5			

1. Cleaning Boi
2. Fuel Oil Adjustment
3. Load Changes
4. Meter Defect
5. Cleaning Met Lenses

MMENTS ON OPACITY & METER OPERATION

DATE 8/23/84

BOILER ROOM ENVIRONMENTAL LOG SHEET

Cleaned Fires		7 - 3 Shift	3 - 11 Shift	11 - 7 Shift
No. 1 Boiler	Started	8:05	5:00	12:50
	Stopped	9:00	5:20	2:00
No. 2 Boiler	Started	10:30	6:45	3:00
	Stopped	11:15	8:00	4:15
No. 3 Boiler	Started	7:10	3:30	11:35
	Stopped	7:55	4:25	12:30
No. 4 Boiler	Started			
	Stopped			

Comments on Boiler Operation

OPACITY EVALUATION - WOOD BURNING BOILERS

BOILER NO. 1			BOILER NO. 2			BOILER NO. 3			BOILER NO. 4		
Time	Duration	Note	Time	Duration	Note	Time	Duration	Note	Time	Duration	Note
1103	3 05	2				1150	3 05	5			
320	3 05	2									
3:30	3 05	2									

1. Cleaning Boi
2. Fuel Oil Adjustment
3. Load Changes
4. Meter Defect
5. Cleaning Mete Lenses

OMMENTS ON OPACITY & METER OPERATION

HERCULES

RECEIVED
1984 AUG 10 AM 8:5

Hercules Incorporated
West 7th Street
P.O. Box 1937
Hattiesburg, MS 39401
(601) 545-3450

August 6, 1984

Mr. Dwight K. Wylie, P.E. Chief
Air Division
Bureau of Pollution Control
P. O. Box 10385
Jackson, Mississippi 39209

Dear Mr. Wylie:

In reference to operating permit No. 0800-0001, please find the attached monthly report detailing the compliance status of the boilers for emission points 009 and 010.

We will continue to submit this report on a monthly basis.

Very truly yours,

Charles Jordan

Charles Jordan
Environmental Supervisor

CSJ:bs

Attachments

Visible Emissions Evaluation Record

Plant Name: Hercules Inc.

Address: West 7th St.

City: Hattiesburg Miss

Emission Point: 010

Date: 7-5-84

Is emission point operation normal ? _____

V. E. Observer: Bobbie Draughn

Certification Expiration: 10-19-84

Set No.	Time		Opacity	
	Start	End	Sum	Average
1	12^05 pm	12^11 pm	565	23.5
2	12^11 pm	12^17 pm	695	29.0
3	12^17 pm	12^23 pm	665	27.7

Overall Average: 26.7

	Initial	Final
Distance to discharge	2 Lengths	
Direction to discharge	N	
Height of observation point	Ground	
Height of discharge	225 ft.	
Plume color	Gray	
Plume background	Gray Sky	
Water vapor in plume ?		
Wind direction (from)	W	
Wind speed	10 mph	
Ambient temperature	92°	
Discharge temperature		
Sky conditions	PC	

Min.	Seconds 0	15	30	45
0	25	25	20	20
1	20	20	30	30
2	25	25	25	20
3	20	20	20	20
4	20	20	25	25
5	25	25	30	30
0	30	30	25	25
1	30	30	40	40
2	50	50	50	40
3	20	20	20	20
4	20	20	25	25
5	20	20	20	25
0	20	20	20	20
1	30	25	30	25
2	25	25	25	25
3	25	25	40	40
4	25	30	25	25
5	30	35	35	40

Diagram Of Observation/Discharge Point

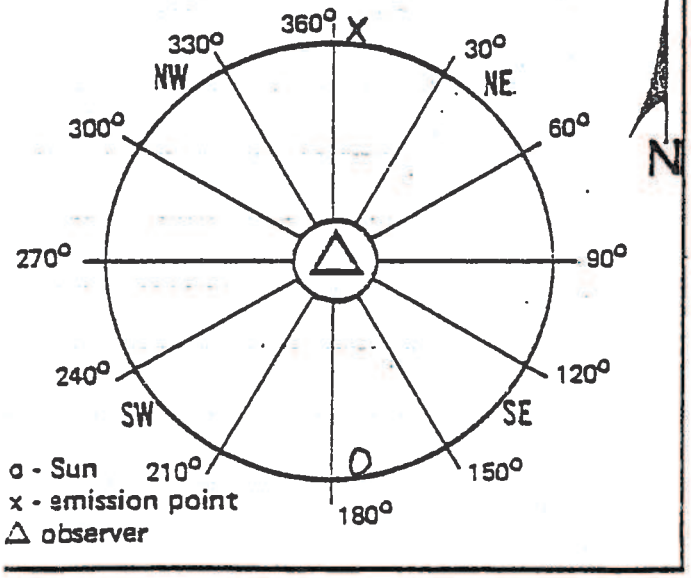

Remarks: _____

Received By: _____

HERCULES

Visible Emissions Evaluation Record

Plant Name: Hercules Inc.

Address: West 7th St.

City: Hattiesburg Miss

Emission Point: 010

Date: 7-12-84

Is emission point operation normal ? _____

V. E. Observer: Bobbie Draughn

Certification Expiration: 10-19-84

Set No.	Time Start	Time End	Opacity Sum	Opacity Average
1	9⁰⁰ AM	9⁰⁶ AM	695	29.0
2	9⁰⁶ AM	9¹² AM	520	21.7
3	9¹² AM	9¹⁸ AM	580	24.2

Overall Average: 25.0

	Initial	Final
Distance to discharge	2 Lengths	
Direction to discharge	N	
Height of observation point	Ground	
Height of discharge	225 ft.	
Plume color	Gray	
Plume background	Blue Sky	
Water vapor in plume ?		
Wind direction (from)	W	
Wind speed	5-10 mph	
Ambient temperature	88°	
Discharge temperature		
Sky conditions	Clear	

Min.	Seconds 0	15	30	45
0	40	40	50	50
1	40	40	35	35
2	35	35	35	30
3	25	25	25	25
4	25	15	15	15
5	15	15	15	15
0	15	20	15	20
1	20	20	20	20
2	15	20	20	20
3	25	25	25	20
4	25	25	25	25
5	25	25	25	25
0	25	25	25	20
1	20	25	25	30
2	20	25	25	25
3	20	20	30	35
4	25	25	25	25
5	20	20	20	25

Diagram Of Observation/Discharge Point

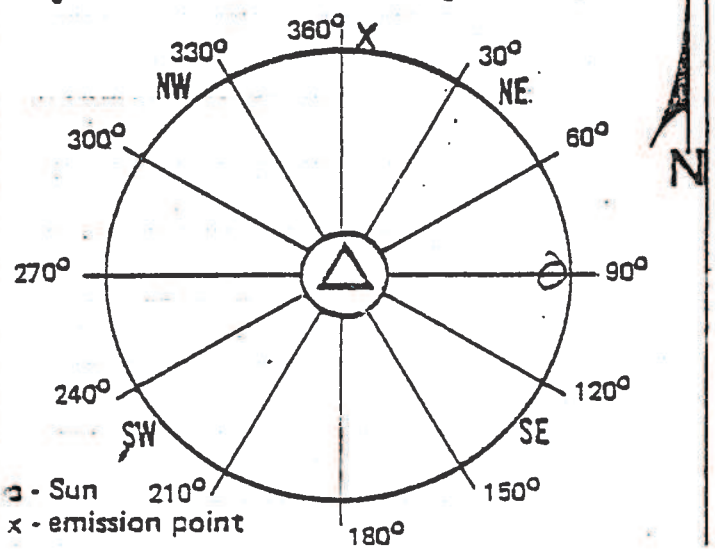

Remarks: _____

Visible Emissions Evaluation Record

Plant Name: Hercules Inc.

Address: West 7th St.

City: Hi'Loug Miss.

Emission Point: 009

Date: 7-13-84

Is emission point operation normal ? _____

V. E. Observer: Bobbie Draughn

Certification Expiration: 10-19-84

Set No.	Time		Opacity	
	Start	End	Sum	Average
1	10 53 Am	11 01	1260	52.5
2	11 01	11 07	890	37.1
3	11 07	11 13 Am	600	25.0

Overall Average: 38.2

	Initial	Final
Distance to discharge	2 Lengths	
Direction to discharge	N	
Height of observation point	Ground	
Height of discharge	200 ft.	
Plume color	Gray + white	
Plume background	Gray Sky	
Water vapor in plume ?		
Wind direction (from)	W	
Wind speed	5-10 mph	
Ambient temperature	89°	
Discharge temperature		
Sky conditions	Pc	

Min.	Seconds 0	15	30	45
0	30	30	30	40
1	50	60	50	50
2	45	50	50	50
3	50	55	55	60
4	60	60	75	70
5	60	60	60	60
0	50	40	50	50
1	40	45	50	40
2	35	40	40	40
3	40	40	40	35
4	35	35	30	25
5	25	20	20	25
0	25	25	25	25
1	25	25	25	25
2	25	25	25	20
3	20	25	25	25
4	25	30	25	30
5	25	25	25	25

Diagram Of Observation/Discharge Point

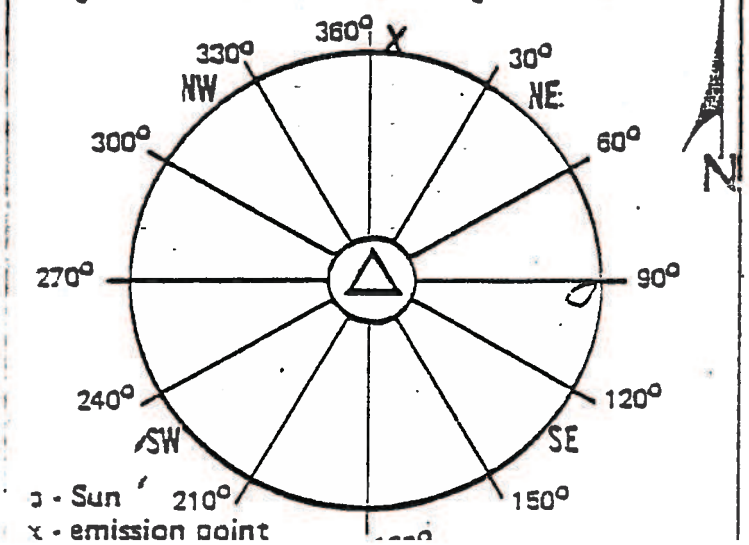

Remarks: _____

Visible Emissions Evaluation Record

Plant Name: Hercules Inc.

Address: West 7th St.

City: Hattiesburg Miss.

Emission Point: 009

Date: 7-24-84

Is emission point operation normal ? _____

V. E. Observer: Bobbie Daughrm

Certification Expiration: 10-19-84

Set No.	Time Start	Time End	Opacity Sum	Opacity Average
1	8:00 Am	8:06	925	34.4
2	8:06	8:12	825	34.4
3	8:12	8:18	935	34.8

Overall Average: 34.5

	Initial	Final
Distance to discharge	2 Lengths	
Direction to discharge	N	
Height of observation point	Ground	
Height of discharge	200 ft.	
Plume color	white	
Plume background	Blue Sky	
Water vapor in plume ?		
Wind direction (from)	E	
Wind speed	10 mph	
Ambient temperature	76°	
Discharge temperature		
Sky conditions	Clear	

Min.	Seconds 0	15	30	45
0	30	30	35	35
1	35	35	40	40
2	35	35	35	35
3	30	30	30	30
4	30	30	35	35
5	35	40	40	40
0	35	35	25	20
1	25	30	35	40
2	40	50	50	50
3	45	35	35	35
4	20	20	25	25
5	30	40	40	40
0	35	35	40	40
1	40	35	35	30
2	35	40	35	30
3	35	35	40	35
4	35	35	35	35
5	35	30	25	30

Diagram Of Observation/Discharge Point

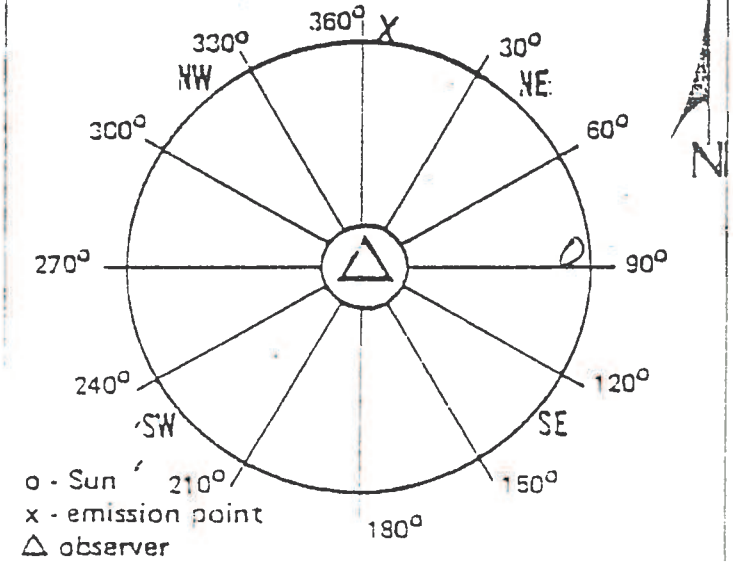

Remarks: _____

Visible Emissions Evaluation Record

Plant Name: Hercules Inc.

Address: West 7th St.

City: Hattiesburg Miss

Emission Point: 010

Date: 7-17-84

Emission point operation normal ? _____

V. E. Observer: Bobbie Draughn

Certification Expiration: 10-19-84

Set No.	Time Start	Time End	Opacity Sum	Opacity Average
1	12 00 N	12 06	560	23.3
2	12 06 pm	12 12	775	32.3
3	12 12	12 18 pm	470	19.6

Overall Average: 25.1

	Initial	Final
Distance to discharge	2 Lengths	
Direction to discharge	N	
Height of observation point	Ground	
Height of discharge	225 ft.	
Plume color	Gray	
Plume background	Gray Sky	
Water vapor in plume ?		
Wind direction (from)	W	
Wind speed	5 mph	
Ambient temperature	91°	
Discharge temperature		
Sky conditions	PC	

Diagram Of Observation/Discharge Point

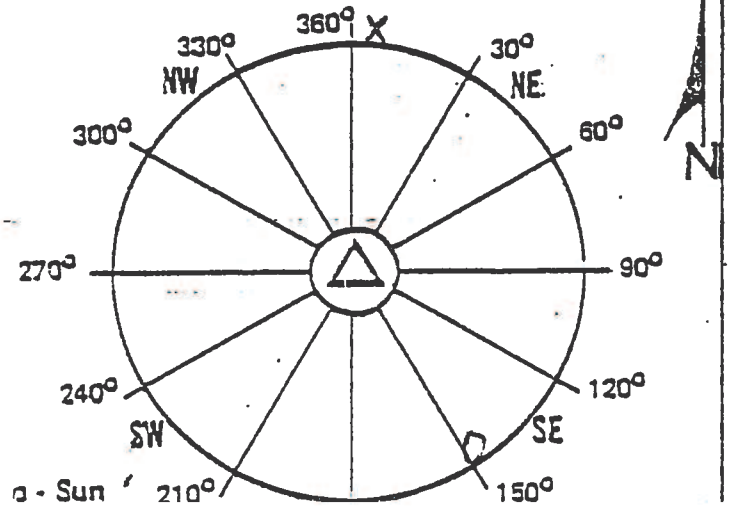

Min.	Seconds 0	15	30	45
0	20	20	20	20
1	25	25	25	25
2	25	25	25	25
3	25	25	25	25
4	25	20	20	20
5	20	25	25	25
0	40	40	30	30
1	25	25	25	25
2	35	35	30	30
3	40	50	50	50
4	40	25	25	25
5	30	25	25	20
0	20	20	25	25
1	25	25	25	20
2	15	15	15	20
3	20	20	20	25
4	25	25	20	15
5	15	15	10	10

Remarks: _____

Visible Emissions Evaluation Record

Plant Name: Hercules Inc.

Address: West 7th St.

City: H'burg Miss

Emission Point: 010

Date: 7-19-84

Is emission point operation normal ? _____

V. E. Observer: Bobbie Draughn

Certification Expiration: 10-19-84

Set No.	Time		Opacity	
	Start	End	Sum	Average
1	12° N	12° 6	620	25.8
2	12° 6	12 12	810	33.8
3	12 12	12 18 PM	1020	42.5

Overall Average: 34.0

	Initial	Final
Distance to discharge	2 Lengths	
Direction to discharge	N	
Height of observation point	Ground	
Height of discharge	225 ft.	
Plume color	Gray	
Plume background	Blue Sky	
Water vapor in plume ?		
Wind direction (from)	SE	
Wind speed	5-10 mph	
Ambient temperature	88°	
Discharge temperature		
Sky conditions	Clear	

Diagram Of Observation/Discharge Point

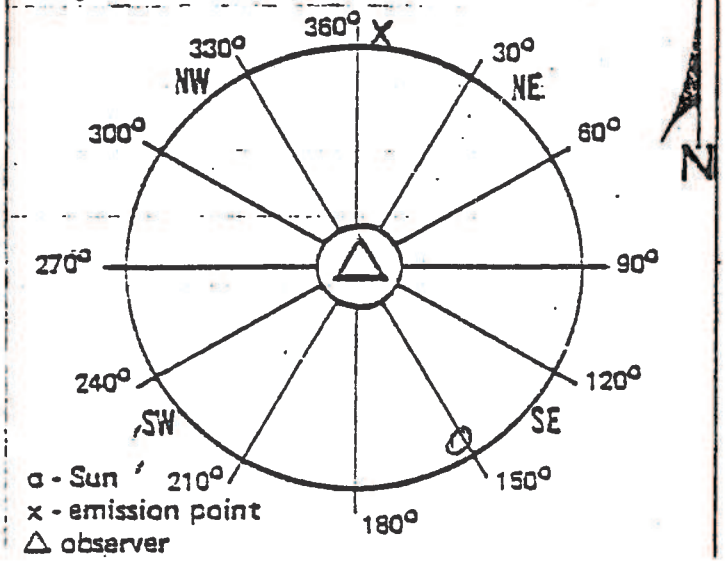

Min.	Seconds 0	15	30	45
0	25	25	25	25
1	25	25	25	25
2	25	25	25	25
3	25	25	25	25
4	25	25	30	30
5	25	25	30	30
0	30	35	35	40
1	40	40	40	35
2	30	30	30	25
3	30	35	40	40
4	40	35	35	35
5	30	25	25	30
0	30	40	40	50
1	50	45	45	45
2	40	45	45	50
3	60	45	40	45
4	45	45	40	35
5	35	40	30	35

Remarks: _____

Visible Emissions Evaluation Record

Plant Name: Hercules Inc.

Address: West 7th St.

City: Hi'burg Miss.

Emission Point: 009

Date: 7-19-84

Is emission point operation normal ? _____

V. E. Observer: Bobbie Draughon

Certification Expiration: 10-19-84

Set No.	Time Start	Time End	Opacity Sum	Opacity Average
1	12:00	12:06	460	19.2
2	12:06 Pm	12:12	1105	46.0
3	12:12	12:18 Pm	940	39.2

Overall Average: 34.8

	Initial	Final
Distance to discharge	2 Lengths	
Direction to discharge	N	
Height of observation point	Ground	
Height of discharge	200 ft.	
Plume color	Gray	
Plume background	Blue Sky	
Water vapor in plume ?		
Wind direction (from)	SE	
Wind speed	5-10 mph	
Ambient temperature	88°	
Discharge temperature		
Sky conditions	Clear	

Min.	Seconds 0	15	30	45
0	15	15	20	20
1	15	15	15	15
2	15	15	15	15
3	20	20	20	20
4	25	20	15	15
5	15	20	40	40
0	30	50	50	50
1	55	55	60	60
2	50	60	55	50
3	40	40	40	40
4	40	35	30	40
5	45	45	45	40
0	35	35	40	50
1	50	50	40	40
2	40	35	35	40
3	50	55	45	40
4	35	35	30	30
5	30	35	30	35

Diagram Of Observation/Discharge Point

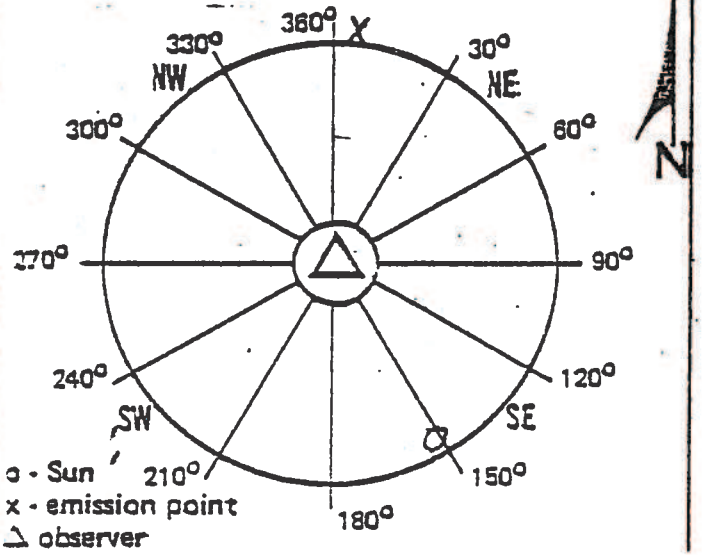

Remarks: _____

HERCULES

Hercules Incorporated
West 7th Street
P.O. Box 1937
Hattiesburg, MS 39401
(601) 545-3450

July 6, 1984

RECEIVED
JUL 9 REC'D
DEPT. OF ENVIRONMENTAL QUALITY
BUREAU OF POLLUTION CONTROL

Mr. Dwight K. Wylie, P.E. Chief
Air Division
Bureau of Pollution Control
P. O. Box 10385
Jackson, Mississippi 39209

Dear Mr. Wylie:

In reference to operation Permit No. 0800-0001, please find the attached monthly report detailing the compliance status of the boilers for emission points 009 and 010.

We will continue to submit this report on a monthly basis.

Very truly yours,

Charles Jordan

Charles Jordan
Environmental Sueprvisor

CSJ:sw

Attachments

HERCULES

Interoffice Memo

Hattiesburg, Mississippi
July 3, 1984

To: C. S. Jordan

From: L. C. Polk

Operating Permit No. 0800-00001 Hattiesburg, MS
Issued For The Operation Of Air Emissions Equipment

In reference to the above permit, Part III, Other Requirements, 1-C, the following monthly report is for June 1984.

The report details the compliance status of the boilers with copies of all visible emissions evaluations in which any reading exceeds 40% opacity.

Number of VEE copies attached = 7.

In addition, copies of log sheets are attached for all visible emission evaluations when opacity exceeds 40% for two minutes or more.

L. C. Polk

LCP:ps
0239N

Attachment

HERCULES

Visible Emissions Evaluation Record

Plant Name: Hercules Inc.

Address: West 7th St.

City: Hattiesburg Miss.

Emission Point: 009

Date: 6-26-84

Is emission point operation normal ?

V. E. Observer: Bobbie Draughn

Certification Expiration: 10-19-84

Set No.	Time Start	Time End	Opacity Sum	Opacity Average
1	10^10 Am	10^16	995	41.5
2	10^16	10^22	1110	46.3
3	10^22	10^28 Am	1005	41.9

Overall Average: 43.2

	Initial	Final
Distance to discharge	2 Lengths	
Direction to discharge	N	
Height of observation point	Ground	
Height of discharge	200 ft.	
Plume color	Gray	
Plume background	Blue Sky	
Water vapor in plume ?		
Wind direction (from)	NE	
Wind speed	10 mph	
Ambient temperature	86°	
Discharge temperature		
Sky conditions	PC	

Min.	Seconds 0	15	30	45
0	30	30	30	35
1	30	35	35	35
2	35	35	35	35
3	40	40	40	40
4	50	60	60	70
5	50	50	50	45
0	45	45	45	45
1	45	50	50	50
2	50	50	55	50
3	50	40	40	40
4	40	45	45	40
5	40	50	50	50
0	50	50	45	45
1	40	40	40	40
2	40	40	35	35
3	40	40	40	40
4	45	45	40	45
5	40	40	45	45

Diagram Of Observation/Discharge Point

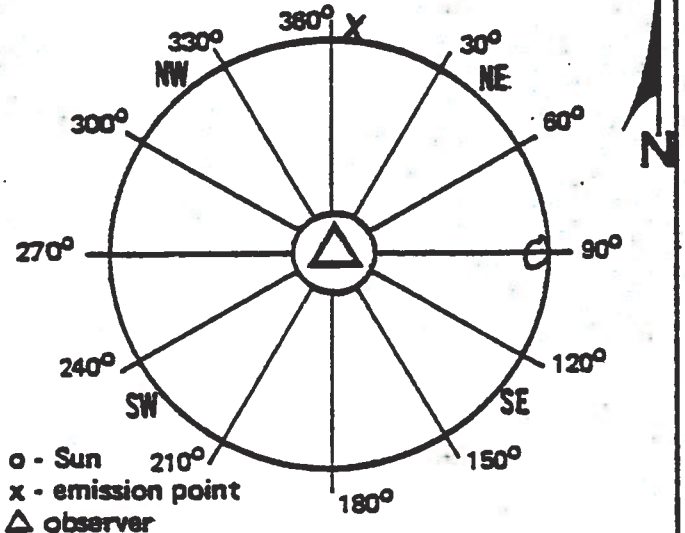

Remarks:

Received By:

HERCULES

Visible Emissions Evaluation Record

Plant Name: Hercules Inc.

Address: West 7th St.

City: Hattiesburg Miss.

Emission Point: 009

Date: 6-18-84

Is emission point operation normal ? _____

V. E. Observer: Bobbie Draughn

Certification Expiration: 10-19-84

Set No.	Time		Opacity	
	Start	End	Sum	Average
1	9⁰⁷ AM	9¹³ AM	1000	41.7
2	9¹³ AM	9¹⁹ AM	790	32.9
3	9¹⁹ AM	9²⁵ AM	575	24.0

Overall Average: 32.9

	Initial	Final
Distance to discharge	2 Lengths	
Direction to discharge	N	
Height of observation point	Ground	
Height of discharge	200 ft.	
Plume color	Gray	
Plume background	Blue Sky	
Water vapor in plume ?		
Wind direction (from)	East	
Wind speed	5 mph	
Ambient temperature	83°	
Discharge temperature		
Sky conditions	Pc	

Diagram Of Observation/Discharge Point

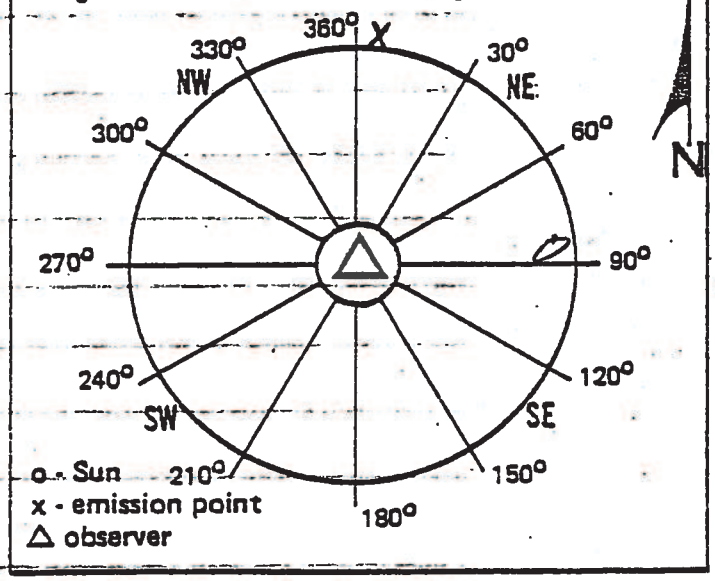

Min.	Seconds 0	15	30	45
0	20	20	20	20
1	20	20	20	20
2	25	25	40	40
3	50	60	60	60
4	50	50	50	60
5	65	70	70	65
0	60	50	50	50
1	45	40	40	40
2	35	30	25	25
3	25	25	20	25
4	25	30	30	20
5	25	25	25	25
0	25	35	35	35
1	30	25	20	25
2	25	25	20	20
3	20	20	15	15
4	15	15	15	15
5	20	25	30	50

Remarks: _____

Received By: _____

HERCULES

Visible Emissions Evaluation Record

Plant Name: Hercules Inc.

Address: West 7th St.

City: Hattiesburg Miss.

Emission Point: 009

Date: 6-21-84

Is emission point operation normal ? _____

V. E. Observer: Bobbie Draughon

Certification Expiration: 10-19-84

Set No.	Time		Opacity	
	Start	End	Sum	Average
1	12 00 PM	12 06 PM	530	22.1
2	12 06 PM	12 12 PM	430	17.9
3	12 12 PM	12 18 PM	610	25.4

Overall Average: 21.8

	Initial	Final
Distance to discharge	2 Lengths	
Direction to discharge	N	
Height of observation point	Ground	
Height of discharge	200 ft.	
Plume color	Gray	
Plume background	Blue Sky	
Water vapor in plume ?		
Wind direction (from)	W	
Wind speed	10 mph	
Ambient temperature	95°	
Discharge temperature		
Sky conditions	Pc	

Min.	Seconds 0	15	30	45
0	25	25	25	25
1	15	15	15	15
2	25	20	25	25
3	20	25	25	30
4	30	30	25	25
5	20	15	15	15
0	15	15	15	15
1	20	20	20	20
2	20	20	15	15
3	15	15	15	15
4	15	15	20	20
5	25	25	20	20
0	20	25	20	25
1	30	35	40	40
2	50	45	30	30
3	25	25	25	20
4	15	15	15	15
5	15	15	20	15

Diagram Of Observation/Discharge Point

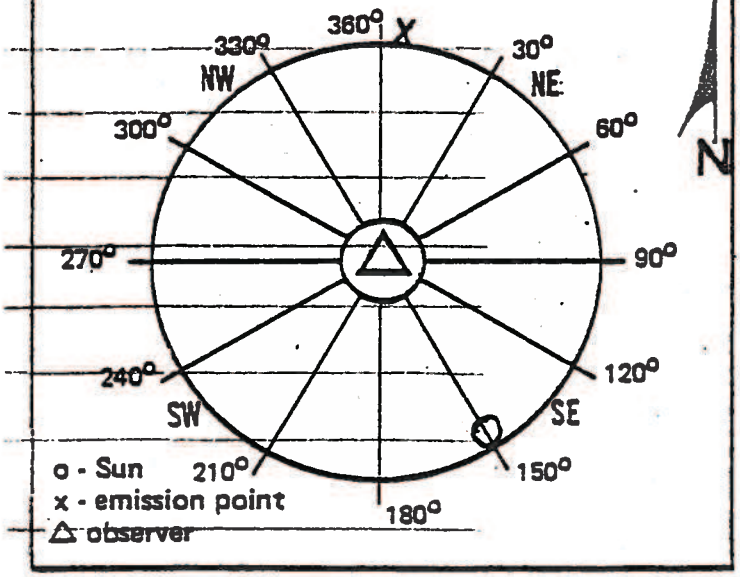

Remarks: _____

Received By: _____

HERCULES

Visible Emissions Evaluation Record

Plant Name: Hercules Inc.

Address: West 7th St.

City: Hattiesburg Miss

Emission Point: 010

Date: 6-21-84

Is emission point operation normal ?

V. E. Observer: Bobbie Draughn

Certification Expiration: 10-19-84

Set No.	Time Start	Time End	Opacity Sum	Opacity Average
1	12°° N	12°6 pm	615	25.6
2	12°6 pm	12'12	585	24.4
3	12'12 pm	12'18 pm	825	34.4

Overall Average: 28.1

	Initial	Final
Distance to discharge	2 Lengths	
Direction to discharge	N	
Height of observation point	Ground	
Height of discharge	225 ft.	
Plume color	Gray	
Plume background	Blue Sky	
Water vapor in plume ?		
Wind direction (from)	W	
Wind speed	10 mph	
Ambient temperature	95°	
Discharge temperature		
Sky conditions	PC	

Min.	Seconds 0	15	30	45
0	30	30	25	25
1	25	25	25	25
2	25	25	25	25
3	25	25	25	25
4	25	25	25	25
5	30	25	25	25
0	20	20	20	20
1	25	25	25	25
2	25	25	25	25
3	30	30	25	25
4	25	25	20	25
5	25	25	25	25
0	30	30	30	35
1	40	40	40	40
2	50	50	50	45
3	35	35	30	25
4	20	20	20	25
5	30	30	40	35

Diagram Of Observation/Discharge Point

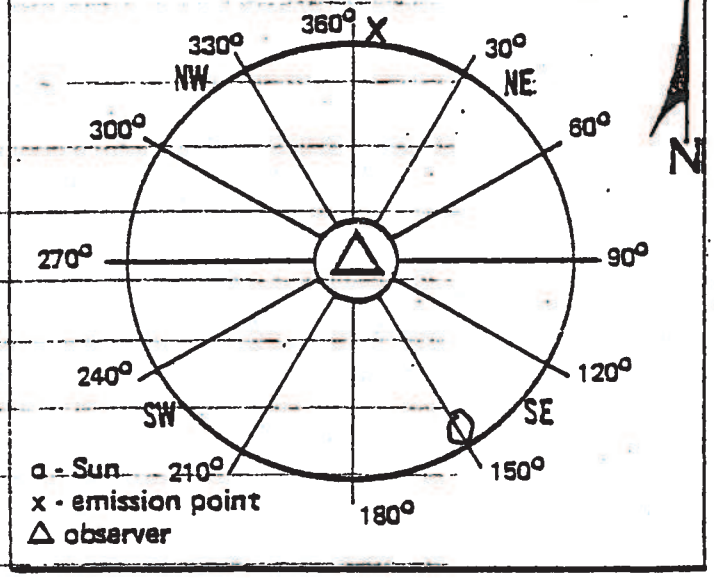

Remarks:

Received By:

HERCULES

Visible Emissions Evaluation Record

Plant Name: Hercules Inc.

Address: West 7th St.

City: Hattiesburg Miss.

Emission Point: 009

Date: 6-15-84

Is emission point operation normal ? _____

V. E. Observer: Bobbie Draughon

Certification Expiration: 10-19-84

Set No.	Time		Opacity	
	Start	End	Sum	Average
1	8:08 Am	8:14	1090	45.4
2	8:14 Am	8:20	480	20.0
3	8:20 Am	8:26	390	16.3

Overall Average: 27.2

	Initial	Final
Distance to discharge	2 Lengths	
Direction to discharge	N	
Height of observation point	Ground	
Height of discharge	200 ft.	
Plume color	Gray	
Plume background	Gray Sky	
Water vapor in plume ?		
Wind direction (from)	NE	
Wind speed	5-10 mph	
Ambient temperature	81°	
Discharge temperature		
Sky conditions	PC	

Min.	Seconds 0	15	30	45
0	40	50	50	60
1	60	50	50	50
2	50	50	40	40
3	40	40	40	35
4	40	40	50	55
5	40	40	40	40
0	35	40	35	30
1	30	30	25	20
2	20	20	25	20
3	15	10	10	10
4	10	10	10	15
5	15	15	15	15
0	15	15	15	15
1	10	10	15	20
2	20	20	30	30
3	15	10	15	15
4	15	15	15	15
5	15	15	15	15

Diagram Of Observation/Discharge Point

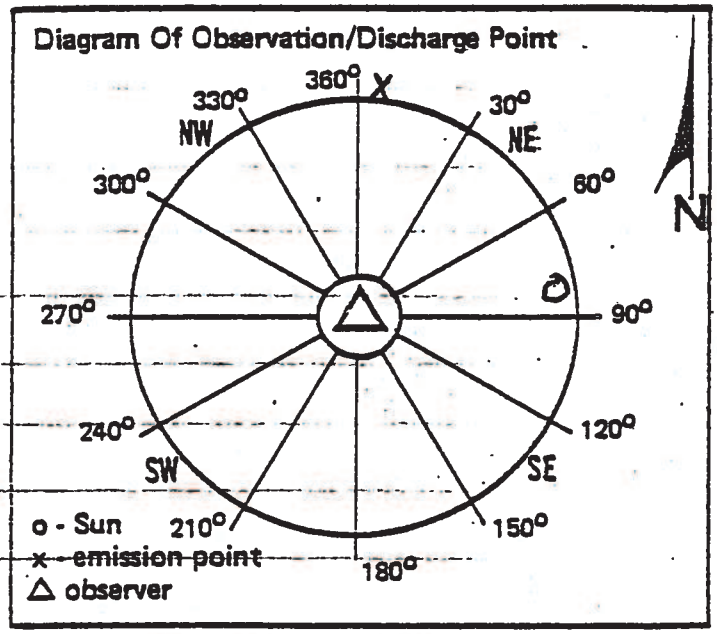

Remarks: _____

Received By: _____

HERCULES

Visible Emissions Evaluation Record

Plant Name: Hercules Inc.

Address: West 7th St.

City: Hattiesburg Miss.

Emission Point: 009

Date: 6-12-84

Is emission point operation normal ? _____

V. E. Observer: Bobbie Draughn

Certification Expiration: 10-19-84

Set No.	Time		Opacity	
	Start	End	Sum	Average
1	9[11] Am	9[17] Am	390	16.3
2	9[17] Am	9[23] Am	850	35.4
3	9[23] Am	9[29] Am	1025	42.7

Overall Average: 31.5

	Initial	Final
Distance to discharge	2 Lengths	
Direction to discharge	N	
Height of observation point	Ground	
Height of discharge	200 ft.	
Plume color	Gray	
Plume background	Blue Sky	
Water vapor in plume ?		
Wind direction (from)	NW	
Wind speed	5-10 mph	
Ambient temperature	86°	
Discharge temperature		
Sky conditions	Pc	

Diagram Of Observation/Discharge Point

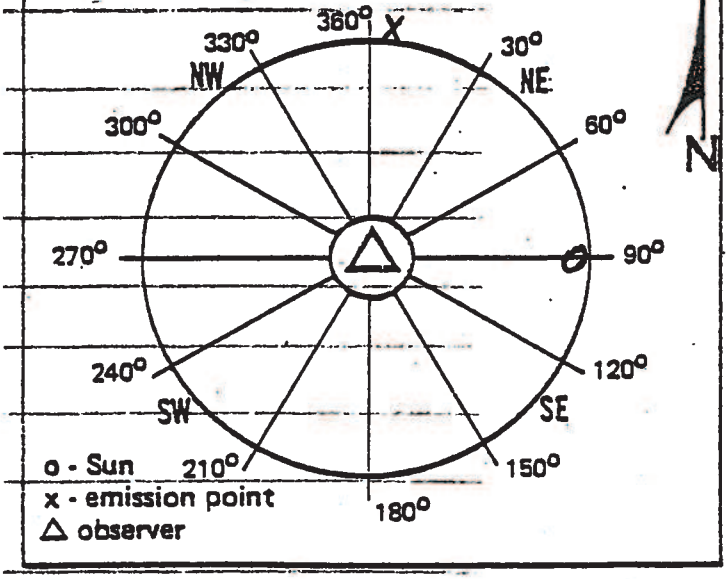

Min.	Seconds 0	15	30	45
0	10	10	15	15
1	15	15	15	15
2	15	15	20	15
3	15	15	15	15
4	15	15	15	15
5	20	25	25	25
0	30	30	30	30
1	30	40	40	30
2	30	30	30	30
3	30	40	40	40
4	40	40	40	40
5	40	40	40	40
0	40	35	35	35
1	40	40	50	50
2	50	50	60	40
3	40	50	50	50
4	40	40	40	40
5	40	40	30	40

Remarks: _____

Received By: _____

HERCULES

Visible Emissions Evaluation Record

Plant Name: Hercules Inc.

Address: West 7th St.

City: Hattiesburg Miss.

Emission Point: 009

Date: 6-8-84

Is emission point operation normal ?

V. E. Observer: Bobbie Draughon

Certification Expiration: 10-19-84

Set No.	Time Start	Time End	Opacity Sum	Opacity Average
1	10^{05} am	10^{11} am	325	13.5
2	10^{11} am	10^{17} am	645	26.9
3	10^{17} am	10^{23} am	985	41.0

Overall Average: 27.1

	Initial	Final
Distance to discharge	2 Lengths	
Direction to discharge	N	
Height of observation point	Ground	
Height of discharge	200 ft.	
Plume color	Gray	
Plume background	Blue Sky	
Water vapor in plume ?		
Wind direction (from)	SE	
Wind speed	10 mph	
Ambient temperature	85°	
Discharge temperature		
Sky conditions	PC	

Min.	Seconds 0	15	30	45
0	10	10	10	10
1	10	10	10	15
2	10	10	10	10
3	15	10	10	15
4	20	20	20	20
5	20	15	15	20
0	15	20	25	30
1	25	30	30	30
2	30	30	30	30
3	30	30	30	30
4	30	20	20	20
5	25	25	25	35
0	30	30	35	35
1	40	40	40	40
2	40	40	30	30
3	30	30	30	40
4	40	50	50	60
5	55	60	50	60

Diagram Of Observation/Discharge Point

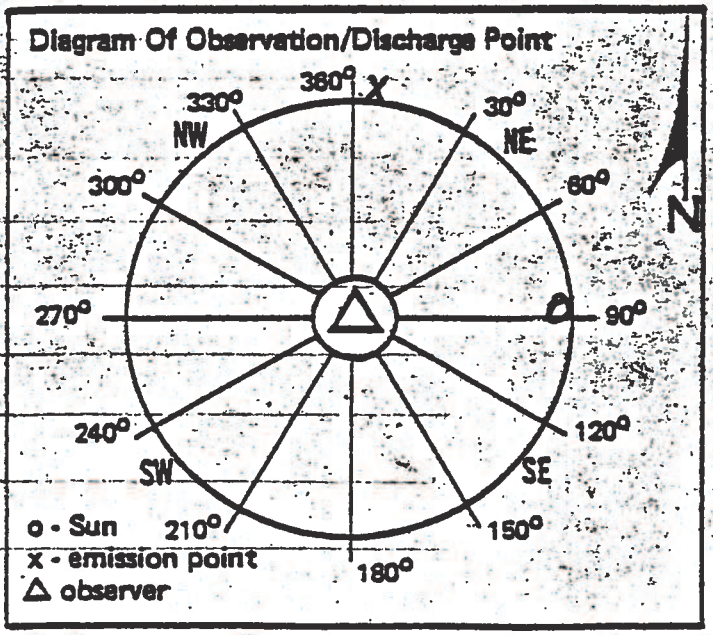

Remarks:

Received By:

DATE 6/15/84

BOILER ROOM ENVIRONMENTAL LOG SHEET

Cleaned Fires		7 - 3 Shift	3 - 11 Shift	11 - Shift
No. 1 Boiler	Started	7:30	3:13	11:
	Stopped	8:40	4:30	12:
No. 2 Boiler	Started	8:55	4:33	12:
	Stopped	10:00	6:00	1:
No. 3 Boiler	Started	11:00	6:30	
	Stopped	12:20	8:40	
No. 4 Boiler	Started	—	9:55	1:
	Stopped	—		2:3

Comments on Boiler Operation

STARTED #4 ON LINE @ 2 PM

OPACITY EVALUATION - WOOD BURNING BOILERS

BOILER NO. 1			BOILER NO. 2			BOILER NO. 3			BOILER NO. 4			
Time	Duration	Note	Time	Duration	Note	Time	Duration	Note	Time	Duration	Note	1.Cleaning B
						1650	35e	3				2.Fuel Oil Adjustment
						700	35e	3				3.Load Chang
						905	35e	6				4.Meter Defe
						1245	35e	3				5.Cleaning M Lenses
			625	4-5	3	932	5-5	5	6:00	3-5	2	6 Chan = 2 B
			1143	1-5	1				7:05	3-5	3	
			215	1-m	2				7:10	4-5	3	
			345	2-m	2	137	2-m	3	339	2-m	2	
						442	2-m	2				

COMMENTS ON OPACITY & METER OPERATION

DATE 6/12/84

BOILER ROOM ENVIRONMENTAL LOG SHEET

Cleaned Fires		7 - 3 Shift	3 - 11 Shift	11 - 7 Shift
No. 1 Boiler	Started			
	Stopped			
No. 2 Boiler	Started	7:20		
	Stopped	9:20		
No. 3 Boiler	Started	1:00	5:30	5:10
	Stopped	1:40	9:00	7:30
No. 4 Boiler	Started		3:30	11:40
	Stopped		5:00	1:20

Comments on Boiler Operation

OPACITY EVALUATION - WOOD BURNING BOILERS

BOILER NO. 1			BOILER NO. 2			BOILER NO. 3			BOILER NO. 4			
Time	Duration	Note	Time	Duration	Note	Time	Duration	Note	Time	Duration	Note	1.Cleaning Bo
									8:22	6 Sec.	2	2.Fuel Oil Adjustment
									12:14 PM	2 1/2 M	1	3.Load Changes
												4.Meter Defect
												5.Cleaning Met Lenses
												6. Wood

COMMENTS ON OPACITY & METER OPERATION

DATE 6-26-84

BOILER ROOM ENVIRONMENTAL LOG SHEET

Cleaned Fires		7 - 3 Shift	3 - 11 Shift	11 - Shift
No. 1 Boiler	Started	OUT		
	Stopped			
No. 2 Boiler	Started	11:00	7:15	3:45
	Stopped	12:25	8:	4:50
No. 3 Boiler	Started	7:20	3:30	11:15
	Stopped	8:55	5:00	12:2
No. 4 Boiler	Started	9:30	5:30	12:4
	Stopped	10:30		1:50

Comments on Boiler Operation

OPACITY EVALUATION - WOOD BURNING BOILERS

BOILER NO. 1			BOILER NO. 2			BOILER NO. 3			BOILER NO. 4			
Time	Duration	Note	Time	Duration	Note	Time	Duration	Note	Time	Duration	Note	1.Cleaning Bo
			11:00	10-S	3	11:36	30-S	1	1:39	20-S	1	2.Fuel Oil Adjustment
						3:52	10-S	3	11:10	20-S	3	3.Load Change
									3:05	20-S	3	4.Meter Defec
												5.Cleaning Me Lenses
												6. Wood

COMMENTS ON OPACITY & METER OPERATION

Hercules Incorporated
West 7th Street
P.O. Box 1937
Hattiesburg, MS 39401
(601) 545-3450

June 12, 1984

Mr. Dwight K. Wylie, P.E. Cheif
Air Division
Bureau of Pollution Control
P. O. Box 10385
Jackson, Mississippi 39209

Dear Mr. Wylie:

In reference to operating Permit No. 0800-0001, please find the attached monthly report detailing the compliance status of the boilers for emission points 009 and 010.

Our revised Power House Environmental Log Sheet is now in use for June.

We will continue to submit this report on a monthly basis.

Very truly yours,

Charles Jordan
Environmental Supervisor

CSJ:sw

Attachments

HERCULES

Interoffice Memo

Hattiesburg, Mississippi
June 5, 1984

To: C. S. Jordan

From: L. C. Polk

Operating Permit No. 0800-00001 Hattiesburg, MS
Issued For The Operation Of Air Emissions Equipment

In reference to the above permit, Part III, Other Requirements, 1-C, the following monthly report is for May 1984.

The report details the compliance status of the boilers with copies of all visible emissions evaluations in which any reading exceeds 40% opacity.

Number of VEE copies attached = 17.

In addition, copies of log sheets and opacity meter sheets are attached for all visible emission evaluations when opacity exceeds 40% for two minutes or more.

L. C. Polk

LCP:ml
0239N

Attachment

5/17/82

BOILER ROOM LOG SHEET

Date 5-30-84

ITEM		7-3 SHIFT
ned fires No. 1 Boiler	Started	
	Stopped	X
ned fires No. 2 Boiler	Started	7:00
	Stopped	8:40
ned fires No. 3 Boiler	Started	9:15
	Stopped	10:45
ned fires No. 4 Boiler	Started	11:50
	Stopped	1:30
ked. FTy Ash Hoppers	No. 1 Boiler	
	No. 2 Boiler	✓
	No. 3 Boiler	✓
	No. 4 Boiler	✓
due Received - Gal.		

	No. 1	No. 2	No. 3	No. 4
due Burned - Boilers				
il Burned - Boilers				

idue Remaining In S-89 _____ (M Gal.). 72% at 68°

ents:

METER READINGS

it	Start	End	Diff.
	—		
	16446	18866	2420
	63887	66873	2986
	67387	69783	2400
	—		
Gas	239533	239533	0
as	—		
il	—		
N	36744	36745	1
S	95176	95176	0

790,600

PERSONNEL

Fireman BUNCH
#1 Ash Roller PRICE
#2 Ash Roller [illegible]
Fuel House GRAY
#2 Helper WATTS

Start 6 AM - End 2 PM)
Start 2 PM - End 10 PM)
Start 10 PM - End 6 AM)

Read meters at these times

Total Steam 93183

TOTAL GAS 0

#2 28079
#3 35246
#4 29858

5/17/82

BOILER ROOM LOG SHEET

Date

ITEM		SHIFT
eaned fires No. 1 Boiler	Started	12:15
	Stopped	1:15
eaned fires No. 2 Boiler	Started	7:00
	Stopped	8:00
eaned fires No. 3 Boiler	Started	8:20
	Stopped	9:45
eaned fires No. 4 Boiler	Started	X
	Stopped	
ecked Fly Ash Hoppers	No. 1 Boiler	✓
	No. 2 Boiler	✓
	No. 3 Boiler	✓
	No. 4 Boiler	✓
idue Received - Gal.		

idue Burned - Boilers	No. 1	No. 2	No. 3	No. 4
Oil Burned - Boilers				

sidue Remaining In S-89 _____ (M Gal.).

mments:

METER READINGS

nit	Start	End	Diff.
	25462	26803	1341
	10390	12648	2258
	54767	57534	2767
	61553	62658	1105
	—		
. Gas	239533	239533	0
Gas	—		
Oil	—		
4	36735	36735	2
5	95175	95175	2
al			

74,702

PERSONNEL

Fireman BUNCH
#1 Ash Roller PRICE
#2 Ash Roller BLAKE
Fuel House JOHNNIE
#2 Helper WATTS

3 Start 6 AM - End 2 PM)
1 Start 2 PM - End 10 PM)
7 Start 10 PM - End 6 AM)

Read meters at these times

#1 5588
#2 25233
#5 38003

TOTAL STEAM
TOTAL ELEC 0

93113

5/17/82 BOILER ROOM LOG SHEET Date [illegible]

ITEM					SHIFT
aned fires No. 1 Boiler	Started				12:00
	Stopped				1:15
aned fires No. 2 Boiler	Started				7:00
	Stopped				8:00
aned fires No. 3 Boiler	Started				8:30
	Stopped				9:45
aned fires No. 4 Boiler	Started				10:20
	Stopped				11:45
cked Fly Ash Hoppers	No. 1 Boiler				✓
	No. 2 Boiler				✓
	No. 3 Boiler				✓
	No. 4 Boiler				✓
idue Received - Gal.					
idue Burned - Boilers	No. 1	No. 2	No. 3	No. 4	
Oil Burned - Boilers					

sidue Remaining In S-89 _____ (M Gal.). [illegible]

ments:

METER READINGS

nit	Start	End	Diff.
	[illegible]	04897	1901
	87911	90005	2994
	26[illegible]	28648	2261
	38[illegible]85	40786	2101
	—		
. Gas	239533	234533	0
Gas	—		
Oil	—		
	36722	36726	4
S	95144	95150	6
al			

PERSONNEL

Fireman [illegible]
#1 Ash Roller [illegible]
#2 Ash Roller [illegible]
Fuel House Richardson
#2 Helper Jackson

925,700

3 Start 6 AM - End 2 PM)
1 Start 2 PM - End 10 PM) Read meters at these times
7 Start 10 PM - End 6 AM)

#1 25125
#2 22771
#3 26933
#4 26[illegible]

TOTAL STEAM 101+95

TOTAL GAS 0

8
. 5/17/82

BOILER ROOM LOG SHEET

Date 5-24-84

ITEM			7-3 SHIFT
eaned fires No. 1 Boiler		Started	11:45
		Stopped	1:30
eaned fires No. 2 Boiler	Start	Started	7:00
		Stopped	8:00
eaned fires No. 3 Boiler		Started	10:30
		Stopped	11:30
eaned fires No. 4 Boiler	Out	Started	
		Stopped	
ecked Fly Ash Hoppers		No. 1 Boiler	✓
		No. 2 Boiler	✓
		No. 3 Boiler	
		No. 4 Boiler	✓
idue Received - Gal.			
idue Burned - Boilers		No. 1	No. 2	No. 3	No. 4
Oil Burned - Boilers					

sidue Remaining In S-89 _____ (M Gal.). [illegible] at 6 [illegible]

ments:

METER READINGS

it	Start	End	Diff.
	96858	98440	1582
	82804	85574	2770
	17462	20948	3486
	33960	34294	334
	—		
Gas	238840	239533	693
as	—	—	
il	—	—	
N	36721	36721	0
S	95127	95140	13
l			

817200

PERSONNEL

Fireman Foster
#1 Ash Roller Mosely, Conerly
#2 Ash Roller McCullum
Fuel House Russell
#2 Helper None

Start 6 AM - End 2 PM)
Start 2 PM - End 10 PM)
Start 10 PM - End 6 AM)

Read meters at these times

#1 25575
#2 21279
#3 37188
#4 19683

TOTAL STEAM - 103730

TOTAL GAS 69

-48
ev. 5/17/82

BOILER ROOM LOG SHEET

Date 5-14-84

ITEM					7-3 SHIFT
Cleaned fires No. 1 Boiler		Started			12:35
		Stopped			1:45
Cleaned fires No. 2 Boiler	Start	Started			7:05
		Stopped			9:00
Cleaned fires No. 3 Boiler		Started			9:20
		Stopped			10:45
Cleaned fires No. 4 Boiler		Started			11:10
		Stopped			12:05
Checked Fly Ash Hoppers		No. 1 Boiler			✓
		No. 2 Boiler			✓
		No. 3 Boiler			✓
		No. 4 Boiler			✓
Residue Received - Gal.	none				
Residue Burned - Boilers		No. 1 7 HRS.	No. 2	No. 3	No. 4 7 HRS.
#6 Oil Burned - Boilers		0	0	0	0

Residue Remaining In S-89 5,000 ([redacted] Gals.). [illegible]

46% at 2:00 p.m.

Comments:

987,000

METER READINGS

Unit	Start	End	Diff.
#1	24262	26892	2630
#2	28343	29913	1570
#3	31541	34471	2930
#4	67465	70205	2740
#5			
Tot. Gas	233941	233941	0
#5 Gas			
#5 Oil			
N	36678	36678	0
S	95049	95054	5
Total			

987,000

PERSONNEL

Fireman Mathany
#1 Ash Roller Smith
#2 Ash Roller Horne
Fuel House Fiskale
#2 Helper Gray

7-3 Start 6 AM - End 2 PM)
-11 Start 2 PM - End 10 PM) Read meters at these times
1-7 Start 10 PM - End 6 AM)

#1 32017
#2 21604
#3 36858
#4 [illegible]

TOTAL STEAM 123629
TOTAL GAS 0

S-48
Rev. 5/17/82

BOILER ROOM LOG SHEET

Date 5-11-84

ITEM		SHIFT 7-
Cleaned fires No. 1 Boiler	Started	
	Stopped	
Cleaned fires No. 2 Boiler out	Started	
	Stopped	
Cleaned fires No. 3 Boiler start	Started	7 : 1
	Stopped	8 : 5
Cleaned fires No. 4 Boiler	Started	8 : 5
	Stopped	0 : 0
Checked Fly Ash Hoppers	No. 1 Boiler	
	No. 2 Boiler	
	No. 3 Boiler	
	No. 4 Boiler	
Residue Received - Gal.		
Residue Burned - Boilers	No. 1 ✓	No. 2 — No. 3 ✓ — No. ✓
#6 Oil Burned - Boilers		

Residue Remaining In S-89 _____ (M Gal.). 68% at 6:AM
63% at 2:PM.

Comments:

METER READINGS

Unit	Start	End	Diff.
#1	99087	01780	2693
#2	X	X	X
#3	02931	06467	3536
#4	43217	45940	2723
#5	X	X	X
Tot. Gas	230028	230870	842
#5 Gas	X	X	X
#5 Oil	X	X	X
N	36674	36674	0
S	95047	95047	0
Total			

PERSONNEL

Fireman [illegible]
#1 Ash Roller Smith
#2 Ash Roller [illegible]
Fuel House Russell
#2 Helper [illegible]

$95200

7-3 Start 6 AM - End 2 PM)
3-11 Start 2 PM - End 10 PM)
11-7 Start 10 PM - End 6 AM)

Read meters at these times

#1 37650
#3 02608
#4 [illegible]

TOTAL STEAM 116154
TOTAL GAS 88

OPACITY EVALUATION - WOOD BURNING BOILERS

Date 5 2 6 84

Boiler No. 1			Boiler No. 2			Boiler No. 3			Boiler No. 4		
Time	Duration	Note	Time	Duration	Note	Time	Duration	Note	Time	Duration	Note

NOTES:

1. Load change.
2. Fuel oil adj ment.
3. Cleaning fu
4. Meter defec
5. Cleaning me lenses.

M = Minutes

S = Seconds

OPACITY EVALUATION - WOOD BURNING BOILERS

Date 5-25-84

Boiler No. 1			Boiler No. 2			Boiler No. 3			Boiler No. 4		
Time	Duration	Note	Time	Duration	Note	Time	Duration	Note	Time	Duration	Note
12:07	5 Min	3							10:52	5 Min	3
12:12	4 Sec	3									

NOTES:

1. Load change.
2. Fuel oil adju ment.
3. Cleaning furn
4. Meter defect.
5. Cleaning mete lenses.

M = Minutes

S = Seconds

OPACITY EVALUATION - WOOD BURNING BOILERS

Date 5-24-84
7-3

Boiler No. 1			Boiler No. 2			Boiler No. 3			Boiler No. 4		
Time	Duration	Note	Time	Duration	Note	Time	Duration	Note	Time	Duration	Note
8:45	2 Min	1				7:03	10 Sec	1	9:00	2 hrs	Start Boiler-up
12:50	10 Min	3									
1:50	10 Sec	5									

NOTES:

1. Load change.
2. Fuel oil adjustment.
3. Cleaning fu[illegible]c
4. Meter defect.
5. Cleaning meter lenses.

M = Minutes

S = Seconds

OPACITY EVALUATION - WOOD BURNING BOILERS

Date 5-14-8[illegible]
7-3

Boiler No.			Boiler No. 2			Boiler No. 3			Boiler No. 4		
Time	Duration	Note	Time	Duration	Note	Time	Duration	Note	Time	Duration	Note
12155	20sec.	(2)	10:15	20 Sec.	(1)				10:16	10 sec.	(2)

NOTES:

1. Load change.
2. Fuel oil adju ment.
3. Cleaning f
4. Meter defect.
5. Cleaning mete lenses.

OPACITY EVALUATION - WOOD BURNING BOILERS

Date 5-11-84

7-3

Boiler No. 1			Boiler No. 2			Boiler No. 3			Boiler No. 4		
Time	Duration	Note	Time	Duration	Note	Time	Duration	Note	Time	Duration	Note
	0			0			0			0	

NOTES:

1. Load change.
2. Fuel oil adjustment.
3. Cleaning furnace
4. Meter defect.
5. Cleaning meter lenses.

Visible Emissions Evaluation Record

Plant Name: Hercules Inc

Address: West 7th St

City: Hattiesburg Miss

Emission Point: 009

Date: 5-3-84

Is emission point operation normal ? _____

V. E. Observer: Bobbie Draughon

Certification Expiration: _____

Set No.	Time Start	Time End	Opacity Sum	Opacity Average
1	12 00 PM	12 06 PM	345	14.4
2	12 06 PM	12 12 PM	300	12.5
3	12 12 PM	12 18 PM	830	34.6

Overall Average: 20.5

	Initial	Final
Distance to discharge	2 Lengths	
Direction to discharge	N	
Height of observation point	Ground	
Height of discharge	200 ft	
Plume color	Gray	
Plume background	Gray Sky	
Water vapor in plume ?		
Wind direction (from)	SW	
Wind speed	10-20 mph	
Ambient temperature	84°	
Discharge temperature		
Sky conditions	Cloudy	

Min.	Seconds 0	15	30	45
0	15	15	10	10
1	15	35	40	30
2	15	15	10	10
3	10	10	10	10
4	10	10	10	10
5	10	10	15	10
0	10	10	10	10
1	10	10	10	10
2	10	10	10	10
3	10	10	10	10
4	10	10	10	30
5	40	30	5	5
0	5	5	10	15
1	20	30	35	40
2	30	40	50	50
3	50	40	50	50
4	50	40	40	40
5	50	30	30	30

Diagram Of Observation/Discharge Point

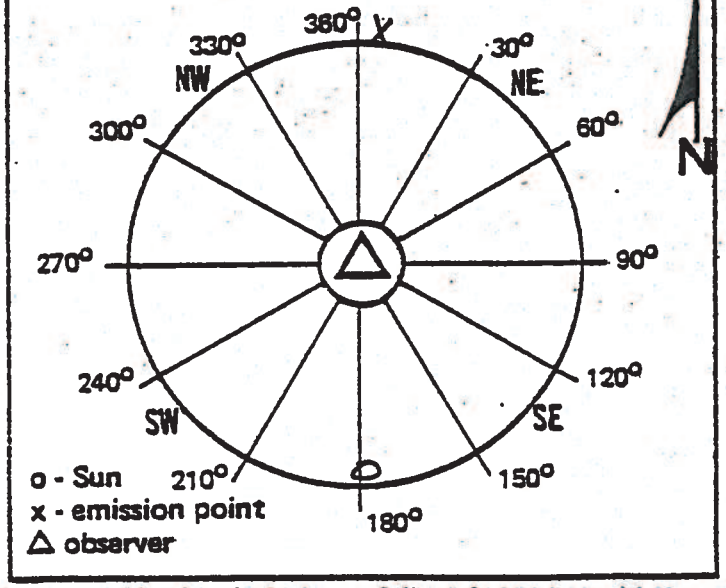

Remarks: Cleaning #1 Boiler.

START 11:45

STOP 12:50

Received By: _____

HERCULES

Visible Emissions Evaluation Record

Plant Name: Hercules Inc.

Address: West 7th St.

City: H'burg. Miss

Emission Point: 010

Date: 5-11-84

Is emission point operation normal ? _____

V. E. Observer: Bobbie Draughn

Certification Expiration: _____

Set No.	Time		Opacity	
	Start	End	Sum	Average
1	9 57 Am	10 03 Am	1275	53.1
2	10 03 Am	10 09	1185	49.4
3	10 09	10 15 Am	885	36.9

Overall Average: 46.5

	Initial	Final
Distance to discharge	2 Lengths	
Direction to discharge	N	
Height of observation point	Ground	
Height of discharge	225 ft.	
Plume color	Gray	
Plume background	Blue Sky	
Water vapor in plume?		
Wind direction (from)	SW	
Wind speed	5-10 mph	
Ambient temperature	80°	
Discharge temperature		
Sky conditions	Clear	

Diagram Of Observation/Discharge Point

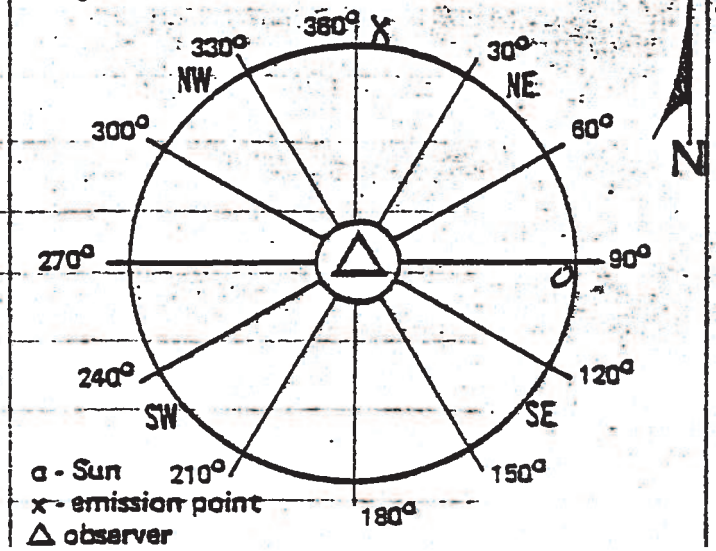

Min.	Seconds 0	15	30	45
0	40	30	30	30
1	70	30	70	75
2	60	60	60	70
3	60	60	60	60
4	60	50	40	40
5	35	35	50	50
0	50	70	70	50
1	60	55	50	55
2	45	40	40	40
3	50	50	60	60
4	60	40	40	40
5	40	40	40	40
0	40	40	35	30
1	30	35	35	40
2	50	50	40	30
3	40	40	35	35
4	30	30	35	35
5	35	40	40	35

Remarks: Trying to adjust fuel oil. Cleaning # 4 Boiler

HERCULES

Visible Emissions Evaluation Record

Plant Name: Hercules Inc.

Address: West 7th St.

City: Hattiesburg Miss.

Emission Point: 009

Date: 5-11-84

Is emission point operation normal ?

V. E. Observer: Bobbie Draughon

Certification Expiration:

Set No.	Time Start	Time End	Opacity Sum	Opacity Average
1	9[57] Am	10[03] Am	880	36.7
2	10[09] Am	10[69]	1035	43.1
3	10[09]	10[15]	915	38.1

Overall Average: 39.3

	Initial	Final
Distance to discharge	2 Lengths	
Direction to discharge	N	
Height of observation point	Ground	
Height of discharge	200 ft.	
Plume color	Gray	
Plume background	Blue Sky	
Water vapor in plume?		
Wind direction (from)	SW	
Wind speed	5-10 mph	
Ambient temperature	80°	
Discharge temperature		
Sky conditions	Clear	

Min.	Seconds 0	15	30	45
0	15	25	30	30
1	30	25	25	30
2	60	50	40	40
3	40	40	40	50
4	40	40	40	40
5	40	40	35	35
6	50	40	50	40
7	50	40	40	35
8	35	35	35	40
9	40	50	45	50
10	40	40	40	40
11	40	60	55	45
12	40	40	40	50
13	50	40	45	40
14	35	35	40	40
15	40	40	35	35
16	35	30	30	35
17	35	35	35	35

Diagram Of Observation/Discharge Point

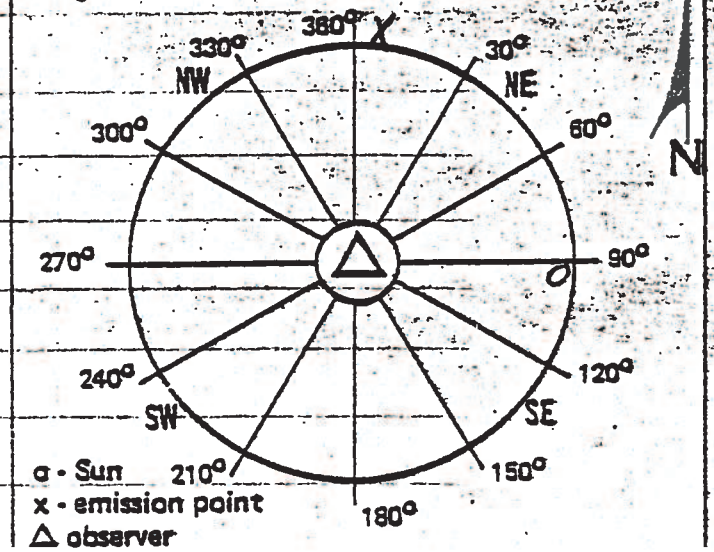

Remarks: Trying to adjust fuel oil.

Visible Emissions Evaluation Record

Plant Name: Hercules Inc.

Address: West 7th St.

City: Hattiesburg Miss.

Emission Point: 009

Date: 5-14-84

Emission point operation normal ? _____

V. E. Observer: Bobbie Draughn

Certification Expiration: _____

Set No.	Time		Opacity	
	Start	End	Sum	Average
1	12 55 pm	1 0 pm	1760	73.3
2	1 0 pm	1 0 pm	1445	60.2
3	1 0 pm	1 0 pm	980	40.8

Overall Average: 58.1

	Initial	Final
Distance to discharge	2 Lengths	
Direction to discharge	N	
Height of observation point	Ground	
Height of discharge	200 ft.	
Plume color	Gray	
Plume background	Gray Sky.	
Water vapor in plume ?		
Wind direction (from)	N	
Wind speed	5 mph	
Ambient temperature	88°	
Discharge temperature		
Sky conditions	Pc	

Min.	Seconds 0	15	30	45
0	80	70	60	70
1	70	80	90	90
2	80	80	70	70
3	80	100	90	75
4	70	60	60	50
5	65	60	70	70
0	75	60	70	70
1	70	70	70	70
2	60	70	70	60
3	60	60	60	50
4	50	50	50	50
5	50	50	50	50
0	50	45	50	50
1	45	40	40	40
2	40	40	40	40
3	40	40	40	40
4	40	40	40	35
5	40	35	35	35

Diagram Of Observation/Discharge Point

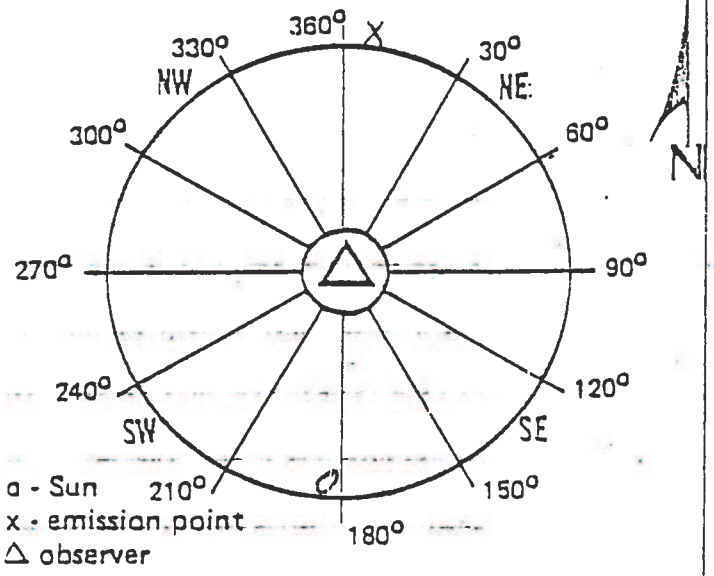

Remarks: Cleaning #1 Boiler
Start 12:35
Stop 1:45

Received By: _____

Visible Emissions Evaluation Record

Plant Name: Hercules Inc.

Address: West 7th St.

City: Hattiesburg Miss

Emission Point: 010

Date: 5-14-84

Is emission point operation normal ? _____

V. E. Observer: Bobbie Draughn

Certification Expiration: _____

Set No.	Time		Opacity	
	Start	End	Sum	Average
1	12 55 PM	1 01 PM	565	23.6
2	1 01 PM	1 07 PM	265	11.1
3	1 07 PM	1 13 PM	430	17.9

Overall Average: 17.5

	Initial	Final
Distance to discharge	2 Lengths	
Direction to discharge	N	
Height of observation point	Ground	
Height of discharge	225 ft.	
Plume color	Gray	
Plume background	Gray	Sky
Water vapor in plume ?		
Wind direction (from)	N	
Wind speed	5 mph	
Ambient temperature	88°	
Discharge temperature		
Sky conditions	PC	

	Seconds			
Min.	0	15	30	45
0	20	30	50	75
1	60	50	40	40
2	20	15	15	15
3	10	10	10	10
4	15	10	10	10
5	10	10	15	15
0	15	10	10	15
1	15	15	10	10
2	10	15	10	10
3	10	10	10	10
4	10	10	10	10
5	10	10	10	10
0	10	10	10	10
1	10	10	10	10
2	15	15	15	15
3	10	10	10	15
4	20	25	30	40
5	30	30	35	35

Diagram Of Observation/Discharge Point

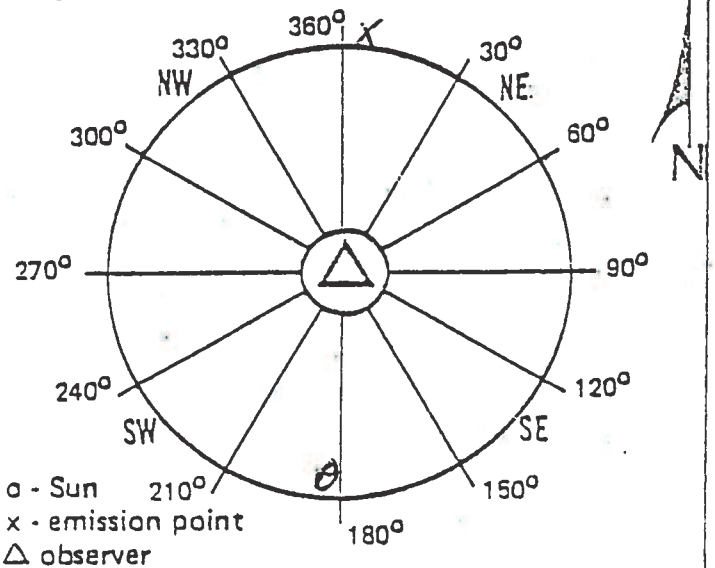

Remarks: _____

Received By: _____

Visible Emissions Evaluation Record

Plant Name: Hercules Inc.

Address: West 7th St.

City: H'burg Miss

Emission Point: 010

Date: 5-15-84

Is emission point operation normal ? _____

V. E. Observer: Bobbie Draughn

Certification Expiration: _____

Set No.	Time		Opacity	
	Start	End	Sum	Average
1	9^05 Am	9^11 Am	860	35.8
2	9^11 Am	9^17 Am	920	38.3
3	9^17 Am	9^23 Am	720	30.0

Overall Average: 34.7

	Initial	Final
Distance to discharge	2 Lengths	
Direction to discharge	N	
Height of observation point	Ground	
Height of discharge	225 ft.	
Plume color	Gray	
Plume background	Blue Sky	
Water vapor in plume ?		
Wind direction (from)	East	
Wind speed	10-15 mph	
Ambient temperature	74°	
Discharge temperature		
Sky conditions	Clear	

Min.	Seconds 0	15	30	45
0	30	30	30	30
1	35	35	35	35
2	35	35	35	35
3	40	35	35	35
4	40	35	40	40
5	40	40	40	40
0	40	40	40	40
1	35	35	35	35
2	40	35	35	35
3	35	35	40	60
4	50	40	40	35
5	35	35	35	35
0	40	40	40	30
1	30	25	25	20
2	20	25	20	20
3	20	20	20	20
4	25	25	25	40
5	60	50	40	40

Diagram Of Observation/Discharge Point

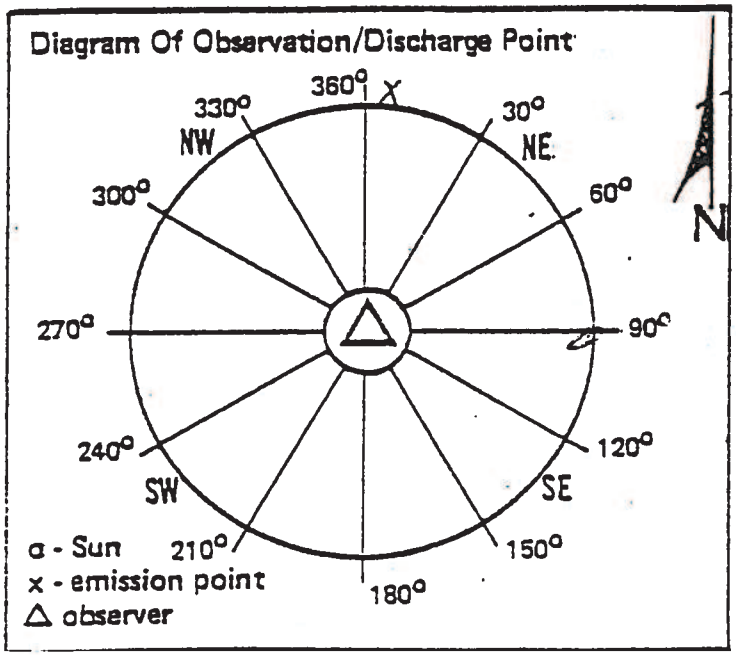

Remarks:

Clean #3 Boiler

Start 8:54

Stop 10:30

Received By: _____

HERCULES

Visible Emissions Evaluation Record

Plant Name: Hercules Inc.

Address: West 7th St.

City: Hattiesburg Miss

Emission Point: 010

Date: 5-16-84

Is emission point operation normal ? _____

V. E. Observer: Bobbie Draughn

Certification Expiration: _____

Set No.	Time Start	Time End	Opacity Sum	Opacity Average
1	11^00 Am	11^06 Am	620	25.8
2	11^06 Am	11^12 Am	850	35.4
3	11^12 Am	11^18 Am	970	40.4

Overall Average: 33.9

	Initial	Final
Distance to discharge	2 Lengths	
Direction to discharge	N	
Height of observation point	Ground	
Height of discharge	225 ft.	
Plume color	Gray	
Plume background	Blue Sky	
Water vapor in plume ?		
Wind direction (from)	SE	
Wind speed	10 mph	
Ambient temperature	76°	
Discharge temperature		
Sky conditions	Clear	

Min.	Seconds 0	15	30	45
0	20	20	20	25
1	25	25	20	25
2	25	25	25	20
3	25	25	25	25
4	25	30	30	30
5	30	30	35	35
0	35	40	40	35
1	35	35	35	35
2	35	35	30	30
3	30	30	30	30
4	35	40	40	40
5	35	40	40	40
0	40	50	50	45
1	45	45	45	40
2	40	40	35	35
3	40	40	40	40
4	35	35	35	40
5	40	40	35	40

Diagram Of Observation/Discharge Point

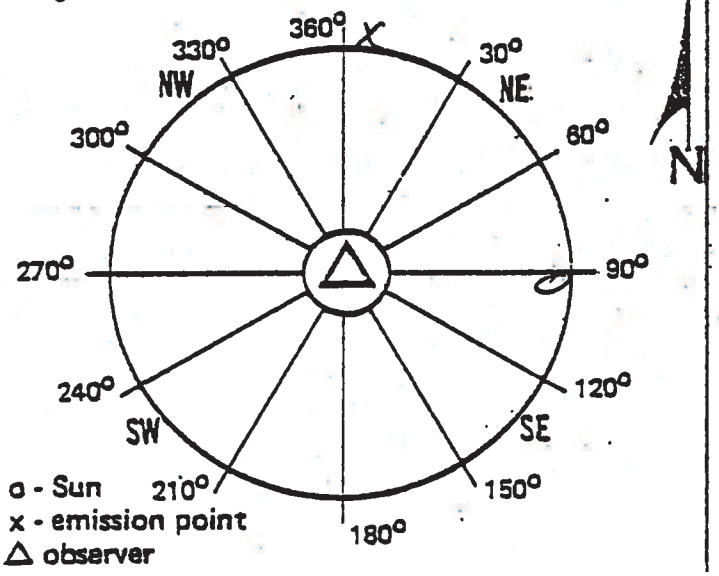

Remarks: Cleaning #4 Boiler

Start 10:45

Stop 12:00

Visible Emissions Evaluation Record

Plant Name: Hercules Inc.

Address: West 7th St.

City: Hattiesburg Miss

Emission Point: 010

Date: 5-18-84

Is emission point operation normal ? _____

V. E. Observer: Bobbie Draughn

Certification Expiration: _____

Set No.	Time		Opacity	
	Start	End	Sum	Average
1	10 55 Am	11 01 Am	1220	50.8
2	11 01 Am	11 07 Am	345	14.4
3	11 07 Am	11 13 Am	405	16.9

Overall Average: 27.4

	Initial	Final
Distance to discharge	2 Lengths	
Direction to discharge	N	
Height of observation point	Ground	
Height of discharge	225 ft.	
Plume color	Gray	
Plume background	Blue Sky	
Water vapor in plume ?		
Wind direction (from)	SE	
Wind speed	5-10 mph	
Ambient temperature	83°	
Discharge temperature		
Sky conditions	PC	

Min.	Seconds 0	15	30	45
0	100	100	90	70
1	50	50	50	50
2	60	70	70	70
3	30	25	25	25
4	25	25	25	25
5	60	60	40	25
0	25	20	20	15
1	15	15	15	15
2	15	15	15	15
3	15	15	15	15
4	15	15	10	10
5	10	10	5	10
0	10	10	10	10
1	10	15	15	15
2	15	15	15	20
3	15	15	15	15
4	15	20	20	30
5	25	25	25	25

Diagram Of Observation/Discharge Point

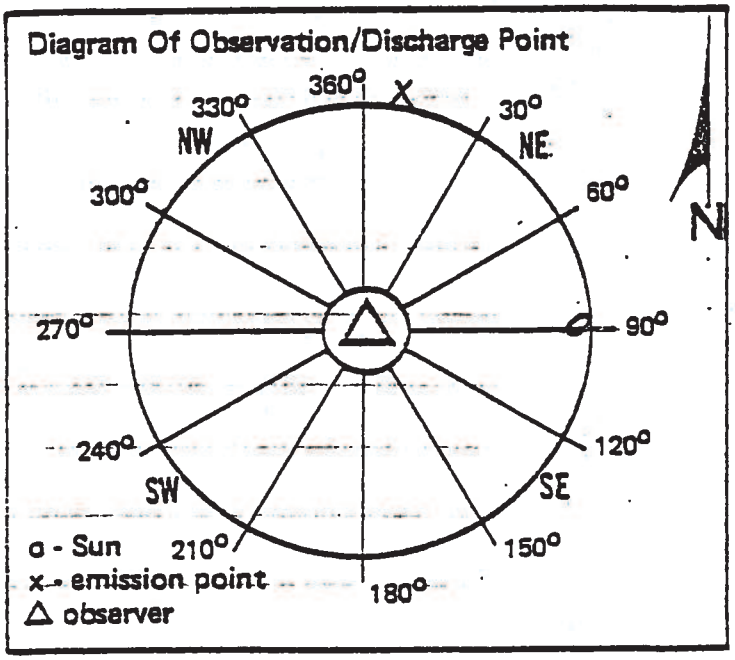

Remarks: Cleaning #4 Boiler
START 10:20
STOP 11:10

Received By: _____

Visible Emissions Evaluation Record

Plant Name: Hercules Inc.

Address: West 7th St.

City: Hattiesburg Miss.

Emission Point: 009

Date: 5-18-84

Is emission point operation normal ? _____

V. E. Observer: Bobbie Draughn

Certification Expiration: _____

Set No.	Time Start	Time End	Opacity Sum	Opacity Average
1	10 55 Am	11 01 Am	1015	42.3
2	11 01 Am	11 07 Am	580	24.2
3	11 07 Am	11 13 Am	400	16.7

Overall Average: 27.7

	Initial	Final
Distance to discharge	2 Lengths	
Direction to discharge	N	
Height of observation point	Ground	
Height of discharge	200 ft.	
Plume color	Gray	
Plume background	Blue Sky	
Water vapor in plume ?		
Wind direction (from)	SE	
Wind speed	5-10 mph	
Ambient temperature	83°	
Discharge temperature		
Sky conditions	PC	

Min.	Seconds 0	15	30	45
0	10	10	80	100
1	80	60	60	50
2	50	45	40	35
3	35	35	35	40
4	40	35	35	30
5	30	25	25	30
0	40	40	30	30
1	25	25	25	25
2	25	25	25	25
3	30	25	25	25
4	25	20	15	15
5	15	15	15	15
0	20	20	15	10
1	10	10	10	15
2	15	15	10	10
3	15	15	15	15
4	20	25	20	25
5	20	20	25	25

Diagram Of Observation/Discharge Point

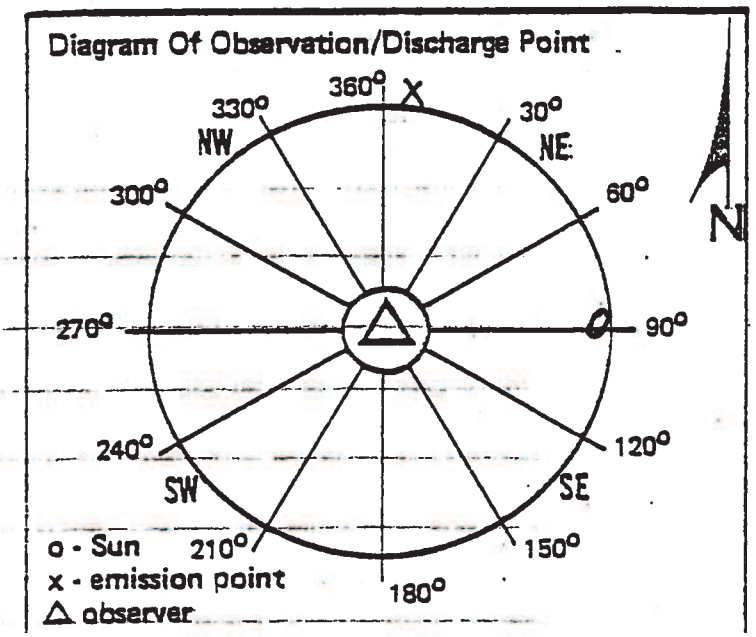

Remarks: _____

Visible Emissions Evaluation Record

Plant Name: Hercules Inc.

Address: West 7th St.

City: Hattiesburg Miss.

Emission Point: 009

Date: 5-23-84

Is emission point operation normal ? _____

V. E. Observer: Bobbie Draughon

Certification Expiration: 10-19-84

Set No.	Time		Opacity	
	Start	End	Sum	Average
1	9⁰⁰ Am	9⁰⁶ Am	615	25.6
2	9⁰⁶ Am	9¹² Am	750	31.3
3	9¹² Am	9¹⁸ Am	875	36.5

Overall Average: 31.1

	Initial	Final
Distance to discharge	2 Lengths	
Direction to discharge	N	
Height of observation point	Ground	
Height of discharge	200 ft.	
Plume color	Gray	
Plume background	Blue Sky	
Water vapor in plume ?		
Wind direction (from)	NW	
Wind speed	5 mph	
Ambient temperature	77°	
Discharge temperature		
Sky conditions	PC	

Diagram Of Observation/Discharge Point

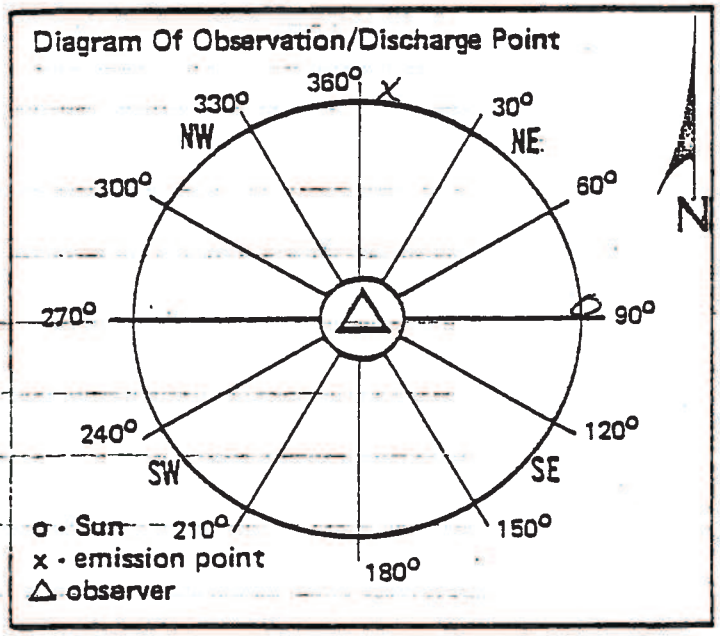

Min.	Seconds 0	15	30	45
0	25	25	30	30
1	25	25	20	20
2	20	15	15	20
3	25	25	30	30
4	30	35	30	30
5	25	25	20	40
0	60	60	40	35
1	40	40	35	35
2	25	25	25	25
3	25	25	30	25
4	25	25	25	25
5	25	25	25	25
0	30	30	30	30
1	35	35	40	40
2	35	35	30	30
3	35	35	40	50
4	40	50	40	45
5	40	35	35	30

Remarks: Claiming #2 Boiler
Start 7:15
Stop 9:00

Received By: _____

Visible Emissions Evaluation Record

Plant Name: Hercules Inc.

Address: West 7th St.

City: Hattiesburg Miss

Emission Point: 010

Date: 5-24-84

Is emission point operation normal ? _____

V. E. Observer: Bobbie Draughn

Certification Expiration: 10-19-84

Set No.	Time Start	Time End	Opacity Sum	Opacity Average
1	11 03 Am	11 09 Am	1155	48.1
2	11 09 Am	11 15 Am	1485	61.9
3	11 15 Am	11 21 Am	1085	45.2

Overall Average: 51.7

	Initial	Final
Distance to discharge	2 Lengths	
Direction to discharge	N	
Height of observation point	Ground	
Height of discharge	225 ft.	
Plume color	Gray	
Plume background	Blue Sky	
Water vapor in plume ?		
Wind direction (from)	SE	
Wind speed	5 mph	
Ambient temperature	86°	
Discharge temperature		
Sky conditions	PC	

Diagram Of Observation/Discharge Point

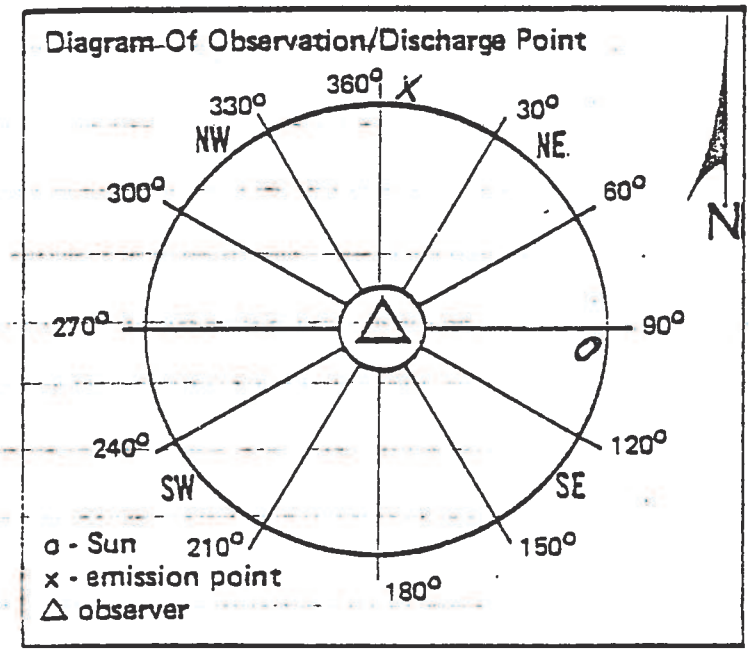

Min.	Seconds 0	15	30	45
0	40	40	40	50
1	50	50	45	45
2	40	40	40	40
3	40	50	50	50
4	50	50	50	50
5	60	60	55	70
0	70	60	65	60
1	60	50	50	60
2	50	60	70	80
3	75	70	70	70
4	70	60	60	60
5	55	50	50	60
0	60	60	50	50
1	50	50	60	70
2	30	40	40	40
3	50	50	60	50
4	25	30	40	40
5	30	30	40	40

Remarks: Cleaning #3 Boiler

Start 10:30

Stop 11:35

Received By: _____

Visible Emissions Evaluation Record

Plant Name: Herculon Inc.

Address: West 7th St.

City: Hilburg Miss.

Emission Point: 009

Date: 5-25-84

Is emission point operation normal ? _____

V. E. Observer: Bobbie Donaghey

Certification Expiration: 10-19-84

Set No.	Time		Opacity	
	Start	End	Sum	Average
1	12 [illegible] pm	12 [illegible] pm	1820	75.8
2	12 [illegible] pm	12 [illegible] pm	1940	80.8
3	12 [illegible] pm	12 [illegible] pm	305	12.7

Overall Average: 56.4

	Initial	Final
Distance to discharge	2 Lengths	
Direction to discharge	N	
Height of observation point	Ground	
Height of discharge	200 ft.	
Plume color	Gray	
Plume background	Gray Sky	
Water vapor in plume ?		
Wind direction (from)	S	
Wind speed	5-10 mph	
Ambient temperature	91°	
Discharge temperature		
Sky conditions	PC	

Diagram Of Observation/Discharge Point

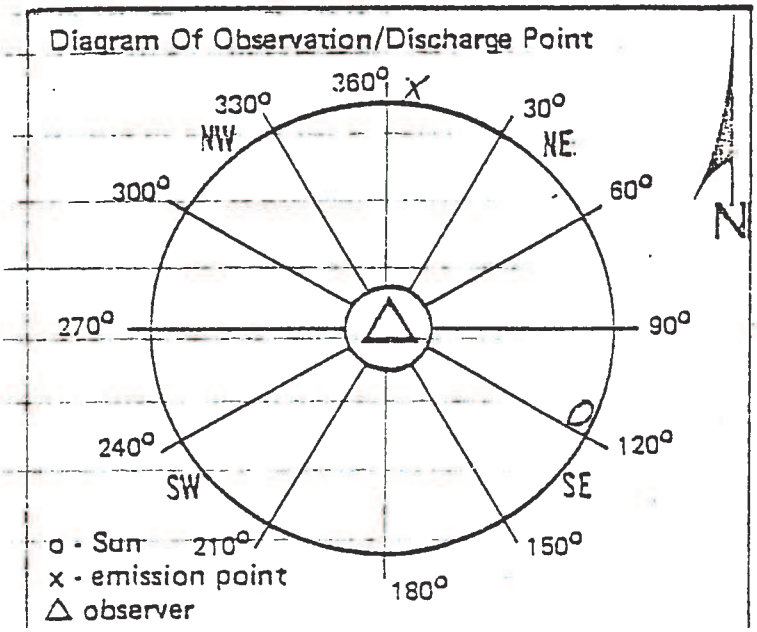

Min.	Seconds 0	15	30	45
0	30	30	30	30
1	30	30	40	40
2	70	90	100	100
3	100	100	100	100
4	100	100	100	100
5	100	100	100	100
6	100	100	100	100
7	100	100	100	100
8	100	100	100	100
9	100	100	100	100
10	80	60	50	40
11	35	30	25	20
12	15	15	15	10
13	10	10	10	10
14	10	10	10	5
15	10	5	5	10
16	5	15	15	20
17	20	20	20	30

Remarks: Cleaning #1 Boiler

Start 12:30

Stop 1:15

HERCULES

Visible Emissions Evaluation Record

Plant Name: Hercules Inc.

Address: West 7th St.

City: Hattiesburg Miss

Emission Point: 010

Date: 5-29-84

Is emission point operation normal ? _____

V. E. Observer: Bobbie Draughn

Certification Expiration: 10-19-84

Set No.	Time Start	Time End	Opacity Sum	Opacity Average
1	9°02 Am	9°08 Am	1235	51.5
2	9°08 Am	9°14 Am	525	21.9
3	9°14 Am	9°20 Am	605	25.2

Overall Average: 32.9

	Initial	Final
Distance to discharge	2 Lengths	
Direction to discharge	N	
Height of observation point	Ground	
Height of discharge	225 ft.	
Plume color	Gray	
Plume background	Blue Sky	
Water vapor in plume ?		
Wind direction (from)	NW	
Wind speed	10-15 mph	
Ambient temperature	67°	
Discharge temperature		
Sky conditions	PC	

Min.	Seconds 0	15	30	45
0	40	30	30	30
1	35	60	60	70
2	70	60	60	60
3	50	50	50	60
4	50	60	60	60
5	60	50	50	30
0	30	30	25	15
1	15	15	15	20
2	20	20	20	20
3	20	20	20	20
4	25	25	25	25
5	25	25	25	25
0	25	25	25	25
1	25	20	20	25
2	20	25	20	20
3	20	25	25	25
4	25	30	30	30
5	30	30	30	30

Diagram Of Observation/Discharge Point

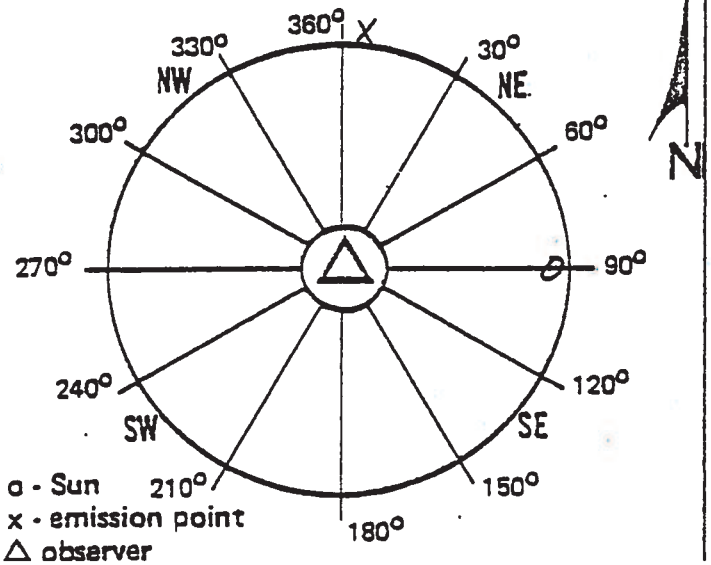

Remarks: Cleaning #3 Boiler

Start 8:20

Stop 9:45

Visible Emissions Evaluation Record

Plant Name: Hercules, Inc.

Address: West 7th St.

City: Hi'burg Miss.

Emission Point: 009

Date: 5-29-84

Is emission point operation normal ? _____

V. E. Observer: Bobbie Draughon

Certification Expiration: 10-19-84

Set No.	Time		Opacity	
	Start	End	Sum	Average
1	9^02 Am	9^08 Am	800	33.3
2	9^08 Am	9^14 Am	405	16.9
3	9^14 Am	9^20 Am	735	30.6

Overall Average: 26.9

	Initial	Final
Distance to discharge	2 Lengths	
Direction to discharge	N	
Height of observation point	Ground	
Height of discharge	200 ft.	
Plume color	Gray + Brown	
Plume background	Blue Sky	
Water vapor in plume ?		
Wind direction (from)	NW	
Wind speed	10-15 mph	
Ambient temperature	67°	
Discharge temperature		
Sky conditions	PC	

Diagram Of Observation/Discharge Point

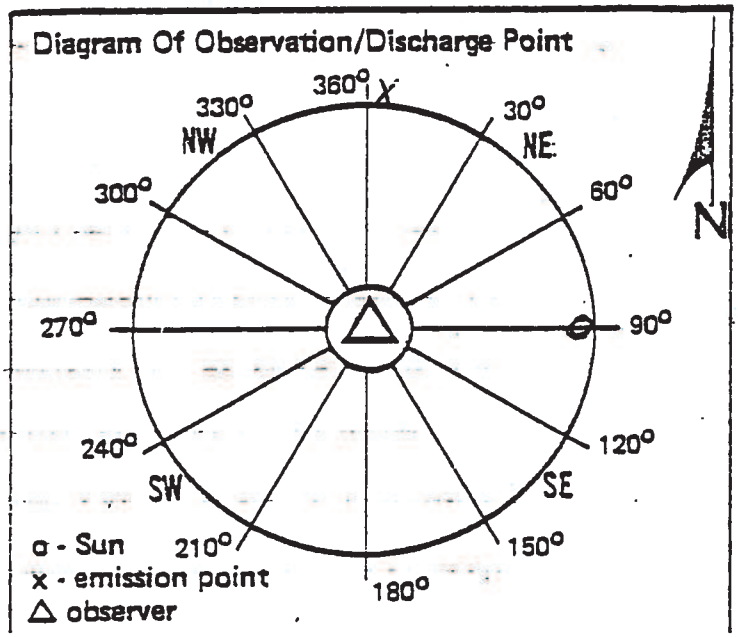

Min.	Seconds 0	15	30	45
0	40	20	15	15
1	25	25	40	40
2	40	40	50	60
3	50	50	40	50
4	30	20	20	20
5	30	30	30	20
0	40	30	25	15
1	10	10	15	15
2	40	25	15	15
3	10	10	10	10
4	10	10	10	10
5	10	10	20	30
0	25	30	40	50
1	60	60	50	50
2	40	40	30	30
3	25	30	20	15
4	10	20	15	20
5	20	15	20	20

Remarks: _____

HERCULES

Visible Emissions Evaluation Record

Plant Name: Hercules Inc.

Address: West 7th St.

City: Hattiesburg Miss.

Emission Point: 009

Date: 5-30-84

Is emission point operation normal ?

V. E. Observer: Bobbie Draughon

Certification Expiration: 10-19-84

Set No.	Time		Opacity	
	Start	End	Sum	Average
1	9^{21} Hrs	9^{27} Hrs	245	10.2
2	9^{27} Hrs	9^{33} Hrs	610	25.4
3	9^{33} Hrs	9^{39} Hrs	175	7.3

Overall Average: 14.3

	Initial	Final
Distance to discharge	2 Lengths	
Direction to discharge	N	
Height of observation point	Ground	
Height of discharge	200 ft.	
Plume color	Gray	
Plume background	Blue Sky	
Water vapor in plume ?		
Wind direction (from)	NE	
Wind speed	10 mph	
Ambient temperature	65°	
Discharge temperature		
Sky conditions	Clear	

Diagram Of Observation/Discharge Point

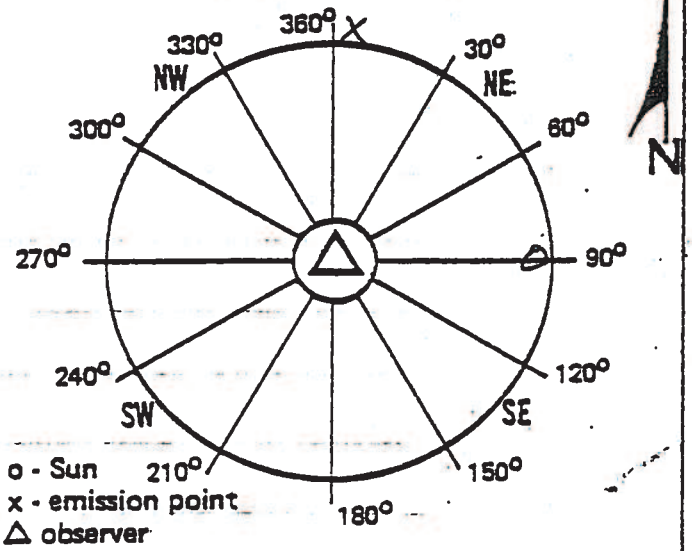

Min.	Seconds 0	15	30	45
0	10	10	15	10
1	10	10	10	10
2	10	10	10	10
3	10	10	10	10
4	10	10	10	10
5	10	10	10	10
0	10	10	10	10
1	10	10	35	35
2	30	30	40	50
3	50	60	60	50
4	15	15	15	15
5	15	15	10	10
0	5	5	10	5
1	5	5	5	5
2	5	5	10	10
3	5	10	10	10
4	5	5	5	10
5	10	10	10	10

Remarks:

Received By:

HERCULES

Visible Emissions Evaluation Record

Plant Name: Hercules Inc.

Address: West 7th St.

City: H'burg Miss

Emission Point: 010

Date: 5-30-84

Is emission point operation normal ? _____

V. E. Observer: Bobbie Draughn

Certification Expiration: 10-19-84

Set No.	Time Start	Time End	Opacity Sum	Opacity Average
1	9 21 Am	9 27	995	41.5
2	9 27 Am	9 33	1020	42.5
3	9 33 Am	9 39 Am	620	25.8

Overall Average: 36.6

	Initial	Final
Distance to discharge	2 Lengths	
Direction to discharge	N	
Height of observation point	Ground	
Height of discharge	225 ft.	
Plume color	Gray	
Plume background	Blue Sky	
Water vapor in plume ?		
Wind direction (from)	NE	
Wind speed	10 mph	
Ambient temperature	65°	
Discharge temperature		
Sky conditions	Clear	

Min.	Seconds 0	15	30	45
0	40	40	40	30
1	30	30	30	30
2	30	30	30	35
3	50	50	50	50
4	60	60	50	40
5	50	50	45	45
0	45	45	40	40
1	40	35	60	40
2	40	40	40	40
3	50	40	40	50
4	45	45	50	40
5	40	40	40	35
0	35	30	30	25
1	25	25	25	25
2	20	25	25	20
3	25	25	25	25
4	25	25	25	25
5	25	25	30	30

Diagram Of Observation/Discharge Point

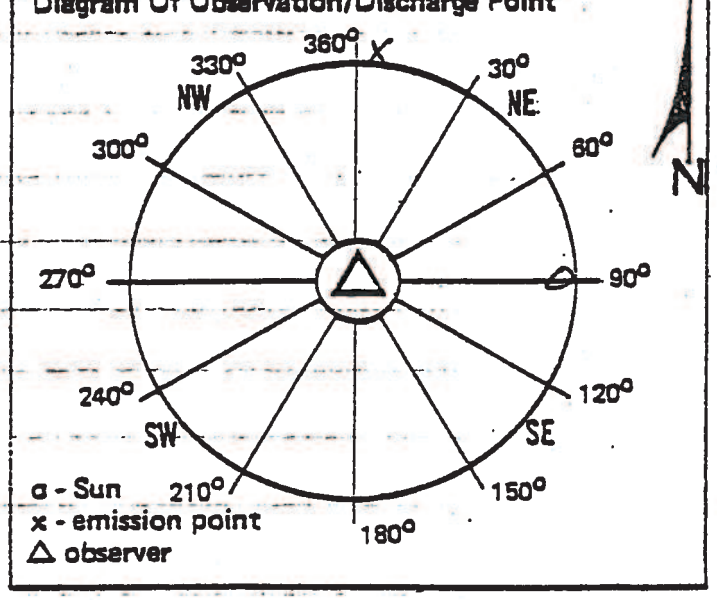

Remarks: Cleaning # 3 Boiler

Start 9:15

Stop 10:45

Received By: _____

HERCULES

Visible Emissions Evaluation Record

Plant Name: Hercules Inc.

Address: West 7th St.

City: H'burg Miss

Emission Point: 010

Date: 5-31-84

Is emission point operation normal ? _____

	Initial	Final
Distance to discharge	2 Lengths	
Direction to discharge	N	
Height of observation point	Ground	
Height of discharge	225 ft.	
Plume color	Gray	
Plume background	Blue Sky	
Water vapor in plume ?		
Wind direction (from)	East	
Wind speed	10 mph	
Ambient temperature	71°	
Discharge temperature		
Sky conditions	Clear	

Diagram Of Observation/Discharge Point

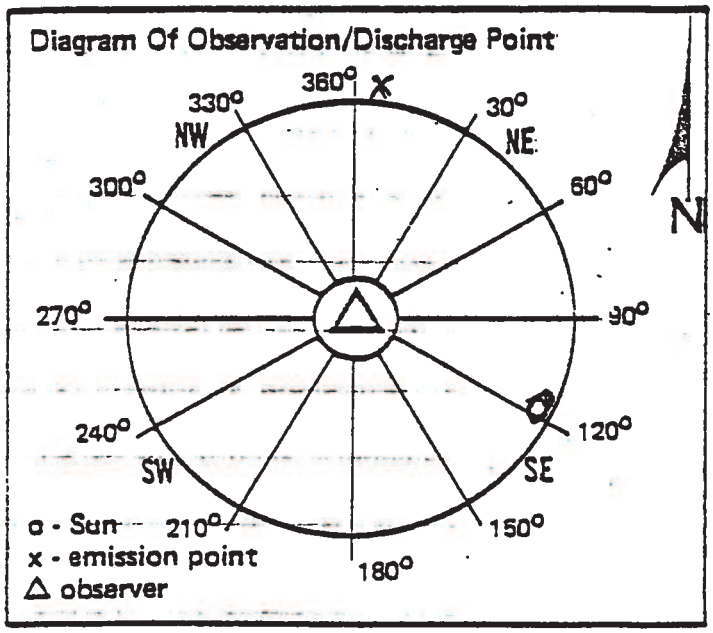

V. E. Observer: Bobbie Draughn

Certification Expiration: 10-19-84

Set No.	Time Start	Time End	Opacity Sum	Opacity Average
1	10 58 Am	11 04 Am	690	28.8
2	11 04 Am	11 10 Am	745	31.0
3	11 10 Am	11 16 Am	1070	44.6

Overall Average: 34.8

Min.	Seconds 0	15	30	45
0	30	30	30	30
1	30	30	30	30
2	30	30	30	30
3	30	30	30	30
4	30	30	25	25
5	25	25	25	25
0	25	25	25	25
1	25	25	20	20
2	30	30	35	30
3	30	30	30	30
4	30	30	30	40
5	40	40	50	50
0	50	45	45	45
1	45	45	40	40
2	40	40	40	40
3	40	40	40	40
4	40	40	40	50
5	50	55	60	60

Remarks: Cleaning # 4 Boiler
Start 11:00
Stop 12:05

Received By: _____

HERCULES

Hercules Incorporated
West 7th Street
P.O. Box 1937
Hattiesburg, MS 39401
(601) 545-3450

~~May 21, 1984~~
June 12, 1984

Copies to be made
7

ease find the

attached mont.. s of the boilers

for emission points 009 -

~~With regard to our recent disc.~~ ~~Don Watts we are~~

~~in the process of revising our~~ Our revised Power House En.. mental Log Sheet is now in use for Jun

We will continue to submit this report on a monthly basis.

Very truly yours,

Charles Jordan

Charles Jordan
Environmental Supervisor

CSJ:ml

Attachments

bcc: D. J. Keilman - Environmental Affairs, Wilm.
G. R. Yandle - Hatt
H. R. Buckley - "
D. T. Smith - "
W. R. Keen - "
L. C. Polk - "

HERCULES

Hercules Incorporated
West 7th Street
P.O. Box 1937
Hattiesburg, MS 39401
(601) 545-3450

May 21, 1984

RECEIVED
MAY 23 RECD
BUREAU OF POLLUTION CONTROL

Mr. Dwight K. Wylie, P.E. Chief
Air Division
Bureau of Pollution Control
P. O. Box 10385
Jackson, Mississippi 39209

Dear Mr. Wylie:

In reference to operating Permit No. 0800-0001, please find the attached monthly report detailing the compliance status of the boilers for emission points 009 and 010.

With regard to our recent discussions with Mr. Don Watts we are in the process of revising our Power House Environmental Log Sheet.

We will continue to submit this report on a monthly basis.

Very truly yours,

Charles Jordan
Environmental Supervisor

CSJ:ml

Attachments

HERCULES

Interoffice Memo

Hattiesburg, Mississippi
May 18, 1984

To: C. S. Jordan

From: L. C. Polk

Operating Permit No. 0800-00001 Hattiesburg, MS
Issued For The Operation Of Air Emissions Equipment

In reference to the above permit, Part III, Other Requirements, 1-C, the following monthly report is for April 1984.

The report details the compliance status of the boilers with copies of all visible emissions evaluations in which any reading exceeds 40% opacity.

Number of VEE copies attached = 18.

In addition, copies of log sheets and opacity meter sheets are attached for all visible emission evaluations when opacity exceeds 40% for two minutes or more.

L. C. Polk

LCP:ps
0239N

Attachment

HER. 715
PRINTED IN U.S.A.

-48
ev. 5/17/82

BOILER ROOM LOG SHEET

Date 4-27-84

ITEM		SHIFT
Cleaned fires No. 1 Boiler	Started	12:15
	Stopped	1:45
Cleaned fires No. 2 Boiler	Started	
	Stopped	
Cleaned fires No. 3 Boiler	Started	7:30
	Stopped	8:45
Cleaned fires No. 4 Boiler	Started	9:30
	Stopped	11:00
Checked Fly Ash Hoppers	No. 1 Boiler	✓
	No. 2 Boiler	
	No. 3 Boiler	✓
	No. 4 Boiler	✓
Residue Received - Gal.		

Residue Burned - Boilers 56 % at 2 P.M.	No. 1	No. 2	No. 3	No. 4
#6 Oil Burned - Boilers				

Residue Remaining In S-89 _____ (M Gal.).

Comments:

882,600

METER READINGS

Unit	Start	End	Diff.
#1	80142	83288	3146
#2	x		
#3	[illegible]	68883	3100
#4	37445	40025	2580
#5			
Tet. Gas	185784	185784	0
#5 Gas	x		
#5 Oil	x		
	[illegible]	36583	0
	[illegible]	94984	1
Total			

PERSONNEL

Fireman Fortan
#1 Ash Roller Nobles
#2 Ash Roller Gray, McCillan
Fuel House Curry
#2 Helper Jackson

7-3 Start 6 AM - End 2 PM)
3-11 Start 2 PM - End 10 PM) Read meters at these times
11-7 Start 10 PM - End 6 AM)

#1 34783
#2
#3 38567
#4 32185
#5

S-48
Rev. 5/17/82

BOILER ROOM LOG SHEET

Date 4-26-84

ITEM		7-3 SHIFT
Cleaned fires No. 1 Boiler	Started	10:40
	Stopped	11:35
Cleaned fires No. 2 Boiler	Started	X
	Stopped	X
Cleaned fires No. 3 Boiler	Started	7:10
	Stopped	8:00
Cleaned fires No. 4 Boiler	Started	8:15
	Stopped	9:05
Checked Fly Ash Hoppers	No. 1 Boiler	
	No. 2 Boiler	
	No. 3 Boiler	
	No. 4 Boiler	
Residue Received - Gal.		

Residue Burned - Boilers	No. 1	No. 2	No. 3	No. 4
#6 Oil Burned - Boilers				

Residue Remaining In S-89 _____ (M Gal.). 65% at 6 AM

63% at 2 PM

Comments:

839500

METER READINGS

Unit	Start	End	Diff.
#1	71731	74566	2835
#2			—
#3	56393	59530	3137
#4	29607	32030	2423
#5			—
Tet. Gas	185784	185784	0
#5 Gas	X	X	X
#5 Oil	X	X	X
N	36558	36582	24
3	94983	94983	0
Total			

PERSONNEL

Fireman Johnson
#1 Ash Roller Nobles
#2 Ash Roller Gray. McMullen
Fuel House Berry
#2 Helper Horne

INST. MAN WORKED ON # 3 SMOKE DECT. 24 M.W.

7-3 Start 6 AM - End 2 PM)
3-11 Start 2 PM - End 10 PM) Read meters at these times
11-7 Start 10 PM - End 6 AM)

1 35046
2
3 39125
4 32658
5 —

-48
ev. 5/17/82

BOILER ROOM LOG SHEET

Date 4-25-84

ITEM					7-3 SHIFT
Cleaned fires No. 1 Boiler		Started			12.00
		Stopped			1.30
Cleaned fires No. 2 Boiler	OUT	Started			X
		Stopped			X
Cleaned fires No. 3 Boiler	START	Started			7.30
		Stopped			8.45
Cleaned fires No. 4 Boiler		Started			9.15
		Stopped			10.30
Checked Fly Ash Hoppers		No. 1 Boiler			✓
		No. 2 Boiler			
		No. 3 Boiler			✓
		No. 4 Boiler			✓
Residue Received - Gal.	3,000 gal.				
Residue Burned - Boilers	69% at 2 P.M.	No. 1 ✓	~~No. 2~~ X	No. 3 ✓	No. 4 ✓
#6 Oil Burned - Boilers					

Residue Remaining In S-89 _____ (M Gal.). 40% at 6:AM.

Comments: Received 3,000 gal of Residue from Watergate 71% When finished,

839,100

METER READINGS

Unit	Start	End	Diff.
#1	63882	66465	2583
#2	X	X	
#3	46827	49817	2990
#4	21513	24331	2818
#5	X	X	
Tet. Gas	185784	185784	0
#5 Gas	X	X	
#5 Oil	X	X	
N.	36556	36556	0
S.	94979	94979	0
Total			

PERSONNEL

Fireman Foster
#1 Ash Roller Hawn
#2 Ash Roller Grey, McCullen
Fuel House Berry
#2 Helper Jackson

7-3 Start 6 AM - End 2 PM)
-11 Start 2 PM - End 10 PM) Read meters at these times
1-7 Start 10 PM - End 6 AM)

1 32704
✓ —
3 39856
4 33725

5/17/82

BOILER ROOM LOG SHEET

Date 4-24-82

ITEM		7-3 SHIFT
aned fires No. 1 Boiler	Started	11.45
	Stopped	1.25
aned fires No. 2 Boiler OUT	Started	
	Stopped	
aned fires No. 3 Boiler START	Started	7.30
	Stopped	8.45
aned fires No. 4 Boiler	Started	9.00
	Stopped	10.30
cked Fly Ash Hoppers	No. 1 Boiler	✓
	No. 2 Boiler	X
	No. 3 Boiler	✓
	No. 4 Boiler	✓
due Received - Gal.		
due Burned - Boilers S/B at 2P.M.	No. 1 ✓ / No. 2 / No. 3 ✓ / No. 4 ✓	
il Burned - Boilers		

idue Remaining In S-89 _____ (M Gal.). 54% at 6 A.M.

ents:

818600

METER READINGS

it	Start	End	Diff.
	55824	58624	2800
	38922	41623	2701
	13269	15954	2685
Gas	185784	185784	0
is			
V.	36554	36556	2
2.	9497	9497	8

PERSONNEL

Fireman Foster
#1 Ash Roller Nobles
#2 Ash Roller Capt. McCallum
Fuel House Horn
#2 Helper Jackson

Start 6 AM - End 2 PM)
Start 2 PM - End 10 PM)
Start 10 PM - End 6 AM)

Read meters at these times.

#1 33575
#3 32938
#4 34350

Total steam 100863

Total Gas 0

5/17/82 BOILER ROOM LOG SHEET Date 4-13-84

ITEM					7-3 SHIFT
aned fires No. 1 Boiler		Started			8.26
		Stopped			9.45
aned fires No. 2 Boiler		Started			11.10
		Stopped			12.00
aned fires No. 3 Boiler	START	Started			7.30
		Stopped			8.25
aned fires No. 4 Boiler	OUT	Started			X
		Stopped			X
cked Fly Ash Hoppers		No. 1 Boiler			✓
		No. 2 Boiler			✓
		No. 3 Boiler			✓
		No. 4 Boiler			X
idue Received - Gal.					
idue Burned - Boilers		No. 1 ✓	No. 2 ✓	No. 3 ✓	No. 4 X
Oil Burned - Boilers					

sidue Remaining In S-89 _____ (M Gal.). 47 % at 6:[illegible]

45% at 2:[illegible]

ments:

METER READINGS

nit	Start	End	Diff.
	66425	70144	3719
	02834	04007	1173
	38976	43217	4241
	X	X	X
	X	X	
. Gas	171495	171815	320
Gas	X		
Oil	X		
N	36527	36527	0
S	94853	94869	16
al			

PERSONNEL

Fireman Jackson
#1 Ash Roller Mosely
#2 Ash Roller Graham
Fuel House Russell
#2 Helper Watts

913,300 McDonald

-I Start 6 AM - End 2 PM)
-T Start 2 PM - End 10 PM) Read meters at these times
-T Start 10 PM - End 6 AM)

46246
18321
49042

S-48
Rev. 5/17/82

BOILER ROOM LOG SHEET

Date 4-10-84

ITEM			SHIFT
Cleaned fires No. 1 Boiler		Started	12.21
		Stopped	12.45
Cleaned fires No. 2 Boiler	START	Started	7.20
		Stopped	10.15
Cleaned fires No. 3 Boiler	OUT	Started	
		Stopped	
Cleaned fires No. 4 Boiler		Started	11.30
		Stopped	12.20
Checked Fly Ash Hoppers		No. 1 Boiler	
		No. 2 Boiler	
		No. 3 Boiler	
		No. 4 Boiler	
Residue Received - Gal.			

	No. 1	No. 2	No. 3	No. 4
Residue Burned - Boilers				
#6 Oil Burned - Boilers	—	—		—

Residue Remaining In S-89 _____ (M Gal.). 60% at 6:00 PM

52% at 2:PM

Comments:

METER READINGS

Unit	Start	End	Diff.
#1	34034	38118	4084
#2	86868	88303	1435
#3	X	X	
#4	01477	04960	3483
#5	99682	X	
Tot. Gas	157947	158096	149
#6 Gas	52151	X	
#6 Oil	X	X	
N	36521	36521	
S	94195	94491	
Total			

PERSONNEL

Fireman Jackson
#1 Ash Roller Mosely
#2 Ash Roller Graham
Fuel House Horne
#2 Helper Watts

900200

7-3 Start 6 AM - End 2 PM)
3-11 Start 2 PM - End 10 PM)
11-7 Start 10 PM - End 6 AM)

Read meters at these times

#1 49954
#2 22217
#4 43392

TOTAL Steam 115563

Total Gas 15

S-48
Rev. 9/17/32.

BOILER ROOM LOG SHEET

Date 4-5-84

ITEM		7-3 SHIFT
Cleaned fires No. 1 Boiler	Started	8:10
	Stopped	8:12
Cleaned fires No. 2 Boiler	Started	10:85
	Stopped	12:00
Cleaned fires No. 3 Boiler OUT	Started	~~1~~
	Stopped	
Cleaned fires No. 4 Boiler START	Started	7:00
	Stopped	8:00
Checked Fly Ash Hoppers	No. 1 Boiler	
	No. 2 Boiler	
	No. 3 Boiler	
	No. 4 Boiler	
Residue Received - Gal.		

	No. 1	No. 2	No. 3	No. 4
Residue Burned - Boilers				
#6 Oil Burned - Boilers				

Residue Remaining In S-89 _____ (M Gal.).

55% at 2PM

Comments:

989200

METER READINGS

Unit	Start	End	Diff.
#1	80964	84795	3831
#2	58386	60407	2021
#3	X		
#4	61765	65805	4040
#5	X		
Ter. Gas	126056	126279	223
#3 Gas	X		
#5 Oil	X		
N	36518	36518	0
S	94022	94026	4
Total			

PERSONNEL

Fireman JOHNSON
#1 Ash Roller PRICE
#2 Ash Roller WAHMAN
Fuel House RICHARDSON
#2 Helper HORNE
JACKSON

7-3 Start 6 AM - End 2 PM)
3-11 Start 2 PM - End 10 PM)
11-7 Start 10 PM - End 6 AM)

#1 46033
#2 27833
#4 48009

Read meters at these times

TOTAL STEAM 121874

Total Gas 184

S-48
Rev. 5/17/82

BOILER ROOM LOG SHEET

Date 2-3-84

ITEM		7-3 SHIFT
Cleaned fires No. 1 Boiler	Started	9:15
	Stopped	10:45
Cleaned fires No. 2 Boiler	Started	11:00
	Stopped	1:00
Cleaned fires No. 3 Boiler	Started	
OUT	Stopped	
Cleaned fires No. 4 Boiler	Started	7:15
START	Stopped	8:45
Checked Fly Ash Hoppers	No. 1 Boiler	✓
	No. 2 Boiler	✓
	No. 3 Boiler	
	No. 4 Boiler	✓
Residue Received - Gal.		

Residue Burned - Boilers	No. 1	No. 2	No. 3	No. 4
#6 Oil Burned - Boilers	✓		OUT	✓

Residue Remaining In S-89 _____ (M Gal.). 56% at 6 Ft

Comments:

METER READINGS

Unit	Start	End	Diff.
#1	69525	73428	3903
#2	51804	54060	2256
#3	X	X	
#4	50461	54379	3918
#5	X	X	
Ter. Gas	124502	124820	318
#3 Gas	X	X	
#5 Oil	X	X	
	36515	36515	0
	93883	93927	55
Total			1007700

PERSONNEL

Fireman Bunch
#1 Ash Roller Hume
#2 Ash Roller Walmon
Fuel House Richardson
#2 Jackson
Helper Water

1-3 Start 6 AM - End 2 PM)
3-11 Start 2 PM - End 10 PM)
11-7 Start 10 PM - End 6 AM)

#1 47663
#2 27+25
#4 47100

Read meters at these times

TOTAL STEAM 122188

TOTAL GAS 155

5455

-46
Rev. 5/17/82

BOILER ROOM LOG SHEET

Date 4-3-84

ITEM		SHIFT
Cleaned fires No. 1 Boiler	Started	9:15
	Stopped	11:00
Cleaned fires No. 2 Boiler	Started	11:45
	Stopped	1:15
Cleaned fires No. 3 Boiler	Started	
	Stopped	
Cleaned fires No. 4 Boiler	Started	7:00
	Stopped	8:45
Checked Fly Ash Hoppers	No. 1 Boiler	✓
	No. 2 Boiler	✓
	No. 3 Boiler	
	No. 4 Boiler	✓

OUT

SPLIT

	No. 1	No. 2	No. 3	No. 4
Residue Received – Gal.				
Residue Burned – Boilers	✓	✓		✓
#4 Oil Burned – Boilers				

Residue Remaining In S-89 _____ (M Gal.) - 57 % at 60° Air

Comments:

METER READINGS

Units	Start	End	Diff.
#1	58373	61810	3437
#2	45661	48130	2469
#3	✓		
#4	39556	43071	3515
#5	✓		
Ter. Gas	120364	120748	384
#3 Gas	✓		
#5 Oil	✓		
	36512	36514	2
	93774	93777	3
Total			942100

PERSONNEL

Fireman Burch
#1 Ash Roller Price
#2 Ash Roller INGRAM
Fuel House Horne
#2 JACKSON
Helper WATTS

1-3 Start 6 AM – End 2 PM)
3-11 Start 2 PM – End 10 PM)
11-7 Start 10 PM – End 6 AM)

#1 46967
#2 25596
#4 45438

Read meters at these times

Total Steam 117501

Total Gas 414

-48
ev. 5/17/82

BOILER ROOM LOG SHEET

Date 4-2-84

ITEM			7-3 SHIFT
Cleaned fires No. 1 Boiler		Started	9:00
		Stopped	10:15
Cleaned fires No. 2 Boiler		Started	11:30
		Stopped	12:45
Cleaned fires No. 3 Boiler	Out	Started	
		Stopped	
Cleaned fires No. 4 Boiler	Start	Started	7:15
		Stopped	8:30
Checked Fly Ash Hoppers		No. 1 Boiler	
		No. 2 Boiler	
		No. 3 Boiler	
		No. 4 Boiler	
Residue Received - Gal.			

	No. 1	No. 2	No. 3	No. 4
Residue Burned - Boilers				
#6 Oil Burned - Boilers	✓	✓		✓

Residue Remaining In S-89 _____ (M Gal.). 19% at 6 AM

Comments:

METER READINGS

Unit	Start	End	Diff.
#1	48062	51193	3131
#2	37213	40124	2911
#3	X		
#4	28429	32123	3694
#5	X		
Tot. Gas	116249	116249	0
#6 Gas	X		
#6 Oil	X		
N	36508	36508	0
S	93764	93773	9
Total			

973600

PERSONNEL

Fireman BUNCH
#1 Ash Roller Price
#2 Ash Roller Horne
Fuel House Richardson
#2 Helper JACKSON WATTS

7-3 Start 6 AM - End 2 PM)
3-11 Start 2 PM - End 10 PM) Read meters at these times
11-7 Start 10 PM - End 6 AM)

#1 42963
#2 35200

#4 [illegible]

OPACITY EVALUATION - WOOD BURNING BOILERS

Date _____

Boiler No. 1			Boiler No. 2			Boiler No. 3			Boiler No. 4		
Time	Duration	Note	Time	Duration	Note	Time	Duration	Note	Time	Duration	Note
8:35	30"	3									
8:42	2sec	3									

NOTES:

1. Load change.
2. Fuel oil adjustme
3. Cleaning furnace.
4. Meter defect.
5. Cleaning meter lenses.

OPACITY EVALUATION - WOOD BURNING BOILERS

Date _____

Boiler No. 1			Boiler No. 2			Boiler No. 3			Boiler No. 4		
Time	Duration	Note	Time	Duration	Note	Time	Duration	Note	Time	Duration	Note
7:10	20sec	1	1:33	2 sec	1						
720	3 sec	1	1:40	2 sec	1						
9:50	20sec	3									
11:47	3 sec	1									
11:58	2 sec	1									
12:10	20sec	1									

NOTES:

1. Load change.
2. Fuel oil adjustme
3. Cleaning furnace.
4. Meter defect.
5. Cleaning mete. lenses.

OPACITY EVALUATION - WOOD BURNING BOILERS

Date 4-4-84

7-3

Boiler No. 1			Boiler No. 2			Boiler No. 3			Boiler No. 4		
Time	Duration	Note	Time	Duration	Note	Time	Duration	Note	Time	Duration	Note
8:45	20 sec	1							1:36		1
9:05		1									
11:[illegible]		1									
12:07	2 sec	1									

NOTES:

1. Load change.
2. Fuel oil adjustment.
3. Cleaning fur[illegible]e.
4. Meter defect.
5. Cleaning meter lenses.

OPACITY EVALUATION - WOOD BURNING BOILERS

Date 4-5-84

7-3

Boiler No. 1			Boiler No. 2			Boiler No. 3			Boiler No. 4		
Time	Duration	Note	Time	Duration	Note	Time	Duration	Note	Time	Duration	Note
1115	2 Sec	1									
1200	3 Sec	1									
1205	3 Sec	1									
1210	3 Sec	2									

NOTES:

1. Load change.
2. Fuel oil adjustment.
3. Cleaning furnace
4. Meter defect.
5. Cleaning meter lenses.

OPACITY EVALUATION - WOOD BURNING BOILERS

Date 4-10-84

7-3

Boiler No. 1			Boiler No. 2			Boiler No. 3			Boiler No. 4		
Time	Duration	Note	Time	Duration	Note	Time	Duration	Note	Time	Duration	Note
7:33	10 c	1							2:05	5 c	1
10:10	10 c	1									
10:17	5	1									

NOTES:

1. Load change.
2. Fuel oil adjustment.
3. Cleaning furnace.
4. Meter defect.
5. Cleaning meter lenses.

OPACITY EVALUATION - WOOD BURNING BOILERS

Date 4-13-84

7-3

Boiler No.			Boiler No. 2			Boiler No. 3			Boiler No. 4		
Time	Duration	Note	Time	Duration	Note	Time	Duration	Note	Time	Duration	Note
7:00	5 c	1									
9:50	5 c	1									
11:30	10 c	2									
12:20	10 c	2									
1:10	10 c	2									

NOTES:

1. Load change.
2. Fuel oil adjustment.
3. Cleaning furnace
4. Meter defect.
5. Cleaning meter lenses.

OPACITY EVALUATION - WOOD BURNING BOILERS

Date 4-24-84
1-3 SHIFT

Boiler No. 1			Boiler No. 2			Boiler No. 3			Boiler No. 4		
Time	Duration	Note	Time	Duration	Note	Time	Duration	Note	Time	Duration	Note
6:50	2 Min	4									
7:10	2 Min	4									
8:50	30 Sec	2									
8:57	30 Sec	2									
8:58	10 Sec	2									

NOTES:

1. Load change.
2. Fuel oil adjustment.
3. Cleaning furnace.
4. Meter defect.
5. Cleaning meter lenses.

OPACITY EVALUATION - WOOD BURNING BOILERS

Date 4-27-84

7-3

Boiler No.			Boiler No. 2			Boiler No. 3			Boiler No. 4		
Time	Duration	Note	Time	Duration	Note	Time	Duration	Note	Time	Duration	Note
7:55	10sec	2				8:8	10 Min	3	7:10	10 Sec	2
8:55	10 sec	2							8:30	6 Sec	2

NOTES:

1. Load change.
2. Fuel oil adjustment.
3. Cleaning furnace.
4. Meter defect.
5. Cleaning meter lenses.

OPACITY EVALUATION - WOOD BURNING BOILERS

Date 4-26-84

7-3

Boiler No.			Boiler No. 2			Boiler No. 3			Boiler No. 4		
Time	Duration	Note	Time	Duration	Note	Time	Duration	Note	Time	Duration	Note
1220	3Sec	2				810	5 MIN.	6	130	3 Sec	2
						930	19 MIN.	6			

NOTES:

1. Load change.
2. Fuel oil adjustment.
3. Cleaning furnace.
4. Meter defect.
5. Cleaning meter lenses.
6. inst. MAN WAS WORKING on Meter NO SMOKE

OPACITY EVALUATION - WOOD BURNING BOILERS

Date 4-25-84
7-3 SHIFT

Boiler No. 1			Boiler No. 2			Boiler No. 3			Boiler No. 4		
Time	Duration	Note	Time	Duration	Note	Time	Duration	Note	Time	Duration	Note

HERCULES

Visible Emissions Evaluation Record

Plant Name: Hercules Inc

Address: West 7th St.

City: Hattiesburg Miss

Emission Point: 209

Date: 4-30-84

Is emission point operation normal ?

V. E. Observer: Bobbie Draughn

Certification Expiration:

Set No.	Time Start	Time End	Opacity Sum	Opacity Average
1	10 00 Am	10 06 Am	710	29.6
2	10 06 Am	10 12 Am	250	10.4
3	10 12 Am	10 18 Am	160	6.7

Overall Average: 15.6

	Initial	Final
Distance to discharge	2 Lengths	
Direction to discharge	N	
Height of observation point	Ground	
Height of discharge	200 ft	
Plume color	Gray	
Plume background	Gray	Sky
Water vapor in plume ?		
Wind direction (from)	W	
Wind speed	5 mph	
Ambient temperature	79°	
Discharge temperature		
Sky conditions	Cloudy	

Min.	Seconds 0	15	30	45
0	25	25	30	30
1	40	40	50	60
2	40	40	40	30
3	30	30	25	25
4	15	15	15	25
5	20	20	20	20
0	20	20	20	20
1	20	15	15	15
2	10	10	5	5
3	5	5	5	5
4	5	10	10	10
5	5	5	5	5
0	10	5	5	10
1	10	10	5	5
2	5	5	10	10
3	10	5	5	5
4	5	5	5	5
5	5	5	10	5

Remarks:

Diagram Of Observation/Discharge Point

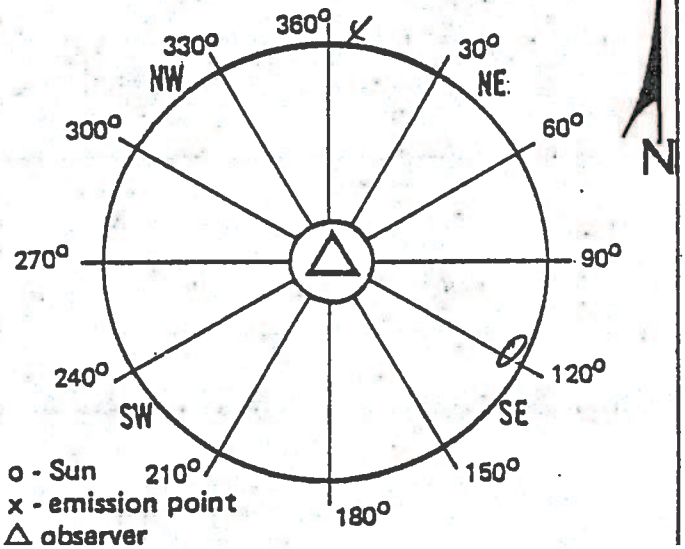

HERCULES

Visible Emissions Evaluation Record

Plant Name: Hercules Inc

Address: West 7th St

City: H'burg Miss

Emission Point: 010

Date: 4-27-84

Is emission point operation normal ? _____

V. E. Observer: Bobbie Draughn

Certification Expiration: 4-27-84

Set No.	Time Start	Time End	Opacity Sum	Opacity Average
1	8:05 Am	8:11 Am	2250	93.8
2	8:11 Am	8:17 Am	810	33.8
3	8:17 Am	8:23 Am	735	30.6

Overall Average: 52.7

	Initial	Final
Distance to discharge	2 Lengths	
Direction to discharge	N	
Height of observation point	Ground	
Height of discharge	225 ft	
Plume color	Gray	
Plume background	Gray Sky	
Water vapor in plume ?		
Wind direction (from)	S	
Wind speed	5-10 mph	
Ambient temperature	78°	
Discharge temperature		
Sky conditions	Cloudy	

Min.	Seconds 0	15	30	45
0	70	90	100	100
1	100	70	100	100
2	100	100	100	100
3	100	100	100	100
4	100	100	90	90
5	90	90	70	70
0	60	40	25	30
1	10	10	15	30
2	30	30	40	40
3	30	40	40	10
4	20	30	20	60
5	50	30	60	60
0	50	80	80	40
1	30	40	30	30
2	20	15	10	5
3	5	5	5	10
4	15	25	25	25
5	20	50	60	60

Diagram Of Observation/Discharge Point

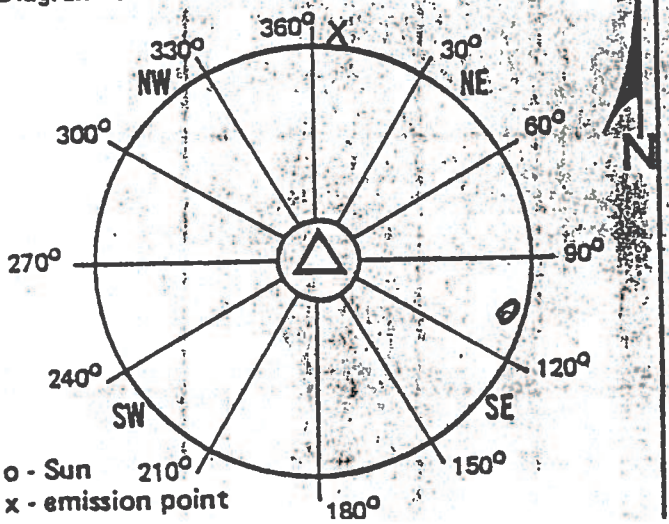

Remarks:

Cleaning Boiler #3 START 7:30

STOP 8:45

Visible Emissions Evaluation Record

t Name: Hercules Inc.
ress: West 7th St.
: Hlburg Miss.
sion Point: 009
: 4-2-84
ission point operation normal ? _____

V. E. Observer: Bobbie Draughn
Certification Expiration: 4-27-84

Set No.	Time		Opacity	
	Start	End	Sum	Average
1	8 35 Am	8 41 Am	1520	63.3
2	8 41 Am	8 47 Am	1135	47.3
3	8 47 Am	8 53 Am	635	26.5

Overall Average: 45.7

	Initial	Final
ince to discharge	2 Lengths	
ction to discharge	NNE	
ht of observation point	Ground	
ht of discharge	200 ft.	
e color	Gray	
e background	Gray Sky	
r vapor in plume ?		
direction (from)	East	
speed	5-10 mph	
ient temperature	59°	
arge temperature		
conditions	Cloudy	

Min.	Seconds 0	15	30	45
0	40	40	60	60
1	70	70	70	40
2	40	60	60	60
3	50	50	50	60
4	60	90	90	80
5	80	80	80	80
0	75	75	75	75
1	60	60	60	60
2	60	50	60	60
3	60	50	30	30
4	25	25	25	25
5	25	25	20	25
0	25	25	25	25
1	25	25	25	25
2	30	30	30	30
3	25	20	40	30
4	20	20	25	25
5	30	30	25	25

gram Of Observation/Discharge Point

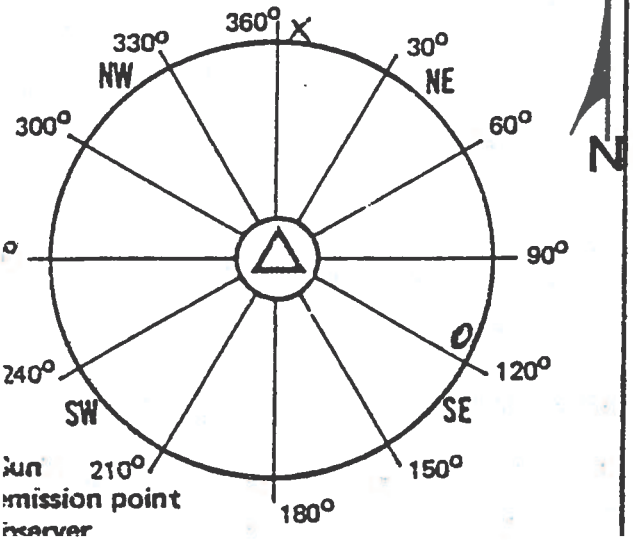

un
mission point
bserver

Remarks: _____

Visible Emissions Evaluation Record

t Name: Hercules Inc

ress: West 7th St

: Hattiesburg Miss

ission Point: 010

: 4-2-84

nission point operation normal ? _____

V. E. Observer: Bobbie Draughn

Certification Expiration: 4-27-84

Set No.	Time		Opacity	
	Start	End	Sum	Average
1	8 35 Am	8 41 Am	700	29.2
2	8 41 Am	8 47 Am	535	22.3
3	8 47 Am	8 53 Am	865	36.0

Overall Average: 29.2

	Initial	Final
ance to discharge	2 Lengths	
ction to discharge	NNE	
ht of observation point	Ground	
ht of discharge	225 ft	
ne color	Gray	
ne background	Gray Sky	
er vapor in plume ?		
d direction (from)	East	
d speed	5-10 mph	
bient temperature	59°	
charge temperature		
conditions	Cloudy	

Min.	Seconds 0	15	30	45
0	25	35	40	40
1	25	30	30	50
2	50	40	30	25
3	30	30	40	30
4	30	20	20	15
5	15	15	15	20
0	20	20	20	20
1	20	20	30	30
2	25	25	25	25
3	20	20	20	20
4	20	15	15	15
5	25	25	30	30
0	30	40	50	40
1	35	40	40	50
2	40	35	40	30
3	30	30	30	30
4	30	30	30	30
5	35	40	40	40

agram Of Observation/Discharge Point

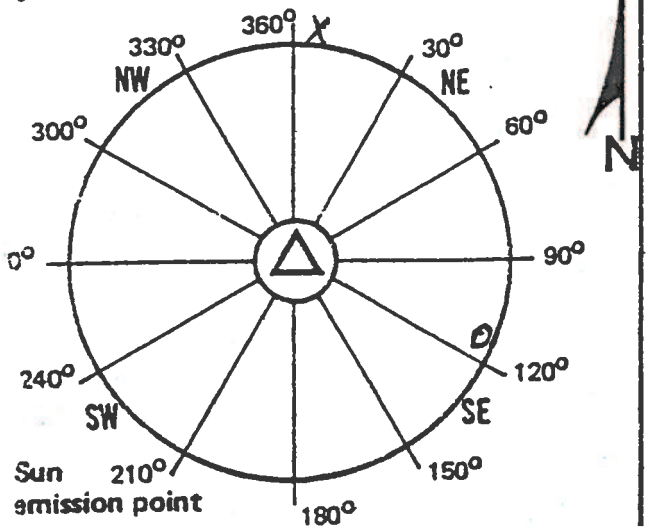

Remarks: _____

Visible Emissions Evaluation Record

t Name: Hercules Inc

ress: West 7th St

: Hlbrg Miss

ission Point: 009

: 4-3-84

nission point operation normal ? _____

	Initial	Final
ance to discharge	2 Lengths	
ction to discharge	NNE	
ht of observation point	Ground	
ht of discharge	200 ft	
ne color	Gray	
ne background	Blue Sky	
er vapor in plume ?		
d direction (from)	S	
d speed	5-10 mph	
bient temperature	82°	
harge temperature		
conditions	PC	

V. E. Observer: Bobbie Draughn

Certification Expiration: 4-27-84

Set No.	Time		Opacity	
	Start	End	Sum	Average
1	1:15 pm	1:21 pm	1390	57.9
2	1:21 pm	1:27 pm	1850	77.1
3	1:27 pm	1:33 pm	165	6.9

Overall Average: 47.3

	Seconds			
Min.	0	15	30	45
0	10	10	10	30
1	50	50	50	60
2	70	60	60	60
3	60	60	60	80
4	80	70	70	70
5	80	80	80	80
0	80	80	80	80
1	70	80	80	80
2	80	90	90	90
3	90	90	60	70
4	80	80	80	80
5	80	80	70	10
0	10	5	5	5
1	5	10	10	10
2	5	10	10	5
3	10	5	5	10
4	10	5	5	5
5	5	5	5	5

agram Of Observation/Discharge Point

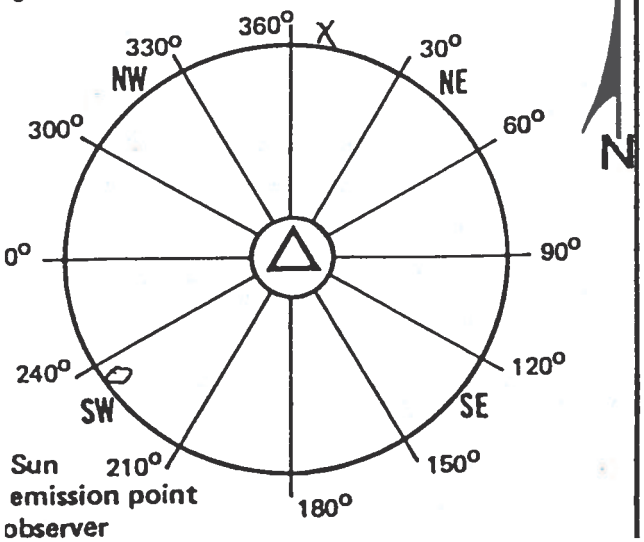

Remarks: _____

Visible Emissions Evaluation Record

Name: Hercules Inc

ess: West 7th St

H'burg Miss

ion Point: 009

4-4-84

ission point operation normal ? _____

V. E. Observer: Bobbie Draughn

Certification Expiration: 4-27-84

Set No.	Time		Opacity	
	Start	End	Sum	Average
1	12 °° N	12 °6 PM	930	38.8
2	12 °6 PM	12 12 PM	1060	44.2
3	12 12 PM	12 18 PM	965	40.2

Overall Average: 41.1

	Initial	Final
nce to discharge	2 Lengths	
tion to discharge	NNE	
it of observation point	Ground	
it of discharge	200 ft	
e color	Gray	
e background	Blue Sky	
r vapor in plume ?		
direction (from)	NW	
speed	10-20 mph	
ient temperature	68°	
iarge temperature		
conditions	Clear	

	Seconds			
Min.	0	15	30	45
0	30	30	30	40
1	40	40	40	40
2	40	40	40	40
3	40	40	40	40
4	40	40	40	40
5	40	40	40	40
0	40	40	60	50
1	50	50	50	50
2	50	50	50	50
3	40	40	40	40
4	40	40	40	40
5	35	40	35	40
0	40	40	40	40
1	40	50	40	30
2	30	40	40	40
3	35	40	40	50
4	40	40	40	40
5	40	40	40	50

gram Of Observation/Discharge Point

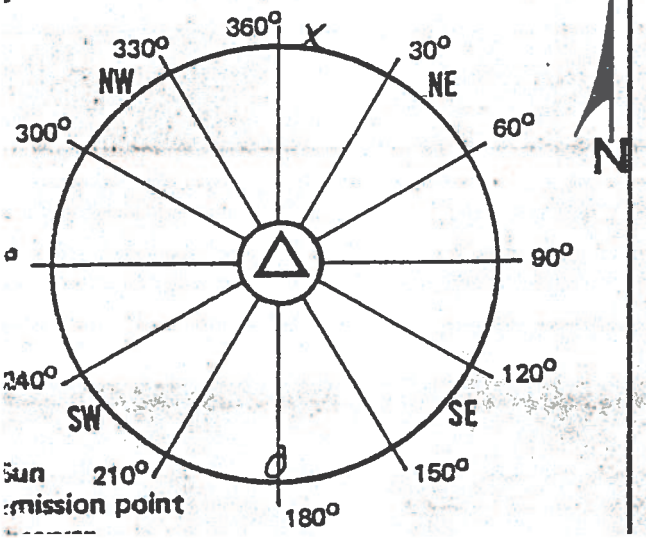

Remarks: _____

Visible Emissions Evaluation Record

t Name: Hercules Inc

ress: West 7th St

: H'burg Miss

ssion Point: 010

: 4-5-84

nission point operation normal ? _____

V. E. Observer: Bobbie Draughn

Certification Expiration: 4-27-84

Set No.	Time		Opacity	
	Start	End	Sum	Average
1	11 26 Am	11 32 Am	1450	60.4
2	11 32 Am	11 38 Am	1540	64.2
3	11 38 Am	11 44 Am	1580	65.3

Overall Average: 63.5

	Initial	Final
ance to discharge	2 Lengths	
ction to discharge	NNE	
ht of observation point	Ground	
ht of discharge	225 ft	
ne color	Gray	
ne background	Blue Sky	
er vapor in plume ?		
d direction (from)	NW	
d speed	10-15 mph	
ient temperature	60°	
harge temperature		
conditions	PC	

Min.	Seconds 0	15	30	45
0	30	30	40	50
1	50	70	70	70
2	70	60	60	70
3	70	60	60	70
4	70	70	70	70
5	60	60	60	60
0	60	60	70	60
1	60	60	50	60
2	60	60	60	60
3	50	50	60	80
4	80	80	70	70
5	70	70	70	70
0	70	70	80	80
1	80	80	80	80
2	70	70	40	40
3	60	50	50	40
4	60	60	70	80
5	60	70	70	70

igram Of Observation/Discharge Point

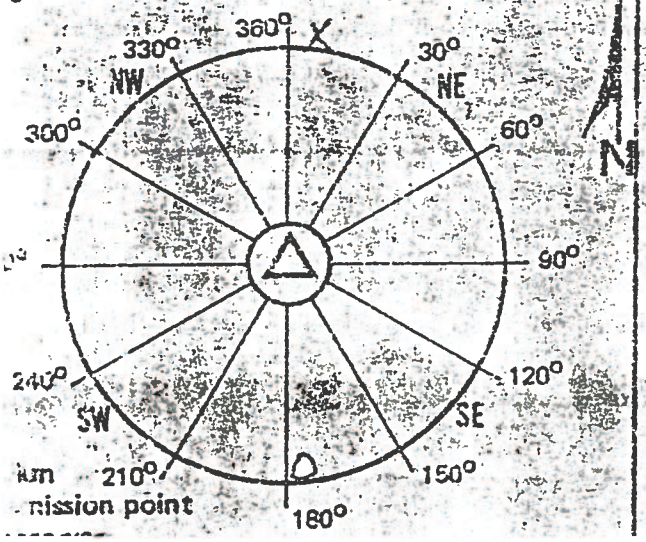

nission point

Remarks: _____

Visible Emissions Evaluation Record

t Name: Hercules Inc
ress: West 7th St.
: Hlwy Miss
ssion Point: 009
: 4-5-84
nission point operation normal ? _____

V. E. Observer: Bobbie Draughn
Certification Expiration: 4-27-84

Set No.	Time		Ocacity	
	Start	End	Sum	Average
1	11 26 Am	11 32 Am	730	30.4
2	11 32 Am	11 38 Am	425	17.7
3	11 38 Am	11 44 Am	180	7.5

Overall Average: 18.5

	Initial	Final
ance to discharge	2 Lengths	
ction to discharge	NNE	
ht of observation point	Ground	
ht of discharge	200 ft	
ne color	Gray	
ne background	Blue Sky	
r vapor in plume ?		
d direction (from)	NW	
d speed	10-15 mph	
ient temperature	60°	
arge temperature		
conditions	Pc.	

Min.	Seconds 0	15	30	45
0	30	30	40	40
1	40	40	40	40
2	50	50	40	30
3	30	30	30	30
4	30	30	10	10
5	10	10	20	20
0	20	20	10	10
1	20	20	20	30
2	25	20	30	30
3	20	20	20	20
4	20	10	10	10
5	10	10	10	10
0	10	10	10	10
1	5	5	5	5
2	10	5	5	10
3	10	10	10	10
4	5	5	5	5
5	10	10	5	5

ram Of Observation/Discharge Point

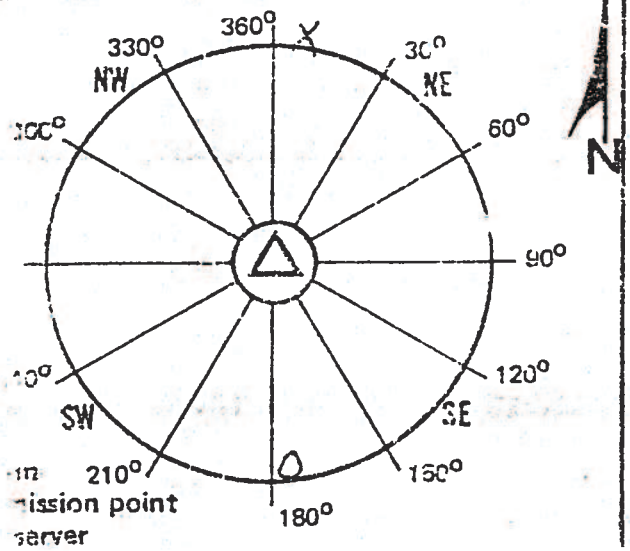

ission point
server

Remarks:
Cleaning # 2 Boiler
Start 10:45
Stop 12:00

Visible Emissions Evaluation Record

ant Name: Hercules Inc

ddress: West 7th St

ty: Hibbing Minn

nission Point: 009

ate: 4-9-84

emission point operation normal ? _____

V. E. Observer: Bobbie Draughn

Certification Expiration: 4-27-84

Set No.	Time Start	Time End	Opacity Sum	Opacity Average
1	10 35 Am	10 41 Am	1000	41.7
2	10 41 Am	10 47 Am	800	33.3
3	10 47 Am	10 53 Am	1030	42.9

Overall Average: 39.3

	Initial	Final
istance to discharge	2 Lengths	
irection to discharge	NNE	
eight of observation point	Ground	
eight of discharge	200 ft	
ume color	Gray	
ume background	Blue Sky	
ater vapor in plume ?		
ind direction (from)	NW	
ind speed	10-15 mph	
mbient temperature		
ischarge temperature		
ky conditions	PC	

Min.	Seconds 0	15	30	45
0	25	25	30	30
1	30	40	40	40
2	40	40	40	40
3	40	40	60	60
4	50	50	50	50
5	50	50	40	40
0	40	30	30	30
1	30	30	30	30
2	30	30	30	30
3	30	30	30	30
4	30	40	40	40
5	40	40	40	40
0	40	40	40	40
1	40	40	40	40
2	40	40	40	40
3	50	50	50	50
4	50	50	50	50
5	40	30	40	40

Diagram Of Observation/Discharge Point

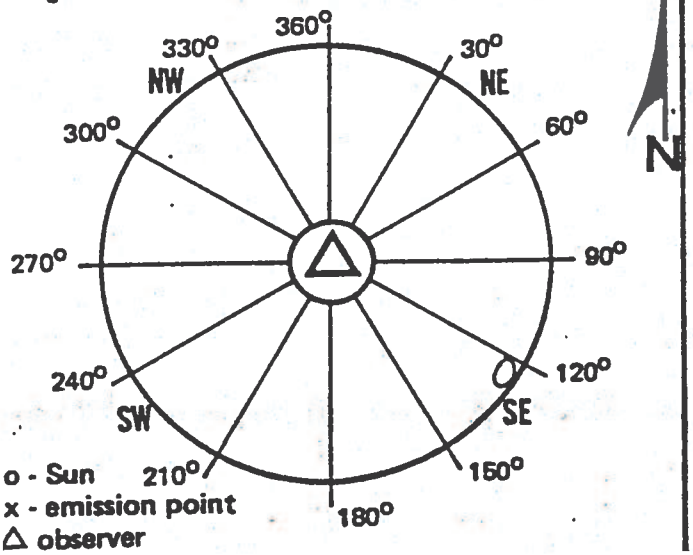

Remarks: _____

Visible Emissions Evaluation Record

ant Name: Hercules Inc.

ddress: West 7th St.

ty: H'burg Miss

nission Point: 009

ite: 4-10-84

emission point operation normal ? _____

V. E. Observer: Bobbie Draughn

Certification Expiration: 4-27-84

Set No.	Time Start	Time End	Opacity Sum	Opacity Average
1	10^00 Am	10^06 Am	2290	95.4
2	10^06 Am	10^12 Am	985	41.0
3	10^12 Am	10^18 Am	570	23.8

Overall Average: 53.4

	Initial	Final
stance to discharge	2 Lengths	
rection to discharge	N	
eight of observation point	Ground	
eight of discharge	200 ft	
ume color	Gray	
ume background	Blue Sky	
ater vapor in plume ?		
ind direction (from)	SE	
ind speed	5-10 mph	
nbient temperature	68°	
scharge temperature		
y conditions	PC	

Min.	Seconds 0	15	30	45
0	50	50	90	100
1	100	100	100	100
2	100	100	100	100
3	100	100	100	100
4	100	100	100	100
5	100	100	100	100
0	100	100	100	100
1	90	70	80	20
2	15	15	15	15
3	15	15	15	15
4	15	20	20	30
5	30	30	30	30
0	30	30	30	30
1	25	25	25	25
2	20	20	20	20
3	20	20	20	20
4	20	20	20	20
5	20	30	30	30

Diagram Of Observation/Discharge Point

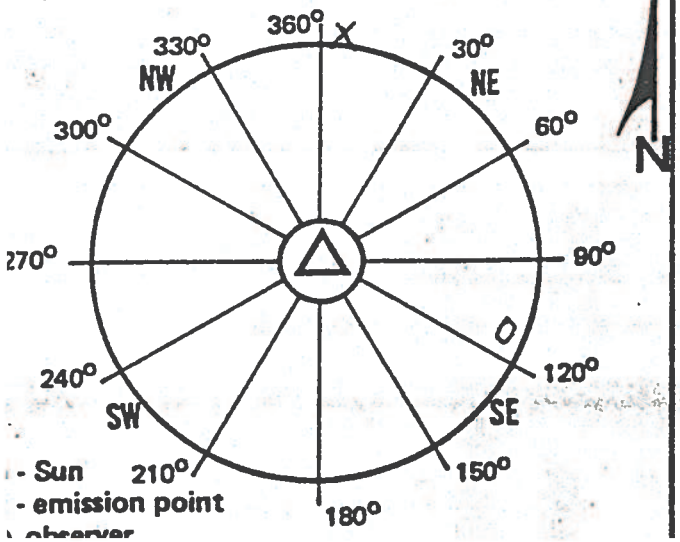

Remarks:

Cleaning #2 Boiler

Start - 7:20

Stop - 10:15

Visible Emissions Evaluation Record

ant Name: Hercules Inc

ddress: West 7th St

ty: H'burg Miss

nission Point: 009

te: 4-12-84

emission point operation normal ? _____

V. E. Observer: Bobbie Draughn

Certification Expiration: 4-27-84

Set No.	Time		Opacity	
	Start	End	Sum	Average
1	10⁴⁰ AM	10⁴⁶ AM	910	37.9
2	10⁴⁶ AM	10⁵² AM	820	34.2
3	10⁵² AM	10⁵⁸ AM	1080	45.0

Overall Average: 39.0

	Initial	Final
stance to discharge	2 Lengths	
rection to discharge	N	
ight of observation point	Ground	
ight of discharge	200 ft	
ume color	Gray	
ume background	Gray Sky	
ter vapor in plume ?		
nd direction (from)	SE	
nd speed	10 mph	
nbient temperature	71°	
scharge temperature		
y conditions	Cloudy	

	Seconds			
Min.	0	15	30	45
0	40	40	40	40
1	40	40	40	40
2	40	40	40	40
3	40	40	40	40
4	35	40	40	40
5	35	35	25	20
0	15	15	25	35
1	40	40	40	40
2	40	40	40	40
3	25	25	30	30
4	40	40	30	30
5	40	40	40	40
0	40	40	40	40
1	50	50	50	50
2	50	40	30	30
3	70	50	50	50
4	40	40	40	40
5	50	40	50	50

Diagram Of Observation/Discharge Point

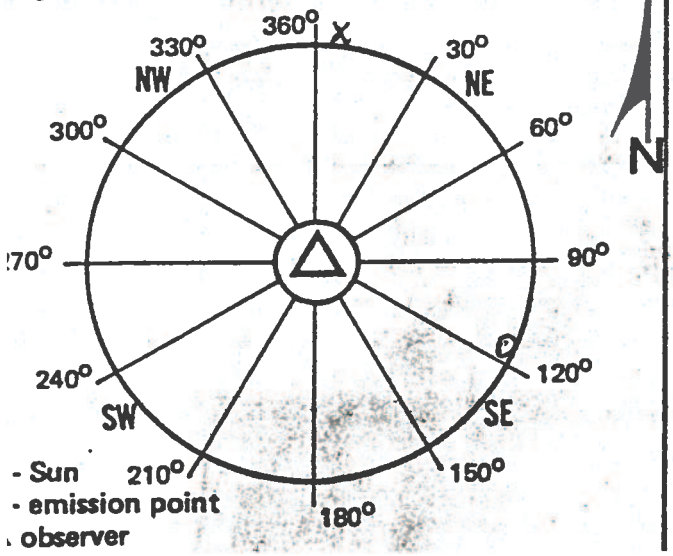

Remarks: _____

Visible Emissions Evaluation Record

ant Name: Hercules Inc

ddress: West 7th St

ty: Hattiesburg Miss

mission Point: 009

ate: 4-13-84

emission point operation normal ? _____

V. E. Observer: Bobbie Draughn

Certification Expiration: 4-27-84

Set No.	Time Start	Time End	Opacity Sum	Opacity Average
1	10:30 Am	10:36 Am	960	40.0
2	10:36 Am	10:42 Am	1480	61.7
3	10:42 Am	10:48 Am	1610	67.1

Overall Average: 56.3

	Initial	Final
istance to discharge	2 Lengths	
irection to discharge	N	
eight of observation point	Ground	
eight of discharge	200 ft	
ume color	Gray & white	
ume background	Gray Sky	
ater vapor in plume ?		
ind direction (from)	W	
ind speed	5-10 mph	
nbient temperature	74°	
scharge temperature		
y conditions	Cloudy	

Min.	Seconds 0	15	30	45
0	40	40	40	40
1	40	40	40	40
2	40	40	30	30
3	40	40	40	40
4	40	40	40	40
5	40	40	50	50
0	60	60	70	70
1	60	60	60	60
2	80	80	60	60
3	50	50	50	50
4	50	50	60	60
5	70	70	70	70
0	80	80	70	70
1	70	60	60	60
2	60	60	60	60
3	70	70	70	70
4	70	70	70	70
5	70	60	60	70

Diagram Of Observation/Discharge Point

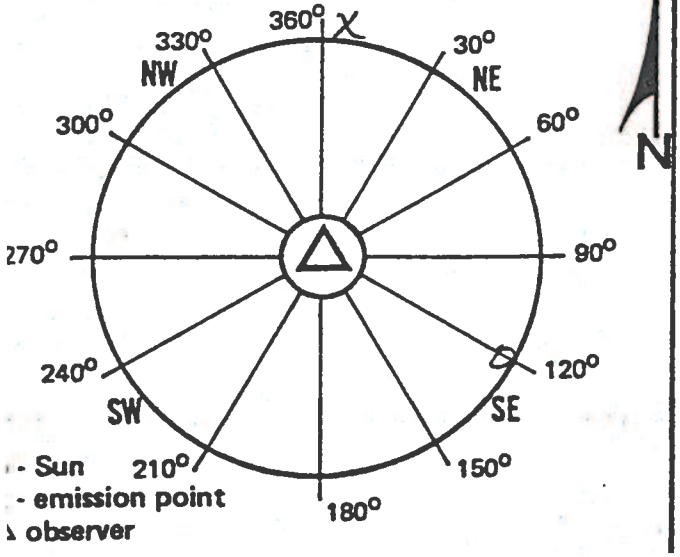

Remarks:

Cleaning

#1 Boiler Start 8:26

Stop 9:45

#2 Boiler Start 11:00

Stop 12:00

Visible Emissions Evaluation Record

ant Name: Hercules Inc
ddress: West 7th St.
ty: Hattiesburg Miss
mission Point: 010
ate: 4-16-84
emission point operation normal ? _____

V. E. Observer: Bobbie Draughon
Certification Expiration: 4-27-84

Set No.	Time		Opacity	
	Start	End	Sum	Average
1	12⁰⁰ N	12⁰⁶ PM	930	38.8
2	12⁰⁶ PM	12¹² PM	720	30.0
3	12¹² PM	12¹⁸ PM	480	20.0

Overall Average: 29.6

	Initial	Final
istance to discharge	2 Lengths	
irection to discharge	N	
eight of observation point	Ground	
eight of discharge	225 ft	
ume color	Gray	
ume background	Gray Sky	
ater vapor in plume ?		
ind direction (from)	W	
ind speed	10 mph	
mbient temperature	65°	
scharge temperature		
y conditions	Cloudy	

Min.	Seconds 0	15	30	45
0	50	40	40	40
1	40	40	40	40
2	40	40	40	40
3	30	30	30	30
4	40	40	30	30
5	40	60	50	30
0	30	30	25	25
1	30	30	30	30
2	25	25	30	30
3	30	30	30	30
4	40	40	30	30
5	30	30	30	30
0	30	30	30	30
1	25	25	25	25
2	20	20	30	30
3	25	25	20	20
4	15	15	10	10
5	5	5	5	5

Remarks: _____

Diagram Of Observation/Discharge Point

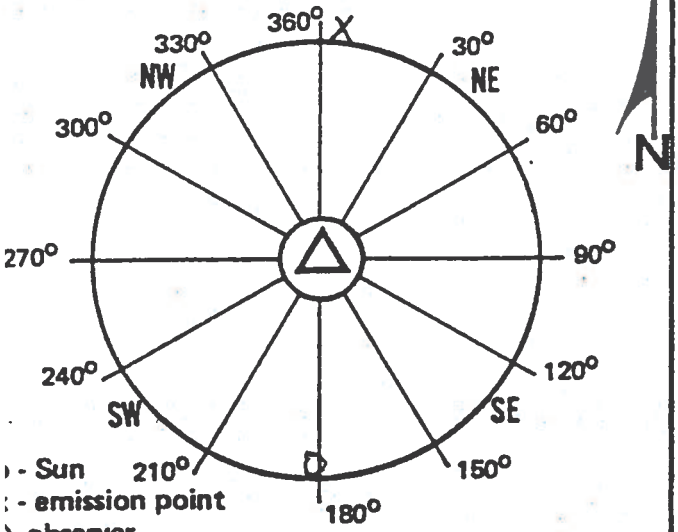

) - Sun
: - emission point
\ observer

HERCULES

Visible Emissions Evaluation Record

Plant Name: Hercules Inc

Address: West 7th St

City: Hilbury Miss

Emission Point: 010

Date: 4-17-84

Is emission point operation normal ? _____

V. E. Observer: Bobbie Droughn

Certification Expiration: 4-27-84

Set No.	Time Start	Time End	Opacity Sum	Opacity Average
1	10 50 Am	10 46 Am	1130	47.1
2	10 46 Am	10 52 Am	740	30.8
3	10 52 Am	10 58 Am	560	23.3

Overall Average: 33.7

	Initial	Final
Distance to discharge	2 Lengths	
Direction to discharge	N	
Height of observation point	Ground	
Height of discharge	225 ft	
Plume color	Gray & Brown	
Plume background	Blue Sky	
Water vapor in plume ?		
Wind direction (from)	W	
Wind speed	10 mph	
Ambient temperature	66°	
Discharge temperature		
Sky conditions	PC	

Min.	Seconds 0	15	30	45
0	60	60	80	90
1	90	70	25	20
2	25	20	20	20
3	30	30	25	25
4	50	50	50	80
5	80	70	30	30
0	25	25	20	20
1	25	25	25	25
2	90	90	70	15
3	20	20	20	25
4	25	25	25	25
5	25	25	25	25
0	25	25	20	15
1	15	15	20	20
2	25	25	25	25
3	25	25	30	30
4	30	30	15	25
5	25	20	25	25

Diagram Of Observation/Discharge Point

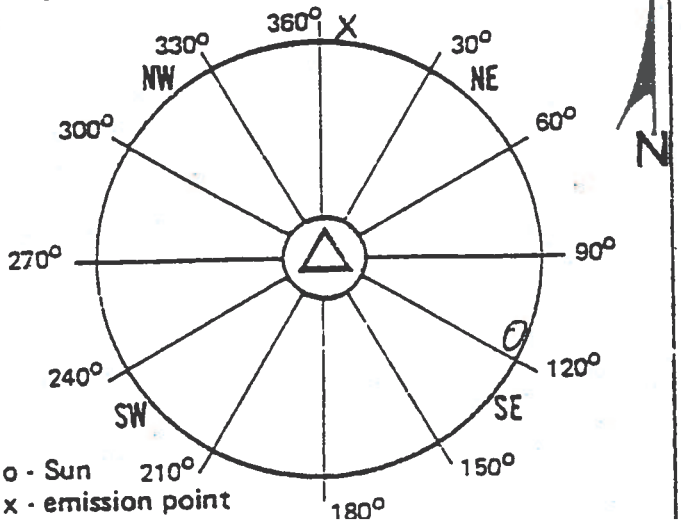

Remarks:

Cleaning Boiler #4

Start 9:00

Stop 10:30

HERCULES

Visible Emissions Evaluation Record

Plant Name: Hercules Inc

Address: West 7th St.

City: Hilsup Miss

Emission Point: 010

Date: 4-24-84

Is emission point operation normal? _____

V. E. Observer: Bobbie Draughn

Certification Expiration: 4-27-84

Set No.	Time Start	Time End	Opacity Sum	Opacity Average
1	9[15] Am	9[21] Am	290	12.1
2	9[21] Am	9[27] Am	645	26.9
3	9[27] Am	9[33] Am	1120	46.7

Overall Average: 28.6

	Initial	Final
Distance to discharge	2 Lengths	
Direction to discharge	N	
Height of observation point	Ground	
Height of discharge	225 ft	
Plume color	White	
Plume background	Blue Sky	
Water vapor in plume?		
Wind direction (from)	W	
Wind speed	5 mph	
Ambient temperature	71°	
Discharge temperature		
Sky conditions	Clear	

Min.	Seconds 0	15	30	45
0	10	15	15	10
1	10	10	10	10
2	10	10	10	10
3	10	10	15	15
4	20	15	15	15
5	15	10	10	10
0	20	20	15	25
1	15	15	20	20
2	30	40	40	40
3	35	30	25	20
4	25	25	30	30
5	25	30	30	40
0	40	30	30	35
1	35	35	25	20
2	25	40	35	40
3	40	50	60	75
4	75	75	60	60
5	60	55	50	70

Diagram Of Observation/Discharge Point

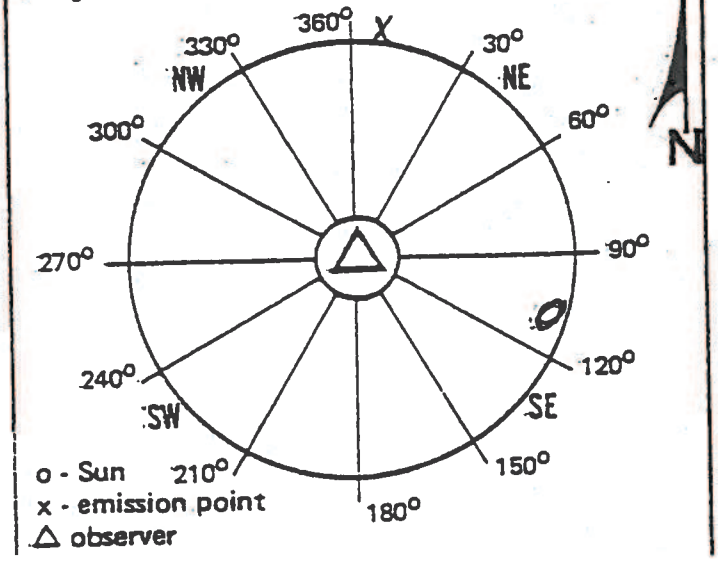

Remarks:

Cleaning #4 Boiler

START 9:00

STOP 10:30

Received By: _____

HERCULES

Visible Emissions Evaluation Record

Plant Name: Hercules Inc

Address: West 7th St

City: Hibbing Minn

Emission Point: 009

Date: 4-25-84

Is emission point operation normal ? _____

V. E. Observer: Bobbie Droughn

Certification Expiration: 4-27-84

Set No.	Time Start	Time End	Opacity Sum	Opacity Average
1	10 00 AM	10 06 AM	1610	67.1
2	10 06 AM	10 12 AM	1660	69.2
3	10 12 AM	10 18 AM	1470	61.3

Overall Average: 65.9

	Initial	Final
Distance to discharge	2 Lengths	
Direction to discharge	N	
Height of observation point	Ground	
Height of discharge	200 ft	
Plume color	White	
Plume background	Blue Sky	
Water vapor in plume ?		
Wind direction (from)	S	
Wind speed	10 mph	
Ambient temperature	79°	
Discharge temperature		
Sky conditions	Clear	

Min.	Seconds 0	15	30	45
0	40	40	40	50
1	60	60	70	70
2	70	80	60	70
3	70	70	70	70
4	80	80	80	70
5	70	80	80	80
0	80	80	80	80
1	80	70	70	70
2	70	60	60	60
3	70	70	70	70
4	70	60	60	70
5	70	70	60	60
0	60	60	50	60
1	60	60	60	60
2	60	60	60	80
3	60	60	60	70
4	60	70	60	60
5	60	60	60	60

Diagram Of Observation/Discharge Point

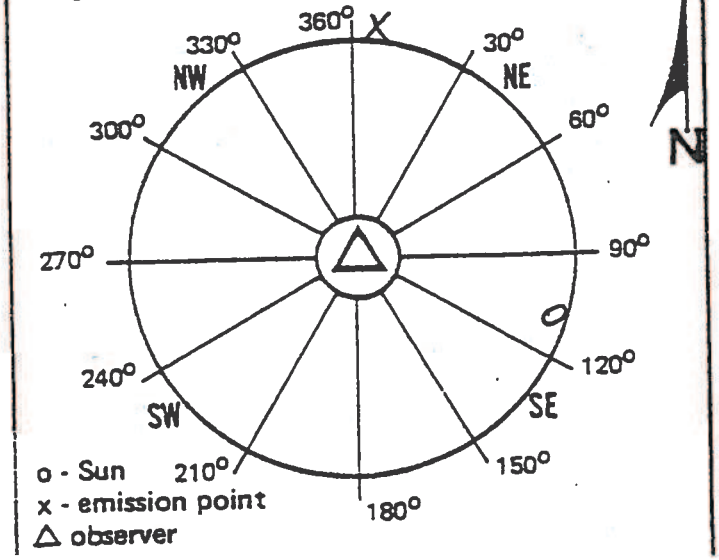

Remarks: _____

Received By: _____

HERCULES

Visible Emissions Evaluation Record

Plant Name: Hercules Inc

Address: West 7th St

City: K'burg Miss

Emission Point: 010

Date: 4-25-84

Is emission point operation normal ? _____

V. E. Observer: Bobbie Draughn

Certification Expiration: 4-27-84

Set No.	Time Start	Time End	Opacity Sum	Opacity Average
1	10 00 Am	10 06 Am	490	20.4
2	10 06 Am	10 12 Am	525	21.9
3	10 12 Am	10 18 Am	950	39.6

Overall Average: 27.3

	Initial	Final
Distance to discharge	2 Lengths	
Direction to discharge	N	
Height of observation point	Ground	
Height of discharge	225 ft	
Plume color	white	
Plume background	Blue Sky	
Water vapor in plume ?		
Wind direction (from)	S	
Wind speed	10 mph	
Ambient temperature	79°	
Discharge temperature		
Sky conditions	Clear	

Min.	Seconds 0	15	30	45
0	20	20	20	10
1	10	15	15	15
2	20	20	15	10
3	15	15	10	10
4	10	10	50	50
5	30	30	30	40
0	30	25	25	25
1	25	20	20	20
2	20	15	15	15
3	20	20	15	15
4	15	15	15	25
5	30	40	30	30
0	20	15	20	20
1	20	20	20	15
2	20	20	30	30
3	60	70	80	70
4	70	70	40	40
5	40	50	60	50

Diagram Of Observation/Discharge Point

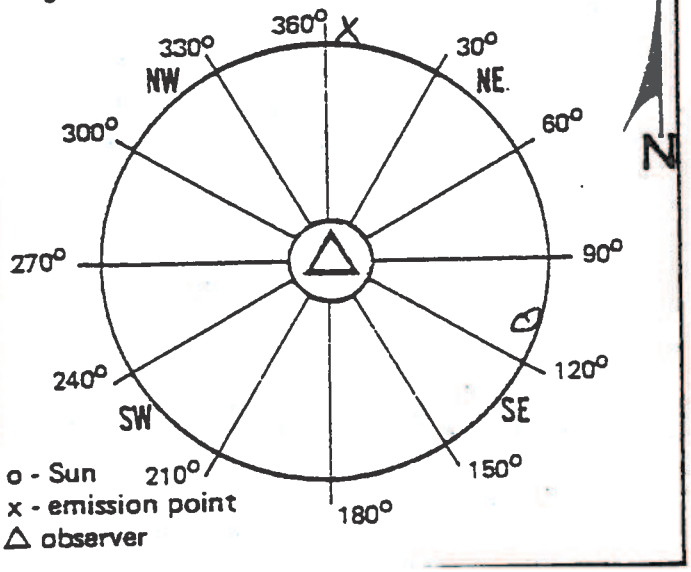

Remarks:

Cleaning Boiler #4 Start 9:15
Stop 10:30

Received By: _____

HERCULES

Visible Emissions Evaluation Record

Plant Name: Hercules Inc

Address: West 7th St

City: Hattiesburg Miss

Emission Point: 009

Date: 4-26-84

Is emission point operation normal ?

V. E. Observer: Bobbie Draughn

Certification Expiration: 4-27-84

Set No.	Time Start	Time End	Opacity Sum	Opacity Average
1	11 00 Am	11 06 Am	1290	53.8
2	11 06 Am	11 12 Am	480	20.0
3	11 12 Am	11 18 Am	320	13.3

Overall Average: 29.0

	Initial	Final
Distance to discharge	2 Lengths	
Direction to discharge	N	
Height of observation point	Ground	
Height of discharge	200 ft	
Plume color	Gray	
Plume background	Gray Sky	
Water vapor in plume ?		
Wind direction (from)	SE	
Wind speed	10 mph	
Ambient temperature	80°	
Discharge temperature		
Sky conditions	Cloudy	

Min.	Seconds 0	15	30	45
0	40	40	40	40
1	50	65	65	60
2	70	70	70	70
3	70	60	60	50
4	50	50	50	50
5	50	40	40	40
0	30	30	25	20
1	20	20	15	15
2	15	15	25	25
3	25	30	25	25
4	20	20	15	10
5	10	15	15	15
0	20	20	15	15
1	10	10	10	10
2	10	10	10	10
3	15	15	15	15
4	15	20	20	15
5	10	10	10	10

Diagram Of Observation/Discharge Point

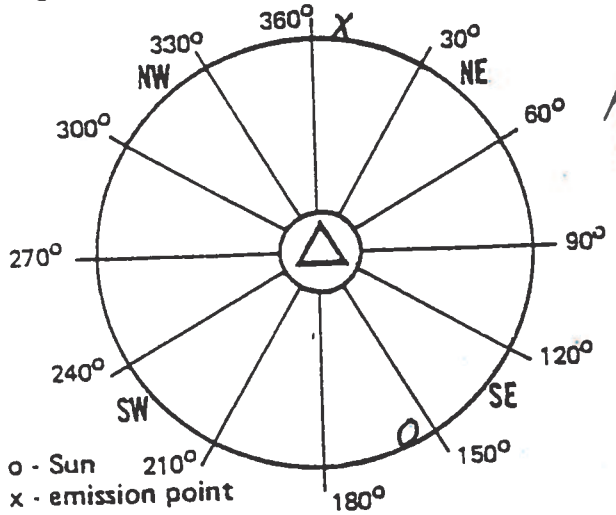

Remarks:

Clean Boiler #1 START 10:40

STOP 11:35

Forest

HERCULES

RECEIVED
1984 APR 17 AM 9:16
MISS. DEPT. OF NATURAL RESOURCES
BUREAU OF POLLUTION CONTROL

Hercules Incorporated
West 7th Street
P.O. Box 1937
Hattiesburg, MS 39401
(601) 545-3450

April 13, 1984

Mr. Dwight K. Wylie, P.E. Chief
Air Division
Bureau of Pollution Control
P. O. Box 10385
Jackson, Mississippi 39209

Dear Mr. Wylie:

In reference to operating Permit No. 0800-0001, please find the attached monthly report detailing the compliance status of the boilers for emission points 009 and 010.

We will continue to submit this report on a monthly basis.

Very truly yours.

Charles Jordan

Charles Jordan
Environmental Supervisor

CSJ:sw

Attachments

Visible Emissions Evaluation Record

it Name: Hercules Inc.
dress: West 7th St
: H'burg Miss
ission Point: 010
e: 3-1-84
mission point operation normal? ____

V. E. Observer: Bobbie Draughn
Certification Expiration: 4-27-84

Set No.	Time Start	Time End	Opacity Sum	Opacity Average
1	10 40 Am	10 46 Am	675	28.1
2	10 46 Am	10 52 Am	970	40.4
3	10 52 Am	10 58 Am	1210	50.4

Overall Average: 39.6

	Initial	Final
tance to discharge	2 Lengths	
ection to discharge	NNE	
ight of observation point	Ground	
ight of discharge	225 ft.	
ume color	Gray	
ume background	Gray	Sky
ater vapor in plume?		
ind direction (from)	SW	
ind speed	5-10 mph	
mbient temperature	59°	
ischarge temperature		
ky conditions	Cloudy	

Min.	Seconds 0	15	30	45
0	25	30	30	40
1	30	30	25	25
2	25	25	40	40
3	30	30	25	25
4	25	25	25	25
5	25	25	25	25
0	35	35	35	50
1	40	30	25	30
2	30	40	50	70
3	60	50	50	40
4	40	40	30	30
5	40	40	40	40
0	40	40	40	40
1	40	70	70	70
2	80	60	50	40
3	30	30	40	50
4	60	60	60	50
5	50	50	50	40

Diagram Of Observation/Discharge Point

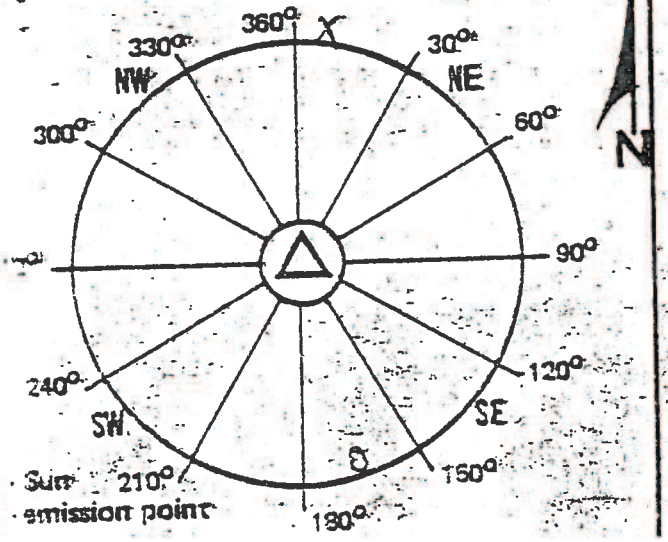

Remarks: Cleaning # 4 Boiler
Start 8:50
Stop 10:25

Visible Emissions Evaluation Record

t Name: Hercules Inc.

ress: West 7th St

: Hattiesburg Miss

ssion Point: 010

e: 3-1-84

nission point operation normal ? _____

V. E. Observer: Bobbie Draughn

Certification Expiration: 4-27-84

Set No.	Time		Opacity	
	Start	End	Sum	Average
1	11 00 Am	11 06 Am	860	35.8
2	11 06 Am	11 12 Am	745	31.0
3	11 12 Am	11 18 Am	755	31.5

Overall Average: 32.8

	Initial	Final
ance to discharge	2 Lengths	
ction to discharge	NNE	
ght of observation point	Ground	
ght of discharge	225 ft.	
ne color	Gray	
ne background	Blue Sky	
er vapor in plume ?		
d direction (from)	SE	
d speed	10 mph	
bient temperature	48°	
charge temperature		
conditions	Clear	

Min.	Seconds 0	15	30	45
0	40	60	50	20
1	40	40	25	25
2	25	30	25	25
3	25	25	30	30
4	30	25	20	20
5	50	80	90	60
0	40	30	50	30
1	30	40	30	50
2	30	20	50	30
3	30	30	25	25
4	25	30	25	25
5	25	20	25	30
0	25	25	30	30
1	30	40	80	60
2	80	50	40	30
3	20	20	20	20
4	15	15	20	15
5	30	20	20	20

agram Of Observation/Discharge Point

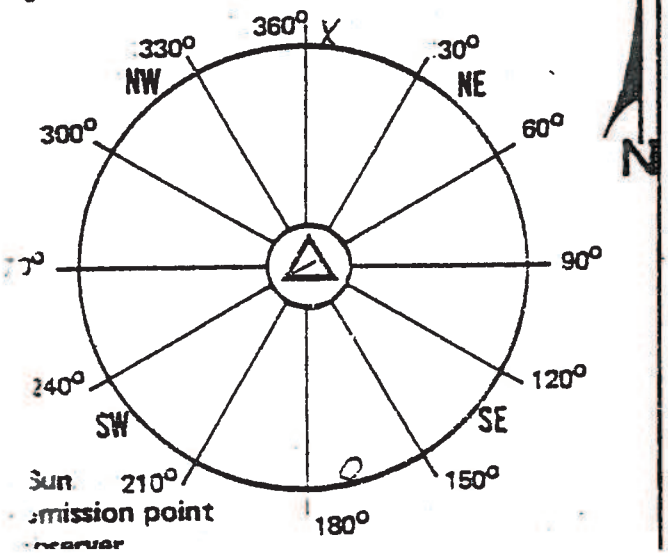

Remarks: _____

Visible Emissions Evaluation Record

lant Name: Hercules, Inc.

ddress: West 7th St.

ity: H'burg Miss

mission Point: 009

late: 3-6-84

s emission point operation normal ? _____

V. E. Observer: Bobbie Draughn

Certification Expiration: 4-27-84

Set No.	Time		Opacity	
	Start	End	Sum	Average
1	12°5 pm	12 11 pm	2210	92.1
2	12 11 pm	12 17 pm	2060	85.8
3	12 17 pm	12 23 pm	670	27.9

Overall Average: 68.6

	Initial	Final
Distance to discharge	2 Lengths	
Direction to discharge	NNE	
Height of observation point	Ground	
Height of discharge	200 ft	
Plume color	Gray	
Plume background	Gray Sky	
Water vapor in plume?		
Wind direction (from)	NW	
Wind speed	10-20 mph	
Ambient temperature	45°	
Discharge temperature		
Sky conditions	Cloudy + Rain	

	Seconds			
Min.	0	15	30	45
0	90	90	80	80
1	80	100	100	90
2	90	90	90	90
3	90	90	100	100
4	100	100	100	90
5	100	90	90	100
0	100	100	90	90
1	90	90	90	90
2	90	90	90	90
3	90	90	100	100
4	100	90	90	90
5	70	60	40	40
0	40	50	50	40
1	40	40	40	30
2	25	25	25	25
3	25	25	25	20
4	20	20	20	20
5	15	15	15	20

Diagram Of Observation/Discharge Point

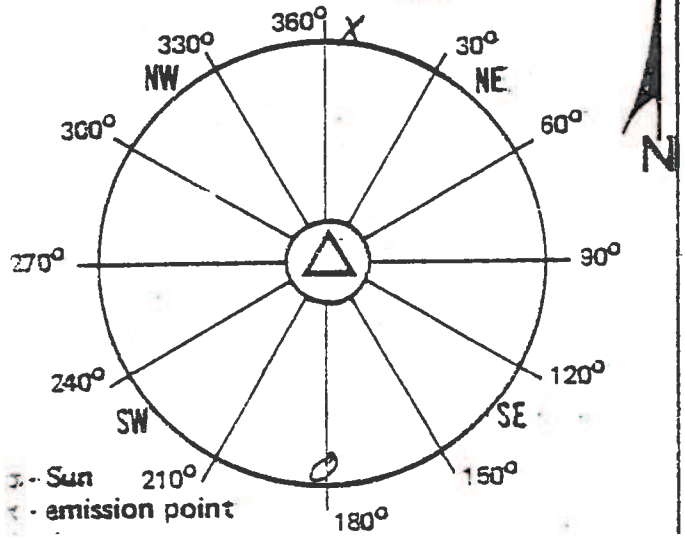

Remarks: Cleaning #2 Boiler

Start 10:30

Stop 12:45

Visible Emissions Evaluation Record

rt Name: Hercules Inc.

dress: West 7th St.

: Hattiesburg Miss

ission Point: 010

e: 3-6-84

mission point operation normal?

V. E. Observer: Bobbie Draughn

Certification Expiration: 4-27-84

Set No.	Time		Opacity	
	Start	End	Sum	Average
1	12⁰⁰ pm	12 16 pm	710	29.6
2	12 16 pm	12 32 pm	655	27.3
3	12 32 pm	12 48 pm	910	37.9

Overall Average: 31.6

	Initial	Final
tance to discharge	2 Lengths	
ection to discharge	NNE	
ight of observation point	Ground	
ight of discharge	225 ft	
ime color	Gray	
ume background	Gray Sky	
ter vapor in plume?		
nd direction (from)	NW	
nd speed	10-20 mph	
mbient temperature	45°	
scharge temperature		
y conditions	Cloudy + Rain	

Min.	Seconds 0	15	30	45
0	20	20	20	30
1	30	30	30	30
2	30	30	30	30
3	30	40	50	40
4	30	30	30	30
5	25	25	25	25
0	30	30	25	25
1	25	25	25	25
2	25	25	25	25
3	25	25	25	25
4	25	40	30	40
5	25	25	30	30
0	50	40	30	80
1	30	30	25	25
2	25	30	50	30
3	30	25	25	30
4	25	30	90	40
5	40	70	30	30

Diagram Of Observation/Discharge Point

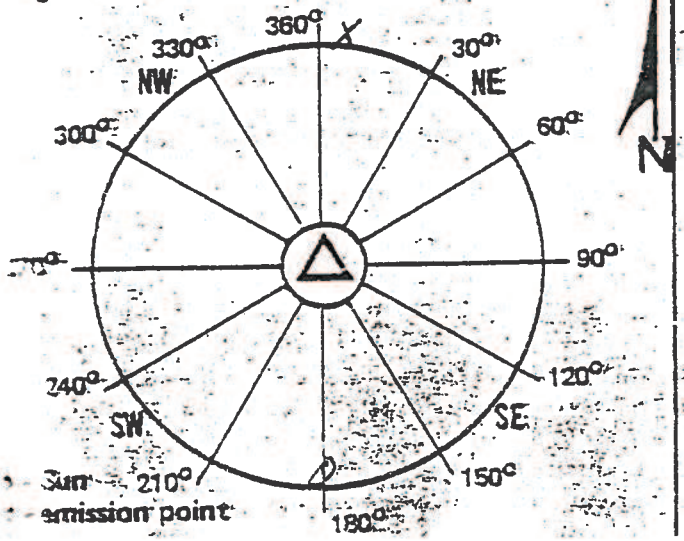

Sun
emission point

Remarks:

Visible Emissions Evaluation Record

ant Name: Hercules Inc.

ddress: West 7th St.

ity: Hattiesburg Miss.

mission Point: 010

ate: 3-8-84

emission point operation normal?

V. E. Observer: Bobbie Draughn

Certification Expiration: 4-27-84

Set No.	Time Start	Time End	Opacity Sum	Opacity Average
1	10 40 AM	10 46 AM	590	24.6
2	10 46 AM	10 52 AM	800	33.3
3	10 52 AM	10 58 AM	660	27.5

Overall Average: 28.5

	Initial	Final
Distance to discharge	2 Lengths	
Direction to discharge	NNE	
Height of observation point	Ground	
Height of discharge	225 ft	
Plume color	Gray	
Plume background	Blue Sky	
Water vapor in plume?		
Wind direction (from)	W	
Wind speed	5 mph	
Ambient temperature	60°	
Discharge temperature		
Sky conditions	Clear	

Min.	Seconds 0	15	30	45
0	15	25	25	25
1	25	25	25	25
2	25	25	25	25
3	25	20	20	20
4	25	30	30	30
5	25	25	25	25
6	30	30	30	40
7	30	30	30	30
8	40	30	30	40
9	40	40	40	40
10	40	30	30	30
11	30	30	30	30
12	30	25	60	30
13	20	20	40	30
14	25	20	20	15
15	10	10	30	40
16	40	40	30	15
17	10	10	30	60

Diagram Of Observation/Discharge Point

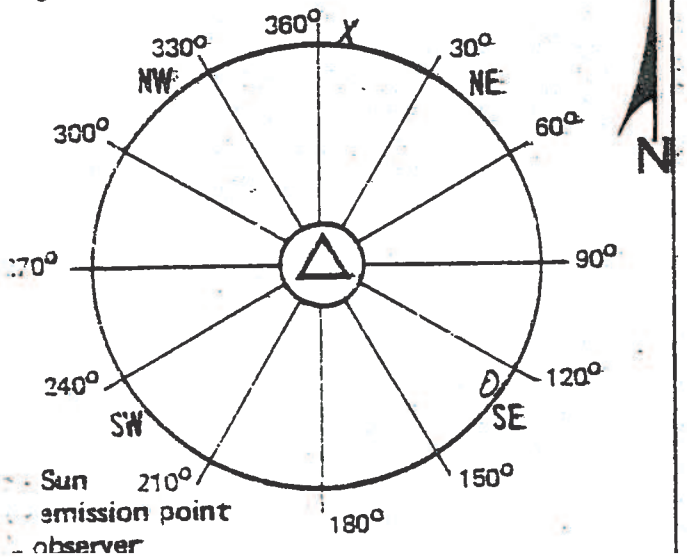

Remarks:

Visible Emissions Evaluation Record

it Name: Hercules Inc.
dress: West 7th St.
r: Hibbing Minn.
ission Point: 009
e: 3-8-84
mission point operation normal ?

V. E. Observer: Bobbie Draughn
Certification Expiration: 4-27-84

Set No.	Time Start	Time End	Opacity Sum	Opacity Average
1	10 40 Am	10 46 Am	175	7.3
2	10 46 Am	10 52 Am	1000	41.7
3	10 52 Am	10 58 Am	840	35.0

Overall Average: 28.0

	Initial	Final
tance to discharge	2 Lengths	
ection to discharge	NNE	
ight of observation point	Ground	
ight of discharge	200 ft	
me color	Gray	
me background	Blue Sky	
ter vapor in plume ?		
nd direction (from)	W	
nd speed	5 mph	
nbient temperature	60°	
scharge temperature		
y conditions	Clear	

Min.	Seconds 0	15	30	45
0	5	5	5	5
1	5	5	5	5
2	5	5	5	5
3	5	5	5	5
4	5	5	5	10
5	20	15	15	20
0	30	50	60	50
1	50	40	50	60
2	50	50	50	40
3	30	40	30	30
4	40	30	30	40
5	30	40	40	40
0	40	40	30	30
1	30	30	40	40
2	50	50	50	40
3	30	30	30	30
4	30	30	30	20
5	25	25	40	50

Diagram Of Observation/Discharge Point:

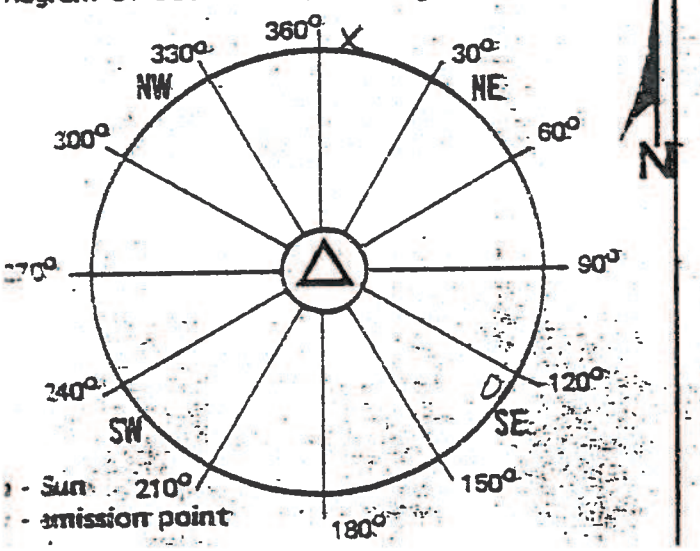

Remarks: Cleaning #2 Boiler
START 10:50
STOP 12:10

Visible Emissions Evaluation Record

Plant Name: Hercules Inc.

Address: West 7th St.

City: Hlbug Miss

Emission Point: 010

Date: 3-9-84

Is emission point operation normal ? _____

V. E. Observer: Bobbie Draughn

Certification Expiration: 4-27-84

Set No.	Time Start	Time End	Opacity Sum	Opacity Average
1	10 55 Am	11 0 Am	1160	48.3
2	11 0 Am	11 07 Am	925	38.5
3	11 07 Am	11 13 Am	1070	44.6

Overall Average: 43.8

	Initial	Final
Distance to discharge	2 Lengths	
Direction to discharge	NNE	
Height of observation point	Ground	
Height of discharge	225 ft	
Plume color	Gray & white	
Plume background	Blue Sky	
Water vapor in plume ?		
Wind direction (from)	N-E	
Wind speed	5-10 mph	
Ambient temperature	50°	
Discharge temperature		
Sky conditions	Clear	

Min.	Seconds 0	15	30	45
0	30	40	40	50
1	60	50	60	60
2	60	60	60	60
3	60	50	50	50
4	50	40	40	50
5	40	30	40	30
0	30	30	30	30
1	40	40	50	50
2	60	50	50	50
3	40	30	30	30
4	25	30	30	40
5	40	40	40	40
0	40	40	50	50
1	40	40	40	60
2	50	50	50	40
3	40	40	40	40
4	40	50	50	50
5	40	40	50	40

Diagram Of Observation/Discharge Point

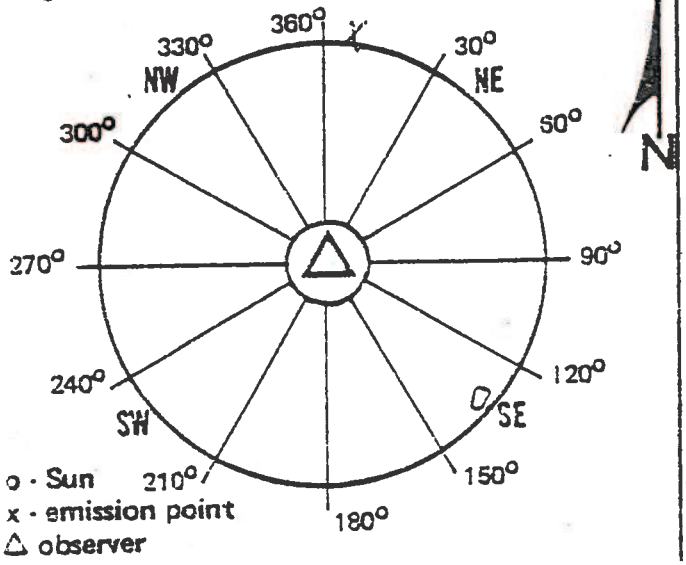

Remarks: Cleaning # 2 Boiler

Start 10:50

Stop 12:10

Received By: _____

Visible Emissions Evaluation Record

Plant Name: Hercules Inc.

Address: West 7th Street

City: Hlwg Miss.

Emission Point: 010

Date: 3-12-84

Is emission point operation normal ? _____

V. E. Observer: Bobbie Draughn

Certification Expiration: 4-27-84

Set No.	Time Start	Time End	Opacity Sum	Opacity Average
1	10 35 Am	10 41 Am	650	27.1
2	10 41 Am	10 47 Am	1210	50.4
3	10 47 Am	10 53 Am	1240	51.7

Overall Average: 43.1

	Initial	Final
Distance to discharge	2 Lengths	
Direction to discharge	NNE	
Height of observation point	Ground	
Height of discharge	225 ft	
Plume color	Gray	
Plume background	Gray Sky	
Water vapor in plume ?		
Wind direction (from)	NW	
Wind speed	5 mph	
Ambient temperature	57°	
Discharge temperature		
Sky conditions	Cloudy	

Min.	Seconds 0	= 15	30	45
0	30	30	25	25
1	25	25	25	25
2	25	25	25	25
3	25	25	25	25
4	30	30	30	30
5	30	30	30	30
0	25	25	30	30
1	30	30	30	30
2	40	50	50	50
3	60	70	70	70
4	70	70	60	70
5	60	60	70	60
0	60	60	60	60
1	50	50	60	60
2	50	50	40	40
3	50	50	50	50
4	50	50	40	40
5	40	40	40	100

Diagram Of Observation/Discharge Point

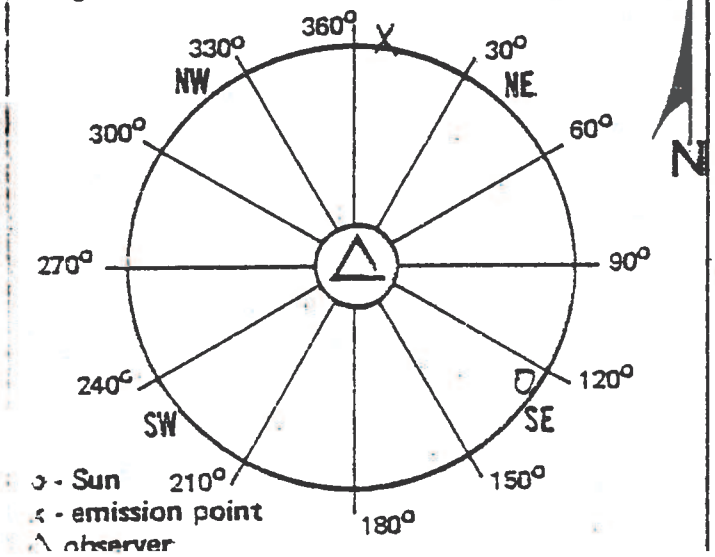

Remarks: _____

Visible Emissions Evaluation Record

Plant Name: Hercules Inc.

Address: West 7th Street

City: Hburg Miss

Emission Point: 009

Date: 3-12-84

Is emission point operation normal ?

V. E. Observer: Bobbie Draughn

Certification Expiration: 4-27-84

Set No.	Time Start	Time End	Opacity Sum	Opacity Average
1	10 33 Am	10 41 Am	2270	94.6
2	10 41 Am	10 47 Am	1710	71.3
3	10 47 Am	10 53 Am	1260	52.5

Overall Average: 72.8

	Initial	Final
Distance to discharge	2 Lengths	
Direction to discharge	NNE	
Height of observation point	Ground	
Height of discharge	200 ft	
Plume color	Gray + Orange	
Plume background	Gray Sky	
Water vapor in plume ?		
Wind direction (from)	NW	
Wind speed	5 mph	
Ambient temperature	57°	
Discharge temperature		
Sky conditions	Cloudy	

Diagram Of Observation/Discharge Point

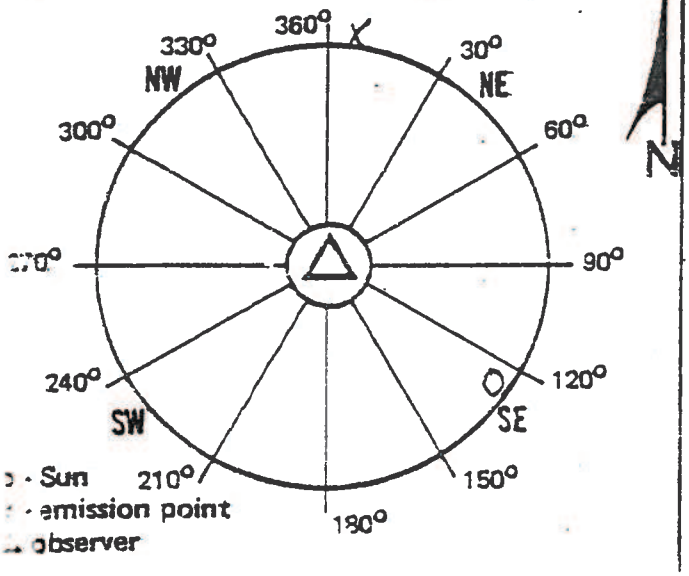

Min.	Seconds 0	15	30	45
0	100	100	100	100
1	100	100	100	100
2	90	90	100	100
3	100	100	100	100
4	90	90	90	90
5	90	80	80	80
0	80	80	80	80
1	80	80	80	80
2	80	80	80	80
3	80	80	70	70
4	60	60	50	50
5	50	60	60	60
0	50	50	50	60
1	50	50	60	60
2	50	60	50	50
3	50	50	50	50
4	50	50	50	50
5	50	50	60	60

Remarks:

Received By:

Visible Emissions Evaluation Record

Plant Name: Hercules Inc.

Address: West 7th St.

City: Hattiesburg Miss

Emission Point: 010

Date: 3-13-84

Is emission point operation normal ?

V. E. Observer: Bobbie Draughn

Certification Expiration: 4-27-84

Set No.	Time Start	Time End	Opacity Sum	Opacity Average
1	10 35 Am	10 41 Am	1175	49.0
2	10 41 Am	10 47 Am	1125	46.9
3	10 47 Am	10 53 Am	520	21.7

Overall Average: 39.2

	Initial	Final
Distance to discharge	2 Lengths	
Direction to discharge	NNE	
Height of observation point	Ground	
Height of discharge	225 ft	
Plume color	Gray	
Plume background	Gray	Sky
Water vapor in plume ?		
Wind direction (from)	N	
Wind speed	5 mph	
Ambient temperature	69°	
Discharge temperature		
Sky conditions	Cloudy	

Diagram Of Observation/Discharge Point

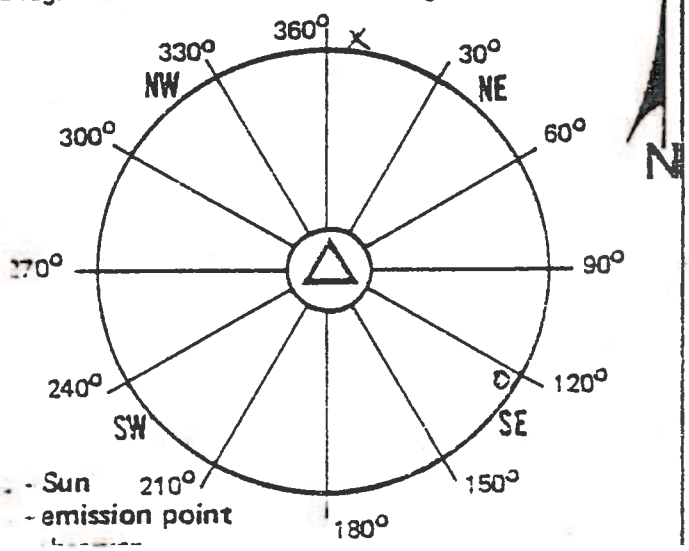

Min.	Seconds 0	15	30	45
0	40	40	20	20
1	15	15	40	50
2	50	50	40	50
3	60	50	60	50
4	50	70	60	60
5	60	75	75	75
0	75	60	70	70
1	60	60	50	50
2	40	40	40	40
3	40	50	50	50
4	40	50	40	30
5	30	30	30	30
0	25	25	30	30
1	20	20	20	20
2	20	20	20	20
3	25	25	20	20
4	20	20	15	15
5	20	20	25	25

Remarks: Cleaning # 3 Boiler

Start 8:40

Stop 10:40

Visible Emissions Evaluation Record

Plant Name: Hercules Inc.

Address: West 7th St.

City: Hattiesburg Miss

Emission Point: 010

Date: 3-14-84

Is emission point operation normal ? _____

V. E. Observer: Bobbie Draughn

Certification Expiration: 4-27-84

Set No.	Time		Opacity	
	Start	End	Sum	Average
1	10 40 Am	10 46 Am	985	41.0
2	10 46 Am	10 52 Am	970	40.4
3	10 52 Am	10 58 Am	900	37.5

Overall Average: 39.6

	Initial	Final
Distance to discharge	2 Lengths	
Direction to discharge	NNE	
Height of observation point	Ground	
Height of discharge	225 ft	
Plume color	White	
Plume background	Blue Sky	
Water vapor in plume ?		
Wind direction (from)	SE	
Wind speed	5 mph	
Ambient temperature	68°	
Discharge temperature		
Sky conditions	Clear	

	Seconds			
Min.	0	15	30	45
0	30	30	30	30
1	25	40	40	40
2	40	30	50	40
3	40	40	40	40
4	50	50	50	50
5	50	50	50	50
0	40	40	50	50
1	50	50	60	60
2	50	50	50	50
3	40	40	30	30
4	30	30	25	25
5	30	30	30	30
0	30	40	40	40
1	30	30	30	30
2	30	30	30	25
3	25	30	40	40
4	50	50	50	50
5	50	50	40	40

Diagram Of Observation/Discharge Point

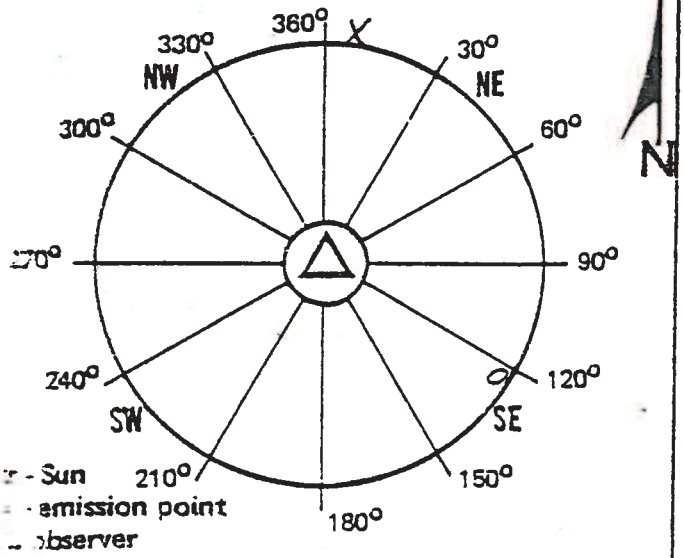

Remarks: Cleaning # 3 Boiler

Start 9:01

Stop 10:50

Received By: _____

F. P.

Visible Emissions Evaluation Record

Plant Name: Hercules, Inc.

Address: West 7th St.

City: Hilang Miss.

Emission Point: 009

Date: 3-14-84

Is emission point operation normal ?

V. E. Observer: Bobbie Draughn

Certification Expiration: 4-27-84

Set No.	Time		Opacity	
	Start	End	Sum	Average
1	10 ^{40} AM	10 ^{46} AM	1810	75.4
2	10 ^{46} AM	10 ^{52} AM	1850	77.1
3	10 ^{52} AM	10 ^{58} AM	1410	58.8

Overall Average: 70.4

	Initial	Final
Distance to discharge	2 Lengths	
Direction to discharge	NNE	
Height of observation point	Ground	
Height of discharge	200 ft	
Plume color	White	
Plume background	Blue Sky	
Water vapor in plume ?		
Wind direction (from)	SE	
Wind speed	5 mph	
Ambient temperature	68°	
Discharge temperature		
Sky conditions	Clear	

Min.	Seconds 0	15	30	45
0	80	80	80	80
1	80	60	80	80
2	80	100	90	100
3	70	70	80	70
4	70	70	70	60
5	50	70	70	70
0	70	60	50	60
1	60	60	80	80
2	70	60	100	90
3	100	100	90	100
4	90	80	80	80
5	80	70	70	70
0	70	70	70	70
1	70	90	90	90
2	90	100	100	100
3	100	70	50	30
4	30	30	30	20
5	10	10	10	10

Diagram Of Observation/Discharge Point

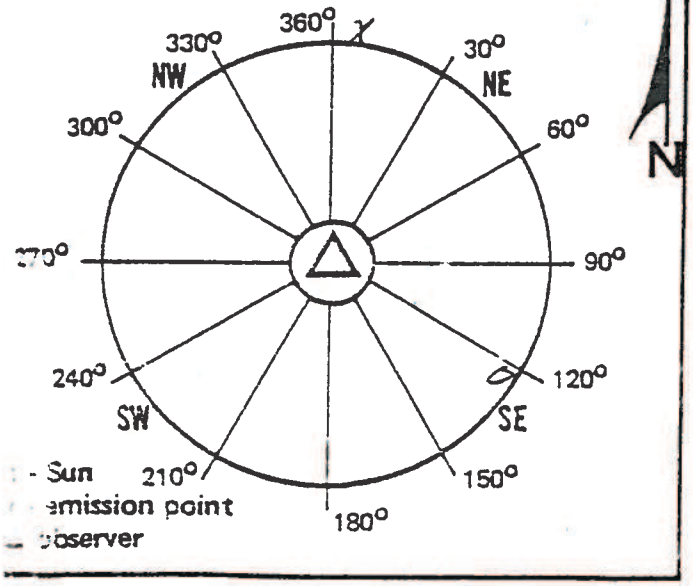

Remarks:

Received By:

Visible Emissions Evaluation Record

Plant Name: Hercules Inc.

Address: West 7th St.

City: H'burg Miss

Emission Point: 009

Date: 3-16-84

Is emission point operation normal ? _____

V. E. Observer: Bobbie Draughn

Certification Expiration: 4-27-84

Set No.	Time		Opacity	
	Start	End	Sum	Average
1	10^{50} Am	10^{56} Am	860	35.8
2	10^{56} Am	11^{02} Am	765	31.9
3	11^{02} Am	11^{08} Am	775	32.3

Overall Average: 33.3

	Initial	Final
Distance to discharge	2 Lengths	
Direction to discharge	NNE	
Height of observation point	Ground	
Height of discharge	200 ft	
Plume color	Gray	
Plume background	Gray Sky	
Water vapor in plume ?		
Wind direction (from)	S	
Wind speed	5-10 mph	
Ambient temperature	74°	
Discharge temperature		
Sky conditions	PC	

	Seconds			
Min.	0	15	30	45
0	5	70	70	80
1	100	80	80	80
2	70	70	10	10
3	30	15	15	10
4	10	10	10	5
5	5	5	10	10
0	10	10	10	20
1	15	15	15	15
2	50	50	50	15
3	10	90	40	80
4	50	20	20	20
5	30	40	40	50
0	60	40	60	70
1	70	60	60	30
2	20	20	25	25
3	20	25	25	25
4	15	15	20	15
5	15	20	20	20

Diagram Of Observation/Discharge Point

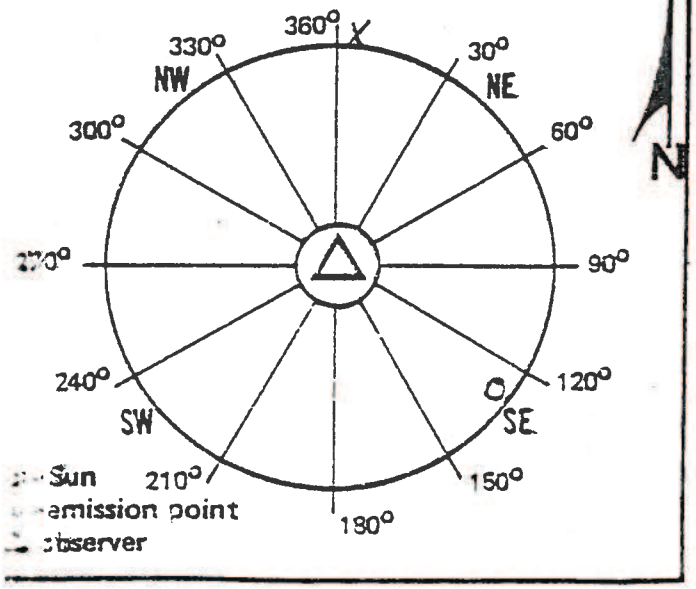

Remarks: _____

Received By: _____

Visible Emissions Evaluation Record

t Name: Hercules Inc
ress: W 7th Street
: Hattiesburg, Miss
ssion Point: 010
: 3-20-84
nission point operation normal ? _____

	Initial	Final
ance to discharge	2	Lengths
ction to discharge	N.E.	
ht of observation point	Ground	
ht of discharge	225 ft	
ne color	Grey	
ne background	Grey	
r vapor in plume ?		
l direction (from)	N.E	
l speed	10 MPH	
ient temperature	47°	
harge temperature		
conditions	Cloudy	

V. E. Observer: Howell Lusa
Certification Expiration: 4-27-84

Set No.	Time Start	Time End	Opacity Sum	Opacity Average
1	12 15 PM	12 21 PM	780	32.5
2	12 21 PM	12 26 PM	780	32.5
3	12 26 PM	12 33 PM	560	23.3

Overall Average: _____

Min.	Seconds 0	15	30	45
0	25	25	25	25
1	25	25	25	25
2	30	30	30	30
3	35	35	35	35
4	40	40	40	40
5	40	40	40	40
0	50	50	50	50
1	40	40	40	40
2	35	35	35	35
3	25	25	25	25
4	20	20	20	20
5	25	25	25	25
0	25	25	25	25
1	25	25	25	25
2	25	25	25	25
3	20	20	20	20
4	20	20	20	20
5	25	25	25	25

Remarks: _____

gram Of Observation/Discharge Point

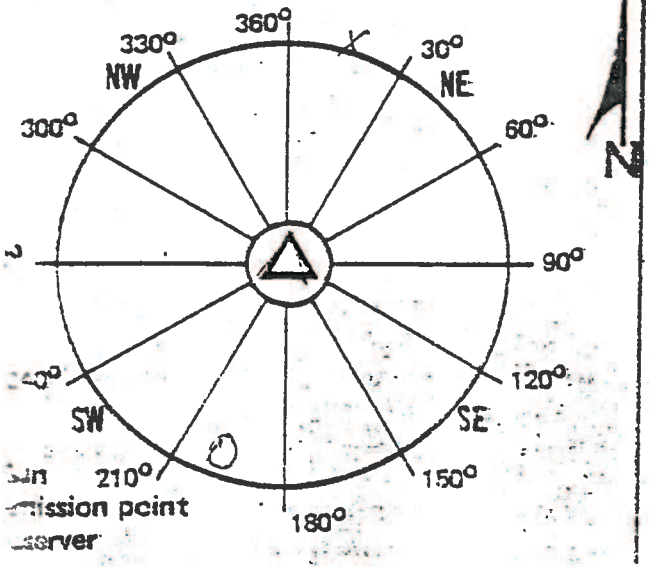

ission point
server

Visible Emissions Evaluation Record

ıt Name: Hercules Inc.

dress: West 7th St.

r: H'burg Mich

ission Point: 009

e: 3-22-84

mission point operation normal ? _____

	Initial	Final
ance to discharge	2 Lengths	
ection to discharge	NNE	
ght of observation point	Ground	
ght of discharge	200 ft	
ne color	Gray + white	
ne background	Blue Sky	
er vapor in plume ?		
d direction (from)	NW	
d speed	5-10 mph	
bient temperature	63°	
charge temperature		
conditions	Clear	

agram Of Observation/Discharge Point

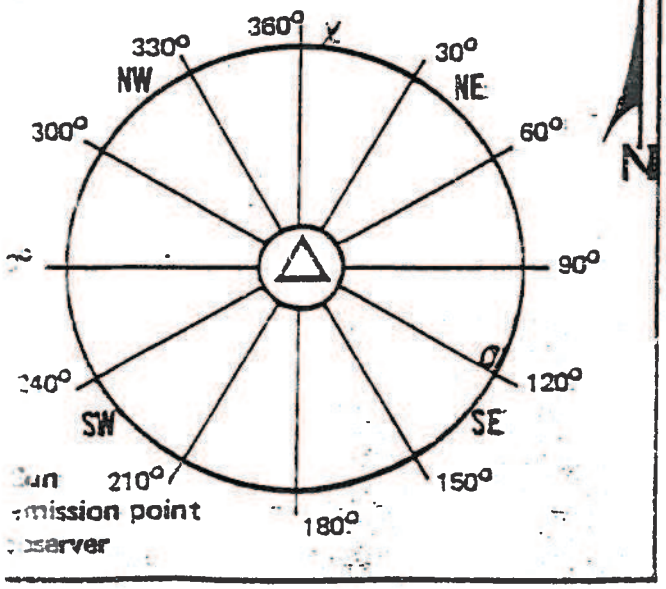

V. E. Observer: Bobbie Draughn

Certification Expiration: 4-27-84

Set No.	Time Start	Time End	Opacity Sum	Opacity Average
1	8 40 Am	8 46 Am	935	39.0
2	8 46 Am	8 52 Am	970	40.4
3	8 52 Am	8 58 Am	940	39.2

Overall Average: 39.5

Min.	Seconds 0	15	30	45
0	25	30	30	40
1	40	30	40	40
2	40	40	40	40
3	40	40	40	40
4	40	40	40	50
5	50	40	40	40
0	40	40	40	40
1	40	40	40	40
2	40	40	40	40
3	40	40	40	50
4	40	40	40	40
5	40	40	40	40
0	40	40	30	30
1	40	40	40	40
2	40	40	40	40
3	40	40	40	40
4	40	40	40	40
5	40	40	40	40

Remarks: Cleaning #2 Boiler
start 8:01
stop 8:00

Received By: _____

Visible Emissions Evaluation Record

lant Name: Hercules Inc

ddress: West 7th St.

ity: Hilburg Miss

mission Point: 009

ate: 3-26-84

emission point operation normal ? _____

	Initial	Final
istance to discharge	2 Lengths	
irection to discharge	NNE	
eight of observation point	Ground	
eight of discharge	200 ft	
lume color	Gray	
lume background	Gray Sky	
ater vapor in plume ?		
ind direction (from)	SE	
ind speed	5-10 mph	
mbient temperature	69°	
ischarge temperature		
ky conditions	Cloudy	

Diagram Of Observation/Discharge Point

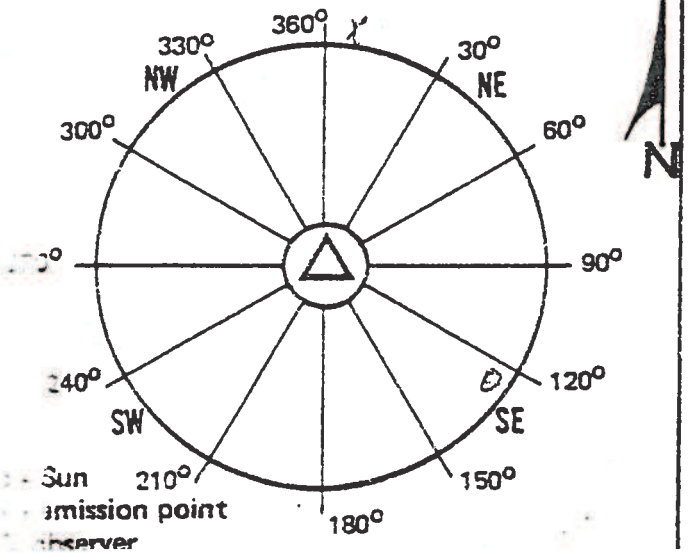

V. E. Observer: Eddie Douglas

Certification Expiration: 4-27-84

Set No.	Time		Opacity	
	Start	End	Sum	Average
1	10^35 Am	10^41 Am	785	32.7
2	10^41	10^47	760	31.7
3	10^47 Am	10^53 Am	370	15.4

Overall Average: 26.6

Min.	Seconds 0	15	30	45
0	25	25	25	40
1	40	40	30	30
2	35	35	35	40
3	40	40	40	40
4	40	30	30	30
5	25	25	25	20
0	30	40	30	30
1	30	30	30	30
2	30	30	30	30
3	30	30	35	30
4	30	40	30	30
5	30	20	20	15
0	15	15	15	15
1	15	15	20	20
2	15	15	15	15
3	15	15	15	15
4	15	15	15	15
5	15	15	15	15

Remarks: Cleaning # 2 Boiler

START 10:45

STOP 12:15

Visible Emissions Evaluation Record

Plant Name: Hercules Inc

Address: West 7th St

City: Hburg Miss.

Emission Point: 009

Date: 3-27-84

Is emission point operation normal ? _____

V. E. Observer: Bobbie Draughon

Certification Expiration: 4-27-84

Set No.	Time		Opacity	
	Start	End	Sum	Average
1	11 50 Am	11 56 Am	740	30.8
2	11 56 Am	12 02 Pm	845	35.2
3	12 02 Pm	12 08 Pm	1580	65.8

Overall Average: 43.9

	Initial	Final
Distance to discharge	2 Lengths	
Direction to discharge	NNE	
Height of observation point	Ground	
Height of discharge	200 ft	
Plume color	Gray	
Plume background	Gray Sky	
Water vapor in plume ?		
Wind direction (from)	East	
Wind speed	5-10 mph	
Ambient temperature	66°	
Discharge temperature		
Sky conditions	Cloudy	

Min.	Seconds 0	15	30	45
0	20	20	20	20
1	20	30	30	30
2	30	30	30	30
3	30	30	30	30
4	30	30	40	50
5	50	40	40	30
0	30	30	30	30
1	30	30	30	30
2	30	30	30	30
3	30	30	30	30
4	35	40	40	40
5	40	50	60	60
0	60	60	60	60
1	60	60	70	70
2	70	70	70	60
3	70	70	70	70
4	70	70	70	70
5	60	60	60	70

Diagram Of Observation/Discharge Point

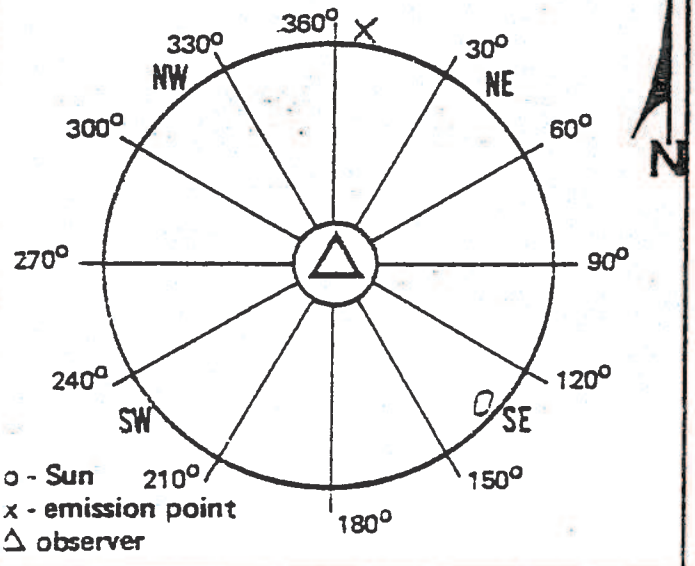

Remarks: Cleaning # 2 Boiler
Start 11:30
Stop 1:00

Received By: _____

Visible Emissions Evaluation Record

Plant Name: Hercules Inc.

Address: West 7th St.

City: Hattiesburg Miss

Emission Point: 009

Date: 3-29-84

Is emission point operation normal? _____

V. E. Observer: Bobbie Draughon

Certification Expiration: 4-27-84

Set No.	Time		Opacity	
	Start	End	Sum	Average
1	10 50 Am	10 55 Am	1100	45.8
2	10 56 Am	11 02 Am	795	33.1
3	11 02 Am	11 05 Am	725	30.2

Overall Average: 36.4

	Initial	Final
Distance to discharge:	2 Lengths	
Direction to discharge:	NNE	
Height of observation point:	Ground	
Height of discharge:	200 ft	
Plume color:	Gray & white	
Plume background:	Blue Sky	
Water vapor in plume?		
Wind direction (from):	NW	
Wind speed:	10-20 mph	
Ambient temperature:	56°	
Discharge temperature:		
Sky conditions:	PC	

Min:	Seconds: 0	15	30	45
0	40	40	40	40
1	50	50	50	50
2	50	50	50	50
3	50	50	50	50
4	40	40	40	40
5	40	40	40	40
0	50	50	40	40
1	40	40	40	40
2	40	40	40	40
3	30	30	30	30
4	25	20	15	15
5	15	25	30	30
0	30	30	30	30
1	30	30	30	30
2	30	30	30	30
3	30	30	30	30
4	25	25	25	35
5	35	35	30	35

Diagram Of Observation/Discharge Point:

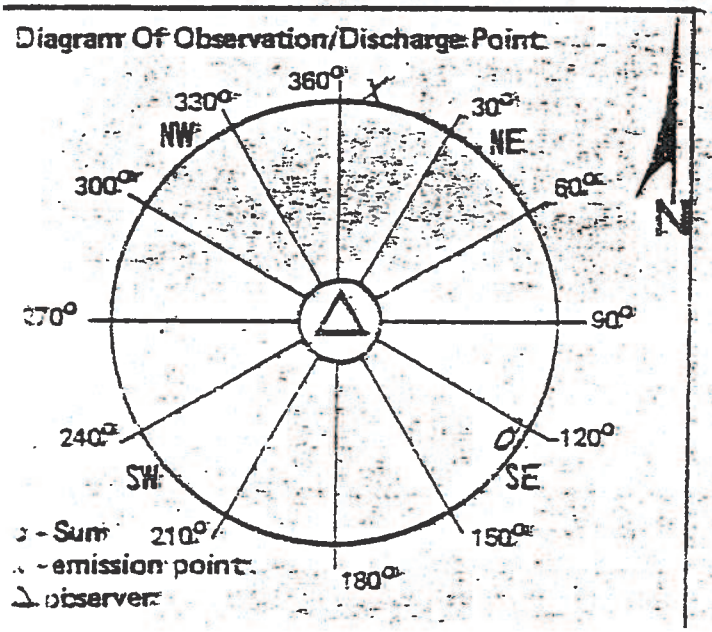

Remarks: Cleaning fires # 2 Boiler

START 10:40

STOP 11:45

Visible Emissions Evaluation Record

ant Name: Hercules Inc.

ddress: West 7th St

ty: H'burg Miss

mission Point: 010

ate: 3-30-84

emission point operation normal ? _____

V. E. Observer: Bobbie Draughn

Certification Expiration: 4-27-84

Set No.	Time		Opacity	
	Start	End	Sum	Average
1	12°° N	12°⁶ pm	290	12.1
2	12°⁶ pm	12¹² pm	1450	60.4
3	12¹² pm	12¹⁸ pm	900	37.5

Overall Average: 36.7

	Initial	Final
istance to discharge	2 Lengths	
irection to discharge	NNE	
eight of observation point	Ground	
eight of discharge	225 ft	
ume color	Gray + white	
ume background	Blue Sky	
ater vapor in plume ?		
ind direction (from)	NW	
ind speed	5-10 mph	
nbient temperature	65°	
scharge temperature		
y conditions	Clear	

Min.	Seconds 0	15	30	45
0	5	5	10	10
1	5	10	5	5
2	5	5	10	10
3	15	15	15	20
4	15	10	10	15
5	15	15	30	30
0	20	25	25	25
1	20	20	25	40
2	60	70	70	70
3	70	70	70	70
4	80	90	100	90
5	90	90	80	80
0	80	90	90	90
1	90	90	100	70
2	20	10	10	10
3	10	10	10	10
4	15	15	15	15
5	15	10	10	15

Diagram Of Observation/Discharge Point

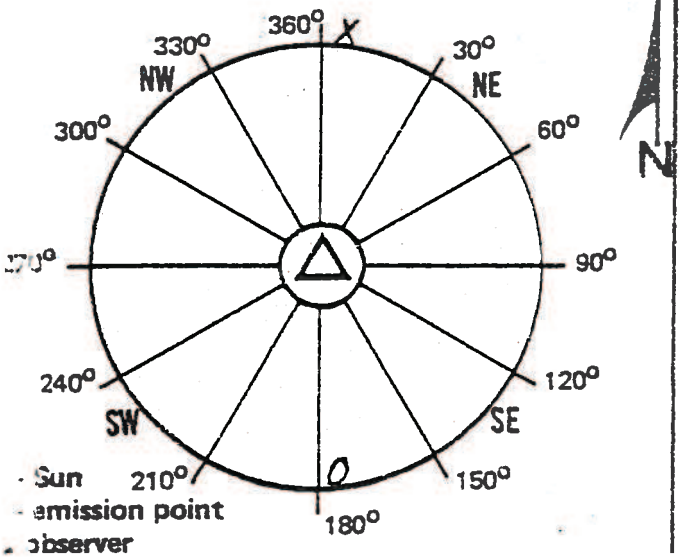

Remarks: _____

Hercules Incorporated
West 7th Street
P.O. Box 1937
Hattiesburg, MS 39401
(601) 545-3450

March 12, 1984

RECEIVED
MAR 15 REC'D
DEPT. OF NATURAL RESOURCE
BUREAU OF POLLUTION CONTROL

Mr. Dwight K. Wylie, P.E. Chief
Air Division
Bureau of Pollution Control
P. O. Box 10385
Jackson, Mississippi 39209

Dear Mr. Wylie:

In reference to operating Permit No. 0800-0001, please find the attached monthly report detailing the compliance status of the boilers for emission points 009 and 010.

We will continue to submit this report on a monthly basis.

Very truly yours,

Charles Jordan
Environmental Supervisor

CSJ:ml

Attachments

HERCULES

Interoffice Memo

Hattiesburg, Mississippi
March 9, 1984

To: C. S. Jordan

From: L. C. Polk

OPERATING PERMIT NO. 0800-00001 HATTIESBURG, MISSISSIPPI
ISSUED FOR THE OPERATION OF AIR EMISSIONS EQUIPMENT

In reference to the above permit, Part III, other requirements, 1-C, the following monthly report is for February 1984.

The report details the compliance status of the boilers with copies of all visible emissions evaluations in which any reading exceeds 40% opacity.

Number of VEE copies attached = 18

L. C. Polk

LCP:sw

Attachments

S. Rock

Visible Emissions Evaluation Reco

int Name: Hercules Inc
ldress: W. 7th Street
y: H'burg Miss
ission Point: 010
te: 2-1-84
emission point operation normal ?

V. E. Observer: Bobbie Draughn
Certification Expiration: 4-27-84

Set No.	Time		Opacity	
	Start	End	Sum	Average
1	12 30 PM	12 36 PM	625	26.0
2	12 36 PM	12 42 PM	755	31.5
3	12 42 PM	12 48 PM	570	23.8

Overall Average: 27.1

	Initial	Final
stance to discharge	2 Lengths	
rection to discharge	NE	
eight of observation point	Ground	
eight of discharge	225 ft	
ume color	Gray	
ume background	White	
ater vapor in plume ?		
ind direction (from)	SW	
ind speed	5 mph	
mbient temperature	54°	
ischarge temperature		
ky conditions	PC	

Min.	Seconds 0	15	30	45
0	20	20	20	20
1	25	25	30	30
2	30	30	25	25
3	25	30	30	30
4	25	25	25	25
5	25	25	30	30
0	25	25	25	25
1	25	25	25	25
2	25	25	60	50
3	50	35	45	40
4	35	30	30	30
5	25	25	25	25
0	40	30	30	25
1	20	20	25	25
2	25	25	20	20
3	20	20	20	20
4	20	20	25	25
5	25	25	25	20

Diagram Of Observation/Discharge Point

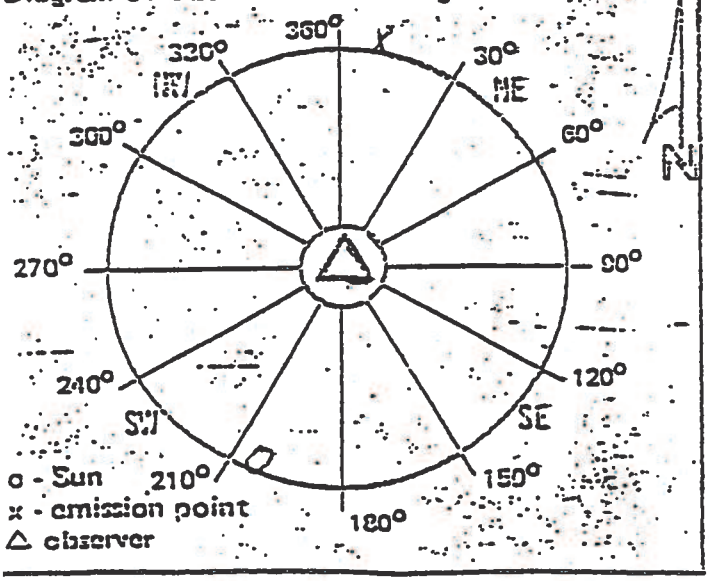

Remarks:

Received By:

Visible Emissions Evaluation Recor

Plant Name: Hercules Inc.

Address: W. 7th Street

City: Hazleton Miss

Emission Point: 009

Date: 2-1-84

Is emission point operation normal ? _____

V. E. Observer: Bobbie Draughn

Certification Expiration: 4-27-84

Set No.	Time		Opacity	
	Start	End	Sum	Average
1	12 30 PM	12 36 PM	605	25.2
2	12 36 PM	12 42 PM	750	31.3
3	12 42 PM	12 48 PM	1835	76.5

Overall Average: 44.3

	Initial	Final
Distance to discharge	2 Lengths	
Direction to discharge	NE	
Height of observation point	Ground	
Height of discharge	200 ft	
Plume color	Gray + white	
Plume background	White	
Water vapor in plume ?		
Wind direction (from)	SW	
Wind speed	5 mph	
Ambient temperature	59°	
Discharge temperature		
Sky conditions	Cl	

Min.	Seconds 0	15	30	45
0	20	20	20	20
1	25	25	30	30
2	30	30	35	35
3	30	30	30	30
4	25	25	25	25
5	20	20	15	10
0	10	15	15	20
1	20	30	30	30
2	25	25	30	30
3	50	45	50	40
4	25	25	25	25
5	20	20	75	70
0	45	75	65	75
1	75	75	95	80
2	75	75	80	80
3	75	75	75	75
4	75	75	85	90
5	85	80	80	80

Diagram Of Observation/Discharge Point

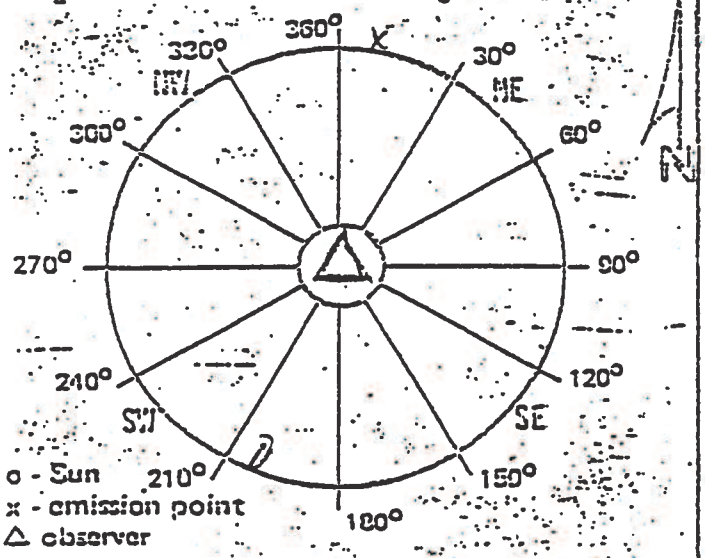

Remarks: _____

Received By: _____

Visible Emissions Evaluation Reco...

lant Name: Hercules Inc.

V. E. Observer: Bobbie Draughn

ddress: W. 7th Street

Certification Expiration: 4-27-84

ity: H'burg Miss

mission Point: 009

Date: 2-2-84

s emission point operation normal?

Set No.	Time Start	Time End	Opacity Sum	Opacity Average
1	10 30 Am	10 36 Am	200	8.3
2	10 36 Am	10 42 Am	155	6.5
3	10 42 Am	10 48 Am	325	13.5

Overall Average: 9.4

	Initial	Final
Distance to discharge	2 Lengths	
Direction to discharge	NE	
Height of observation point	Ground	
Height of discharge	200 ft	
Plume color	Gray	
Plume background	Blue	
Water vapor in plume?		
Wind direction (from)	SE	
Wind speed	5 mph	
Ambient temperature	55°	
Discharge temperature		
Sky conditions	Fair	

Min	Seconds 0	15	30	45
0	10	15	15	15
1	10	10	5	5
2	5	10	10	10
3	10	10	10	5
4	5	5	5	5
5	10	5	5	5
0	5	10	10	5
1	5	5	5	5
2	5	5	5	5
3	5	5	10	10
4	5	5	5	5
5	5	10	10	10
0	5	5	5	5
1	5	5	5	5
2	5	5	5	10
3	10	5	5	35
4	90	70	15	10
5	5	5	5	5

Diagram Of Observation/Discharge Point

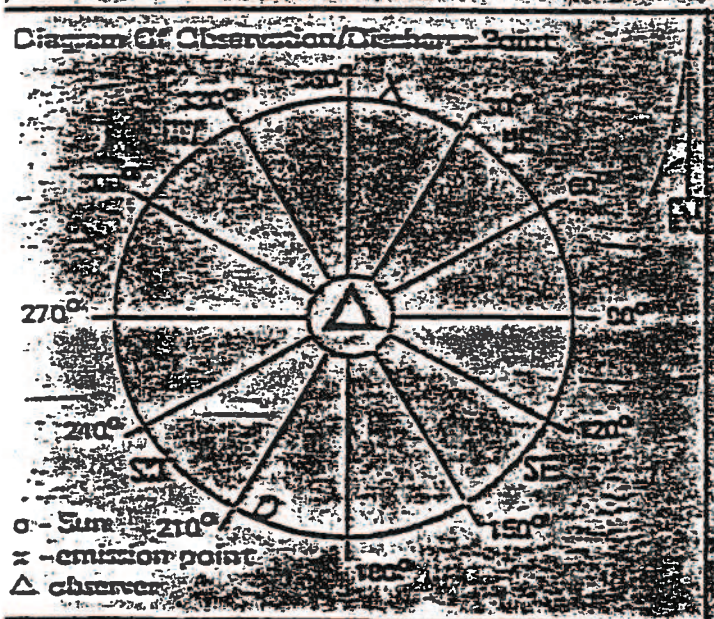

Received By:

Visible Emissions Evaluation Record

Plant Name: Hercules Inc.
Address: W. 7th Street
City: H'burg Miss.
Emission Point: 010
Date: 2-2-84
Emission point operation normal?

V. E. Observer: Bobbie Draughn
Certification Expiration: 4-27-84

Set No.	Time Start	Time End	Opacity Sum	Opacity Average
1	10:30 Am	10:36 Am	765	31.9
2	10:36 Am	10:42 Am	560	23.3
3	10:42 Am	10:48 Am	955	39.8

Overall Average: 31.7

	Initial	Final
Distance to discharge	2 Lengths	
Direction to discharge	NE	
Height of observation point	Ground	
Height of discharge	165 ft.	
Plume color	Gray	
Plume background	Blue	
Observation plane		
Wind direction (from)	SE	
Wind speed	5-10 M	
Ambient temperature	53°	
Discharge temperature		
Sky conditions	Fair	

Min	0	15	30	45
1	25	35	35	35
2	30	40	40	40
3	40	40	40	40
4	45	40	35	30
5	30	30	20	20
6	10	10	10	10
7	35	30	30	40
8	30	30	25	35
9	20	10	10	10
10	10	20	20	20
11	15	20	20	20
12	10	20	20	20
13	25	30	30	30
14	30	30	30	30
15	30	20	20	20
16	25	45	60	50
17	30	35	35	35
18	35	40	30	30

Diagram of Observation/Discharge Point

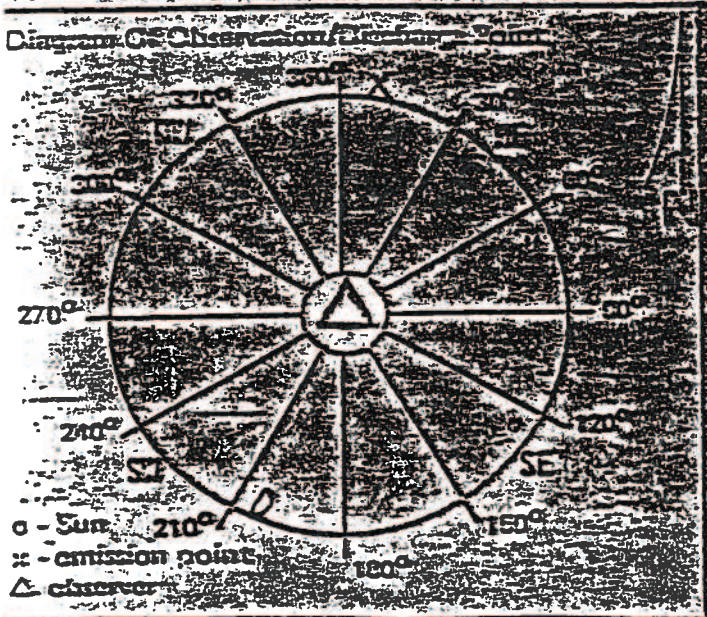

Received By:

J. Rock

Visible Emissions Evaluation Reco...

ant Name: Hercules Inc

ddress: W 7th Street

ty: H'burg Miss

nission Point: 010

ate: 2-3-84

emission point operation normal ?

	Initial	Final
istance to discharge	2 Sengths	
irection to discharge	NNE	
eight of observation point	Ground	
eight of discharge	225 ft	
lume color	Gray	
lume background	Gray	
/ater vapor in plume ?		
/ind direction (from)	SW	
/ind speed	5 mph	
mbient temperature	55°	
ischarge temperature		
ky conditions	Cloudy	

Diagram Of Observation/Discharge Point

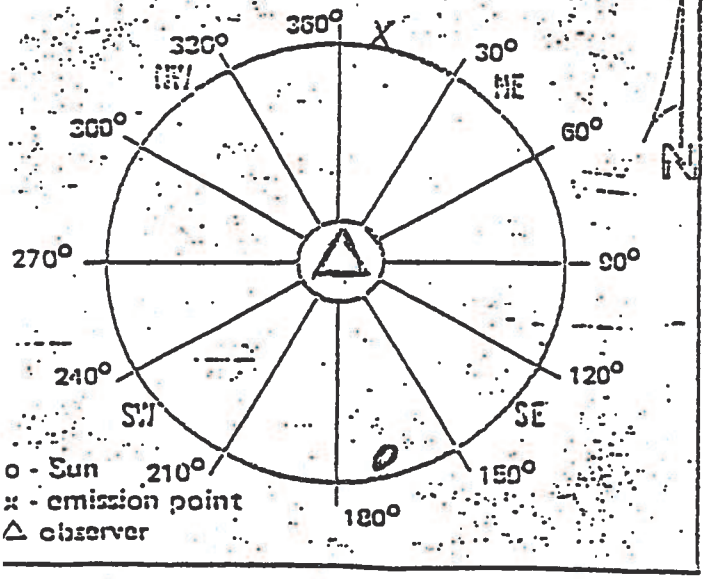

V. E. Observer: Bobbie Draughon

Certification Expiration: 4-27-84

Set No.	Time Start	Time End	Opacity Sum	Opacity Average
1	9:45 Am	9:51 Am	1315	54.8
2	9:51 Am	9:57 Am	930	38.8
3	9:57 Am	10:03 Am	845	35.2

Overall Average: 42.9

Min.	Seconds 0	15	30	45
0	40	40	40	60
1	50	50	40	50
2	50	50	60	60
3	60	60	60	50
4	50	50	70	75
5	70	60	60	60
0	40	35	40	40
1	40	30	30	40
2	35	35	40	40
3	35	30	45	40
4	40	40	45	45
5	40	35	45	45
0	35	35	30	35
1	30	30	30	30
2	25	30	30	30
3	35	35	35	35
4	40	40	40	40
5	40	35	45	55

Remarks: Cleaning H & Boiler
Started 8:00 Am
Stopped 9:23 m

Received By:

Visible Emissions Evaluation Recor

int Name: Hercules Inc.

ldress: W. 7th Street

y: Hibbing Minn

ission Point: 010

ite: 2-6-84

emission point operation normal ? _____

	Initial	Final
stance to discharge	2 Lengths	
rection to discharge	ENE	
eight of observation point	Ground	
eight of discharge	225 ft.	
ume color	White + Grey	
ume background	Blue	
ater vapor in plume ?		
ind direction (from)	N	
ind speed	5-10 mph	
mbient temperature	35°	
ischarge temperature		
ky conditions	Fair	

V. E. Observer: Bobbie Donaghue

Certification Expiration: 4-27-84

Set No.	Time Start	Time End	Opacity Sum	Opacity Average
1	11 55 Am	12 25 pm	665	27.7
2	12 Min	12 40 pm	455	19.0
3	12 40 pm	12 57 pm	515	21.5

Overall Average: 22.7

Min.	Seconds 0	15	30	45
0	60	60	40	40
1	30	30	25	25
2	25	25	25	25
3	25	25	20	20
4	20	20	20	20
5	25	25	20	15
0	20	20	20	20
1	25	25	25	25
2	25	20	20	20
3	20	15	15	15
4	15	15	15	10
5	15	15	20	20
0	15	15	20	20
1	25	20	15	20
2	20	25	25	30
3	25	25	25	25
4	25	20	20	20
5	20	20	20	20

Diagram Of Observation/Discharge Point

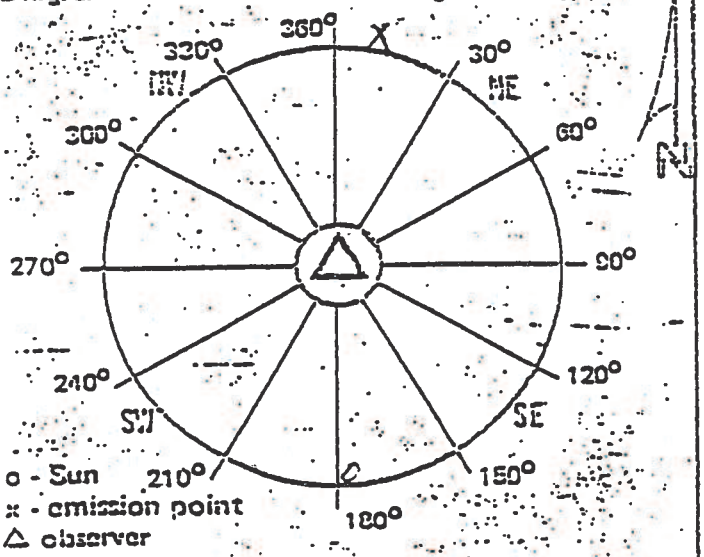

Remarks: Cleaning #4 Boiler

Start 10:30

Started 12:30

Received By: _____

8 Polk

Visible Emissions Evaluation Reco

Plant Name: Hercules Inc.

Address: W. 7th Street

City: Hattiesburg Miss.

Emission Point: 010

Date: 3-7-84

Is emission point operation normal?

	Initial	Final
Distance to discharge	2 Lengths	
Direction to discharge	NNE	
Height of observation point	Ground	
Height of discharge	225 ft	
Plume color	Gray	
Plume background	Blue	
Water vapor in plume?		
Wind direction (from)	East	
Wind speed	5-10 mph	
Ambient temperature	44°	
Discharge temperature		
Sky conditions	Fair	

V. E. Observer: Bobbie Draughn

Certification Expiration: 4-27-84

Set No.	Time Start	Time End	Opacity Sum	Opacity Average
1	10 50 Am	10 56 Am	755	31.5
2	10 56 Am	11 02 Am	855	35.6
3	11 02 Am	11 08	650	27.1

Overall Average: 31.4

Min.	Seconds 0	15	30	45
0	25	30	30	30
1	35	35	30	25
2	30	30	30	40
3	40	40	40	40
4	40	30	30	30
5	30	25	20	20
6	30	25	25	25
7	25	100	100	100
8	100	90	25	20
9	20	15	15	15
10	15	15	15	15
11	15	15	20	25
12	20	35	40	50
13	40	30	90	30
14	25	20	15	20
15	15	10	15	15
16	15	20	20	20
17	70	25	10	10

Diagram Of Observation/Discharge Point

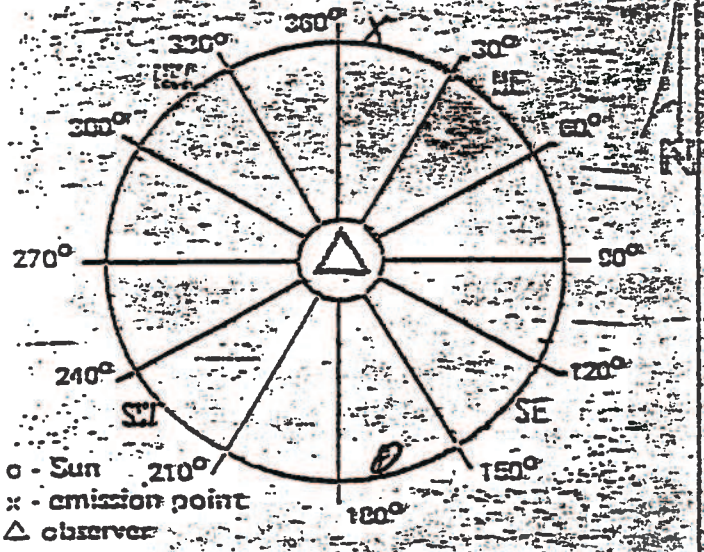

Remarks: Cleaning # 4 Boiler

Started 10:30

Finished 12:45

Received By:

S. Polk

Visible Emissions Evaluation Reco

Plant Name: Hercules Inc

Address: W. 7th Street

City: H'burg Miss

Emission Point: 010

Date: 2-8-84

Is emission point operation normal ?

	Initial	Final
Distance to discharge	2 Lengths	
Direction to discharge	NNE	
Height of observation point	Ground	
Height of discharge	225 ft	
Plume color	Gray	
Plume background	Blue	
Water vapor in plume ?		
Wind direction (from)	East	
Wind speed	5-10 mph	
Ambient temperature	49°	
Discharge temperature		
Sky conditions	Clear	

Diagram Of Observation/Discharge Point

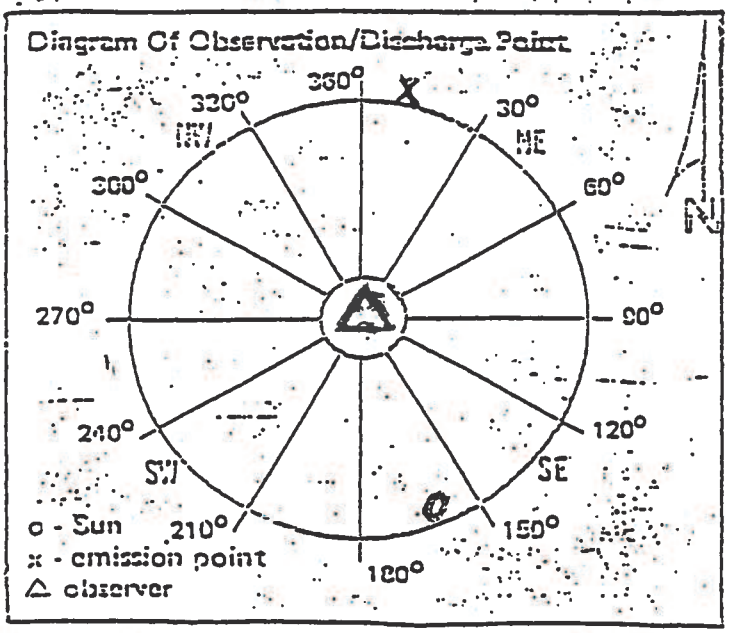

V. E. Observer: Bobbie Draughn

Certification Expiration: 4-27-84

Set No.	Time Start	Time End	Opacity Sum	Opacity Average
1	10 40 Am	10 46 Am	610	25.4
2	10 46 Am	10 52 Am	730	30.4
3	10 52 Am	10 58 Am	735	30.6

Overall Average: 28.8

Min.	Seconds 0	15	30	45
0	25	25	25	25
1	20	25	25	25
2	35	35	35	35
3	20	20	20	20
4	30	25	25	25
5	25	25	20	20
0	20	20	20	20
1	25	25	25	25
2	25	30	25	25
3	25	20	25	35
4	35	40	40	30
5	35	40	50	70
0	25	25	25	25
1	35	35	30	30
2	30	25	25	25
3	20	20	20	45
4	25	40	50	50
5	40	30	30	30

Remarks:

Cleaning & & Boiler

Started 10:30

Stopped 12:45

Received By:

S. Plant

Visible Emissions Evaluation Record

Plant Name: Hercules Inc.

Address: W. 7th Street

City: Hazlehurst Miss

Emission Point: 010

Date: 2-9-94

Is emission point operation normal ? _____

V. E. Observer: Bobbie Douglas

Certification Expiration: 4-27-94

Set No.	Time Start	Time End	Opacity Sum	Opacity Average
1	10:10 AM	10:15 AM	1020	42.5
2	10:16 AM	10:22 AM	1815	75.6
3	10:22 AM	10:28 AM	2015	84.0

Overall Average: 67.4

	Initial	Final
Distance to discharge	2 Longths	
Direction to discharge	NE	
Height of observation point	Ground	
Height of discharge	225 ft	
Plume color	Gray white	
Plume background	Blue	
Water vapor in plume ?		
Wind direction (from)	East	
Wind speed	5-10 mph	
Ambient temperature	49°	
Discharge temperature		
Sky conditions	PC	

Min.	Seconds 0	15	30	45
0	20	20	20	20
1	25	25	20	20
2	25	30	30	30
3	30	30	40	50
4	70	75	90	90
5	90	70	60	70
0	90	90	90	90
1	90	70	70	90
2	90	90	90	90
3	90	90	65	60
4	70	75	80	75
5	75	65	50	50
0	40	60	60	50
1	50	75	90	70
2	90	90	90	90
3	100	100	100	100
4	90	100	90	100
5	100	90	95	95

Diagram Of Observation/Discharge Point

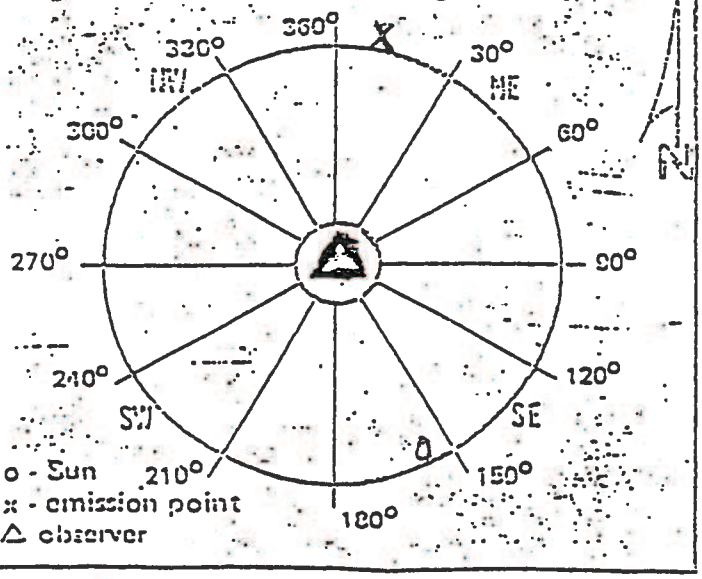

Remarks:

Cleaning # 4 Boiler

Started 10:30 AM

Stopped 11:30 AM

Received By: _____

Visible Emissions Evaluation Record

Plant Name: Hercules Inc

Address: West 7th St

City: Hastings Mich

Emission Point: 009

Date: 2-14-84

Is emission point operation normal ? _____

V. E. Observer: Esther Donaghue

Certification Expiration: 4-27-84

Set No.	Time Start	Time End	Opacity Sum	Opacity Average
1	12 24 PM	12 27 PM	955	39.8
2	12 27 PM	12 33 PM	1390	57.9
3	12 33 PM	12 30 PM	1265	52.7

Overall Average: 50.1

	Initial	Final
Distance to discharge	2 Lengths	
Direction to discharge	East	
Height of observation point	Ground	
Height of discharge	250 Feet	
Plume color	Brown	
Plume background	Blue	Sky
Water vapor in plume ?		
Wind direction (from)	W	
Wind speed	5 mph	
Ambient temperature	65	
Discharge temperature		
Sky conditions	Clear	

Min.	Seconds 0	15	30	45
0	25	25	50	50
1	60	60	50	30
2	20	60	30	20
3	25	25	30	30
4	20	20	55	60
5	90	80	30	20
0	60	65	70	40
1	40	40	40	40
2	60	90	75	30
3	50	75	75	60
4	30	70	30	40
5	50	40	80	80
0	30	40	50	50
1	50	80	70	70
2	90	70	20	15
3	15	70	80	40
4	60	80	70	80
5	40	20	20	15

Diagram Of Observation/Discharge Point

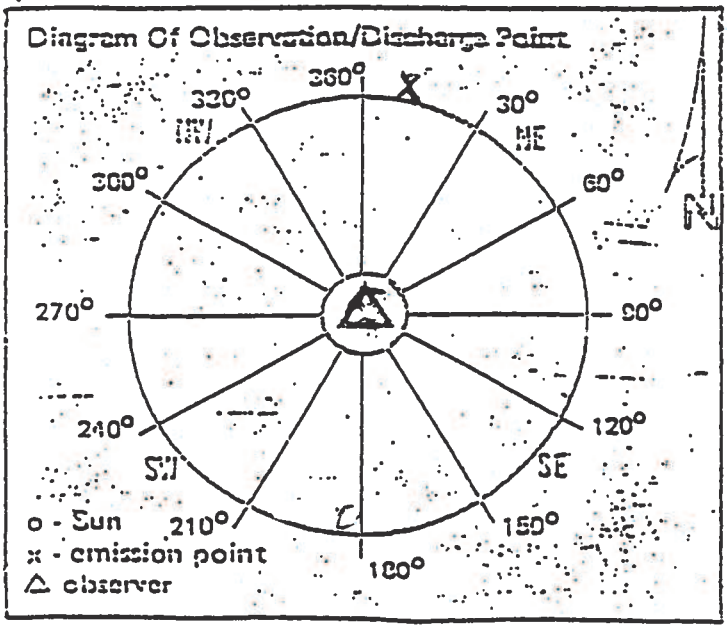

Remarks: _____

Received By: _____

Larry Folk

Visible Emissions Evaluation Record

Plant Name: Hercules Inc.

Address: W. 7th Street

City: H'burg Miss

Emission Point: 010

Date: 2-17-84

Is emission point operation normal ?

V. E. Observer: Bobbie Draughon

Certification Expiration: 4-27-84

Set No.	Time		Opacity	
	Start	End	Sum	Average
1	11 00 AM	11 AM	560	23.3
2	11 06 AM	11 12 AM	930	38.8
3	11 12 AM	11 18 AM	930	40.8

Overall Average: 34.3

	Initial	Final
Distance to discharge	2 Lengths	
Direction to discharge	NNE	
Height of observation point	Ground	
Height of discharge	225 ft.	
Plume color	Gray	
Plume background	Blue Sky	
Water vapor in plume ?		
Wind direction (from)	NE	
Wind speed	5-10 mph	
Ambient temperature	65°	
Discharge temperature		
Sky conditions	Clear	

Min.	Seconds 0	15	30	45
0	15	15	20	20
1	20	20	20	20
2	20	25	25	25
3	25	25	25	25
4	25	25	25	25
5	25	30	30	30
0	30	30	30	30
1	30	30	30	30
2	30	30	30	30
3	40	30	30	50
4	50	40	40	50
5	70	50	40	50
0	30	30	40	40
1	75	70	50	60
2	50	50	40	50
3	40	40	30	30
4	25	30	30	30
5	30	30	40	40

Diagram Of Observation/Discharge Point

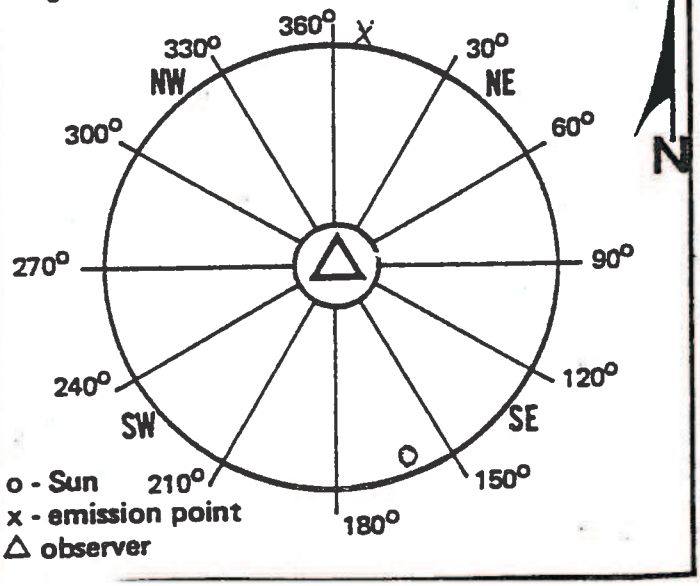

Remarks:

Received By:

PSER

Visible Emissions Evaluation Record

Plant Name: Hercules Inc

Address: W. 7th St.

City: H'burg Miss

Emission Point: 010

Date: 2-20-84

Is emission point operation normal ? _____

V. E. Observer: Bobbie Draughon

Certification Expiration: 4-27-84

Set No.	Time		Opacity	
	Start	End	Sum	Average
1	12'18 PM	12'36 PM	1135	47.3
2	12'36 PM	12'52 PM	1100	45.8
3	12'52 PM	12'28 PM	1330	55.4

Overall Average: 49.5

	Initial	Final
Distance to discharge	2 Lengths	
Direction to discharge	NNE	
Height of observation point	Ground	
Height of discharge	225 feet	
Plume color	Gray	
Plume background	Gray Sky	
Water vapor in plume ?		
Wind direction (from)	SW	
Wind speed	10-15 mph	
Ambient temperature	55°	
Discharge temperature		
Sky conditions	Cloudy	

Diagram Of Observation/Discharge Point

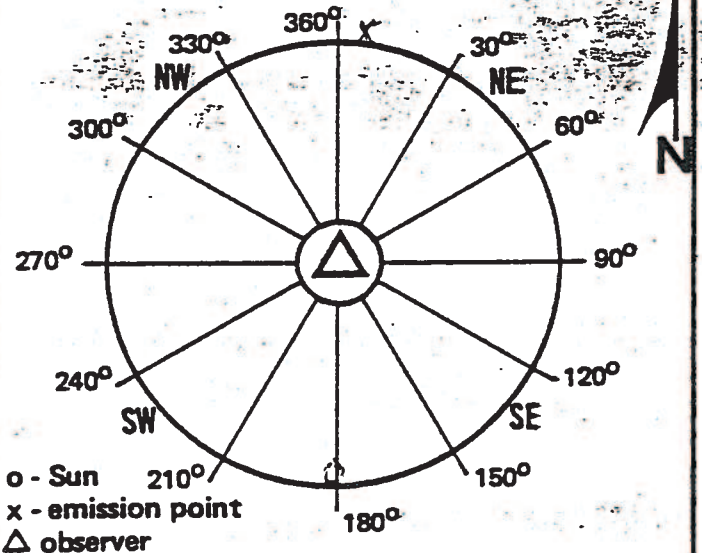

Min.	Seconds 0	15	30	45
0	20	20	20	30
1	25	25	25	25
2	30	35	40	50
3	60	70	70	70
4	60	60	60	60
5	70	60	75	75
0	70	70	70	60
1	60	50	40	40
2	30	30	30	30
3	30	30	30	30
4	50	50	60	50
5	50	50	40	50
0	50	50	50	50
1	50	60	50	50
2	50	50	50	50
3	60	60	60	60
4	60	60	60	60
5	60	60	60	60

Remarks:

Cleaning #3 Boiler

Started 11:10 AM

Stopped 2:15 PM

Received By: _____

Visible Emissions Evaluation Record

Plant Name: Hercules, Inc.

Address: W. Tex St.

City: H'burg Miss

Emission Point: 009

Date: 2-20-94

Is emission point operation normal ?

V. E. Observer: Bobbie Draughn

Certification Expiration: 4-27-94

Set No.	Time		Opacity	
	Start	End	Sum	Average
1	12 10 PM	12 16 PM	520	21.7
2	12 16 PM	12 22 PM	540	22.5
3	12 22 PM	12 28 PM	990	41.3

Overall Average: 28.5

	Initial	Final
Distance to discharge	2 Lengths	
Direction to discharge	NNE	
Height of observation point	Ground	
Height of discharge	200 ft.	
Plume color	Gray	
Plume background	Gray Sky	
Water vapor in plume ?		
Wind direction (from)	SW	
Wind speed	10-15 mph	
Ambient temperature	55°	
Discharge temperature		
Sky conditions	Cloudy	

Min.	Seconds 0	15	30	45
0	20	20	20	20
1	25	25	25	25
2	25	25	25	25
3	20	20	20	20
4	20	20	15	15
5	25	25	20	20
6	20	20	20	15
7	15	15	15	15
8	15	15	20	20
9	15	15	15	15
10	25	25	25	40
11	40	40	40	40
12	50	50	50	40
13	40	40	40	50
14	50	50	45	45
15	40	40	30	40
16	40	30	30	40
17	40	40	40	30

Diagram Of Observation/Discharge Point:

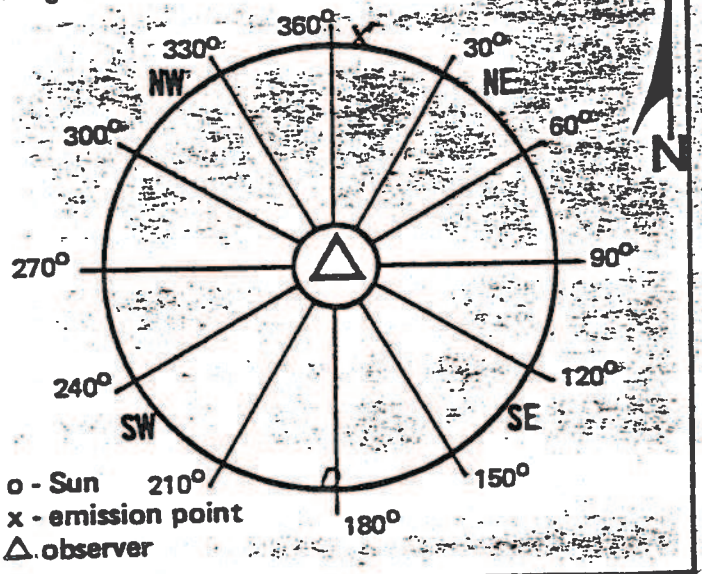

Remarks:

Received By:

Visible Emissions Evaluation Record

ant Name: Hercules Inc
ddress: W. 7th St.
ity: H'burg Miss
mission Point: 009
ate: 2-21-84
emission point operation normal ?

V. E. Observer: Robbie Draughn
Certification Expiration: 4-27-84

Set No.	Time Start	Time End	Opacity Sum	Opacity Average
1	11 05 Am	11 11 Am	340	14.2
2	11 11 Am	11 17 Am	1165	48.5
3	11 17 Am	11 23 Am	525	21.9

Overall Average: 28.2

	Initial	Final
istance to discharge	2 Lengths	
irection to discharge	NNE	
eight of observation point	Ground	
eight of discharge	200 ft	
ume color	Gray	
ume background	Blue Sky	
ater vapor in plume ?		
ind direction (from)	NE	
ind speed	10 mph	
mbient temperature	53°	
ischarge temperature		
ky conditions	PC	

Min:	Seconds 0	15	30	45
0	15	15	10	10
1	10	10	10	15
2	15	15	15	15
3	10	10	10	15
4	15	10	15	20
5	20	20	20	20
6	20	20	20	20
7	80	100	100	100
8	100	100	100	30
9	20	20	30	30
10	25	20	20	30
11	40	40	50	50
12	25	25	30	30
13	25	30	25	30
14	20	15	20	30
15	25	20	20	20
16	15	25	15	15
17	20	15	15	15

Diagram Of Observation/Discharge Point

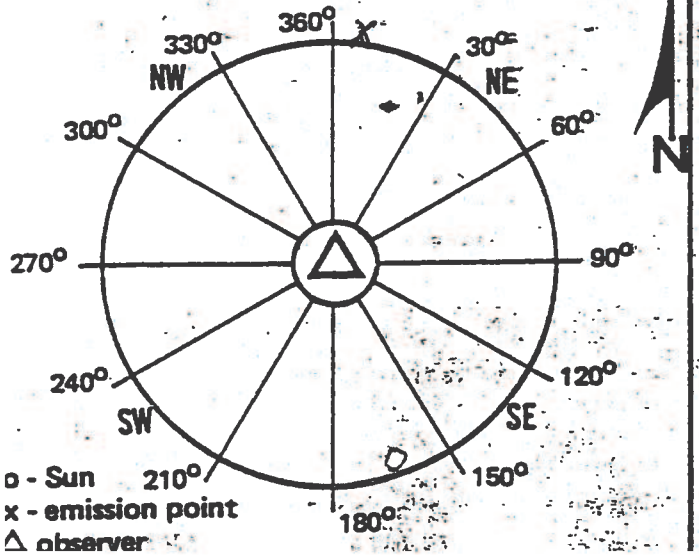

Remarks:

Visible Emissions Evaluation Record

Plant Name: Hercules Inc.

Address: W. 7th St.

City: H'burg Miss

Emission Point: 010

Date: 2-23-84

Is emission point operation normal? _____

V. E. Observer: Bobbie Draughon

Certification Expiration: 4-27-84

Set No.	Time Start	Time End	Opacity Sum	Opacity Average
1	12 10 PM	12 TO PM	395	16.0
2	12 16 PM	12 22 PM	560	23.3
3	12 22 PM	12 28 PM	475	19.8

Overall Average: 19.7

	Initial	Final
Distance to discharge	2 Lengths	
Direction to discharge	NNE	
Height of observation point	Ground	
Height of discharge	225 ft	
Plume color	Gray	
Plume background	Blue Sky	
Water vapor in plume?		
Wind direction (from)	W	
Wind speed	5-10 mph	
Ambient temperature	66°	
Discharge temperature		
Sky conditions	Clear	

Min.	Seconds 0	15	30	45
0	10	10	10	10
1	10	10	15	25
2	20	30	30	30
3	20	15	10	10
4	15	15	15	15
5	15	15	15	15
6	15	15	15	15
7	15	15	15	15
8	15	10	10	15
9	15	50	70	70
10	40	15	15	15
11	20	30	30	20
12	15	15	15	15
13	15	15	15	25
14	25	25	30	25
15	30	25	25	25
16	20	20	20	15
17	15	15	15	15

Diagram Of Observation/Discharge Point

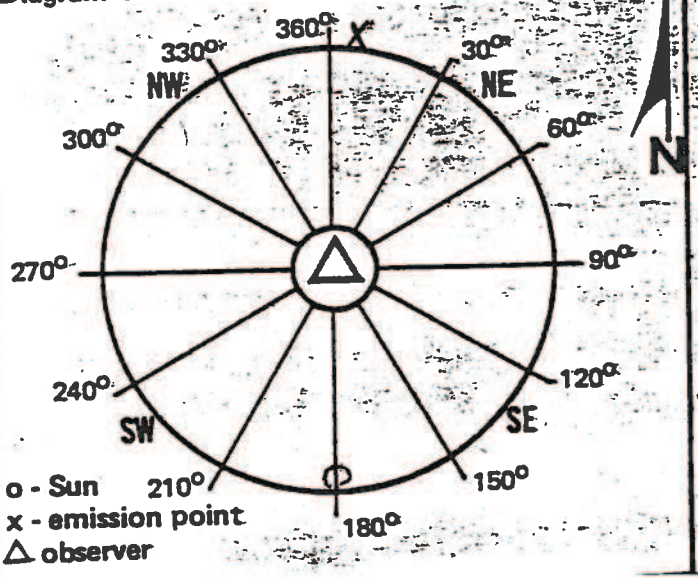

Remarks: _____

Received By: _____

J. K.

Visible Emissions Evaluation Record

Plant Name: Hercules, Inc.

Address: West 7th Street

City: H'burg Miss

Emission Point: 009

Date: 2-28-84

Is emission point operation normal ? _____

V. E. Observer: Bobbie Draughn

Certification Expiration: 4-27-84

Set No.	Time		Opacity	
	Start	End	Sum	Average
1	10 45 Am	10 51 Am	545	22.7
2	10 51 Am	10 57 Am	815	34.0
3	10 57 Am	11 03 Am	820	34.2

Overall Average: 30.3

	Initial	Final
Distance to discharge	2 Lengths	
Direction to discharge	NNE	
Height of observation point	Ground	
Height of discharge	200 ft	
Plume color	Gray	
Plume background	Gray Sky	
Water vapor in plume ?		
Wind direction (from)	NW	
Wind speed	20-25 mph	
Ambient temperature	39°	
Discharge temperature		
Sky conditions	Cloudy	

Diagram Of Observation/Discharge Point

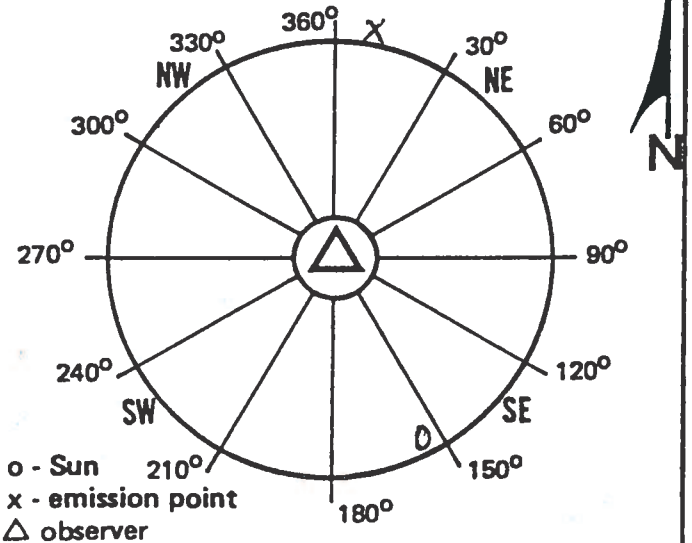

Min.	Seconds 0	15	30	45
0	20	20	20	20
1	20	20	25	20
2	25	25	25	25
3	25	25	25	25
4	25	25	25	20
5	20	20	25	20
0	25	25	25	25
1	25	40	40	30
2	25	25	25	25
3	30	30	30	30
4	30	35	35	40
5	40	50	60	70
0	75	80	75	75
1	70	50	40	20
2	20	20	15	20
3	20	20	20	20
4	15	20	20	25
5	25	25	25	25

Remarks: _____

Received By: _____

Visible Emissions Evaluation Record

Plant Name: Hercules Inc.

Address: West 7th St.

City: Hibing Miss

Emission Point: 010

Date: 2-28-84

Is emission point operation normal ? _____

V. E. Observer: Bobbie Draughon

Certification Expiration: 4-27-84

Set No.	Time Start	Time End	Opacity Sum	Opacity Average
1	10 45 Am	10 51 Am	585	24.4
2	10 51 Am	10 57 Am	695	29.0
3	10 57 Am	11 03 Am	885	36.9

Overall Average: 30.1

	Initial	Final
Distance to discharge	2 Lengths	
Direction to discharge	NNE	
Height of observation point	Ground	
Height of discharge	225 ft.	
Plume color	Gray	
Plume background	Gray Sky	
Water vapor in plume ?		
Wind direction (from)	NW	
Wind speed	20-25 mph	
Ambient temperature	39°	
Discharge temperature		
Sky conditions	Cloudy	

Min.	Seconds 0	15	30	45
0	25	20	20	20
1	25	25	25	25
2	25	25	25	25
3	25	25	25	25
4	25	25	25	25
5	25	25	25	25
0	25	25	25	30
1	30	25	25	30
2	25	25	25	30
3	30	30	30	30
4	35	35	35	30
5	30	30	30	30
0	30	30	30	30
1	25	25	25	25
2	25	30	40	50
3	50	60	60	70
4	70	60	25	25
5	25	25	25	25

Diagram Of Observation/Discharge Point

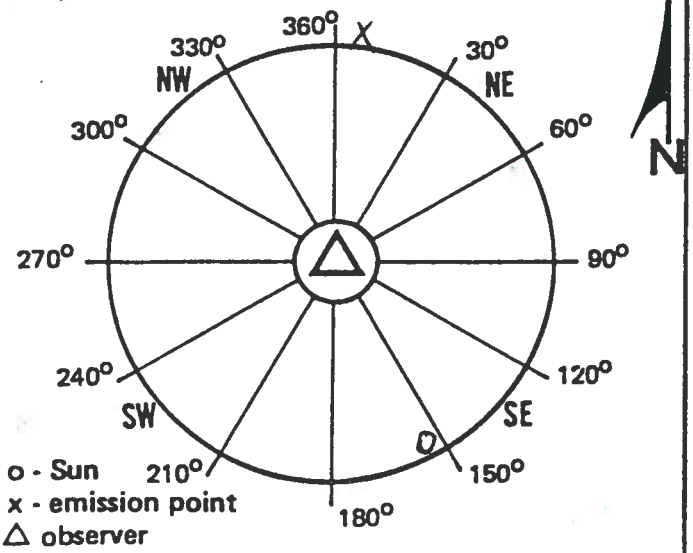

Remarks:

Cleaning # 4 Boiler

Started 9:45

Stopped 11:30

Received By: _____

Visible Emissions Evaluation Record

nt Name: Hercules Inc.

dress: West 7th St.

y: Hilburg Miss.

ission Point: 009

te: 2-29-84

mission point operation normal ? _____

V. E. Observer: Bobbie Draughn

Certification Expiration: 4-27-84

Set No.	Time Start	Time End	Opacity Sum	Opacity Average
1	12°5 pm	12 17 pm	465	19.4
2	12 " pm	12 17 pm	1175	49.0
3	12 17 pm	12 23 pm	1940	80.8

Overall Average: 49.7

	Initial	Final
tance to discharge	2 Lengths	
rection to discharge	NNE	
ight of observation point	Ground	
ight of discharge	200 ft.	
ume color	Gray	
ume background	Blue Sky	
ater vapor in plume ?		
ind direction (from)	NW	
ind speed	15-20 mph	
mbient temperature	48°	
ischarge temperature		
cy conditions	Pc	

Diagram Of Observation/Discharge Point

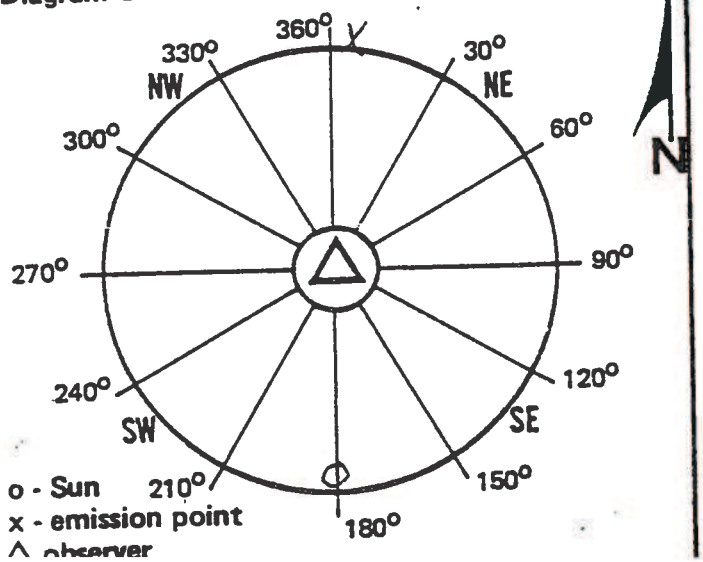

Min.	Seconds 0	15	30	45
0	10	15	15	15
1	15	15	20	20
2	25	20	20	20
3	25	25	25	25
4	20	20	20	25
5	20	20	15	15
0	20	15	20	25
1	20	20	15	15
2	15	25	40	40
3	50	75	75	75
4	70	80	80	90
5	90	70	80	80
0	80	80	90	90
1	90	90	80	80
2	80	80	80	80
3	70	70	90	90
4	80	80	80	80
5	80	80	80	80

Remarks:

Cleaning # 2 Boiler

START 11:30

Stopped 1:00

HERCULES

Hercules Incorporated
West 7th Street
P.O. Box 1937
Hattiesburg, MS 39401
(601) 545-3450

February 23, 1984

RECEIVED
FEB 24 REC'D
DEPT OF NATURAL RESOURCE
BUREAU OF POLLUTION CONTROL

Mr. Dwight K. Wylie, P.E. Chief
Air Division
Bureau of Pollution Control
P. O. Box 10385
Jackson, Mississippi 39209

Dear Mr. Wylie:

In reference to operating Permit No. 0800-0001, please find the attached monthly report detailing the compliance status of the boilers for emission points 009 and 010.

We will continue to submit this report on a monthly basis.

Very truly yours,

Charles Jordan
Environmental Supervisor

CSJ:bs

Attachments

HERCULES

Interoffice Memo

Hattiesburg, Mississippi
February 23, 1984

To: C. S. Jordan

From: L. C. Polk

OPERATING PERMIT NO. 0800-00001 HATTIESBURG, MISSISSIPPI
ISSUED FOR THE OPERATION OF AIR EMISSIONS EQUIPMENT

In reference to the above permit, Part III, other requirements, 1-C, the following monthly report is for January 1984.

The report details the compliance status of the boilers with copies of all visible emissions evaluations in which any reading exceeds 40% opacity.

Number of VEE copies attached = 18

L. C. Polk

LCP:bs

Attachments

B. B. Golden

Visible Emissions Evaluation Reco...

ant Name: Hercules Inc.

ddress: W 7th Street

ity: H'burg Miss.

mission Point: 0-10

ate: 1-30-84

emission point operation normal ?

	Initial	Final
istance to discharge	2 Lengths	
irection to discharge	NE	
leight of observation point	Ground	
leight of discharge	225 ft	
lume color	Gray	
lume background	Gray	
Vater vapor in plume ?		
Vind direction (from)	W	
Vind speed	15-20 mph	
Ambient temperature	57°	
Discharge temperature		
Sky conditions	PC	

Diagram Of Observation/Discharge Point

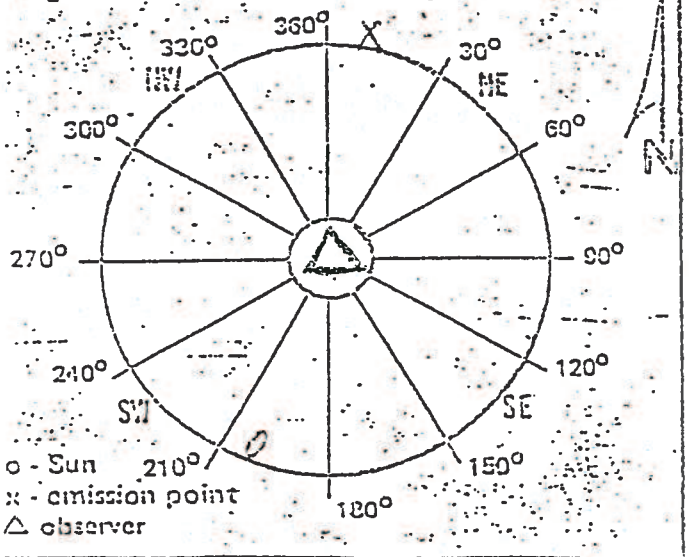

V. E. Observer: Bobbie Draughn

Certification Expiration: 4-27-84

Set No.	Time Start	Time End	Opacity Sum	Opacity Average
1	12:20 pm	12:26 pm	425	17.7
2	12:26 pm	12:32 pm	575	24.0
3	12:32 pm	12:38 pm	575	24.0

Overall Average: 21.9

Min.	Seconds 0	15	30	45
0	15	15	20	20
1	15	15	20	20
2	15	15	20	20
3	20	20	20	20
4	20	20	20	15
5	15	15	15	15
0	15	100	100	40
1	20	20	20	20
2	15	15	15	15
3	15	15	15	10
4	15	15	15	15
5	20	15	15	15
0	15	15	15	15
1	20	35	35	25
2	30	25	25	50
3	25	25	30	30
4	20	20	20	20
5	20	20	20	20

Remarks:

Cleaning # 4 Boiler

Started 10:50 AM

Stopped 12:45 PM

Received By:

Visible Emissions Evaluation Reco

ant Name: Hercules Inc

ddress: W 7th Street

ty: H'burg Miss

nission Point: 009

ate: 1-30-84

emission point operation normal ? _____

V. E. Observer: Bobbie Draughn

Certification Expiration: 4-27-84

Set No.	Time		Opacity	
	Start	End	Sum	Average
1	12 35 PM	12 35 PM	540	22.5
2	12 35 PM	12 37 PM	375	15.6
3	12 37 PM	12 39 PM	355	16.0

Overall Average: 18.0

	Initial	Final
Distance to discharge	2 Lengths	
Direction to discharge	NE	
Height of observation point	Ground	
Height of discharge	200 ft	
Plume color	Gray	
Plume background	Gray	
Water vapor in plume ?		
Wind direction (from)	E	
Wind speed	15-20 mph	
Ambient temperature	57°	
Discharge temperature		
Sky conditions	PC	

	Seconds			
Min.	0	15	30	45
0	10	10	10	10
1	30	40	30	25
2	25	30	40	50
3	30	20	20	15
4	15	15	25	10
5	20	15	20	25
0	40	30	30	30
1	30	25	20	25
2	20	10	10	10
3	10	5	5	5
4	10	10	10	10
5	10	10	5	5
0	30	30	10	10
1	20	20	20	15
2	10	15	15	15
3	10	10	10	10
4	10	10	10	5
5	15	10	10	15

Diagram Of Observation/Discharge Point

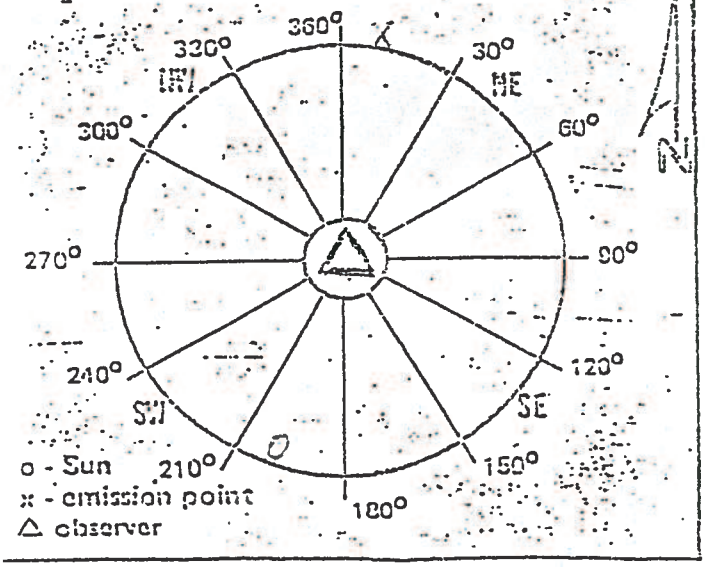

Remarks: _____

Received By: _____

Lacey Polk

Visible Emissions Evaluation Reco

Plant Name: Hercules INC

Address: W 7th Street

City: H'burg Miss

Emission Point: 009 (South)

Date: 1-24-84

Is emission point operation normal ?

V. E. Observer: Howell Russ

Certification Expiration: 4-27-84

Set No.	Time		Opacity	
	Start	End	Sum	Average
1	12 05 pm	12 11 pm	1085	45.2
2	12 11	12 17 pm	1110	46.3
3	12 17 pm	12 23 pm	1005	41.9

Overall Average: 44.5

	Initial	Final
Distance to discharge	2 Lengths	
Direction to discharge	N.E	
Height of observation point	Ground	
Height of discharge	200 ft	
Plume color	Gray	
Plume background	Gray	
Water vapor in plume ?		
Wind direction (from)	South	
Wind speed	5 MPH	
Ambient temperature	60°	
Discharge temperature		
Sky conditions	Cloudy	

Min.	Seconds 0	15	30	45
0	70	70	75	70
1	60	58	40	30
2	30	30	35	35
3	45	40	40	40
4	30	35	30	30
5	50	50	50	50
0	40	45	40	40
1	30	30	30	30
2	35	35	35	35
3	35	40	45	45
4	70	70	70	70
5	60	60	60	60
0	50	40	40	40
1	35	35	35	35
2	35	40	45	45
3	75	80	75	80
4	25	25	25	25
5	30	30	30	30

Diagram Of Observation/Discharge Point

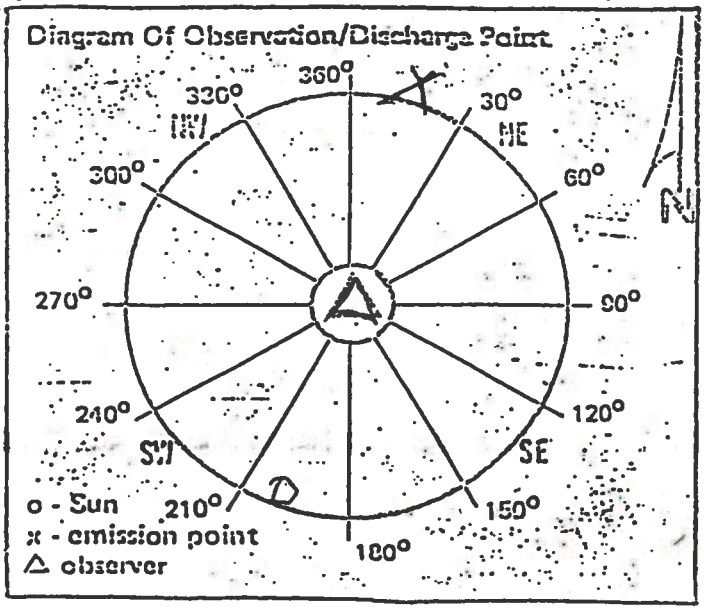

Remarks:

Received By:

Visible Emissions Evaluation Reco

Plant Name: Hercules IWC

Address: W 7th Street

City: H'burg, Miss

Emission Point: 010 (North)

Date: 1-24-84

V. E. Observer: Howell Reas

Certification Expiration: 4-27-84

Set No.	Time Start	Time End	Opacity Sum	Opacity Average
1	12 05 pm	12 11 pm	865	36
2	12 11 pm	12 17 pm	695	29
3	12 17 pm	12 23 pm	660	27.5

Overall Average: 30.8

Is emission point operation normal? _____

	Initial	Final
Distance to discharge	2 Lengths	
Direction to discharge	N.E.	
Height of observation point	Ground	
Height of discharge	225 ft	
Plume color	Gray	
Plume background	Gray	
Water vapor in plume?		
Wind direction (from)	South	
Wind speed	5MPH	
Ambient temperature	60°	
Discharge temperature		
Sky conditions	Cloudy	

Diagram Of Observation/Discharge Point

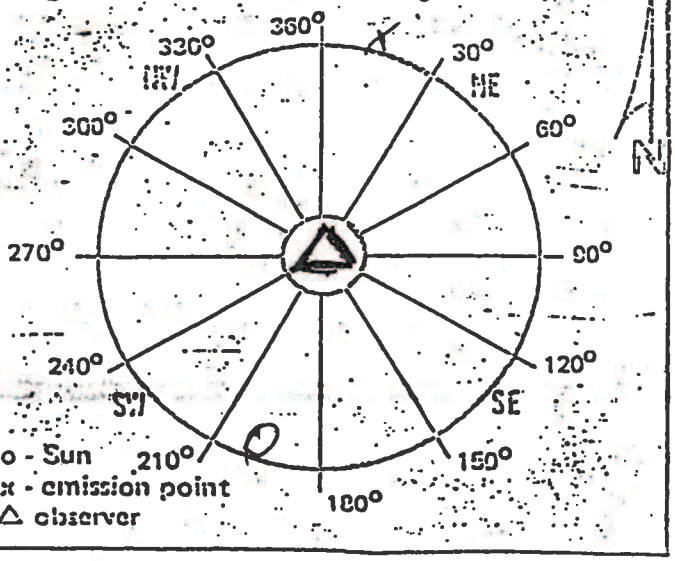

Min.	Seconds 0	15	30	45
0	35	35	35	35
1	20	20	20	20
2	15	15	15	15
3	20	20	20	20
4	55	55	50	60
5	70	75	70	70
0	30	30	30	30
1	15	15	15	15
2	75	75	75	75
3	30	25	20	20
4	15	15	15	15
5	15	15	15	15
0	35	35	35	35
1	30	30	30	30
2	30	30	30	30
3	30	30	30	30
4	20	20	20	20
5	20	20	20	20

Remarks:

Cleaning # 1 Boiler

Started 10:30 AM

Stopped 2:15 PM

Received By: _____

Visible Emissions Evaluation Reco...

ant Name: Hercules INC

ddress: W 7th Street

ty: H'burg, Miss

mission Point: 0090

ate: 1-23-84

emission point operation normal ? _____

	Initial	Final
istance to discharge	2 Lengths	
irection to discharge	N.E.	
eight of observation point		
eight of discharge		
ume color	Gray	
ume background	Gray	
ater vapor in plume ?		
ind direction (from)	S.E	
ind speed	10 MPH	
mbient temperature	46°	
ischarge temperature		
ky conditions	Cloudy	

Diagram Of Observation/Discharge Point

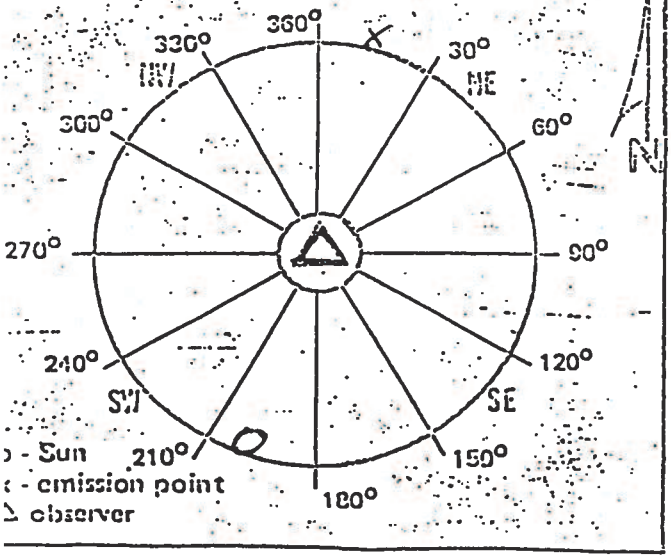

o - Sun
x - emission point
Δ observer

V. E. Observer: Howell Russ

Certification Expiration: 4-27-84

Set No.	Time Start	Time End	Opacity Sum	Opacity Average
South Stack	10 05 AM	10 11 AM	(1) 960	40
	10 11	10 17 AM	(2) 1120	46.7
	10 23 AM	10 29 AM	(3) 900	37.5

Overall Average: 41.4

Min.	Seconds 0	15	30	45
0 (1)	35	35	35	35
1	40	40	40	40
2	40	40	40	40
3	40	40	40	40
4	40	40	40	40
5	45	45	45	45
0 (2)	50	50	50	50
1	55	55	55	55
2	50	50	50	50
3	45	45	45	45
4	40	40	40	40
5	40	40	40	40
0 (3)	40	40	40	40
1	35	35	35	35
2	40	40	40	40
3	35	35	35	35
4	35	35	35	35
5	40	40	40	40

Remarks:

Cleaning # 1 Boiler

Started 7:30 AM

Stopped 1:40 PM

Received By: _____

B. B. Golden

Visible Emissions Evaluation Record

Plant Name: Hercules Inc.

Address: W 7th Street

City: H'burg Miss.

Emission Point: Tank Stack

Date: 1-20-84

Is emission point operation normal ?

V. E. Observer: Bobbie Draughn

Certification Expiration: 4-27-84

Set No.	Time Start	Time End	Opacity Sum	Opacity Average
①	9:45 Am	9:55 Am	645	26.9
②	9:50 Am	9:55 Am	555	23.1
③	9:55 Am	10:00 Am	665	27.7

Overall Average: 25.9

	Initial	Final
Distance to discharge	2 Lengths	
Direction to discharge	NE	
Height of observation point		
Height of discharge		
Plume color	Gray	
Plume background	Blue	
Water vapor in plume ?		
Wind direction (from)	E	
Wind speed	10-20 mph	
Ambient temperature	26°	
Discharge temperature		
Sky conditions	PC	

Diagram Of Observation/Discharge Point

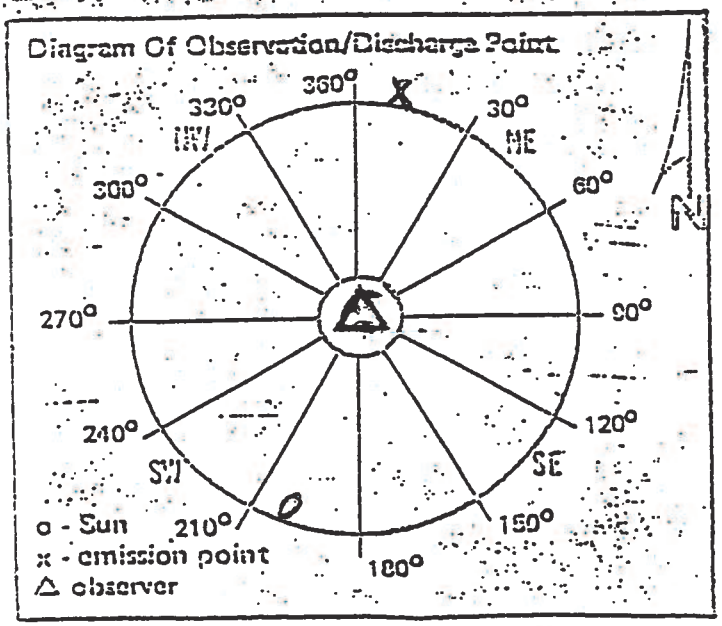

Min.	Seconds 0	15	30	45
① 0	15	15	15	15
1	15	15	20	20
2	20	20	25	25
3	25	25	25	25
4	25	25	40	50
5	65	50	20	20
② 0	15	20	20	25
1	25	25	25	25
2	20	20	20	20
3	30	30	30	25
4	25	25	25	25
5	20	20	20	20
③ 0	25	25	25	25
1	20	25	25	25
2	25	25	25	30
3	30	60	30	30
4	25	45	25	20
5	20	25	25	30

Remarks: CLEANING # 3 Boiler
STARTED 8:41 Am
STOPPED 11:25 Am

Received By:

Visible Emissions Evaluation Reco

Plant Name: Hercules Inc

Address: W. 7th Street

City: H'burg Miss

Emission Point: South Stack

Date: 1-20-84

Is emission point operation normal ?

V. E. Observer: Bobbie Draughn

Certification Expiration: 4-27-84

Set No.	Time Start	Time End	Opacity Sum	Opacity Average
①	9⁰⁵ Am	9⁵⁰ Am	795	33.1
②	9⁵⁰ Am	9⁵⁵ Am	185	32.7
③	9⁵⁵ Am	10⁰⁰ Am	920	39.3

Overall Average: 34.7

	Initial	Final
Distance to discharge	2 Lengths	
Direction to discharge	NE	
Height of observation point		
Height of discharge		
Plume color	Gray	
Plume background	Blue	
Water vapor in plume ?		
Wind direction (from)	E	
Wind speed	10-20 mph	
Ambient temperature	26°	
Discharge temperature		
Sky conditions	PC	

Min.	Seconds 0	15	30	45
0	25	35	40	40
1	40	40	40	40
2	45	40	40	35
3	25	25	25	25
4	25	25	40	30
5	25	30	30	30
0	30	25	20	20
1	25	25	25	35
2	35	35	40	35
3	40	30	30	30
4	35	35	35	40
5	40	40	40	40
0	30	30	30	35
1	35	35	40	40
2	50	45	45	40
3	40	40	50	40
4	30	30	35	50
5	40	30	30	40

Diagram Of Observation/Discharge Point

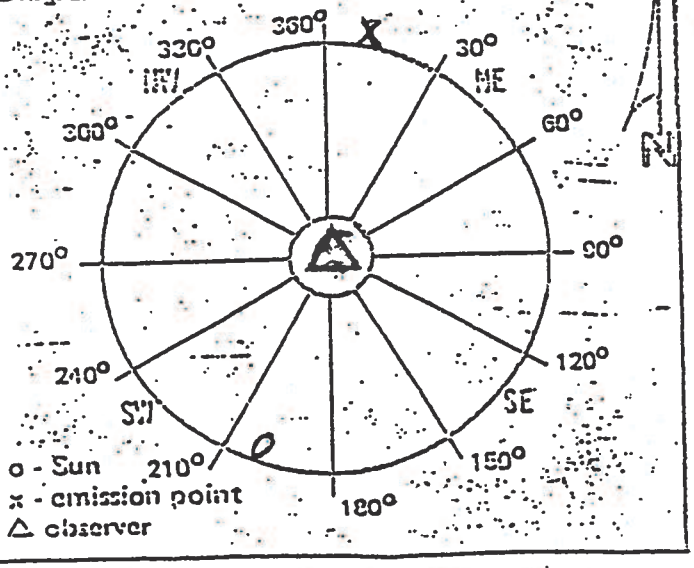

Remarks:

Received By:

B. B. Golden

Visible Emissions Evaluation Reco

lant Name: Hercules INC

ddress: W 7th Street

ity: H'burg Miss.

mission Point:

ate: 1-19-84

s emission point operation normal ?

	Initial	Final
Distance to discharge	2 Lengths	
Direction to discharge	N.E.	
Height of observation point		
Height of discharge		
Plume color	Gray	
Plume background	Blue	
Water vapor in plume ?		
Wind direction (from)	N.W	
Wind speed	10MPH	
Ambient temperature	32°	
Discharge temperature		
Sky conditions	Clear	

V. E. Observer: Howell Russ

Certification Expiration: 4-27-84

Set No.	Time Start	Time End	Opacity Sum	Opacity Average
North Stack	① 10 10 Am	10 16 Am	1080	45.0
	② 10 16 Am	10 22 Am	1030	42.9
	③ 10 22	10 28 Am	820	34.2

Overall Average: 40.7

Min.	Seconds 0	15	30	45
0 ①	45	45	45	45
1	45	45	45	45
2	50	50	50	50
3	45	45	45	45
4	40	40	40	40
5	45	45	45	45
0 ②	50	50	50	50
1	50	50	50	50
2	45	45	45	45
3	40	40	40	40
4	40	40	40	40
5	30	30	30	30
0 ③	30	30	30	30
1	35	35	35	35
2	30	30	30	30
3	35	35	35	35
4	30	30	30	30
5	45	45	45	45

Diagram Of Observation/Discharge Point

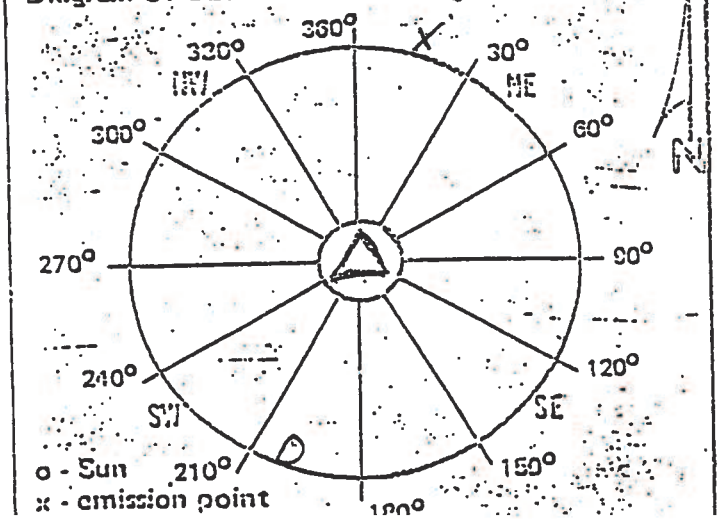

Remarks:

Cleaning #3 Boiler

started 8:30 Am

Stopped 9:50 AM

Visible Emissions Evaluation Recor

Plant Name: Hercules INC

Address: W 7th Street

City: H'burg Miss

Emission Point:

Date: 1-19-84

Is emission point operation normal ?

V. E. Observer: Howell Lucas

Certification Expiration: 4-27-84

Set No.	Time Start	Time End	Opacity Sum	Opacity Average
South Stack (1)	10 AM	10 16 AM	1075	44.8
(2)	10 16 AM	10 22 AM	760	31.7
(3)	10 22 AM	10 28 AM	480	20.0

Overall Average: 32.2

	Initial	Final
Distance to discharge	2 Lengths	
Direction to discharge	N.E.	
Height of observation point		
Height of discharge		
Plume color	Gray	
Plume background	Blue	
Water vapor in plume ?		
Wind direction (from)	N.W	
Wind speed	10 MPH	
Ambient temperature	32°	
Discharge temperature		
Sky conditions	Clear	

Min.	Seconds 0	15	30	45
0 (1)	55	50	50	50
1	45	45	45	45
2	40	40	40	40
3	50	50	50	50
4	40	40	40	40
5	45	45	40	40
0 (2)	40	50	55	60
1	45	40	40	35
2	35	35	30	30
3	25	25	25	25
4	25	20	20	20
5	20	20	20	20
0 (3)	15	15	15	15
1	25	25	30	30
2	25	25	20	20
3	20	20	20	20
4	20	20	20	20
5	15	15	15	15

Diagram Of Observation/Discharge Point

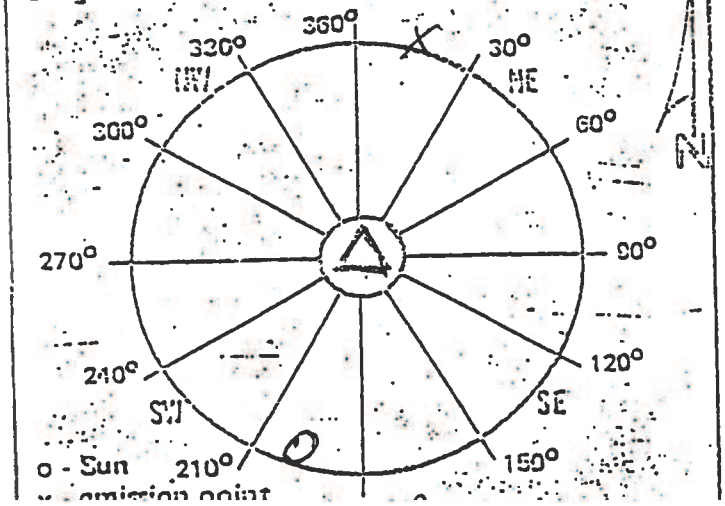

Remarks:

B. B. Golden

Visible Emissions Evaluation Reco

Plant Name: Hercules Inc.

Address: W. 7th Street

City: H'burg Miss

Emission Point:

Date: 1-18-84

Is emission point operation normal ?

V. E. Observer: Bobbie Draughn

Certification Expiration: 4-27-84

Set No.	Time Start	Time End	Opacity Sum	Opacity Average
North Stack ①	12:20 PM	12:25 PM	770	32.1
②	12:25 PM	12:30 PM	730	30.4
③	12:30 PM	12:35 PM	710	29.6

Overall Average: 30.7

	Initial	Final
Distance to discharge	2 Lengths	
Direction to discharge	NE	
Height of observation point		
Height of discharge		
Plume color	Gray	
Plume background	Gray	
Water vapor in plume ?		
Wind direction (from)	W	
Wind speed	10 mph	
Ambient temperature	41°	
Discharge temperature		
Sky conditions	Raining	

	Min.	Seconds 0	15	30	45
①	0	40	40	30	40
	1	30	30	25	25
	2	25	25	25	25
	3	30	30	30	30
	4	30	40	40	40
	5	30	30	40	40
②	0	30	30	25	30
	1	25	25	25	25
	2	25	25	30	30
	3	30	35	35	40
	4	40	40	35	30
	5	30	30	30	30
③	0	30	30	30	30
	1	30	35	35	40
	2	30	30	30	25
	3	25	25	25	25
	4	20	25	25	20
	5	25	30	40	50

Diagram Of Observation/Discharge Point

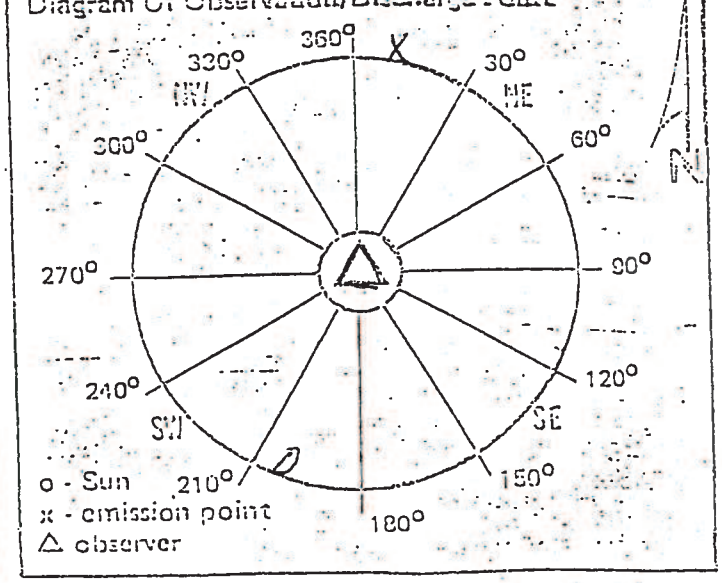

Remarks: Cleaning # 4 Boiler
Started 11:30 AM
Stopped 12:35 PM

Received By:

Visible Emissions Evaluation Record

Plant Name: Hercules INC

Address: W 7th Street

City: H'burg, Miss

Emission Point: _____

Date: 1-16-84

Is emission point operation normal ? _____

V. E. Observer: Howell Lewis

Certification Expiration: 4-27-84

Set No.	Time Start	Time End	Opacity Sum	Opacity Average
South Stack ①	12:10 PM	12:15 PM	860	35.8
②	12:15 PM	12:30 PM	460	19.2
③	12:20 PM	12:25 PM	780	32.5

Overall Average: 29.2

	Initial	Final
Distance to discharge	2 Lengths	
Direction to discharge	N.E	
Height of observation point		
Height of discharge		
Plume color	Gray	
Plume background	Gray	
Water vapor in plume ?		
Wind direction (from)	N.E	
Wind speed	5 MPH	
Ambient temperature	47	
Discharge temperature		
Sky conditions	Cloudy	

	Min.	Seconds 0	15	30	45
①	0	25	25	25	25
	1	30	30	30	30
	2	35	35	35	35
	3	40	40	40	40
	4	40	40	40	40
	5	45	45	45	45
②	0	20	20	20	20
	1	20	20	20	20
	2	15	15	15	15
	3	20	20	20	20
	4	20	20	20	20
	5	20	20	20	20
③	0	30	30	30	30
	1	25	25	25	25
	2	30	30	30	30
	3	35	35	35	35
	4	35	35	35	35
	5	40	40	40	40

Diagram Of Observation/Discharge Point

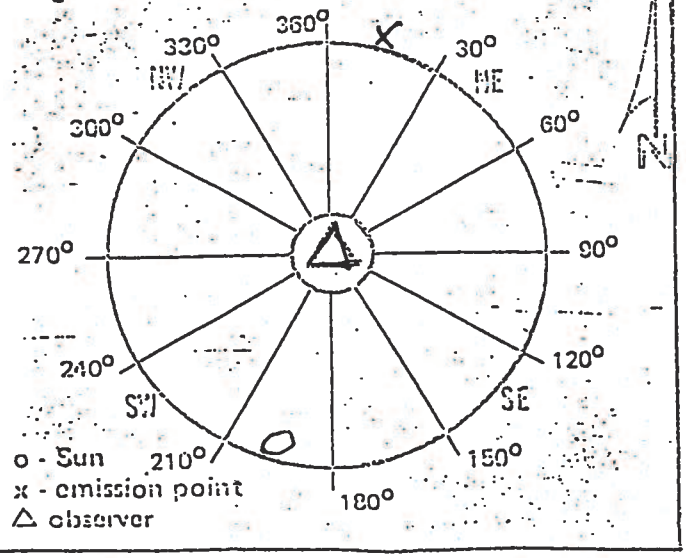

Remarks: Cleaning # 1 Boiler
Started 9:55 AM
Stopped 1:55 PM

Received By: _____

B. B. Golden

Visible Emissions Evaluation Reco

Plant Name: Hercules Inc.

Address: W. 7th Street

City: H'burg Miss

Emission Point: ____

Date: 1-12-84

Is emission point operation normal ? ____

V. E. Observer: Bobbie Draughn

Certification Expiration: 4-27-84

Set No.	Time		Opacity	
	Start	End	Sum	Average
North Stack	9 55 AM	10 15 AM	3945	54.8

Overall Average: ____

	Initial	Final
Distance to discharge	2 Lengths	
Direction to discharge	NE	
Height of observation point		
Height of discharge		
Plume color	Gray	
Plume background	Blue	
Water vapor in plume ?		
Wind direction (from)	SE	
Wind speed	10 mph	
Ambient temperature	44°	
Discharge temperature		
Sky conditions	PC	

Min.	Seconds 0	15	30	45
0	50	70	70	70
1	40	25	50	50
2	75	75	55	30
3	30	40	60	60
4	75	90	60	50
5	70	50	80	70
0	50	60	50	70
1	70	60	60	60
2	60	60	40	30
3	30	30	25	50
4	70	30	30	35
5	30	45	50	65
0	65	50	50	50
1	50	50	65	60
2	50	50	40	40
3	35	40	50	50
4	50	50	75	90
5	90	90	90	80

Diagram Of Observation/Discharge Point

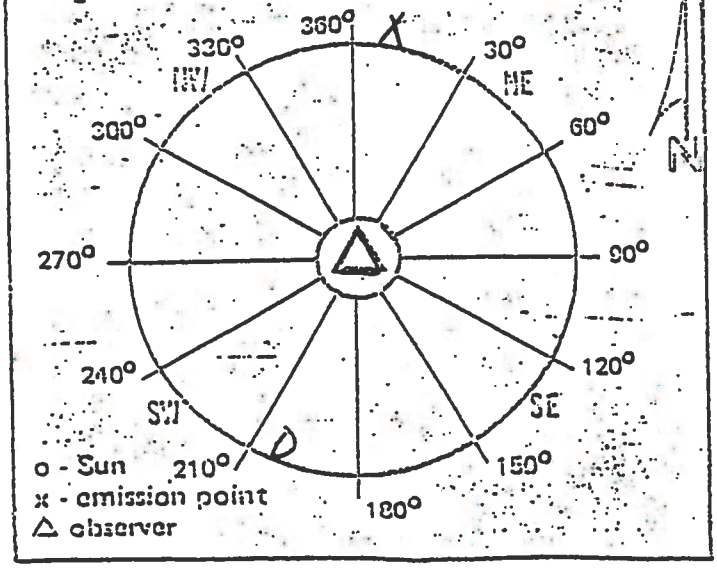

Remarks: Cleaning #4 Boiler
Started 9:01 AM
Stopped 10:15 AM

Received By: ____

Visible Emissions Evaluation Reco

Plant Name: Hercules Inc

Address: W. 7th Street

City: H'burg Miss

Emission Point:

Date: 1-12-84

Is emission point operation normal ?

	Initial	Final
Distance to discharge	2 Lengths	
Direction to discharge	NE	
Height of observation point		
Height of discharge		
Plume color	Gray	
Plume background	Blue	
Water vapor in plume ?		
Wind direction (from)	SE	
Wind speed	10 mph	
Ambient temperature	44°	
Discharge temperature		
Sky conditions	PC	

Diagram Of Observation/Discharge Point

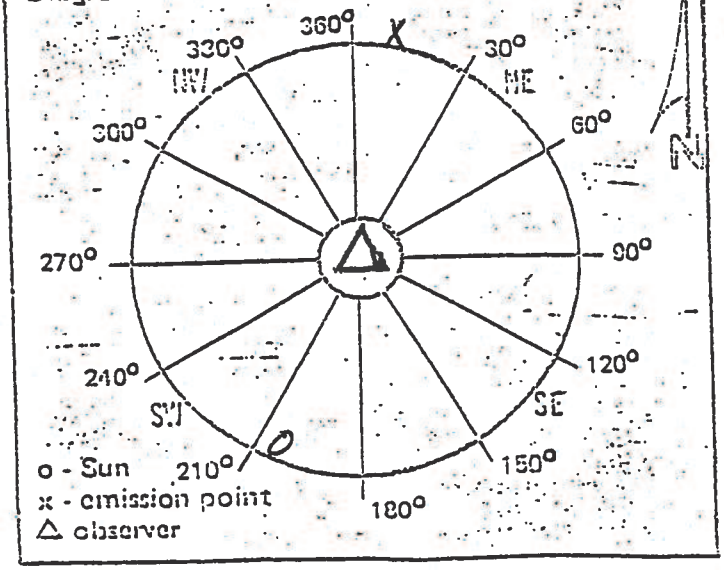

V. E. Observer: Bobbie Draughn

Certification Expiration: 4-27-84

Set No.	Time Start	Time End	Opacity Sum	Opacity Average
South Stack	9 55 Am	10 15 Am	1510	21.0

Overall Average:

Min.	Seconds 0	15	30	45
0	20	15	15	15
1	15	15	15	10
2	15	15	15	15
3	15	15	15	15
4	15	15	15	15
5	15	15	15	15
0	10	10	10	20
1	30	25	20	50
2	25	25	20	30
3	20	15	25	25
4	25	25	30	45
5	30	30	30	25
0	25	40	30	20
1	20	20	20	20
2	15	15	20	20
3	15	15	20	20
4	20	30	30	20
5	25	20	30	40

Remarks:

Received By:

Visible Emissions Evaluation Reco

Plant Name: HERCULES INC

Address: W 7th Street

City: H'burg, Miss

Emission Point:

Date: 1-11-84

Is emission point operation normal ?

V. E. Observer: Howell Ruas

Certification Expiration: 4-27-84

Set No.	Time		Opacity	
	Start	End	Sum	Average
North Stack	12 40 pm	1PM	2640	36.7

Overall Average:

	Initial	Final
Distance to discharge	2 Lengths	
Direction to discharge	N E	
Height of observation point		
Height of discharge		
Plume color	Gray	
Plume background	Blue	
Water vapor in plume ?		
Wind direction (from)	N W	
Wind speed	5 MPH	
Ambient temperature	41°	
Discharge temperature		
Sky conditions	Clear	

Min.	Seconds 0	15	30	45
0	40	40	40	40
1	45	45	45	45
2	40	40	40	40
3	25	25	25	25
4	30	30	30	30
5	25	25	25	25
0	30	30	30	30
1	35	35	35	35
2	35	35	35	35
3	45	45	45	45
4	55	55	55	55
5	40	40	40	40
0	40	40	40	40
1	35	35	35	35
2	35	35	35	35
3	30	30	30	30
4	35	35	35	35
5	40	40	40	40

Diagram Of Observation/Discharge Point

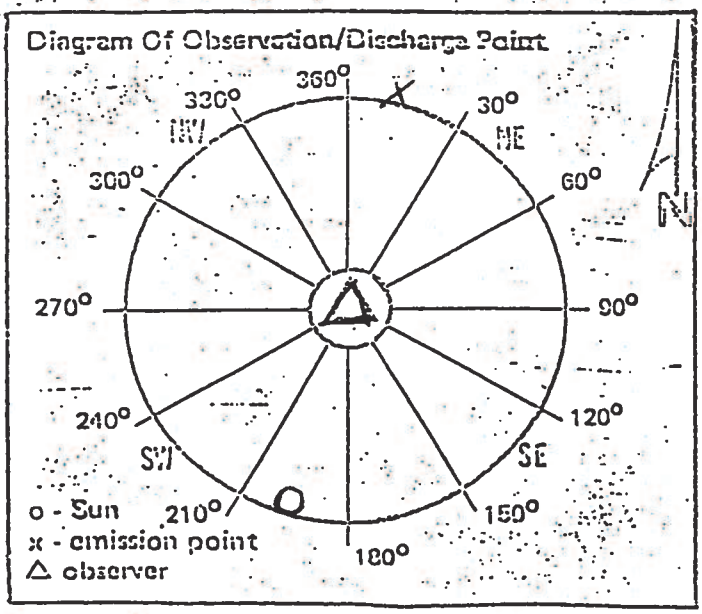

Remarks:

Received By:

Visible Emissions Evaluation Reco

Plant Name: Hercules INC

Address: W 7th Street

City: H'burg, Miss

Emission Point: ____

Date: 1-11-84

Is emission point operation normal ? ____

V. E. Observer: Howell Lucas

Certification Expiration: 4-27-84

Set No.	Time		Opacity	
	Start	End	Sum	Average
South Stack	12 40 pm	1 00 pm	2400	33.3

Overall Average: ____

	Initial	Final
Distance to discharge	2 Lengths	
Direction to discharge	N.E	
Height of observation point		
Height of discharge		
Plume color	Gray	
Plume background	Blue	
Water vapor in plume ?		
Wind direction (from)	N.W	
Wind speed	5 MPH	
Ambient temperature	41 0	
Discharge temperature		
Sky conditions	Clear	

Min.	Seconds 0	15	30	45
0	40	40	40	40
1	35	35	35	35
2	30	30	30	30
3	25	25	25	25
4	20	20	20	20
5	25	25	25	25
0	30	30	30	30
1	35	35	35	35
2	40	40	40	40
3	45	45	45	45
4	40	40	40	40
5	35	35	35	35
0	30	30	30	30
1	30	30	30	30
2	35	35	35	35
3	35	35	35	35
4	30	30	30	30
5	40	40	40	40

Diagram Of Observation/Discharge Point

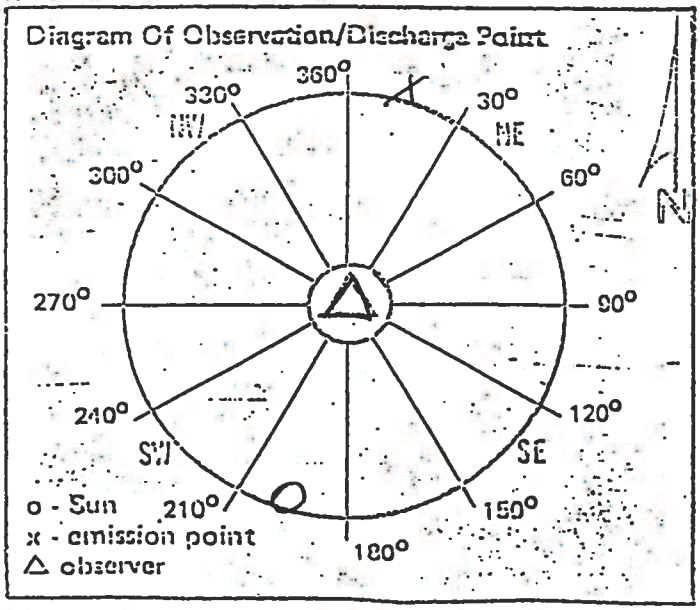

Remarks: ____

Received By: ____

B. B. Golden

Visible Emissions Evaluation Recor

Plant Name: Hercules Inc.

Address: W. 7th Street

City: H'burg Miss

Emission Point:

Date: 1-10-84

Is emission point operation normal ?

V. E. Observer: Howell Luas

Certification Expiration: 4-27-84

Set No.	Time		Opacity	
	Start	End	Sum	Average
North Stack	10 00 AM	10 20 AM	2660	36.9

Overall Average:

	Initial	Final
Distance to discharge	2 Lengths	
Direction to discharge	N.E	
Height of observation point		
Height of discharge		
Plume color	Gray	
Plume background	Gray	
Water vapor in plume ?		
Wind direction (from)	N.E	
Wind speed	10 MPH	
Ambient temperature	54°	
Discharge temperature		
Sky conditions	Cloudy	

Diagram Of Observation/Discharge Point

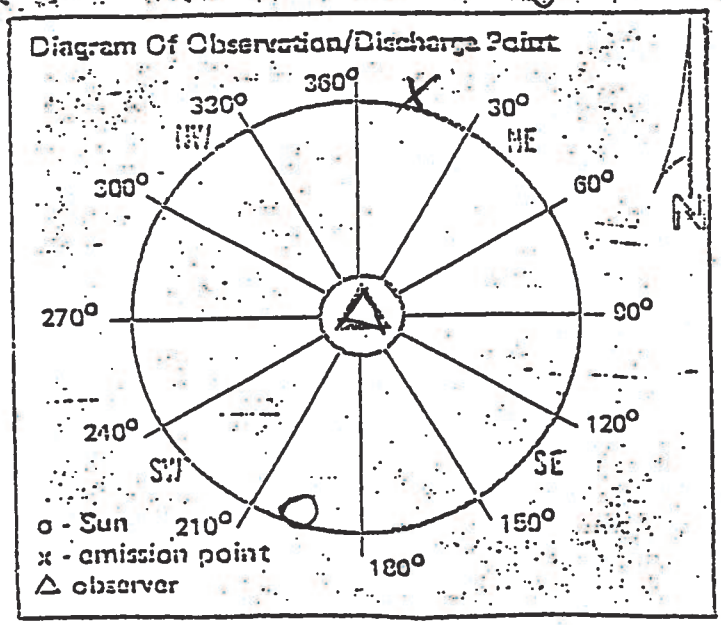

Min.	Seconds 0	15	30	45
0	35	35	35	35
1	40	40	40	40
2	35	35	35	35
3	40	40	40	40
4	40	40	40	40
5	40	40	40	40
0	45	45	45	45
1	45	45	45	45
2	40	40	40	40
3	35	35	35	35
4	30	30	30	30
5	40	40	40	40
0	35	35	35	35
1	30	30	30	30
2	35	35	35	35
3	30	30	30	30
4	30	30	30	30
5	40	40	40	40

Remarks:

Received By:

Visible Emissions Evaluation Reco_

Plant Name: Hercules Inc.

Address: W. 7th Street

City: Hbing Miss

Emission Point: _____

Date: 1-4-84

Is emission point operation normal ? _____

V. E. Observer: Bobbie Draughn

Certification Expiration: 4-27-84

Set No.	Time		Opacity	
	Start	End	Sum	Average
North Stack	12 45 PM	1 05 PM	3020	41.9

Overall Average: _____

	Initial	Final
Distance to discharge	2 Lengths	
Direction to discharge	NE	
Height of observation point		
Height of discharge		
Plume color	Gray	
Plume background	Blue	
Water vapor in plume ?		
Wind direction (from)	SW	
Wind speed	10 mph	
Ambient temperature	60°	
Discharge temperature		
Sky conditions	Fair	

Min.	Seconds 0	15	30	45
0	20	20	30	30
1	25	25	25	25
2	40	40	30	30
3	30	25	25	25
4	40	60	45	30
5	30	30	30	50
0	50	50	35	35
1	40	50	40	25
2	25	25	30	40
3	70	60	80	60
4	50	40	40	30
5	25	25	40	50
0	50	60	35	50
1	80	90	90	75
2	70	70	95	60
3	90	70	60	40
4	20	20	25	25
5	25	25	20	20

Diagram Of Observation/Discharge Point

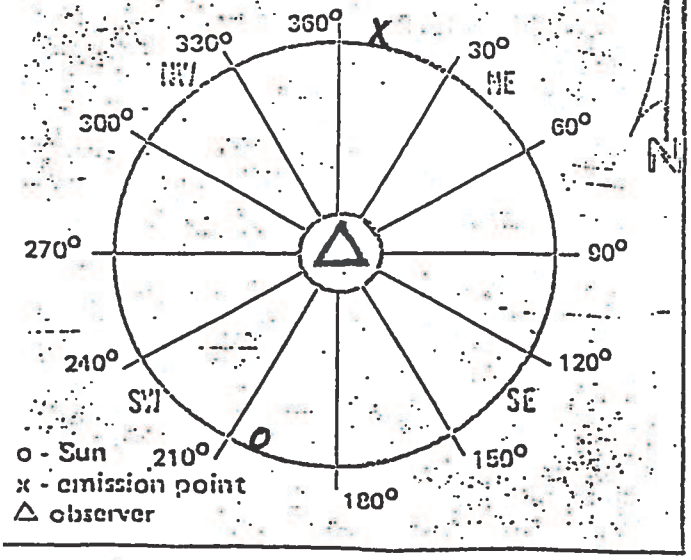

Remarks: _____

Received By: _____

B. B. Golden

Visible Emissions Evaluation Reco

Plant Name: Hercules Inc

Address: W. 7th Street

City: H'burg Miss

Emission Point: _____

Date: 1-3-84

Is emission point operation normal ? _____

V. E. Observer: Bobbie Draughn

Certification Expiration: 4-27-84

Set No.	Time		Opacity	
	Start	End	Sum	Average
North Stack	12 N	12 30 Pm	2740	38.1

Overall Average: _____

	Initial	Final
Distance to discharge	2 Lengths	
Direction to discharge	NE	
Height of observation point		
Height of discharge		
Plume color	White	
Plume background	Blue	
Water vapor in plume ?		
Wind direction (from)	NE	
Wind speed	10 mph	
Ambient temperature	49°	
Discharge temperature		
Sky conditions	Fair	

Diagram Of Observation/Discharge Point

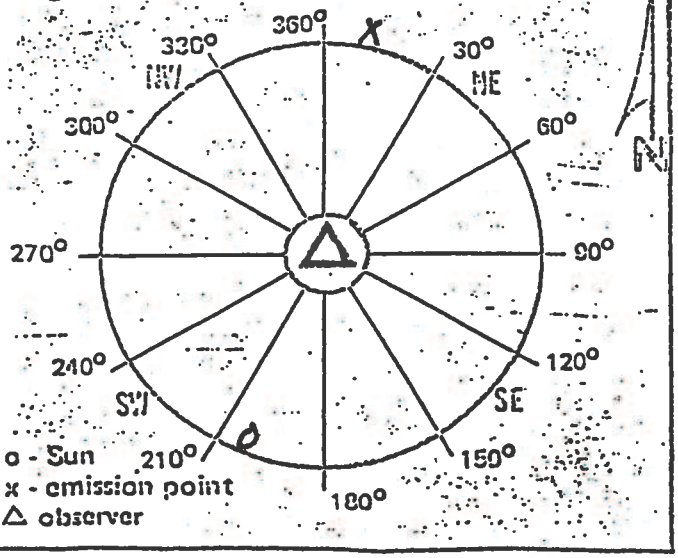

Min.	Seconds 0	15	30	45
0	10	10	10	10
1	10	10	10	10
2	5	5	5	5
3	5	5	5	5
4	10	30	80	70
5	70	70	70	80
0	80	50	60	60
1	60	50	50	40
2	50	50	40	40
3	30	30	20	20
4	20	30	30	30
5	30	20	20	20
0	20	20	40	30
1	40	30	40	40
2	50	60	60	70
3	70	60	70	70
4	70	60	60	50
5	50	50	50	50

Remarks: Cleaning # 3 Boiler
Started 11:05 AM
Stopped 12:25 PM

Received By: _____

HERCULES

Hercules Incorporated
West 7th Street
P.O. Box 1937
Hattiesburg, MS 39401
(601) 545-3450

January 18, 1984

RECEIVED
JAN 19 RECD
DEPT OF NAT. RESOURCE
BUREAU OF PULLUTION CONTROL

Mr. Dwight K. Wylie, P.E. Chief
Air Division
Bureau of Pollution Control
P. O. Box 10385
Jackson, Mississippi 39209

Dear Mr. Wylie:

Re operating Permit No. 0800-0001, please find the attached monthly report detailing the compliance status of the boilers for emission points 009 and 010.

We will continue to submit this report on a monthly basis.

Very truly yours,

Charles Jordan

Charles Jordan
Environmental Supervisor

CSJ:ml

Attachments

cc: D. T. Smith
W. H. Etheridge

HERCULES

Interoffice Memo

Hattiesburg, Mississippi
January 10, 1984

TO: C. S. Jordan

FROM: L. C. Polk

OPERATING PERMIT NO. 0800-00001 HATTIESBURG, MISSISSIPPI
ISSUED FOR THE OPERATION OF AIR EMISSIONS EQUIPMENT

Re the above referenced permit, Part III, other requirements, 1-C, the following monthly report is for December, 1983.

The report details the compliance status of the boilers with copies of all visible emissions evaluations in which any reading exceeds 40% opacity.

Number of VEE copies attached = 13.

LCP:ml

Attachments

L. C. Polk

Visible Emissions Evaluation Record

Plant Name: Hercules Inc. V. E. Observer: Howard Lucas

Address: W 7th Street Certification Expiration: 4-27-84

City: H'burg, Miss

Emission Point: _____

Date: 12-2-83

Is emission point operation normal ? _____

Set No.	Time		Opacity	
	Start	End	Sum	Average
North Stack	1 00 pm	1 20 pm	2160	30

Overall Average: _____

	Initial	Final
Distance to discharge	2 LENGTHS	
Direction to discharge	N.E	
Height of observation point		
Height of discharge		
Plume color	Gray	
Plume background	Gray	
Water vapor in plume ?		
Wind direction (from)	NE	
Wind speed	10 MPH	
Ambient temperature	72°	
Discharge temperature		
Sky conditions	Cloudy	

Min.	Seconds 0	15	30	45
0	25	25	25	25
1	25	25	25	25
2	25	25	25	25
3	30	30	30	30
4	35	35	35	35
5	35	35	35	35
0	35	35	35	35
1	30	30	30	30
2	40	40	40	40
3	45	45	45	45
4	30	30	30	30
5	25	25	25	25
0	20	20	20	20
1	25	25	25	25
2	25	25	25	25
3	25	25	25	25
4	30	30	30	30
5	35	35	35	35

Diagram Of Observation/Discharge Point

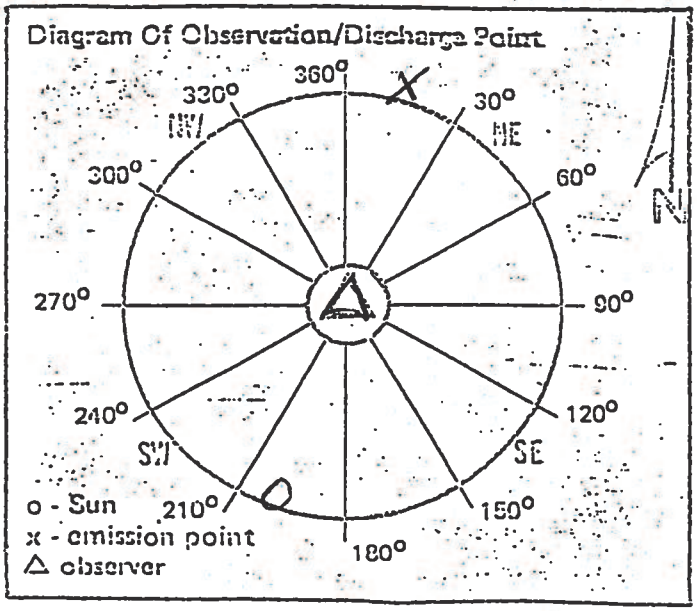

Remarks: _____

Received By: _____

B.B. Golden

Visible Emissions Evaluation Reco

Plant Name: Hercules. Inc

Address: W 7th Street

City: H'burg Miss

Emission Point:

Date: 12-9-83

Is emission point operation normal ?

V. E. Observer: Howell Russ

Certification Expiration: 4-27-83

Set No.	Time		Opacity	
	Start	End	Sum	Average
North Stack	1 05 PM	1 25 PM	2240	31.1

Overall Average: 31

	Initial	Final
Distance to discharge	2 Leng Hts	
Direction to discharge	N.E.	
Height of observation point		
Height of discharge		
Plume color	Gray	
Plume background	Blue	
Water vapor in plume ?		
Wind direction (from)	S.E	
Wind speed	5 MPH	
Ambient temperature	65	
Discharge temperature		
Sky conditions	Cloudy	

Diagram Of Observation/Discharge Point

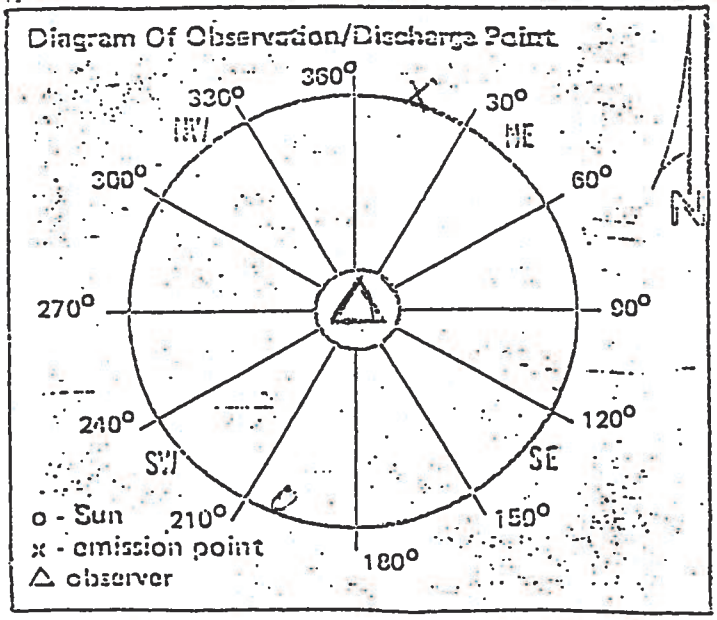

Min.	Seconds 0	15	30	45
0	30	30	30	30
1	35	35	35	35
2	30	30	30	30
3	30	30	30	30
4	20	20	20	20
5	15	15	15	15
0	10	10	10	10
1	20	20	20	20
2	25	25	25	25
3	30	30	30	30
4	30	30	30	30
5	35	35	35	35
0	35	35	35	35
1	40	40	40	40
2	45	45	45	45
3	50	50	50	50
4	45	45	45	45
5	35	35	35	35

Remarks:

Received By:

B. B. Golden

Visible Emissions Evaluation Recor

Plant Name: Hercules Inc.

Address: W. 7th St.

City: H'burg Miss.

Emission Point: _____

Date: 12-12-83

Is emission point operation normal ? _____

V. E. Observer: Bobbie Draughn

Certification Expiration: 4-27-84

Set No.	Time		Opacity	
	Start	End	Sum	Average
North Stack	12 25 pm	12 45 pm	215.5	29.9

Overall Average: _____

	Initial	Final
Distance to discharge	2 Lengths	
Direction to discharge	NE	
Height of observation point		
Height of discharge		
Plume color	Gray	
Plume background	Gray	
Water vapor in plume ?		
Wind direction (from)	W	
Wind speed	10 mph	
Ambient temperature	51	
Discharge temperature		
Sky conditions	Cloudy	

Min.	Seconds 0	15	30	45
0	45	45	25	25
1	30	25	25	25
2	25	35	25	20
3	35	30	35	30
4	40	30	40	35
5	35	40	30	35
0	35	35	40	35
1	35	35	30	30
2	25	20	25	35
3	20	25	20	20
4	20	20	20	20
5	25	20	25	30
0	30	35	35	40
1	35	30	35	35
2	25	30	30	30
3	30	35	30	35
4	35	30	35	35
5	30	20	20	20

Diagram Of Observation/Discharge Point

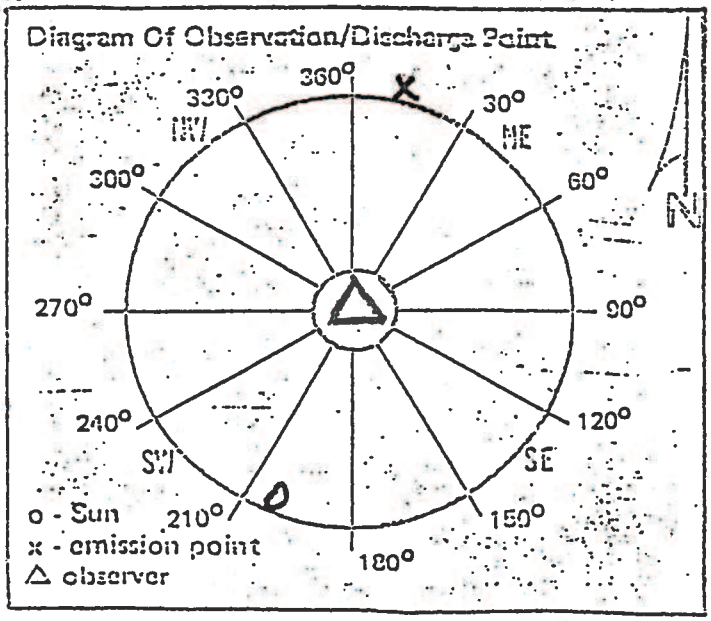

Remarks: _____

Received By: _____

B. B. Golden

Visible Emissions Evaluation Reco

Plant Name: Hercules Inc.

Address: W. 7th St.

City: H'burg Miss.

Emission Point:

Date: 12-13-83

Is emission point operation normal ?

V. E. Observer: Bobbie Draughn

Certification Expiration: 4-27-84

Set No.	Time Start	Time End	Opacity Sum	Opacity Average
North Stack	1 05 PM	1 25	1795	24.9

Overall Average:

	Initial	Final
Distance to discharge	2 Lengths	
Direction to discharge	NE	
Height of observation point		
Height of discharge		
Plume color	Gray	
Plume background	Gray	
Water vapor in plume ?		
Wind direction (from)	SE	
Wind speed	10 mph	
Ambient temperature	54	
Discharge temperature		
Sky conditions	Partly cloudy	

Min.	Seconds 0	15	30	45
0	20	15	15	15
1	20	25	25	25
2	25	25	25	20
3	25	20	20	25
4	25	25	20	20
5	20	20	20	25
0	25	30	25	25
1	30	25	20	20
2	20	20	20	25
3	35	40	30	20
4	20	30	35	35
5	25	20	15	20
0	35	40	50	40
1	25	20	20	15
2	20	30	40	45
3	30	35	30	30
4	25	20	20	20
5	20	15	20	20

Diagram Of Observation/Discharge Point

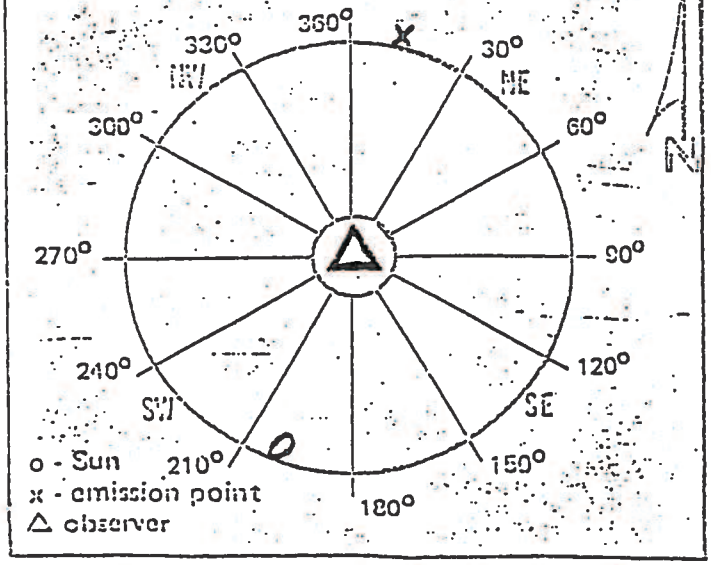

Remarks:

Received By:

B. B. Golden

Visible Emissions Evaluation Record

Plant Name: Hercules Inc. | V. E. Observer: Bobbie Draughn

Address: W. 7th St. | Certification Expiration: 4-27-84

City: H'burg Miss.

Emission Point: _____

Date: 12-14-83

Is emission point operation normal ? _____

Set No.	Time Start	Time End	Opacity Sum	Opacity Average
North Stack	12 40 PM	1 00 PM	2000	27.8
			-	

Overall Average: _____

	Initial	Final
Distance to discharge	2 Lengths	
Direction to discharge	NE	
Height of observation point		
Height of discharge		
Plume color	Gray	
Plume background	Blue	
Water vapor in plume ?		
Wind direction (from)	W	
Wind speed	5-10 mph	
Ambient temperature	54	
Discharge temperature		
Sky conditions	PC	

Diagram Of Observation/Discharge Point

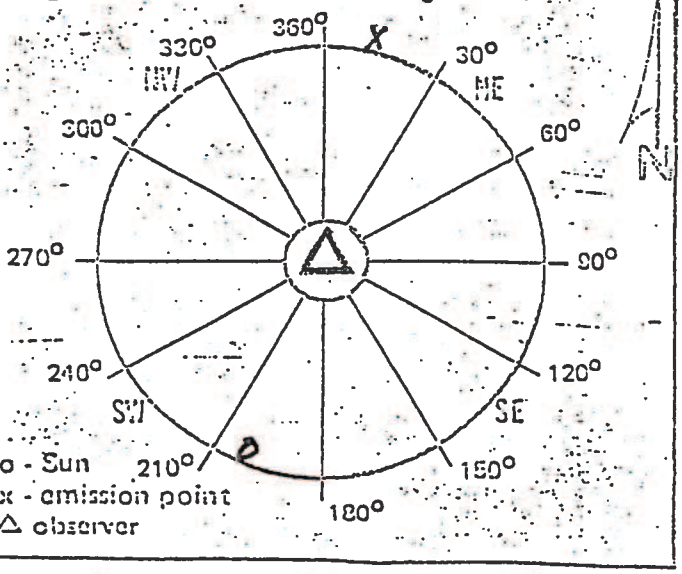

Min.	Seconds 0	15	30	45
0	15	15	15	40
1	50	30	25	15
2	20	20	15	20
3	20	20	15	15
4	20	25	20	25
5	25	30	25	25
0	25	25	25	35
1	45	60	60	45
2	25	25	35	70
3	40	30	25	25
4	30	30	25	25
5	30	45	40	40
0	35	50	65	25
1	20	20	25	30
2	30	25	20	20
3	20	20	20	20
4	15	15	15	20
5	20	15	25	25

Remarks: _____

Received By: _____

Visible Emissions Evaluation Reco

Plant Name: Hercules Inc.

Address: W. 7th St

City: H'burg Miss.

Emission Point: _____

Date: 12-15-83

Is emission point operation normal ? _____

V. E. Observer: Bobbie Droughn

Certification Expiration: 4-27-84

Set No.	Time		Opacity	
	Start	End	Sum	Average
South Stack	11⁴⁵ Am	12⁰⁰ Pm	1705	23.7

Overall Average: _____

	Initial	Final
Distance to discharge	2 Lengths	
Direction to discharge	NE	
Height of observation point		
Height of discharge		
Plume color	Gray	
Plume background	Blue	
Water vapor in plume ?		
Wind direction (from)	W	
Wind speed	5 mph	
Ambient temperature	57	
Discharge temperature		
Sky conditions	Fair	

Min.	Seconds 0	15	30	45
0	15	25	20	20
1	15	15	15	15
2	15	15	15	15
3	15	15	15	15
4	10	15	15	20
5	20	25	30	35
0	30	30	25	30
1	30	30	30	45
2	30	30	40	35
3	30	25	30	30
4	30	30	30	25
5	25	25	30	45
0	50	30	30	20
1	15	15	15	20
2	25	25	25	25
3	25	35	30	20
4	25	15	15	15
5	15	15	15	15

Diagram Of Observation/Discharge Point

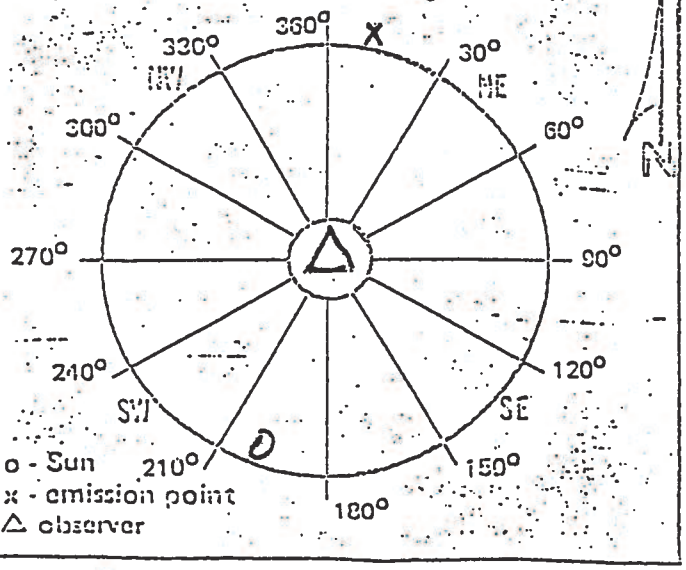

Remarks: _____

Received By: _____

B. B. Holder

Visible Emissions Evaluation Reco

Plant Name: Hercules Inc

Address: W. 7th St.

City: H'burg Miss.

Emission Point:

Date: 12-15 83

Is emission point op tion normal ?

V. E. Observer: Robbie Draughn

Certification Expiration: 4-27-84

Set No.	Time		Opacity	
	Start	End	Sum	Average
North Stack	11 45 AM	12 05 PM	2025	28.1

Overall Average:

	Initial	Final
Distance to discharg	2 Lengths	
Direction to dischar	NE	
Height of observatio point		
Height of discharge		
Plume color	Gray	
Plume background	Blue	
Water vapor in plum ?		
Wind direction (fron	West	
Wind speed	5 mph	
Ambient temperatu	57	
Discharge temperatu		
Sky conditions	Fair	

Min.	Seconds 0	15	30	45
0	25	25	35	20
1	25	30	35	40
2	65	60	60	60
3	90	75	80	80
4	35	25	20	20
5	20	20	30	20
0	20	15	20	20
1	30	25	25	30
2	25	15	25	25
3	20	25	25	30
4	25	20	20	15
5	15	15	15	20
0	20	25	35	25
1	20	20	20	25
2	25	20	20	55
3	25	20	15	15
4	15	15	20	20
5	20	15	15	15

Diagram Of Obser ion/Discharge Point

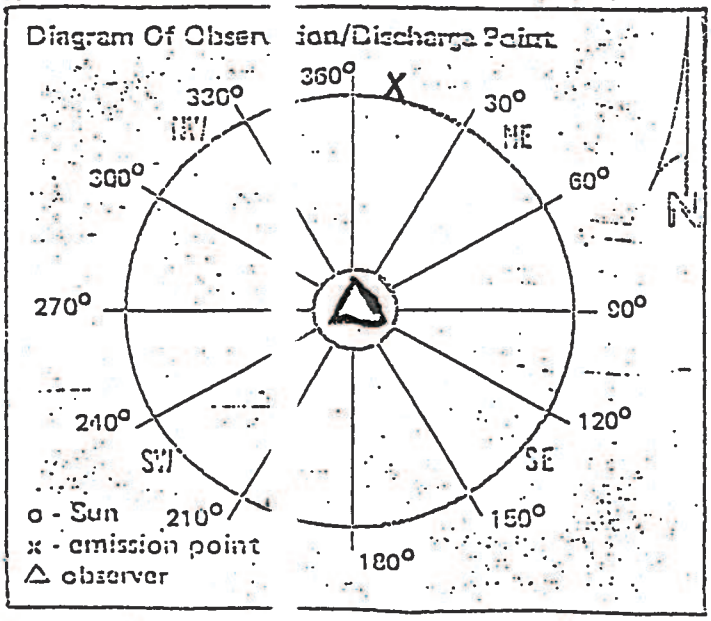

Remarks:

Received By:

B. B. Golden

Visible Emissions Evaluation Recor

Plant Name: Hercules Inc

Address: W 7th Street

City: Hattiesburg, Miss

Emission Point: 1

Date: 12-16-83

V. E. Observer: Howell Ross

Certification Expiration: 4-27-84

Set No.	Time		Opacity	
	Start	End	Sum	Average
North Stack	12 11 pm	12 31 pm	248	34.4

Overall Average:

Is emission point operation normal ?

	Initial	Final
Distance to discharge	2 Lengths	
Direction to discharge	N.E.	
Height of observation point		
Height of discharge		
Plume color	Grey	
Plume background	Blue	
Water vapor in plume ?		
Wind direction (from)	N.W.	
Wind speed	10 MPH	
Ambient temperature	54°	
Discharge temperature		
Sky conditions	Partly	

Min.	Seconds 0	15	30	45
0	20	20	20	20
1	15	15	15	15
2	20	20	20	20
3	20	20	20	20
4	30	30	30	30
5	35	35	35	35
0	35	35	35	35
1	40	40	40	40
2	30	30	30	30
3	20	20	20	20
4	15	15	15	15
5	15	15	15	15
0	25	25	25	25
1	30	30	30	30
2	40	40	40	40
3	60	60	60	60
4	70	70	60	80
5	90	90	90	90

Diagram Of Observation/Discharge Point

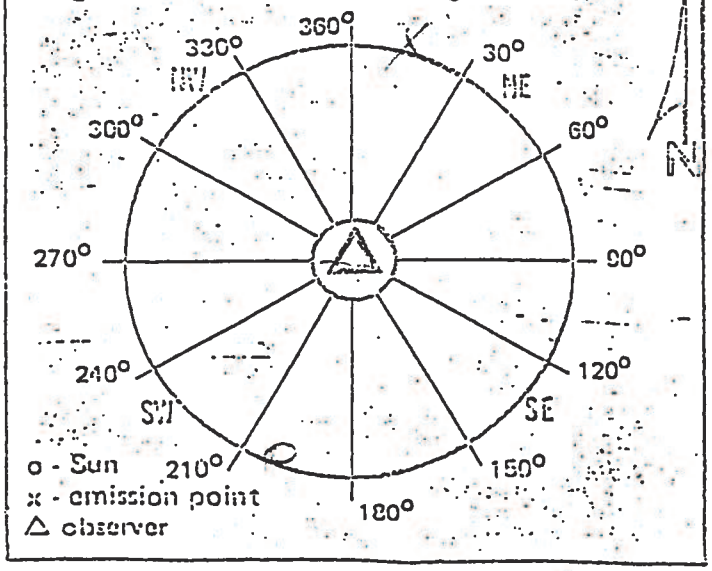

Remarks:

Received By:

B.B. Golden

Visible Emissions Evaluation Record

Plant Name: Hercules Inc.

Address: W 7th Street

City: H'burg, Miss

Emission Point: _____

Date: 12-22-83

Is emission point operation normal ? _____

V. E. Observer: J. Lowell Lucas

Certification Expiration: 4-27-84

Set No.	Time		Opacity	
	Start	End	Sum	Average
North Stack	10 40 AM	11 00 AM	2820	39.2

Overall Average: 39

	Initial	Final
Distance to discharge	2 Lengths	
Direction to discharge	NE	
Height of observation point		
Height of discharge		
Plume color	Gray	
Plume background	Gray	
Water vapor in plume ?		
Wind direction (from)	N.W	
Wind speed	15 MPH	
Ambient temperature	41°	
Discharge temperature		
Sky conditions	Cloudy	

Min.	Seconds 0	15	30	45
0	35	35	35	35
1	35	35	35	35
2	35	35	35	35
3	35	35	35	35
4	35	35	35	35
5	30	30	30	30
0	40	40	40	40
1	45	45	45	45
2	50	50	50	50
3	55	55	55	55
4	60	60	60	60
5	60	60	60	60
0	60	60	60	60
1	50	50	50	50
2	30	30	30	30
3	20	20	20	20
4	15	15	15	15
5	15	15	15	15

Diagram Of Observation/Discharge Point

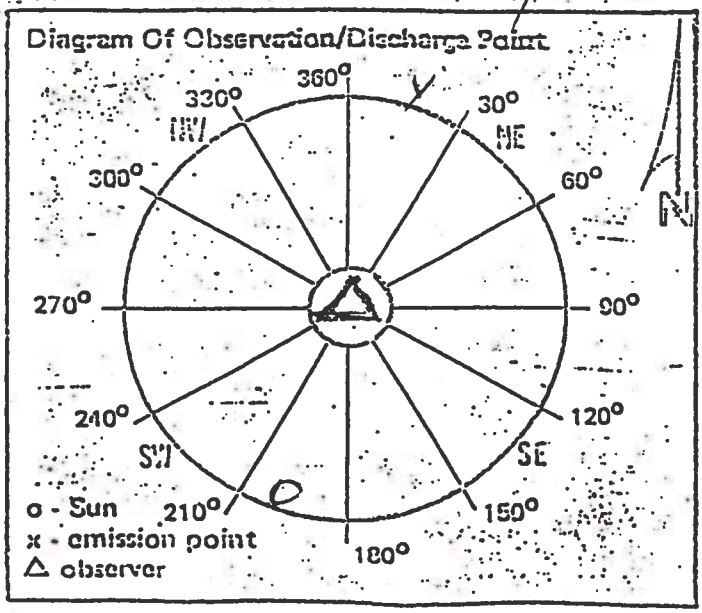

Remarks: _____

Received By: _____

Visible Emissions Evaluation Recor

Plant Name: Hercules, Inc

Address: W. 7th Street

City: H'burg Miss

Emission Point: _____

Date: 12-27-83

Is emission point operation normal ? _____

V. E. Observer: Bobbie Draughn

Certification Expiration: 4-27-84

Set No.	Time		Opacity	
	Start	End	Sum	Average
South Stack	12 15 Pm	12 35 Pm	4920	68.3

	Initial	Final
Distance to discharge	2 Lengths	
Direction to discharge	NE	
Height of observation point		
Height of discharge		
Plume color	Gray	
Plume background	Gray	
Water vapor in plume ?		
Wind direction (from)	SE	
Wind speed	5 mph	
Ambient temperature	52°	
Discharge temperature		
Sky conditions	Raining	

Overall Average: _____

Min.	Seconds 0	15	30	45
0	50	50	50	50
1	60	70	70	75
2	75	90	90	100
3	100	100	90	90
4	80	75	75	75
5	80	75	75	75
0	75	75	75	85
1	90	100	100	100
2	90	90	75	65
3	60	65	45	30
4	30	30	25	25
5	30	30	30	30
0	30	30	30	40
1	40	40	50	70
2	80	80	80	90
3	90	85	80	80
4	70	85	90	90
5	90	75	75	90

Diagram Of Observation/Discharge Point

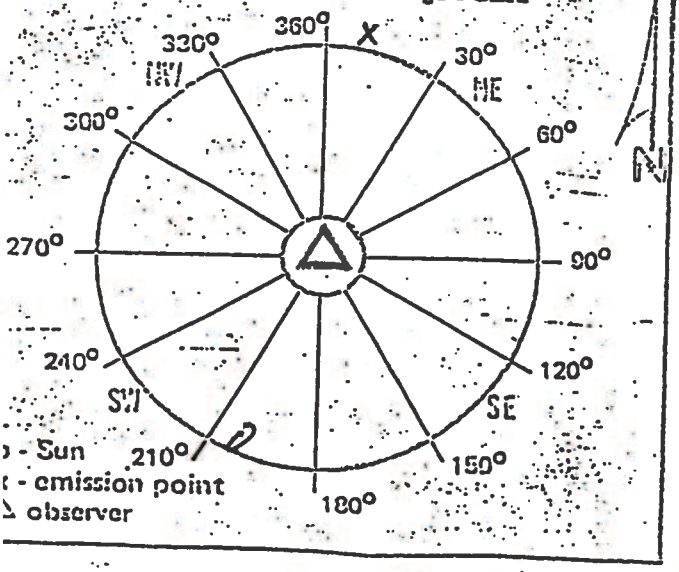

Remarks: _____

Received By: _____

B. B. Golden

Visible Emissions Evaluation Record

Plant Name: Hercules Inc.

Address: W. 7th Street

City: H'burg Miss.

Emission Point: _____

Date: 12-27-83

Is emission point operation normal ? _____

V. E. Observer: Bobbie Draughn

Certification Expiration: 4-27-84

Set No.	Time		Opacity	
	Start	End	Sum	Average
North Stack	12 15 PM	12 35 PM	1560	21.7

	Initial	Final
Distance to discharge	2 Lengths	
Direction to discharge	NE	
Height of observation point		
Height of discharge		
Plume color	Gray	
Plume background	Gray	
Water vapor in plume ?		
Wind direction (from)	SE	
Wind speed	5 mph	
Ambient temperature	52°	
Discharge temperature		
Sky conditions	Raining	

Overall Average: _____

Min.	Seconds 0	15	30	45
0	15	15	15	15
1	15	15	15	15
2	10	10	10	10
3	15	15	15	15
4	15	15	15	15
5	15	15	10	10
0	10	15	15	15
1	15	15	15	15
2	100	100	100	100
3	100	100	95	15
4	15	15	15	15
5	15	15	15	15
0	15	10	10	10
1	15	15	15	15
2	15	16	15	15
3	15	15	15	15
4	15	15	15	15
5	16	15	15	16

Diagram Of Observation/Discharge Point

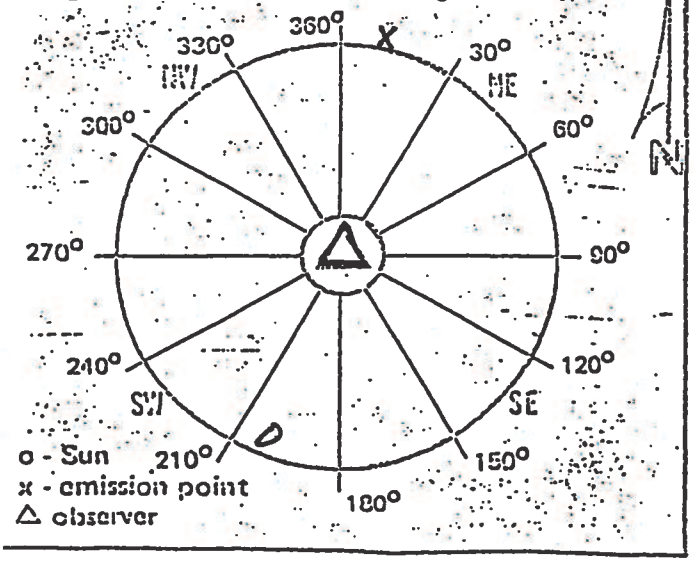

Remarks: _____

Received By: _____

B. B. Golden

Visible Emissions Evaluation Record

Plant Name: Hercules, Inc.

Address: W. 7th Street

City: Hwy Miss.

Emission Point: _____

Date: 12-29-83

Is emission point operation normal ? _____

V. E. Observer: Bobbie Draughn

Certification Expiration: 4-27-84

Set No.	Time		Opacity	
	Start	End	Sum	Average
North Stack	12 25 PM	12 45 PM	1530	21.3

Overall Average: _____

	Initial	Final
Distance to discharge	2 Lengths	
Direction to discharge	NE	
Height of observation point		
Height of discharge		
Plume color	Gray	
Plume background	Blue	
Water vapor in plume ?		
Wind direction (from)	NW	
Wind speed	10-20 m/h	
Ambient temperature	33°	
Discharge temperature		
Sky conditions	PC	

Min.	Seconds 0	15	30	45
0	15	15	15	15
1	20	20	20	30
2	30	40	40	40
3	50	60	40	15
4	60	45	20	15
5	15	10	10	10
0	10	10	10	10
1	10	10	10	10
2	15	15	15	15
3	15	15	15	15
4	15	15	15	15
5	20	20	20	20
0	20	20	20	20
1	15	15	15	25
2	25	30	20	25
3	25	20	20	20
4	15	15	15	15
5	15	15	15	10

Diagram Of Observation/Discharge Point

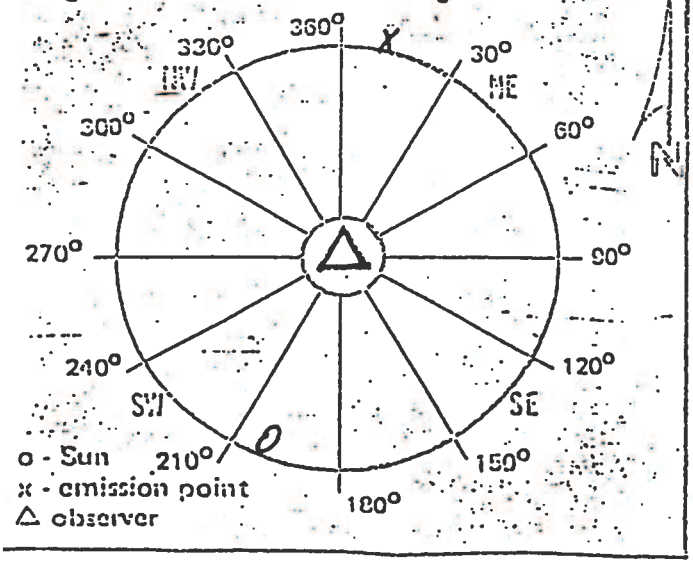

Remarks: _____

Received By: _____

B. B. Golden

Visible Emissions Evaluation Reco

Plant Name: Hercules, Inc.

Address: W. 7th Street

City: Hburg Miss

Emission Point: _____

Date: 12-30-83

Is emission point operation normal ? _____

V. E. Observer: Bobbie Draughn

Certification Expiration: 4-27-84

Set No.	Time Start	Time End	Opacity Sum	Opacity Average
Plant Stack	12 25 PM	12 45 PM	1805	25.1

Overall Average: _____

	Initial	Final
Distance to discharge	2 Lengths	
Direction to discharge	NE	
Height of observation point		
Height of discharge		
Plume color	Gray	
Plume background	Blue	
Water vapor in plume ?		
Wind direction (from)	NW	
Wind speed	10 mph	
Ambient temperature	27°	
Discharge temperature		
Sky conditions	Fair	

Min.	Seconds 0	15	30	45
0	10	10	10	10
1	15	15	10	10
2	15	15	15	15
3	10	10	10	10
4	15	30	20	20
5	30	25	25	25
0	30	30	25	25
1	25	25	25	25
2	25	25	20	20
3	20	25	40	40
4	40	30	25	25
5	25	25	20	20
0	25	25	30	30
1	20	20	30	30
2	30	40	40	40
3	40	35	30	25
4	30	30	40	40
5	30	30	50	50

Diagram Of Observation/Discharge Point

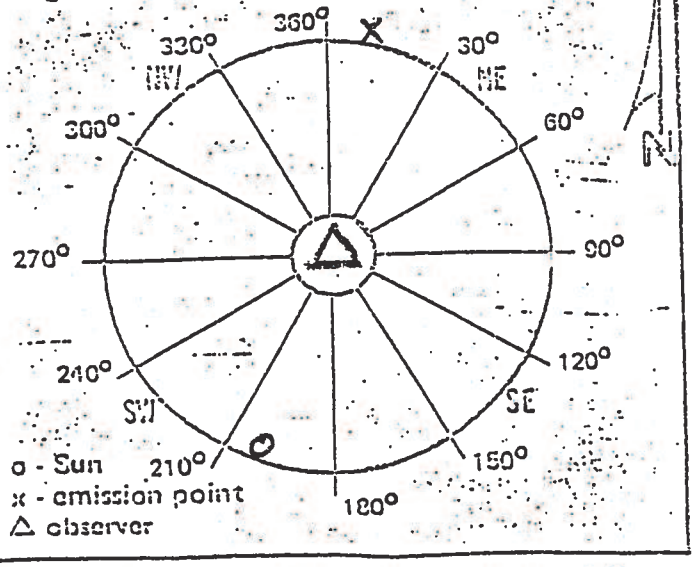

Remarks: _____

Received By: _____