Tronox LLC, Columbus

General Information

ID	Branch	SIC	County	Basin	Start	End
1696	Chemical	2491	Lowndes	Tombigbee River	10/27/1992	

Address

Physical Address (Primary)	Mailing Address
2300 14th Avenue North Columbus, MS 39701	PO Box 268859 Oklahoma City, OK 731268859

Telecommunications

Type	Address or Phone
Work phone number	(405) 775-5129

Alternate / Historic AI Identifiers

Alt ID	Alt Name	Alt Type	Start Date	End Date
2808700020	Tronox LLC, Columbus	Air-AIRS AFS	10/12/2000	06/01/2002
168000020	Kerr McGee Chemical Corporation, Columbus	Air-Construction	06/12/1998	
168000020	Kerr McGee Chemical Corporation, Columbus	Air-Synthetic Minor Operating	06/06/1997	06/01/2002
168000020	Kerr McGee Chemical Corporation, Columbus	Air-Synthetic Minor Operating	06/12/1998	06/01/2002
MSR220010	Kerr McGee Chemical Corporation, Columbus	GP-Wood Treating	10/27/1992	07/13/1997
MSD990866329	Kerr McGee Chemical Corporation, Columbus	Hazardous Waste-EPA ID	10/12/2000	
MSD990866329	Kerr McGee Chemical Corporation, Columbus	Hazardous Waste-TSD	06/11/2001	04/12/2006
MSD990866329	Tronox LLC, Columbus	Hazardous Waste-TSD	04/13/2006	05/31/2011
1696	Kerr McGee Chemical Corporation	Historic Site Name	10/27/1992	04/10/2006
1696	Tronox, LLC	Official Site Name	04/10/2006	
MSP090021	Kerr McGee Chemical Corporation, Columbus	Water-Pretreatment	10/11/1994	10/10/1999
MSP090021	Kerr McGee Chemical Corporation, Columbus	Water-Pretreatment	08/23/2000	07/31/2005
MSP090021	Kerr McGee Chemical Corporation, Columbus	Water-Pretreatment	10/31/2005	04/12/2006
MSP090021	Tronox LLC, Columbus	Water-Pretreatment	04/13/2006	09/30/2010

Regulatory Programs

Program	SubProgram	Start Date	End Date
Air	NSPS Subpart Dc	09/12/1990	06/01/2002
Air	SM	06/06/1997	06/01/2002
Hazardous Waste	Large Quantity Generator	04/01/1997	
Hazardous Waste	TSD - Not Classified	06/11/2001	
Water	PT CIU	10/11/1994	09/01/2003
Water	PT CIU - Timber Products	10/11/1994	09/01/2003

	Processing (Subpart 429)		
Water	PT NCS	09/01/2003	
Water	PT SIU	10/11/1994	

Locational Data

Latitude	Longitude	Metadata	S / T / R	Map Links
33 ° 30 ' 38 .51 (033.510697)	88 ° 24 ' 34 .02 (088.409450)	**Point Desc:** PG - Plant entrance (General) Data collected by Louis Crawford on 7/11/00. PG - Plant Entrance (General) Data collected by Clift Jeter on 6/13/02. LAT 33deg 30min 36.6sec LON 88deg 24min 35.1sec **Method:** GPS Code (Psuedo Range) Differential **Datum:** NAD83 **Type:** MDEQ	Section: Township: Range:	SWIMS TerraServer Map It

10/13/2006 10:29:50 AM

Mississippi Department of Environmental Quality
Office of Pollution Control

I-sys 2000 Master Site Detail Report

Site Name: Kerr McGee Chemical Corporation, Columbus

PHYSICAL ADDRESS

LINE 1:	2300 14th Avenue and 20th Street
LINE 2:	
LINE 3:	
MUNICIPALITY:	Columbus
STATE CODE:	MS
ZIP CODE:	39703-

MAILING ADDRESS

LINE 1:	2300 Fourteenth Avenue North
LINE 2:	
LINE 3:	
MUNICIPALITY:	Columbus
STATE CODE:	MS
ZIP CODE:	39701-

OTHER INFORMATION

MASTER ID:	001696
COUNTY:	Lowndes
REGION	NRO
SIC 1:	2491
AIR TYPE:	SYNTHETIC MINOR
HW TYPE:	TSD
SOLID TYPE:	
WATER TYPE:	INDUSTRIAL
BRANCH:	Chemical Branch

ECED CONTACT:
Hamil, Larry

BASIN:
Tombigbee River Basin

AIR PROGRAMS ☐ SIP ☐ PSD ☑ NSPS ☐ NESHAPS ☐ MACT

Mississippi Department of Environmental Quality
Office of Pollution Control

Pemits

PROGRAM	PERMIT TYPE	PERMIT #	MDEQ PERMIT CONTACT	ACTIVE
AIR	SMOP	168000020	Hall, Bobby	NO
AIR	SMOP	168000020	Shanks, Brad	YES
WATER	PRE-TREATMENT	MSP090021	Brumfield, Milton	YES
HAZ. WASTE	EPA ID	MSD990866329	Ferguson, Bruce	NO
GENERAL	WOOD TREATING	MSR22010	LaFleur, Kenny	YES
HAZ. WASTE	TSD		Ferguson, Bruce	YES
WATER	PRE-TREATMENT	MSP090021	Taylor, John	YES
AIR	CONSTRUCTION	168000020	Shanks, Brad	YES
HAZ. WASTE	TSD	MSD990866329	Crawford, Louis	NO

Compliance Actions

MEDIA	ACTIVITY TYPE	SCHEDULED	COMPLETED	INSPECTED B
HAZ WASTE	Compliance (Groundware) Monitori	5/17/00	5/17/00	Twitty, Russ
HAZ WASTE	Financial Record Review	3/1/00	5/11/00	Hamil, Larry
WATER	CMI - PRETREATMENT			Whittington, Darryail
WATER	CEI - PRETREATMENT	9/30/00		Shelton, Kirk
WATER	CEI - NA	6/16/99	6/16/99	Shelton, Kirk
HAZ WASTE	Compliance Evaluation Inspection	6/16/99	6/16/99	Shelton, Kirk
AIR	State Compliance Inspection	6/16/99	6/16/99	Shelton, Kirk

Enforcement Actions

MEDIA	ENFORCEMENT STEP	DETERMINED	RESOLVED	EMPLOYEE ASSIGNE
HAZ. WASTE	AGREED ORDER	6/16/99	5/18/00	Hamil, Larry
HAZ. WASTE	APPARENT VIOLATION	6/16/99	5/18/00	Hamil, Larry
AIR	APPARENT VIOLATION	6/16/99	5/18/00	Hamil, Larry
AIR	AGREED ORDER	6/16/99	5/18/00	Hamil, Larry

KERR-MCGEE CHEMICAL CORP.
COLUMBUS, MISSISSIPPI
120-1680-00020

AIR QUALITY IMPACT REVIEW

AIR QUALITY
MODELING & PLANNING SECTION
SEPTEMBER 17, 1993

2HGRF.ZIP
H1GRF.ZIP
DTA.ZIP
MET.ZIP
SHOW.ZIP
KERR.ZIP

BEE Consulting Services
A Division of BEE Services, Inc.

Air Dispersion Consultants | *BEE-Line Software* | *BEE Training Center*

Number of pages: Cover sheet plus 0 Date: 9-17-93

Sent to: Name: Haidar Al rawi

Fax Number: 601-961-5742

Company/Agency: MS-DEQ

Comments: Files are on SORAM E-Mail

① Sign-on with your name (Haidar Alrawi)

② When it asks if you want to read your mail - say YES !!

③ Go to "enclosed file" and Download.

From: Jeff Sewell

P.O. Box 59916 Dallas, TX 75229
(214) BEE-LINE
(214) BEE-FAXX

PS. Looks like it is almost ~~done~~ finished uploading.
I will send Dibter [illegible] Jeff

D70F3.DTA

MET DATA:
Columbus/ Montgomery
(66-70)

```
-NO ECHO

CO STARTING
CO TITLEONE DEC92 RUNS - 1970 - CASE 3 (65M STACK, EAST+3METERS)
CO TITLETWO FINE GRID 50M - CORRECTED BLDG 5A/5B
CO MODELOPT DFAULT CONC   RURAL
CO AVERTIME  1  8
CO POLLUTID OTHER
CO DCAYCOEF    .000000
CO RUNORNOT RUN
CO ERRORFIL NULL
CO FINISHED


SO STARTING

** Source Location Cards:
**          SRCID SRCTYP        XS            YS            ZS

SO LOCATION   202 POINT     65428.0000    33139.0000        .0000

** Source Parameter Cards:
** POINT:   SRCID       QS            HS         TS          VS         DS
** VOLUME:  SRCID       QS            HS       SYINIT      SZINIT
** AREA:    SRCID       QS            HS        XINIT

SO SRCPARAM   202    803.12400       65.0000   310.9300    18.2880      .7620

SO BUILDHGT 202          .00       .00       .00       .00       .00       .00
SO BUILDHGT 202          .00       .00       .00       .00       .00       .00
SO BUILDHGT 202          .00       .00       .00     24.87       .00       .00
SO BUILDHGT 202          .00       .00       .00       .00       .00       .00
SO BUILDHGT 202          .00       .00       .00       .00     24.87     24.87
SO BUILDHGT 202        24.87     24.87     24.87     24.87       .00       .00
SO BUILDWID 202          .00       .00       .00       .00       .00       .00
SO BUILDWID 202          .00       .00       .00       .00       .00       .00
SO BUILDWID 202          .00       .00       .00     34.48       .00       .00
SO BUILDWID 202          .00       .00       .00       .00       .00       .00
SO BUILDWID 202          .00       .00       .00       .00     50.15     49.80
SO BUILDWID 202        47.93     44.60     39.92     34.48       .00       .00
SO EMISUNIT    .100000E+07 (GRAMS/SEC)          (MICROGRAMS/CUBIC-METER)
SO SRCGROUP ALL
SO FINISHED

RE STARTING
RE GRIDCART CAR STA
RE GRIDCART CAR XYINC   64900.0   21      50.0   32600.0   25      50.0
RE GRIDCART CAR END
RE FINISHED

ME STARTING
ME INPUTFIL CLMBS70.BIN                          UNFORM
ME ANEMHGHT   10.000 METERS
ME SURFDATA  13825  1970            SURFNAME
ME UAIRDATA  13895  1970            UAIRNAME
ME WINDCATS    1.54    3.09    5.14    8.23   10.80
ME FINISHED
```

```
OU STARTING
OU RECTABLE ALLAVE FIRST  SECOND
OU MAXTABLE ALLAVE  50
OU PLOTFILE   1     ALL  FIRST  D70F3.GRF              30
OU PLOTFILE   1     ALL  SECOND D70F3.GRF              30
OU PLOTFILE   8     ALL  FIRST  D70F3.GRF              30
OU PLOTFILE   8     ALL  SECOND D70F3.GRF              30
OU FINISHED
```

D70F3.LST

```
NO ECHO

BEE-Line BEEST-X Version 1.3

 Input File - D70F3.DTA
Output File - d70f3.lst
   Met File - CLMBS70.BIN

************************************
*** SETUP Finishes Successfully ***
************************************
```

*** MODELING OPTIONS USED: CONC RURAL FLAT DFAULT

*** MODEL SETUP OPTIONS SUMMARY ***

- -

**Model Is Setup For Calculation of Average CONCentration Values.

**Model Uses RURAL Dispersion.

**Model Uses Regulatory DEFAULT Options:
1. Final Plume Rise.
2. Stack-tip Downwash.
3. Buoyancy-induced Dispersion.
4. Use Calms Processing Routine.
5. Not Use Missing Data Processing Routine.
6. Default Wind Profile Exponents.
7. Default Vertical Potential Temperature Gradients.
8. "Upper Bound" Values for Supersquat Buildings.
9. No Exponential Decay for RURAL Mode

**Model Uses EPA Intermediate Terrain Policy - COMPLEX-I Regulatory Default Options
1. IOPT(1)=1, Use Terrain Adjustments
2. IOPT(3)=0, Use Gradual Plume Rise
3. IOPT(4)=1, Use BID
4. IOPT(25)=1 Complex Terrain Option
5. ZMIN=10.0 Meters
6. CONTE=0.5 for Stability A thru D, 0 for E & F

**Model Assumes Receptors on FLAT Terrain.

**Model Assumes No FLAGPOLE Receptor Heights.

**Model Calculates 2 Short Term Average(s) of: 1-HR 8-HR

**This Run Includes: 1 Source(s); 1 Source Group(s); and 525 Receptor(s)

**The Model Assumes A Pollutant Type of: OTHER

**Model Set To Continue RUNning After the Setup Testing.

**Output Options Selected:
Model Outputs Tables of Highest Short Term Values by Receptor (RECTABLE Keyword)
Model Outputs Tables of Overall Maximum Short Term Values (MAXTABLE Keyword)
Model Outputs External File(s) of High Values for Plotting (PLOTFILE Keyword)

**NOTE: The Following Flags May Appear Following CONC Values: c for Calm Hours
m for Missing Hours
b for Both Calm and Missing Hours

**Misc. Inputs: Anem. Hgt. (m) = 10.00 ; Decay Coef. = 0.0000 ; Rot. Angle = 0.0
Emission Units = (GRAMS/SEC) ; Emission Rate Unit Factor = 0.10000E+07
Output Units = (MICROGRAMS/CUBIC-METER)

**Input Runstream File: D70F3.DTA ; **Output Print File: d70f3.lst
**Detailed Error/Message File: NULL

*** MODELING OPTIONS USED: CONC RURAL FLAT DFAULT

*** POINT SOURCE DATA ***

SOURCE ID	NUMBER PART. CATS.	EMISSION RATE (USER UNITS)	X (METERS)	Y (METERS)	BASE ELEV. (METERS)	STACK HEIGHT (METERS)	STACK TEMP. (DEG.K)	STACK EXIT VEL. (M/SEC)	STACK DIAMETER (METERS)	BUILDING EXISTS	EMISSION RATE SCALAR VARY BY
202	0	0.80312E+03	65428.0	33139.0	0.0	65.00	310.93	18.29	0.76	YES	

*** MODELING OPTIONS USED: CONC RURAL FLAT DFAULT

*** SOURCE IDs DEFINING SOURCE GROUPS ***

GROUP ID	SOURCE IDs
ALL	202 ,

*** MODELING OPTIONS USED: CONC RURAL FLAT DFAULT

*** DIRECTION SPECIFIC BUILDING DIMENSIONS ***

SOURCE ID: 202

IFV	BH	BW	WAK	IFV	BH	BW	WAK	IFV	BH	BW	WAK	IFV	BH	BW	WAK	IFV	BH	BW	WAK	IFV	BH	BW	WAK
1	0.0,	0.0,	0	2	0.0,	0.0,	0	3	0.0,	0.0,	0	4	0.0,	0.0,	0	5	0.0,	0.0,	0	6	0.0,	0.0,	0
7	0.0,	0.0,	0	8	0.0,	0.0,	0	9	0.0,	0.0,	0	10	0.0,	0.0,	0	11	0.0,	0.0,	0	12	0.0,	0.0,	0
13	0.0,	0.0,	0	14	0.0,	0.0,	0	15	0.0,	0.0,	0	16	24.9,	34.5,	0	17	0.0,	0.0,	0	18	0.0,	0.0,	0
19	0.0,	0.0,	0	20	0.0,	0.0,	0	21	0.0,	0.0,	0	22	0.0,	0.0,	0	23	0.0,	0.0,	0	24	0.0,	0.0,	0
25	0.0,	0.0,	0	26	0.0,	0.0,	0	27	0.0,	0.0,	0	28	0.0,	0.0,	0	29	24.9,	50.1,	0	30	24.9,	49.8,	0
31	24.9,	47.9,	0	32	24.9,	44.6,	0	33	24.9,	39.9,	0	34	24.9,	34.5,	0	35	0.0,	0.0,	0	36	0.0,	0.0,	0

*** MODELING OPTIONS USED: CONC RURAL FLAT DFAULT

*** GRIDDED RECEPTOR NETWORK SUMMARY ***

*** NETWORK ID: CAR ; NETWORK TYPE: GRIDCART ***

*** X-COORDINATES OF GRID ***
(METERS)

64900.0,	64950.0,	65000.0,	65050.0,	65100.0,	65150.0,	65200.0,	65250.0,	65300.0,	65350.0,
65400.0,	65450.0,	65500.0,	65550.0,	65600.0,	65650.0,	65700.0,	65750.0,	65800.0,	65850.0,
65900.0,									

*** Y-COORDINATES OF GRID ***
(METERS)

32600.0,	32650.0,	32700.0,	32750.0,	32800.0,	32850.0,	32900.0,	32950.0,	33000.0,	33050.0,
33100.0,	33150.0,	33200.0,	33250.0,	33300.0,	33350.0,	33400.0,	33450.0,	33500.0,	33550.0,
33600.0,	33650.0,	33700.0,	33750.0,	33800.0,					

*** MODELING OPTIONS USED: CONC RURAL FLAT DFAULT

* SOURCE-RECEPTOR COMBINATIONS LESS THAN 1.0 METER OR 3*ZLB *
IN DISTANCE. CALCULATIONS MAY NOT BE PERFORMED.

SOURCE ID	- - RECEPTOR LOCATION - - XR (METERS)	YR (METERS)	DISTANCE (METERS)
202	65400.0	33150.0	30.08
202	65400.0	33200.0	67.12

*** MODELING OPTIONS USED: CONC RURAL FLAT DFAULT

*** METEOROLOGICAL DAYS SELECTED FOR PROCESSING ***
(1=YES; 0=NO)

```
1 1 1 1 1 1 1 1 1 1   1 1 1 1 1 1 1 1 1 1   1 1 1 1 1 1 1 1 1 1   1 1 1 1 1 1 1 1 1 1   1 1 1 1 1 1 1 1 1 1
1 1 1 1 1 1 1 1 1 1   1 1 1 1 1 1 1 1 1 1   1 1 1 1 1 1 1 1 1 1   1 1 1 1 1 1 1 1 1 1   1 1 1 1 1 1 1 1 1 1
1 1 1 1 1 1 1 1 1 1   1 1 1 1 1 1 1 1 1 1   1 1 1 1 1 1 1 1 1 1   1 1 1 1 1 1 1 1 1 1   1 1 1 1 1 1 1 1 1 1
1 1 1 1 1 1 1 1 1 1   1 1 1 1 1 1 1 1 1 1   1 1 1 1 1 1 1 1 1 1   1 1 1 1 1 1 1 1 1 1   1 1 1 1 1 1 1 1 1 1
1 1 1 1 1 1 1 1 1 1   1 1 1 1 1 1 1 1 1 1   1 1 1 1 1 1 1 1 1 1   1 1 1 1 1 1 1 1 1 1   1 1 1 1 1 1 1 1 1 1
1 1 1 1 1 1 1 1 1 1   1 1 1 1 1 1 1 1 1 1   1 1 1 1 1 1 1 1 1 1   1 1 1 1 1 1 1 1 1 1   1 1 1 1 1 1 1 1 1 1
1 1 1 1 1 1 1 1 1 1   1 1 1 1 1 1 1 1 1 1   1 1 1 1 1 1 1 1 1 1   1 1 1 1 1 1 1 1 1 1   1 1 1 1 1 1 1 1 1 1
1 1 1 1 1 1 1 1 1 1   1 1 1 1 1 1
```

NOTE: METEOROLOGICAL DATA ACTUALLY PROCESSED WILL ALSO DEPEND ON WHAT IS INCLUDED IN THE DATA FILE.

*** UPPER BOUND OF FIRST THROUGH FIFTH WIND SPEED CATEGORIES ***
(METERS/SEC)

1.54, 3.09, 5.14, 8.23, 10.80,

*** WIND PROFILE EXPONENTS ***

STABILITY CATEGORY	WIND SPEED CATEGORY 1	2	3	4	5	6
A	.70000E-01	.70000E-01	.70000E-01	.70000E-01	.70000E-01	.70000E-01
B	.70000E-01	.70000E-01	.70000E-01	.70000E-01	.70000E-01	.70000E-01
C	.10000E+00	.10000E+00	.10000E+00	.10000E+00	.10000E+00	.10000E+00
D	.15000E+00	.15000E+00	.15000E+00	.15000E+00	.15000E+00	.15000E+00
E	.35000E+00	.35000E+00	.35000E+00	.35000E+00	.35000E+00	.35000E+00
F	.55000E+00	.55000E+00	.55000E+00	.55000E+00	.55000E+00	.55000E+00

*** VERTICAL POTENTIAL TEMPERATURE GRADIENTS ***
(DEGREES KELVIN PER METER)

STABILITY CATEGORY	WIND SPEED CATEGORY 1	2	3	4	5	6
A	.00000E+00	.00000E+00	.00000E+00	.00000E+00	.00000E+00	.00000E+00
B	.00000E+00	.00000E+00	.00000E+00	.00000E+00	.00000E+00	.00000E+00
C	.00000E+00	.00000E+00	.00000E+00	.00000E+00	.00000E+00	.00000E+00
D	.00000E+00	.00000E+00	.00000E+00	.00000E+00	.00000E+00	.00000E+00
E	.20000E-01	.20000E-01	.20000E-01	.20000E-01	.20000E-01	.20000E-01
F	.35000E-01	.35000E-01	.35000E-01	.35000E-01	.35000E-01	.35000E-01

*** MODELING OPTIONS USED: CONC RURAL FLAT DFAULT

*** THE FIRST 24 HOURS OF METEOROLOGICAL DATA ***

FILE: CLMBS70.BIN
SURFACE STATION NO.: 13825
NAME: SURFNAME
YEAR: 1970

FORMAT: UNFORM
UPPER AIR STATION NO.: 13895
NAME: UAIRNAME
YEAR: 1970

YEAR	MONTH	DAY	HOUR	FLOW VECTOR	SPEED (M/S)	TEMP (K)	STAB CLASS	MIXING HEIGHT (M) RURAL	MIXING HEIGHT (M) URBAN
70	1	1	1	118.0	4.60	275.0	4	951.0	951.0
70	1	1	2	118.0	4.60	275.0	4	951.0	951.0
70	1	1	3	124.0	4.60	275.0	4	951.0	951.0
70	1	1	4	143.0	4.60	275.0	4	951.0	951.0
70	1	1	5	133.0	5.10	275.0	4	951.0	951.0
70	1	1	6	142.0	4.10	273.0	4	951.0	951.0
70	1	1	7	125.0	2.10	273.0	5	951.0	951.0
70	1	1	8	123.0	1.50	273.0	4	130.0	951.0
70	1	1	9	137.0	2.60	273.0	3	267.0	951.0
70	1	1	10	151.0	3.60	274.0	3	404.0	951.0
70	1	1	11	184.0	2.60	275.0	3	540.0	951.0
70	1	1	12	146.0	3.10	276.0	3	677.0	951.0
70	1	1	13	123.0	2.60	278.0	3	814.0	951.0
70	1	1	14	159.0	4.10	278.0	3	951.0	951.0
70	1	1	15	152.0	2.60	278.0	3	951.0	951.0
70	1	1	16	224.0	2.10	278.0	4	951.0	951.0
70	1	1	17	291.0	1.00	276.0	5	951.0	934.0
70	1	1	18	287.0	1.00	276.0	6	948.0	820.0
70	1	1	19	294.0	1.00	274.0	7	944.0	706.0
70	1	1	20	287.0	1.00	273.0	7	941.0	591.0
70	1	1	21	300.0	1.00	272.0	7	938.0	477.0
70	1	1	22	302.0	1.00	273.0	7	935.0	363.0
70	1	1	23	320.0	1.00	272.0	7	932.0	248.0
70	1	1	24	320.0	1.00	272.0	7	929.0	134.0

*** NOTES: STABILITY CLASS 1=A, 2=B, 3=C, 4=D, 5=E AND 6=F.
FLOW VECTOR IS DIRECTION TOWARD WHICH WIND IS BLOWING.

*** MODELING OPTIONS USED: CONC RURAL FLAT DFAULT

*** THE 1ST HIGHEST 1-HR AVERAGE CONCENTRATION VALUES FOR SOURCE GROUP: ALL ***
INCLUDING SOURCE(S): 202 ,

*** NETWORK ID: CAR ; NETWORK TYPE: GRIDCART ***

** CONC OF OTHER IN (MICROGRAMS/CUBIC-METER) **

Y-COORD (METERS)	X-COORD (METERS) 64900.00	64950.00	65000.00	65050.00	65100.00
33800.0	9776.75391 (70052116)	10100.31540 (70020615)	10090.99410 (70092509)	10347.28320 (70092509)	10498.45510 (70072515)
33750.0	10116.11520 (70072412)	10311.24410 (70052116)	10498.29300 (70020615)	10523.82710 (70092509)	10466.43850 (70072515)
33700.0	10304.28520 (70072412)	10371.30570 (70072412)	10558.85840 (70052116)	10461.89260 (70020615)	10382.83110 (70092509)
33650.0	10266.45800 (70041516)	10491.11130 (70072412)	10237.37700 (70072412)	10297.86130 (70052116)	9865.13184 (70092509)
33600.0	10517.62500 (70041516)	10249.02340 (70041516)	10213.21780 (70072412)	9575.35449 (70052116)	9784.54492 (70042112)
33550.0	10453.83400 (70062413)	10168.10160 (70041516)	9657.32520 (70041516)	10063.00680 (70081413)	11069.08790 (70060912)
33500.0	10319.05470 (70082711)	9933.91699 (70081711)	10024.66990 (70083011)	11162.62600 (70082012)	12040.87700 (70081413)
33450.0	10082.14260 (70072715)	9596.94922 (70072713)	10948.84380 (70072410)	11995.92580 (70083011)	12599.67090 (70082012)
33400.0	9757.20410 (70050713)	10451.08300 (70041512)	11677.41020 (70041512)	12524.15920 (70072713)	12550.12890 (70083011)
33350.0	9749.94336 (70071810)	11170.25000 (70022112)	12249.64160 (70062112)	12673.26460 (70041512)	11945.35350 (70072713)
33300.0	10248.34570 (70052211)	11442.09670 (70052211)	12486.10550 (70071810)	12494.15330 (70022112)	11375.16410 (70062112)
33250.0	10168.37600 (70052211)	11694.94730 (70052211)	12602.10350 (70052211)	12196.72460 (70052211)	10252.11520 (70052211)
33200.0	10283.81740 (70063016)	11243.73540 (70063016)	11403.21580 (70063016)	10424.66310 (70052211)	9121.39258 (70052111)
33150.0	10987.26660 (70063016)	12218.27250 (70063016)	12678.54490 (70063016)	11813.41500 (70063016)	9352.69336 (70063016)
33100.0	10735.36520 (70072912)	12020.77340 (70072912)	12577.14650 (70072912)	11828.67290 (70072912)	9497.13672 (70072912)
33050.0	10611.25980 (70041513)	12003.81450 (70041513)	12692.95310 (70041513)	12081.81930 (70071610)	10088.31350 (70052310)
33000.0	10417.09280 (70052310)	11820.32710 (70052310)	12485.89450 (70052310)	12088.20900 (70071214)	10982.30660 (70071214)
32950.0	9698.80957 (70071214)	11345.52440 (70071214)	12385.96680 (70071214)	12652.50780 (70081512)	11532.83200 (70081512)
32900.0	9627.98242 (70052209)	10812.53030 (70081512)	11831.99610 (70081512)	11673.10740 (70081512)	10803.87500 (70040712)
32850.0	9960.33594 (70032715)	9595.75488 (70081512)	9871.39453 (70081512)	11233.43160 (70040712)	12600.97560 (70040712)
32800.0	9614.06445 (70040510)	9715.02832 (70040510)	9859.49902 (70040712)	11537.20900 (70040712)	12049.56050 (70040712)
32750.0	10439.10740 (70040510)	9661.60449 (70061417)	9610.65039 (70061417)	10342.47750 (70040712)	10113.41500 (70040712)
32700.0	10237.66600 (70061417)	10394.90630 (70011415)	9926.15527 (70040409)	9464.50293 (70071117)	8936.19922 (70040710)
32650.0	10554.52150 (70011415)	10376.80570 (70040409)	10121.59570 (70071117)	10148.59080 (70040710)	9780.92480 (70091110)
32600.0	10312.37110 (70040409)	10151.13770 (70071117)	10540.37300 (70040710)	10391.14160 (70091110)	9852.92578 (70091110)

*** MODELING OPTIONS USED: CONC RURAL FLAT DFAULT

*** THE 1ST HIGHEST 1-HR AVERAGE CONCENTRATION VALUES FOR SOURCE GROUP: ALL ***
INCLUDING SOURCE(S): 202 ,

*** NETWORK ID: CAR ; NETWORK TYPE: GRIDCART ***

** CONC OF OTHER IN (MICROGRAMS/CUBIC-METER) **

Y-COORD (METERS)	X-COORD (METERS) 65150.00	65200.00	65250.00	65300.00	65350.00
33800.0	10356.73830 (70042914)	10564.53520 (70060908)	10546.14940 (70072313)	10517.53710 (70090811)	10457.16500 (70072714)
33750.0	10493.38960 (70061008)	10407.35550 (70042914)	10284.97360 (70072615)	10174.07320 (70090811)	10035.87010 (70072714)
33700.0	10208.02830 (70072515)	9939.16016 (70042914)	9757.60156 (70072615)	9491.05078 (70081517)	9797.95313 (70050511)
33650.0	9536.85156 (70072515)	10036.47660 (70072414)	10385.81540 (70063010)	10283.32130 (70082211)	11326.39160 (70082211)
33600.0	10674.46000 (70050711)	11398.89060 (70052412)	11877.78320 (70063010)	10854.87790 (70063010)	12402.01950 (70082211)
33550.0	11858.42770 (70042112)	12339.79880 (70083112)	12631.91700 (70072414)	11913.89260 (70063010)	12511.93160 (70082211)
33500.0	12559.80570 (70062813)	12681.37890 (70050711)	12362.45510 (70052412)	11742.68950 (70063010)	11186.51070 (70082211)
33450.0	12608.12700 (70081413)	12000.07810 (70062813)	10975.02150 (70083112)	9886.30273 (70063010)	8134.56201 (70082211)
33400.0	11885.35940 (70082012)	10469.51460 (70081413)	8444.54883 (70042112)	6875.13818 (70051412)	5056.08643 (70061711)
33350.0	10622.30370 (70072410)	8042.98340 (70041511)	5826.38184 (70082712)	4083.98364 (70082913)	2833.46777 (70061711)
33300.0	8854.20703 (70041512)	6287.13721 (70062810)	3788.01050 (70062912)	1813.26282 (70082712)	768.39240 (70081513)
33250.0	7443.10938 (70060810)	4532.06250 (70052413)	2055.14966 (70062913)	431.00159 (70062913)	28.14727 (70081513)
33200.0	6326.98633 (70052110)	3510.97437 (70052110)	891.92938 (70052110)	50.98635 (70052413)	0.05835 (70062913)
33150.0	5887.33691 (70070611)	3070.81274 (70070614)	736.39972 (70070614)	15.23285 (70070614)	0.00013 (70063016)
33100.0	6235.31445 (70051911)	3270.72119 (70033112)	789.33136 (70052210)	20.03097 (70052210)	0.00183 (70051812)
33050.0	6434.28906 (70052310)	3307.28735 (70051812)	1550.77087 (70051812)	188.55496 (70051812)	2.55052 (70082513)
33000.0	8034.28711 (70081512)	5437.41748 (70060814)	2805.30933 (70062411)	1038.95532 (70082513)	254.06462 (70062811)
32950.0	9252.71387 (70060814)	6727.56738 (70062411)	4943.80518 (70082513)	2537.53784 (70082513)	1807.56519 (70062811)
32900.0	11245.82810 (70040712)	9180.52344 (70040712)	6360.82764 (70082513)	5129.46289 (70062811)	4435.19434 (70070612)
32850.0	11985.36040 (70040712)	9155.84277 (70040712)	9162.65723 (70092912)	8343.53516 (70092912)	7527.12549 (70082512)
32800.0	10723.89550 (70040712)	10382.22750 (70092912)	11850.11820 (70092912)	10352.48630 (70092912)	10528.58590 (70071114)
32750.0	9421.41992 (70092912)	11950.71780 (70092912)	12615.12210 (70092912)	12133.83980 (70071814)	12188.97170 (70080313)
32700.0	10051.95610 (70092912)	11823.21290 (70092912)	11788.50200 (70092912)	12498.24800 (70071814)	12657.97170 (70080313)
32650.0	9588.97656 (70092912)	10632.25100 (70092912)	10472.84770 (70071814)	11632.02150 (70071814)	11852.17290 (70080313)
32600.0	10018.24320 (70091010)	9662.25684 (70121415)	9495.06738 (70071814)	10200.31050 (70071114)	10414.73140 (70080313)

*** MODELING OPTIONS USED: CONC RURAL FLAT DFAULT

*** THE 1ST HIGHEST 1-HR AVERAGE CONCENTRATION VALUES FOR SOURCE GROUP: ALL ***
INCLUDING SOURCE(S): 202 ,

*** NETWORK ID: CAR ; NETWORK TYPE: GRIDCART ***

** CONC OF OTHER IN (MICROGRAMS/CUBIC-METER) **

Y-COORD (METERS)	X-COORD (METERS) 65400.00	65450.00	65500.00	65550.00	65600.00
33800.0	10348.61910 (70050715)	10205.58400 (70022211)	10396.40230 (70061409)	10383.49710 (70070716)	10522.05470 (70071317)
33750.0	9973.06738 (70030912)	9862.54883 (70022211)	9950.19824 (70061409)	10031.31350 (70081617)	10129.25390 (70071317)
33700.0	9968.43262 (70072411)	9975.75977 (70073113)	9550.55176 (70061612)	9511.38867 (70081617)	9238.12012 (70071317)
33650.0	11470.26950 (70072411)	11471.81050 (70073113)	10852.54200 (70061612)	9437.27734 (70072712)	10504.44040 (70072712)
33600.0	12488.95020 (70072411)	12482.34770 (70073113)	11619.53520 (70061612)	11001.09960 (70072712)	11941.39750 (70072712)
33550.0	12541.93850 (70082611)	12505.04980 (70061612)	11384.07710 (70061612)	11983.06930 (70072712)	12555.71090 (70072712)
33500.0	11235.31450 (70082611)	11215.42190 (70061612)	9816.06836 (70061612)	11714.79590 (70072712)	11870.64650 (70090812)
33450.0	8137.55371 (70051510)	8292.95313 (70051313)	7667.76514 (70060910)	9742.44824 (70072712)	10942.59960 (70090812)
33400.0	5123.28076 (70081511)	5108.05127 (70071111)	5614.69043 (70062412)	6696.26660 (70061411)	8289.20215 (70071313)
33350.0	2263.48926 (70071310)	2214.28467 (70070711)	2815.73462 (70060411)	3897.93359 (70073013)	5793.75391 (70080211)
33300.0	350.83841 (70042913)	314.25894 (70070711)	632.70306 (70061713)	1725.26697 (70071410)	3449.98462 (70052212)
33250.0	1.78772 (70042913)	1.28356 (70061714)	25.55857 (70070710)	373.21231 (70052212)	1705.51709 (70071112)
33200.0	0.00000 (70072414)	0.00000 (70072712)	0.01567 (70052212)	39.62968 (70050712)	836.24500 (70050712)
33150.0	0.00000 (0)	0.00000 (0)	0.00003 (70091214)	6.95888 (70062010)	532.26233 (70062010)
33100.0	0.00000 (70092912)	0.00000 (70070913)	0.00034 (70061613)	14.01899 (70050513)	689.78198 (70050513)
33050.0	0.01306 (70081312)	0.00799 (70091012)	1.94840 (70090612)	130.27711 (70061914)	1333.94470 (70052513)
33000.0	69.30463 (70082412)	61.73355 (70062213)	223.85013 (70070210)	987.32861 (70071812)	2640.64746 (70061914)
32950.0	1204.19495 (70082412)	1198.29626 (70062213)	1737.42432 (70071613)	2917.11963 (70082511)	4638.85205 (70080712)
32900.0	3791.45166 (70073111)	3682.42407 (70062213)	4338.87012 (70080513)	5139.83691 (70070210)	6756.76514 (70080112)
32850.0	6892.72607 (70081313)	6762.25049 (70061413)	7273.22559 (70062210)	7424.23340 (70062812)	7854.83838 (70070211)
32800.0	9436.96289 (70081313)	10097.27250 (70062515)	9733.82715 (70062812)	10911.01170 (70062812)	8883.86816 (70062812)
32750.0	10960.61720 (70080313)	12092.28320 (70062515)	10825.04980 (70062515)	12464.98540 (70062812)	11064.14940 (70062812)
32700.0	11301.18070 (70080313)	12642.95310 (70062515)	11682.92770 (70062515)	12496.00390 (70062812)	11695.05180 (70062812)
32650.0	10558.10640 (70080313)	11938.09960 (70062515)	11277.06350 (70062515)	11384.19920 (70062812)	11112.42970 (70062812)
32600.0	9299.81738 (70062515)	10583.29300 (70062515)	10156.66700 (70062515)	9753.42090 (70062812)	9826.94629 (70062812)

*** MODELING OPTIONS USED: CONC RURAL FLAT DFAULT

*** THE 1ST HIGHEST 1-HR AVERAGE CONCENTRATION VALUES FOR SOURCE GROUP: ALL ***
INCLUDING SOURCE(S): 202 ,

*** NETWORK ID: CAR ; NETWORK TYPE: GRIDCART ***

** CONC OF OTHER IN (MICROGRAMS/CUBIC-METER) **

Y-COORD (METERS)	X-COORD (METERS) 65650.00	65700.00	65750.00	65800.00	65850.00
33800.0	9336.45313 (70071317)	9766.40430 (70073110)	10528.18950 (70073110)	10445.46480 (70042413)	10315.67580 (70072914)
33750.0	8812.35742 (70061016)	10257.50980 (70073110)	10465.72270 (70042413)	10554.51460 (70060916)	10500.23140 (70031815)
33700.0	8910.67871 (70073110)	10206.59380 (70073110)	10348.65630 (70042413)	10504.56050 (70091210)	10509.34180 (70060909)
33650.0	9941.56738 (70072712)	9570.46777 (70042413)	9989.49023 (70072914)	10284.55180 (70060909)	10114.92970 (70071909)
33600.0	11132.36910 (70090812)	10783.91310 (70073012)	9319.20117 (70031815)	9363.94824 (70060909)	10208.83300 (70071909)
33550.0	12407.66410 (70090812)	11529.94430 (70073012)	10919.32320 (70073011)	10163.38090 (70073011)	9782.64453 (70071508)
33500.0	12575.71580 (70073012)	12048.07710 (70073011)	12107.33980 (70073011)	10567.44430 (70073011)	9049.90918 (70062115)
33450.0	10928.81150 (70073011)	12558.81050 (70073011)	11777.14260 (70073011)	10969.27930 (70071912)	10946.24800 (70071912)
33400.0	10260.93650 (70073011)	10891.49120 (70073011)	11687.91410 (70071912)	12545.95410 (70071912)	11840.60250 (70061614)
33350.0	7698.31934 (70060813)	9925.35840 (70071912)	11983.50590 (70071912)	12612.00200 (70061614)	11678.42480 (70061614)
33300.0	5810.69678 (70071112)	8473.15430 (70080412)	10523.07420 (70061614)	12354.97170 (70071113)	12584.74220 (70090611)
33250.0	4184.03711 (70070712)	7130.07324 (70071914)	10123.35060 (70090611)	11686.46580 (70090611)	12427.90040 (70091214)
33200.0	2905.05737 (70072711)	6141.93457 (70060811)	9275.29199 (70091214)	11535.91990 (70091214)	12172.45610 (70091214)
[illegible]150.0	2737.12769 (70070910)	5810.54590 (70052512)	8790.35254 (70052512)	10569.91310 (70090112)	11598.29000 (70090112)
[illegible]00.0	2916.71973 (70090711)	5701.05176 (70090711)	8850.29492 (70090112)	11554.70410 (70090112)	12607.87600 (70090112)
33050.0	3485.63452 (70052513)	6740.22656 (70080411)	9572.45898 (70091213)	11932.61130 (70091213)	12666.55370 (70072413)
33000.0	5108.52246 (70080611)	7570.25732 (70070310)	9384.57910 (70061613)	10412.58890 (70091213)	11715.18750 (70091213)
32950.0	7058.48779 (70080113)	8914.72266 (70061613)	11660.35450 (70061613)	12273.00200 (70061613)	11322.89260 (70061613)
32900.0	9191.53418 (70070913)	10798.41310 (70081411)	10865.53320 (70061613)	12414.55180 (70061613)	12092.87110 (70061613)
32850.0	10690.00490 (70070913)	12197.90140 (70070913)	12355.38570 (70081411)	10682.48140 (70081411)	10871.85060 (70061613)
32800.0	9891.21387 (70070913)	12318.59960 (70070913)	12338.99410 (70081411)	11461.54000 (70081411)	9519.70020 (70081411)
32750.0	8130.32861 (70070913)	10682.46290 (70070913)	11464.49900 (70070913)	10653.26170 (70081411)	9513.04004 (70042417)
32700.0	9069.47266 (70062812)	8427.75195 (70070913)	9587.88574 (70070913)	9534.93555 (70102512)	9849.78711 (70071209)
32650.0	9203.38281 (70062812)	8181.52686 (70101015)	9345.28320 (70022214)	10021.31640 (70022214)	10384.51860 (70102512)
32600.0	9544.33203 (70091114)	9549.50000 (70091114)	8810.83105 (70101015)	10322.73240 (70022214)	10286.24410 (70022214)

*** MODELING OPTIONS USED: CONC RURAL FLAT DFAULT

*** THE 1ST HIGHEST 1-HR AVERAGE CONCENTRATION VALUES FOR SOURCE GROUP: ALL ***
INCLUDING SOURCE(S): 202 ,

*** NETWORK ID: CAR ; NETWORK TYPE: GRIDCART ***

** CONC OF OTHER IN (MICROGRAMS/CUBIC-METER) **

Y-COORD (METERS)	X-COORD (METERS) 65900.00
33800.0	10156.01560 (70060909)
33750.0	10220.11820 (70060909)
33700.0	10303.97560 (70071909)
33650.0	10529.10550 (70071909)
33600.0	10458.03610 (70071508)
33550.0	9982.38867 (70062115)
33500.0	9717.33398 (70062115)
33450.0	9846.50977 (70071912)
33400.0	10542.87010 (70061614)
33350.0	11190.38670 (70071113)
33300.0	11756.15630 (70090611)
33250.0	12050.98540 (70091214)
33200.0	11551.34960 (70091214)
33150.0	11385.21090 (70090112)
33100.0	12297.37890 (70090112)
33050.0	12189.26070 (70072413)
33000.0	11566.81350 (70091213)
32950.0	9566.06348 (70061613)
32900.0	10681.17290 (70061613)
32850.0	10167.19920 (70061613)
32800.0	9502.21387 (70062513)
32750.0	9720.74609 (70042417)
32700.0	10326.54300 (70042417)
32650.0	10293.44920 (70071209)
32600.0	10557.75780 (70102512)

*** MODELING OPTIONS USED: CONC RURAL FLAT DFAULT

*** THE 2ND HIGHEST 1-HR AVERAGE CONCENTRATION VALUES FOR SOURCE GROUP: ALL ***
INCLUDING SOURCE(S): 202 ,

*** NETWORK ID: CAR ; NETWORK TYPE: GRIDCART ***

** CONC OF OTHER IN (MICROGRAMS/CUBIC-METER) **

Y-COORD (METERS)	X-COORD (METERS) 64900.00	64950.00	65000.00	65050.00	65100.00
33800.0	9266.79297 (70072412)	10069.31350 (70052116)	10053.85640 (70020615)	9976.39160 (70072515)	10401.19630 (70061008)
33750.0	9335.11523 (70052116)	9819.95117 (70020615)	10253.85250 (70052116)	9914.26074 (70020615)	10091.35160 (70092509)
33700.0	9093.60840 (70041516)	9810.84766 (70052116)	10229.04100 (70020615)	9993.19824 (70092509)	9761.38184 (70072515)
33650.0	9600.71582 (70072412)	9156.71484 (70041516)	9970.43652 (70052116)	10180.10550 (70020615)	9725.85352 (70020615)
33600.0	9697.14063 (70081711)	9524.02051 (70072412)	8813.32910 (70052315)	9492.06738 (70072412)	9773.44727 (70062813)
33550.0	10453.83400 (70091414)	9764.05762 (70081711)	8977.24121 (70082012)	9756.22559 (70082012)	10996.48930 (70062813)
33500.0	10182.29690 (70092011)	9927.18359 (70062413)	10005.05470 (70071710)	10944.30960 (70071710)	11688.82230 (70060912)
33450.0	10082.14260 (70072812)	9596.94922 (70100111)	10948.41600 (70072713)	11925.11230 (70071710)	12392.11910 (70071710)
33400.0	9379.12500 (70091311)	10427.52250 (70070714)	11314.54100 (70072713)	12524.15920 (70100111)	12547.87210 (70072410)
33350.0	9619.34180 (70022112)	11127.93550 (70052311)	12249.64160 (70072513)	12528.33890 (70070714)	11945.35350 (70100111)
33300.0	9572.59668 (70071810)	11294.57230 (70071810)	12152.89650 (70022112)	12483.95900 (70071810)	11375.16410 (70072513)
33250.0	8816.78125 (70051908)	9545.44727 (70071810)	10803.22360 (70071810)	11127.77540 (70071810)	10141.16600 (70071810)
33200.0	8608.58301 (70121412)	9787.03320 (70052211)	10605.23340 (70052211)	10281.52930 (70063016)	8876.35840 (70052211)
[illegible]450.0	9111.36426 (70072912)	10043.91500 (70072912)	10299.61620 (70072912)	9468.83691 (70072912)	8145.35156 (70052111)
[illegible]00.0	9840.84570 (70063016)	10761.98830 (70063016)	11109.37790 (70041513)	10643.42290 (70041513)	9082.37891 (70051911)
33050.0	10591.25000 (70072912)	11872.67580 (70071610)	12638.55370 (70071610)	12029.60350 (70041513)	9965.37793 (70071610)
33000.0	10374.04790 (70071610)	11483.62700 (70071610)	11761.85550 (70071610)	11750.86520 (70052310)	10465.78220 (70081512)
32950.0	9625.43359 (70052310)	10506.00390 (70081512)	12061.61230 (70081512)	12204.24410 (70071214)	10265.69630 (70071214)
32900.0	9611.65039 (70102515)	10442.46780 (70071214)	10763.62300 (70071214)	9865.62695 (70060814)	9812.75977 (70060814)
32850.0	9937.84570 (70063017)	8997.24316 (70032715)	9031.60742 (70040712)	8995.91309 (70081512)	7812.26270 (70060814)
32800.0	9612.82617 (70071115)	9714.71191 (70071115)	8679.50586 (70040510)	7949.28467 (70061417)	7098.76318 (70082513)
32750.0	10436.00290 (70071115)	9568.62207 (70040510)	9584.66113 (70011415)	8716.85352 (70040409)	7923.07568 (70071117)
32700.0	9909.24707 (70011415)	10387.03030 (70061417)	9926.15527 (70062016)	9221.88086 (70040710)	8758.07129 (70071117)
32650.0	10516.58110 (70061417)	10376.80570 (70062016)	9806.07813 (70040710)	10054.72560 (70071117)	8847.75879 (70040710)
32600.0	10312.37110 (70062016)	9787.52930 (70040710)	10534.38380 (70071117)	9933.33301 (70040710)	9209.00879 (70091010)

*** MODELING OPTIONS USED: CONC RURAL FLAT DFAULT

*** THE 2ND HIGHEST 1-HR AVERAGE CONCENTRATION VALUES FOR SOURCE GROUP: ALL ***
INCLUDING SOURCE(S): 202 ,

*** NETWORK ID: CAR ; NETWORK TYPE: GRIDCART ***

** CONC OF OTHER IN (MICROGRAMS/CUBIC-METER) **

Y-COORD (METERS)	X-COORD (METERS) 65150.00	65200.00	65250.00	65300.00	65350.00
33800.0	10263.99120 (70061008)	10325.30960 (70042914)	10546.14940 (70120915)	10460.83980 (70070717)	10457.16500 (70083009)
33750.0	10493.38960 (70071815)	10294.78420 (70060908)	10226.82620 (70072313)	10016.87400 (70070717)	10035.87010 (70083009)
33700.0	10122.37400 (70061008)	9537.91016 (70061008)	9668.01074 (70060908)	9374.94922 (70090811)	9797.95313 (70072613)
33650.0	9338.00098 (70092509)	9930.92285 (70052412)	9955.30762 (70072414)	9603.33203 (70050511)	11241.04100 (70050511)
33600.0	10450.48050 (70042112)	11312.26270 (70083112)	11628.41410 (70072414)	10840.59670 (70082211)	12179.50780 (70050511)
33550.0	11716.23830 (70050711)	12069.46880 (70050711)	12572.25780 (70063010)	11151.55270 (70072414)	12120.81350 (70050511)
33500.0	12502.95310 (70060912)	12576.44140 (70042112)	12254.22850 (70083112)	11276.39750 (70072414)	10647.65720 (70050511)
33450.0	12328.68750 (70060912)	11845.48140 (70042112)	10919.34080 (70050711)	9811.70215 (70072414)	7541.54297 (70050511)
33400.0	11742.59380 (70071710)	10350.52440 (70060912)	8439.73730 (70063013)	6423.37158 (70061711)	4686.87549 (70042913)
33350.0	10472.01370 (70072713)	8042.98340 (70072611)	5773.99365 (70063013)	3893.02271 (70051412)	2537.49194 (70081513)
33300.0	8600.81641 (70070714)	6203.87988 (70071312)	3675.37402 (70060911)	1696.35669 (70082913)	660.02612 (70061711)
33250.0	7161.15479 (70063012)	4438.11963 (70063012)	1931.63696 (70052413)	416.45352 (70062912)	27.53430 (70082913)
33200.0	6287.41602 (70052111)	2772.56958 (70052111)	752.47736 (70052413)	46.91012 (70062913)	0.03847 (70060911)
33150.0	5637.66064 (70052111)	3047.14771 (70070611)	657.02637 (70070611)	12.17401 (70071212)	0.00011 (70052211)
33100.0	6127.12256 (70033112)	3222.24316 (70052210)	758.40991 (70033112)	16.73794 (70033112)	0.00124 (70081512)
33050.0	6051.44531 (70071610)	3216.99927 (70042111)	1420.17590 (70042111)	168.39876 (70070613)	2.01538 (70062411)
33000.0	7726.73535 (70071214)	5403.12061 (70070613)	2633.59985 (70070613)	940.73859 (70062411)	134.08580 (70081312)
32950.0	8436.71191 (70081512)	6595.36768 (70040712)	4641.16748 (70062411)	2388.43677 (70062811)	1611.56128 (70081312)
32900.0	8346.49707 (70062411)	7911.06152 (70082513)	4975.32910 (70040712)	4888.64941 (70071813)	4233.91650 (70081312)
32850.0	8177.50000 (70082513)	8070.14453 (70082513)	6798.18457 (70071813)	8312.76758 (70071813)	7074.34424 (70071814)
32800.0	7649.10352 (70082513)	7479.41699 (70040712)	9033.24609 (70071813)	10227.60450 (70071814)	10432.35640 (70071814)
32750.0	8380.54395 (70040712)	7649.93555 (70071813)	9785.39063 (70071813)	11873.80960 (70071114)	12004.27250 (70071114)
32700.0	8166.12451 (70091110)	7904.48877 (70071813)	10682.16310 (70071814)	12374.64650 (70071114)	12114.77150 (70071114)
32650.0	8958.86035 (70091010)	8766.90723 (70121415)	10154.52440 (70092912)	11621.06640 (70071114)	11092.59860 (70071114)
32600.0	9927.15234 (70090110)	9206.92383 (70090110)	9297.62305 (70071114)	10136.03320 (70071814)	9574.89160 (70071114)

*** MODELING OPTIONS USED: CONC RURAL FLAT DFAULT

*** THE 2ND HIGHEST 1-HR AVERAGE CONCENTRATION VALUES FOR SOURCE GROUP: ALL ***
INCLUDING SOURCE(S): 202 ,

*** NETWORK ID: CAR ; NETWORK TYPE: GRIDCART ***

** CONC OF OTHER IN (MICROGRAMS/CUBIC-METER) **

Y-COORD (METERS)	X-COORD (METERS) 65400.00	65450.00	65500.00	65550.00	65600.00
33800.0	10348.61910 (70062109)	9964.49707 (70050715)	10188.61620 (70022211)	10121.37790 (70081617)	10388.28420 (70081617)
33750.0	9929.91406 (70050715)	9585.45215 (70061409)	9821.13867 (70070716)	9895.23633 (70070716)	9868.84766 (70081617)
33700.0	9933.02930 (70082611)	9892.76660 (70061612)	9229.91016 (70070716)	9376.24707 (70071317)	8863.22754 (70081617)
33650.0	11447.02640 (70082611)	11403.54880 (70061612)	10256.06640 (70073113)	8622.21094 (70061612)	8369.53613 (70061016)
33600.0	12487.23730 (70082611)	12444.63670 (70061612)	10864.07520 (70073113)	8748.31543 (70061612)	9710.97461 (70090812)
33550.0	12513.11620 (70072411)	12495.77830 (70073113)	10491.71680 (70073113)	9318.11914 (70061411)	11304.30960 (70090812)
33500.0	11173.71970 (70072411)	11151.31450 (70073113)	8885.89551 (70073113)	9938.47168 (70061411)	11612.08400 (70072712)
33450.0	8122.96191 (70082611)	8190.27441 (70071314)	7496.22266 (70062412)	9300.92969 (70061411)	10906.77440 (70073012)
33400.0	4754.90039 (70071310)	5086.91748 (70080311)	5586.33984 (70060910)	6478.09473 (70070911)	8168.70703 (70051312)
33350.0	2235.45508 (70042913)	2164.30151 (70080311)	2809.72437 (70071413)	3894.12866 (70070710)	5690.35205 (70071311)
33300.0	349.86447 (70071310)	278.04288 (70072014)	628.39874 (70060411)	1699.14038 (70081613)	3366.21680 (70071911)
33250.0	1.70114 (70071310)	1.19875 (70071413)	25.53018 (70081613)	294.70718 (70071911)	1678.73218 (70070712)
33200.0	0.00000 (70083112)	0.00000 (70090812)	0.01011 (70071112)	29.23919 (70070712)	793.00757 (70072711)
[illegible]150.0	0.00000 (0)	0.00000 (0)	0.00002 (70090611)	6.95888 (70080111)	532.26233 (70080111)
[illegible]100.0	0.00000 (70040712)	0.00000 (70062812)	0.00024 (70052513)	11.25461 (70052513)	595.35223 (70090711)
33050.0	0.01021 (70082412)	0.00794 (70071010)	1.91716 (70071812)	110.37124 (70080611)	1225.04919 (70090712)
33000.0	63.34951 (70081312)	60.41068 (70091012)	207.29347 (70082511)	982.05536 (70090612)	2378.55981 (70061412)
32950.0	1081.15076 (70073111)	1086.74426 (70091012)	1691.35474 (70071012)	2888.22388 (70070211)	4610.88818 (70061412)
32900.0	3542.00366 (70082412)	3420.07593 (70072913)	4186.89600 (70071010)	4793.04736 (70082511)	6708.12402 (70070211)
32850.0	6589.04004 (70073111)	6330.47656 (70062515)	6765.84473 (70062812)	6793.47021 (70080513)	7689.19824 (70080112)
32800.0	9311.04297 (70080313)	10097.27250 (70072514)	9679.74023 (70062210)	8182.69531 (70080513)	7278.45801 (70070211)
32750.0	10251.93850 (70081313)	12092.28320 (70072514)	10825.04980 (70072514)	9148.68262 (70062210)	7019.89502 (70080513)
32700.0	10719.84960 (70062515)	12642.95310 (70072514)	11682.92770 (70072514)	9177.81738 (70062210)	7094.97949 (70121714)
32650.0	10326.23630 (70062515)	11938.09960 (70072514)	11277.06350 (70072514)	8769.18066 (70062515)	7771.43555 (70121714)
32600.0	9299.81738 (70072514)	10583.29300 (70072514)	10156.66700 (70072514)	9088.13379 (70070617)	8501.34082 (70080610)

*** MODELING OPTIONS USED: CONC RURAL FLAT DFAULT

*** THE 2ND HIGHEST 1-HR AVERAGE CONCENTRATION VALUES FOR SOURCE GROUP: ALL ***
INCLUDING SOURCE(S): 202 ,

*** NETWORK ID: CAR ; NETWORK TYPE: GRIDCART ***

** CONC OF OTHER IN (MICROGRAMS/CUBIC-METER) **

Y-COORD (METERS)	X-COORD (METERS) 65650.00	65700.00	65750.00	65800.00	65850.00
33800.0	8789.65039 (70081617)	8600.06543 (70090815)	9969.52539 (70042413)	10289.62400 (70060916)	10206.29200 (70091210)
33750.0	8805.80664 (70082212)	9059.79199 (70042413)	10358.99710 (70073110)	10533.86720 (70072914)	10500.23140 (70092514)
33700.0	8832.77832 (70090815)	9637.71387 (70042413)	10313.47560 (70060916)	10504.56050 (70092209)	10330.49510 (70031815)
33650.0	9290.69727 (70090812)	9403.14551 (70090812)	9906.39844 (70060916)	10218.11820 (70031815)	9728.48340 (70060909)
33600.0	10898.37700 (70073012)	10721.74510 (70090812)	9319.20117 (70092514)	9299.55469 (70071909)	9503.26953 (70071508)
33550.0	12329.19630 (70073012)	11272.63960 (70090812)	9304.25977 (70073012)	9153.91504 (70071909)	9012.87988 (70071909)
33500.0	12425.41310 (70090812)	10961.79390 (70073012)	9086.10352 (70060813)	8427.57324 (70071912)	9022.93750 (70071912)
33450.0	10914.53610 (70073012)	10167.60060 (70060813)	9617.56836 (70060813)	9656.34375 (70061614)	10254.11520 (70061614)
33400.0	9439.13965 (70080211)	9937.00586 (70060813)	10415.72950 (70061614)	12011.65040 (70061614)	11689.20700 (70071912)
33350.0	6996.59619 (70071911)	9016.32227 (70061614)	11831.09180 (70061614)	11988.24410 (70071912)	11639.67970 (70071113)
33300.0	5681.20264 (70080412)	8455.43359 (70061614)	10486.59670 (70071113)	12354.97170 (70080512)	12568.01460 (70071113)
33250.0	4045.63916 (70050712)	6711.46973 (70072711)	9885.64453 (70071113)	11356.97950 (70091214)	11727.10160 (70090611)
33200.0	2706.73779 (70062010)	5477.63623 (70070312)	9047.82324 (70060811)	10212.39840 (70060811)	10070.62110 (70060811)
33150.0	2713.82617 (70082013)	5699.94678 (70070910)	8581.33691 (70082612)	10132.24220 (70052512)	10136.37300 (70052[illegible]
33100.0	2863.82104 (70050513)	5668.50635 (70070912)	8627.43750 (70072413)	10858.38570 (70072413)	11524.29200 (70072[illegible]
33050.0	3202.52905 (70080411)	6248.47607 (70062211)	9245.34766 (70080411)	11732.71390 (70072413)	12653.39940 (70091213)
33000.0	5049.32129 (70070310)	7392.16260 (70061613)	8734.96777 (70080411)	9942.71387 (70080411)	10901.78810 (70072413)
32950.0	6664.03906 (70091112)	8823.64551 (70070310)	10183.75290 (70070310)	9773.88574 (70070310)	8729.13379 (70091213)
32900.0	9089.27930 (70081411)	9893.72852 (70080113)	10116.66990 (70080113)	9869.24805 (70070310)	9043.86719 (70070310)
32850.0	9608.85547 (70081411)	12148.29200 (70081411)	11411.69240 (70070913)	10370.53420 (70061613)	8331.75977 (70081411)
32800.0	8221.01660 (70081411)	11345.38870 (70081411)	12333.40630 (70070913)	10683.29300 (70070913)	8540.28027 (70061613)
32750.0	7872.64453 (70062812)	9208.03027 (70081411)	10736.77830 (70081411)	10614.25780 (70070913)	9440.32520 (70071614)
32700.0	7446.76611 (70090709)	8049.78467 (70101015)	8930.20215 (70022214)	9534.93555 (70111614)	9789.64258 (70071614)
32650.0	8747.44922 (70091114)	7968.05518 (70091114)	8750.53418 (70111615)	9320.92676 (70102512)	10384.51860 (70111614)
32600.0	8749.92578 (70121714)	8682.59668 (70090709)	8772.67969 (70022214)	8831.87109 (70111615)	10021.54200 (70102512)

*** MODELING OPTIONS USED: CONC RURAL FLAT DFAULT

*** THE 2ND HIGHEST 1-HR AVERAGE CONCENTRATION VALUES FOR SOURCE GROUP: ALL ***
INCLUDING SOURCE(S): 202 ,

*** NETWORK ID: CAR ; NETWORK TYPE: GRIDCART ***

** CONC OF OTHER IN (MICROGRAMS/CUBIC-METER) **

Y-COORD (METERS)	X-COORD (METERS) 65900.00
33800.0	10152.41110 (70031815)
33750.0	9956.01660 (70031815)
33700.0	9541.05176 (70060909)
33650.0	9914.20313 (70071508)
33600.0	9664.92480 (70071909)
33550.0	9721.71094 (70071508)
33500.0	9214.86914 (70081510)
33450.0	9703.39844 (70061614)
33400.0	9933.33105 (70071912)
33350.0	11190.38670 (70080512)
33300.0	11473.46390 (70071113)
33250.0	10629.83200 (70090611)
33200.0	9253.30371 (70070312)
33150.0	9311.74316 (70052512)
33100.0	11013.25880 (70072413)
33050.0	12009.25590 (70091213)
33000.0	11003.93550 (70072413)
32950.0	9269.24609 (70091213)
32900.0	8552.17480 (70082109)
32850.0	9121.32422 (70071817)
32800.0	9502.21387 (70071208)
32750.0	8953.79980 (70071614)
32700.0	10308.51070 (70071614)
32650.0	10286.92190 (70071614)
32600.0	10557.75780 (70111614)

*** MODELING OPTIONS USED: CONC RURAL FLAT DFAULT

*** THE 1ST HIGHEST 8-HR AVERAGE CONCENTRATION VALUES FOR SOURCE GROUP: ALL ***
INCLUDING SOURCE(S): 202 ,

*** NETWORK ID: CAR ; NETWORK TYPE: GRIDCART ***

** CONC OF OTHER IN (MICROGRAMS/CUBIC-METER) **

Y-COORD (METERS)	X-COORD (METERS) 64900.00	64950.00	65000.00	65050.00	65100.00
33800.0	2770.96313 (70091616)	2923.87183 (70091616)	2944.85254 (70091616)	2869.50195 (70091616)	2660.32397 (70091616)
33750.0	2930.48584c(70041516)	2933.77344 (70091616)	3055.56494 (70091616)	3037.18481 (70091616)	2892.70166 (70091616)
33700.0	3629.03394c(70041516)	3130.88501c(70041516)	3054.33203 (70091616)	3130.80835 (70091616)	3054.03589 (70091616)
33650.0	4231.45361c(70041516)	3941.63452c(70041516)	3285.74805c(70041516)	3097.45020 (70091616)	3110.21045 (70091616)
33600.0	4583.15576c(70041516)	4626.13086c(70041516)	4210.08203c(70041516)	3342.62769c(70041516)	3012.66162 (70091616)
33550.0	4549.95605c(70041516)	4979.22412c(70041516)	4964.29980c(70041516)	4354.74414c(70041516)	3210.66211c(70041516)
33500.0	4099.84180c(70041516)	4840.88818c(70041516)	5278.36230c(70041516)	5124.94238c(70041516)	4215.53809c(70041516)
33450.0	3353.45142c(70041516)	4216.03076c(70041516)	4973.64844c(70041516)	5301.29590c(70041516)	4865.71533c(70041516)
33400.0	2771.27466 (70052116)	3310.68677c(70041516)	4124.23193c(70041516)	4729.22217c(70041516)	4769.81006c(70041516)
33350.0	2934.63892 (70082916)	2702.89966 (70052116)	3042.09888c(70041516)	3628.21606c(70041516)	3903.58423c(70041516)
33300.0	3151.52100 (70082916)	2915.44043 (70082916)	2832.21802c(70063016)	2865.84741c(70063016)	2650.71924c(70063016)
33250.0	2644.16235 (70082916)	2656.87891 (70052116)	2800.63135 (70052116)	2713.58252 (70052116)	2405.44214c(70063016)
33200.0	2814.44678c(70121416)	2502.79590 (70052116)	2720.01099 (70052116)	2746.35864 (70052116)	2476.28027 (70052116)
33150.0	2644.41309 (70031616)	2392.27734c(70071216)	2548.87158c(70071216)	2545.88892c(70071216)	2281.24927c(70071216)
33100.0	2964.73999 (70031616)	2634.84863 (70031616)	2795.22266c(70071216)	2865.60034c(70071216)	2625.83643c(70071216)
33050.0	2710.56689 (70031616)	2603.68213c(70071216)	2858.63086c(70071216)	2896.90356c(70071216)	2592.23853c(70071216)
33000.0	2336.45874 (70031616)	2495.60718c(70071216)	2686.90454c(70071216)	2623.66675c(70071216)	2236.17334c(70071216)
32950.0	2068.04883 (70032716)	2198.70630c(70071216)	2337.41821c(70042116)	2446.41089c(70042116)	2337.21753c(70042116)
32900.0	2347.05469c(70042116)	2644.03271c(70042116)	2852.52588c(70042116)	2799.82593c(70042116)	2349.13403c(70042116)
32850.0	2700.49634c(70042116)	2901.97241c(70042116)	2876.54321c(70042116)	2507.17505c(70042116)	2371.15552 (70040716)
32800.0	2739.95557c(70042116)	2694.17798c(70042116)	2386.68506c(70042116)	2481.11084 (70040716)	2465.21631 (70040716)
32750.0	2413.69141c(70042116)	2267.94580c(70011416)	2351.12695 (70040716)	2486.68848 (70040716)	2379.42188 (70040716)
32700.0	2479.63501c(70011416)	2286.15259c(70011416)	2331.63794 (70040716)	2371.07617 (70040716)	2148.62524 (70040716)
32650.0	2370.82397c(70011416)	2121.90869 (70040716)	2232.23560 (70040716)	2158.76538c(70040416)	2342.17700c(70040416)
32600.0	2040.98047c(70011416)	2046.71399 (70040716)	2118.30396c(70040416)	2302.80981c(70040416)	2466.66870c(70040416)

*** MODELING OPTIONS USED: CONC RURAL FLAT DFAULT

*** THE 1ST HIGHEST 8-HR AVERAGE CONCENTRATION VALUES FOR SOURCE GROUP: ALL ***
INCLUDING SOURCE(S): 202 ,

*** NETWORK ID: CAR ; NETWORK TYPE: GRIDCART ***

** CONC OF OTHER IN (MICROGRAMS/CUBIC-METER) **

Y-COORD (METERS)	X-COORD (METERS) 65150.00	65200.00	65250.00	65300.00	65350.00
33800.0	2843.70068 (70042916)	3017.96338 (70042916)	3485.19629c(70072616)	4040.50317c(70072616)	4342.64209c(70072616)
33750.0	2795.79053 (70042916)	3040.26929 (70042916)	3461.08813c(70072616)	4145.78906c(70072616)	4559.14160c(70072616)
33700.0	2797.69922 (70091616)	2976.20044 (70042916)	3321.98730c(70072616)	4142.04492c(70072616)	4688.21045c(70072616)
33650.0	2940.70654 (70091616)	2821.56909 (70052816)	3032.99878c(70072616)	3968.86206c(70072616)	4656.71631c(70072616)
33600.0	2934.83643 (70091616)	2987.82031 (70051416)	2761.42114c(70063016)	3554.20728c(70072616)	4361.87207c(70072616)
33550.0	2838.66870c(70063016)	3184.40625c(70063016)	3141.32690c(70063016)	2880.23413c(70072616)	3733.15649c(70072616)
33500.0	2830.49585c(70062816)	3235.86157c(70063016)	3267.71606c(70063016)	2720.18433c(70063016)	2843.91528c(70072616)
33450.0	3589.15967c(70041516)	2948.46265c(70063016)	3052.93481c(70063016)	2543.69922c(70063016)	1762.22607c(70072616)
33400.0	3991.29883c(70041516)	2651.32104c(70062816)	2343.86401c(70063016)	1886.35938c(70063016)	1077.51831 (70081516)
33350.0	3609.47729c(70041516)	2504.68945c(70041516)	1400.47693c(70063016)	993.07391c(70063016)	505.95636 (70081516)
33300.0	2500.11523c(70041516)	1803.36328c(70041516)	1018.59552 (70062916)	310.04465c(70063016)	112.02970 (70081516)
33250.0	1765.15100c(70063016)	967.86139c(70063016)	481.47638 (70062916)	109.27476 (70062916)	3.80746c(70082716)
33200.0	1771.66565 (70052116)	846.46545 (70052116)	177.07249 (70052116)	7.82230 (70062916)	0.01171 (70062916)
33150.0	1664.21973c(70071216)	840.74695c(70071216)	184.09593c(70071216)	3.35463c(70071216)	0.00002c(70063016)
33100.0	1943.35510c(70071216)	987.88171c(70071216)	217.89967c(70071216)	4.38018c(70071216)	0.00023 (70051816)
33050.0	1800.89294c(70071216)	808.49854c(70071216)	214.44740c(70042116)	23.56939 (70051816)	0.32079 (70082516)
33000.0	1502.21606c(70042116)	998.50616c(70042116)	400.75848c(70062416)	134.39122c(70062416)	42.34423c(70062816)
32950.0	1867.65649c(70042116)	1063.80981c(70042116)	663.02393c(70062416)	399.52985 (70082516)	344.38937c(70071816)
32900.0	1898.30676 (70040716)	1428.20471 (70040716)	967.59570 (70082516)	1263.84753c(70071816)	1218.94812c(70071816)
32850.0	2108.43311 (70040716)	1542.89709 (70040716)	1832.38965c(70071816)	2486.02612c(70071816)	2313.75171c(70071816)
32800.0	2119.39551 (70040716)	1741.32947c(70071816)	2734.50781c(70071816)	3378.99536c(70071816)	3083.86938c(70071816)
32750.0	1933.48853 (70040716)	2316.40356c(70071816)	3247.81665c(70071816)	3698.24023c(70071816)	3277.74438c(70071816)
32700.0	2232.23022c(70040416)	2583.77612c(70071816)	3333.63062c(70071816)	3599.36206c(70071816)	3142.56934c(70071816)
32650.0	2442.16089c(70040416)	2567.25195c(70071816)	3110.54590c(70071816)	3222.67603c(70071816)	2816.04321 (70100416)
32600.0	2460.08472c(70040416)	2441.64478 (70092616)	2943.38672 (70092616)	3012.58521 (70092616)	3093.72339 (70100416)

*** MODELING OPTIONS USED: CONC RURAL FLAT DFAULT

*** THE 1ST HIGHEST 8-HR AVERAGE CONCENTRATION VALUES FOR SOURCE GROUP: ALL ***
INCLUDING SOURCE(S): 202 ,

*** NETWORK ID: CAR ; NETWORK TYPE: GRIDCART ***

** CONC OF OTHER IN (MICROGRAMS/CUBIC-METER) **

Y-COORD (METERS)	X-COORD (METERS) 65400.00	65450.00	65500.00	65550.00	65600.00
33800.0	4229.56885c(70072616)	3615.46313c(70072616)	3212.69360 (70061016)	3565.57373 (70061016)	3746.15234 (70061016)
33750.0	4484.28125c(70072616)	3797.74292c(70072616)	3341.75537 (70061016)	3727.81934 (70061016)	3864.92944 (70061016)
33700.0	4670.85449c(70072616)	3912.53516c(70072616)	3393.76929 (70061016)	3803.72485 (70061016)	3863.84082 (70061016)
33650.0	4716.16553c(70072616)	3896.21362c(70072616)	3320.29956 (70061016)	3735.53564 (70061016)	3679.64502 (70061016)
33600.0	4512.71924c(70072616)	3663.36816c(70072616)	3062.52197 (70061016)	3452.55542 (70061016)	3249.53394 (70061016)
33550.0	3965.65405c(70072616)	3141.11401c(70072616)	2666.73486 (70070716)	2892.84448 (70061016)	3286.52393c(70073016)
33500.0	3140.15308c(70072616)	2582.36987c(70050516)	2391.89917 (70070716)	2329.13794c(70073016)	3630.76587c(70073016)
33450.0	2023.03284c(70072616)	2037.06348c(70050516)	1896.41357 (70070716)	2344.93481c(70073016)	3730.32642c(70073016)
33400.0	1189.80310 (70071316)	1293.45117 (70070716)	1195.22852 (70070716)	1980.15271c(70073016)	3173.17603c(70073016)
33350.0	463.05338 (70071316)	543.00366 (70070716)	612.45807 (70061716)	1213.20789c(70073016)	1950.87305c(70073016)
33300.0	57.01037 (70071316)	68.97379 (70070716)	151.56676 (70061716)	406.84232c(70073016)	775.06335 (70052216)
33250.0	0.23090 (70071316)	0.22025 (70070716)	4.26399c(70081616)	74.37267 (70052216)	337.47757 (70071916)
33200.0	0.00000c(70083116)	0.00000c(70072716)	0.00256 (70052216)	4.95371 (70050716)	113.28680c(70072716)
33150.0	0.00000 (0)	0.00000 (0)	0.00000 (70091216)	0.95936 (70070916)	107.53774 (7007091
33100.0	0.00000 (70092916)	0.00000 (70070916)	0.00005c(70061616)	2.33650c(70050516)	114.96366c(700505
33050.0	0.00206c(70081316)	0.00191 (70071016)	0.31953c(70071816)	16.43135 (70061916)	218.04376 (70090716)
33000.0	12.03416c(70081316)	12.01630 (70071016)	47.73253 (70070216)	164.56151c(70071816)	468.04025 (70080116)
32950.0	253.72533c(70081316)	246.29895 (70062216)	431.88980 (70071016)	731.77728 (70070216)	1083.86548 (70080116)
32900.0	911.72180c(70081316)	870.57336 (70062216)	1191.93469 (70071016)	1498.41101 (70070216)	1684.97095 (70070216)
32850.0	1698.44031c(70081316)	1560.60400 (70062216)	1933.72583 (70071016)	2031.76855 (70070216)	2493.60107 (70070216)
32800.0	2296.14282c(70081316)	2262.43311c(70081316)	2380.44409 (70071016)	2453.66260 (70071016)	2918.22241 (70070216)
32750.0	2591.86890c(70081316)	2795.69995c(70081316)	2777.53906c(70081316)	2636.52490 (70071016)	3045.42236 (70070216)
32700.0	2713.31958c(70081316)	3114.92334c(70081316)	3279.96558c(70081316)	2974.10620c(70081316)	2983.47192 (70070216)
32650.0	2789.38428 (70100416)	3237.32251c(70081316)	3507.61499c(70081316)	3356.10303c(70081316)	2817.63770 (70070216)
32600.0	3007.94653 (70100416)	3216.62256c(70081316)	3531.79419c(70081316)	3494.86719c(70081316)	2985.47070c(70081316)

*** MODELING OPTIONS USED: CONC RURAL FLAT DFAULT

*** THE 1ST HIGHEST 8-HR AVERAGE CONCENTRATION VALUES FOR SOURCE GROUP: ALL ***
INCLUDING SOURCE(S): 202 ,

*** NETWORK ID: CAR ; NETWORK TYPE: GRIDCART ***

** CONC OF OTHER IN (MICROGRAMS/CUBIC-METER) **

Y-COORD (METERS)	X-COORD (METERS) 65650.00	65700.00	65750.00	65800.00	65850.00
33800.0	3586.11914 (70061016)	3053.85107 (70061016)	2888.17651c(70081616)	3122.19556c(70081616)	3015.79907c(70081616)
33750.0	3563.99512 (70061016)	2863.82568 (70061016)	3188.75220c(70081616)	3273.52319c(70081616)	3021.03516c(70081616)
33700.0	3388.65991 (70061016)	3033.16577c(70081616)	3414.46191c(70081616)	3322.25586c(70081616)	2910.16382c(70081616)
33650.0	3019.16431 (70061016)	3325.96680c(70081616)	3520.17676c(70081616)	3225.65894c(70081616)	2646.30444c(70081616)
33600.0	3456.42407c(70073016)	3608.00610c(70073016)	3446.52319c(70081616)	2998.17896c(70073016)	2670.97021 (70071916)
33550.0	3991.82813c(70073016)	4107.49805c(70073016)	3748.74072c(70073016)	3178.50269c(70073016)	3085.64624 (70071916)
33500.0	4374.73291c(70073016)	4339.78809c(70073016)	3768.15942c(70073016)	3347.03735 (70071916)	3462.16211 (70071916)
33450.0	4304.23877c(70073016)	4020.80933c(70073016)	3375.23462 (70071916)	3759.50977 (70071916)	3773.58130 (70071916)
33400.0	3527.40771c(70073016)	3060.55298c(70073016)	3712.05127 (70071916)	4021.75415 (70071916)	3914.44092 (70071916)
33350.0	2050.78882c(70073016)	3106.10400 (70071916)	3765.09814 (70071916)	3943.49048 (70071916)	3711.20850 (70071916)
33300.0	1692.80579 (70071916)	2709.01733 (70071916)	3294.93335 (70071916)	3332.41846 (70071916)	3076.08618 (70071916)
33250.0	1032.24133 (70071916)	1829.78687 (70071916)	2325.19629c(70082616)	2744.95337c(70082616)	2803.16064c(70082616)
33200.0	533.02966c(70082616)	1345.08069c(70082616)	2091.01245c(70082616)	2446.73901c(70082616)	2461.62720c(70082616)
[illegible]150.0	636.40692 (70070916)	1379.54858 (70070916)	1950.19861 (70070916)	2315.94580 (70091216)	2668.91309 (70091216)
[illegible]00.0	568.46051 (70070916)	1248.89490 (70070916)	1768.61292 (70070916)	2217.27002 (70091216)	2585.41943c(70090116)
33050.0	746.78912 (70090716)	1294.40576 (70090716)	1613.84253c(70080416)	2017.81018 (70062616)	2415.88257 (70062616)
33000.0	995.36151c(70070316)	1580.56445c(70070316)	1907.18457 (70090716)	1917.27344 (70090716)	2332.74243 (70062616)
32950.0	1626.41772 (70080116)	1868.28369c(70070316)	2289.91626c(70070316)	2311.63745c(70070316)	2280.18164 (70052516)
32900.0	2244.26587 (70080116)	2612.64453 (70080116)	2486.71094 (70080116)	2421.21826 (70090716)	2375.24854 (70052516)
32850.0	2253.22339 (70080116)	2844.28247 (70080116)	3034.35742 (70080116)	2797.88135 (70080116)	2442.84497 (70090716)
32800.0	2727.10083 (70070216)	2562.79980 (70080116)	2993.47168 (70080116)	3044.96558 (70080116)	2757.89502 (70080116)
32750.0	3117.78247 (70070216)	2512.87988 (70070216)	2548.05640 (70080116)	2823.87695 (70080116)	2803.44531 (70080116)
32700.0	3244.03687 (70070216)	2849.38721 (70070216)	2718.76221c(70111616)	2694.74561c(70111616)	2551.12354c(70062316)
32650.0	3183.97632 (70070216)	2992.97217 (70070216)	2821.04541c(70111616)	3098.95703c(70111616)	2867.99756c(70111616)
32600.0	3030.57788 (70070216)	2997.15161 (70070216)	2642.09375c(70111616)	3207.93530c(70111616)	3242.30347c(70111616)

*** MODELING OPTIONS USED: CONC RURAL FLAT DFAULT

*** THE 1ST HIGHEST 8-HR AVERAGE CONCENTRATION VALUES FOR SOURCE GROUP: ALL ***
INCLUDING SOURCE(S): 202 ,

*** NETWORK ID: CAR ; NETWORK TYPE: GRIDCART ***

** CONC OF OTHER IN (MICROGRAMS/CUBIC-METER) **

Y-COORD (METERS)	X-COORD (METERS) 65900.00
33800.0	2692.40454c(70081616)
33750.0	2576.11035c(70081616)
33700.0	2416.98999 (70091216)
33650.0	2437.07690 (70071916)
33600.0	2818.32593c(70062116)
33550.0	3062.95313 (70071916)
33500.0	3323.16821 (70071916)
33450.0	3516.17139 (70071916)
33400.0	3536.83350 (70071916)
33350.0	3248.48364 (70071916)
33300.0	2791.51489c(70082616)
33250.0	2712.98096 (70100216)
33200.0	2557.64990 (70091216)
33150.0	2774.50146 (70091216)
33100.0	2762.92041c(70090116)
33050.0	2613.60449 (70062616)
33000.0	2638.53052 (70062616)
32950.0	2127.81372 (70052516)
32900.0	2376.65576 (70052516)
32850.0	2273.50073 (70090716)
32800.0	2293.26660 (70090716)
32750.0	2544.55957 (70080116)
32700.0	2495.27051 (70080116)
32650.0	2424.16772c(70062316)
32600.0	2872.96460c(70111616)

*** MODELING OPTIONS USED: CONC RURAL FLAT DFAULT

*** THE 2ND HIGHEST 8-HR AVERAGE CONCENTRATION VALUES FOR SOURCE GROUP: ALL ***
INCLUDING SOURCE(S): 202 ,

*** NETWORK ID: CAR ; NETWORK TYPE: GRIDCART ***

** CONC OF OTHER IN (MICROGRAMS/CUBIC-METER) **

Y-COORD (METERS)	X-COORD (METERS) 64900.00	64950.00	65000.00	65050.00	65100.00
33800.0	2264.12866c(70052316)	2253.47217 (70012716)	2519.02881 (70012716)	2687.21094 (70012716)	2585.48438 (70091716)
33750.0	2627.38599 (70091616)	2353.63818c(70041516)	2432.03467 (70012716)	2682.92285 (70012716)	2708.38184 (70012716)
33700.0	2705.55664c(70052316)	2771.57153 (70091616)	2515.55518c(70081916)	2578.69800 (70012716)	2740.32373 (70012716)
33650.0	2944.54810c(70092016)	2806.33228c(70052316)	2862.23730 (70091616)	2607.38501c(70081916)	2624.10986 (70012716)
33600.0	3125.21899c(70092016)	2934.92212c(70092016)	2830.07300c(70052316)	2855.76758 (70091616)	2606.13525 (70083016)
33550.0	3191.79956 (70052116)	3102.59619 (70052116)	2872.00024 (70052116)	2718.84058c(70052316)	2690.95898 (70091616)
33500.0	3271.40186 (70052116)	3294.82959 (70052116)	3099.55322 (70052116)	2790.75562 (70062916)	2874.94067c(70062816)
33450.0	3113.69019 (70052116)	3284.50366 (70052116)	3215.02026 (70052116)	3132.27197 (70062916)	3014.97656c(70062816)
33400.0	2534.22021c(70041516)	3024.55957 (70052116)	3087.12280 (70052116)	3068.55664 (70062916)	3203.04541 (70062916)
33350.0	2465.83447 (70052116)	2642.85376c(70063016)	2848.91577c(70063016)	2870.06836c(70063016)	2815.60815 (70062916)
33300.0	2374.92969 (70052116)	2610.10181c(70063016)	2672.17725 (70052116)	2511.32471 (70052116)	2650.29688c(70041516)
33250.0	2383.14453 (70052116)	2581.09253 (70082916)	2722.07617c(70063016)	2694.20239c(70063016)	2323.03540 (70052116)
33200.0	2513.62207c(70011416)	2464.06274c(70063016)	2606.21948c(70063016)	2510.58765c(70063016)	2103.16626c(70063016)
[illegible]50.0	2487.39453c(70121416)	2331.37622 (70031616)	2371.60864c(70063016)	2232.63647c(70063016)	1886.10938 (70052116)
[illegible]00.0	2310.98511c(70041516)	2556.33862c(70071216)	2334.81543c(70041516)	2064.40405c(70041516)	1645.77710c(70051916)
33050.0	2314.64307c(70051916)	2362.84229 (70031616)	2241.36035c(70041516)	1988.81567c(70041516)	1532.54370c(70041516)
33000.0	2181.21533c(70071216)	2001.20386 (70031616)	1844.09253c(70052316)	1775.38269c(70042116)	1727.63196c(70042116)
32950.0	2016.40906c(70042116)	2160.44385c(70042116)	2279.32593c(70071216)	2126.96509c(70071216)	2018.95679c(70060816)
32900.0	2226.16968 (70032716)	2059.65210c(70060816)	2198.42871c(70060816)	2145.86060c(70060816)	2018.76807 (70040716)
32850.0	1987.97168 (70032716)	1971.13318c(70060816)	2050.45508 (70040716)	2309.20947 (70040716)	1813.17505c(70042116)
32800.0	1652.29712c(70060816)	1972.67065 (70040716)	2277.47852 (70040716)	1824.06897c(70042116)	1341.11377 (70082416)
32750.0	2195.91821c(70011416)	2144.65503c(70042116)	2055.35889c(70011416)	1634.53235c(70040416)	1718.55664c(70040416)
32700.0	1882.83521 (70040716)	2137.60938 (70040716)	1881.23145c(70011416)	1935.72986c(70040416)	2083.68286c(70040416)
32650.0	1914.22266 (70040716)	2012.37244c(70011416)	1998.30688c(70040416)	2155.19604 (70040716)	1827.53979 (70040716)
32600.0	1906.55298 (70040716)	1960.36804c(70040416)	2055.71509 (70040716)	1869.19800 (70040716)	1742.30347 (70062216)

*** MODELING OPTIONS USED: CONC RURAL FLAT DFAULT

*** THE 2ND HIGHEST 8-HR AVERAGE CONCENTRATION VALUES FOR SOURCE GROUP: ALL ***
INCLUDING SOURCE(S): 202 ,

*** NETWORK ID: CAR ; NETWORK TYPE: GRIDCART ***

** CONC OF OTHER IN (MICROGRAMS/CUBIC-METER) **

Y-COORD (METERS)	X-COORD (METERS) 65150.00	65200.00	65250.00	65300.00	65350.00
33800.0	2599.98193 (70052816)	2803.92944c(70072616)	2933.27637 (70042916)	2486.06616 (70090816)	2548.48291 (70051516)
33750.0	2729.47632 (70052816)	2670.43677c(70072616)	3031.81128 (70042916)	2617.73535 (70042916)	2726.29541 (70051516)
33700.0	2726.04590 (70052816)	2767.10620 (70052816)	3052.47241 (70042916)	2720.99780 (70042916)	2883.13110 (70051516)
33650.0	2780.92383 (70051416)	2804.61133 (70051416)	2960.88062 (70042916)	2739.43677 (70042916)	2971.08789 (70051516)
33600.0	2805.86987 (70051416)	2884.98413c(70063016)	2751.78564 (70051416)	2622.65625 (70042916)	2908.50854 (70051516)
33550.0	2733.04858 (70091616)	2989.63721 (70051416)	2852.25220 (70051416)	2576.38354c(70063016)	2615.94019 (70051516)
33500.0	2826.65552c(70063016)	2699.57739 (70051416)	2730.98096 (70051416)	2219.32422 (70051416)	2082.68115 (70051516)
33450.0	3075.74585c(70062816)	2665.52466c(70062816)	2342.12231 (70051416)	1938.27234 (70051416)	1586.81152 (70071316)
33400.0	2971.00513c(70062816)	2513.58032c(70041516)	1785.99609c(70062816)	1373.45874 (70051416)	1026.49255c(70063016)
33350.0	2830.50244 (70062916)	2227.65332 (70062916)	1393.36023c(70062816)	662.15479 (70051416)	459.44412c(70063016)
33300.0	2106.24463c(70063016)	1769.75403 (70062916)	828.73279c(70041516)	278.09131 (70062916)	90.27319c(70063016)
33250.0	1549.18567 (70052116)	825.20624c(70041516)	345.97153c(70041516)	62.10013 (70060916)	3.55904 (70081516)
33200.0	1362.25061c(70063016)	597.87988c(70063016)	128.28461c(70063016)	7.36940c(70052416)	0.00567 (70060916)
33150.0	1440.31738 (70070616)	767.59875 (70070616)	174.38812 (70070616)	3.35096 (70070616)	0.00001 (7005221
33100.0	1131.75073 (70070616)	559.45251 (70070616)	111.80220 (70070616)	2.50736 (70052216)	0.00018c(7007121
33050.0	938.02576c(70052316)	532.20422c(70042116)	193.88594 (70051816)	22.96014c(70042116)	0.28791c(70062416)
33000.0	1457.21790c(70071216)	888.45355c(70060816)	391.96536c(70042116)	132.79247 (70082516)	21.38271c(70071816)
32950.0	1628.16345c(70060816)	1028.95276 (70040716)	643.87000 (70082516)	398.07385c(70062816)	301.55206c(70062816)
32900.0	1584.11389c(70042116)	1079.04907c(70062416)	812.71063c(70071816)	855.16132c(70062816)	895.37488c(70081316)
32850.0	1125.55017c(70062416)	1214.47900 (70082516)	1383.69299 (70092916)	1323.04370 (70092916)	1597.43201c(70081316)
32800.0	1311.97681 (70082416)	1571.36609 (70092916)	1895.68811 (70092916)	1778.94885 (70070616)	2078.44946c(70081316)
32750.0	1829.75122c(70040416)	1933.11902 (70092916)	2154.48193 (70092916)	2101.76392 (70092616)	2246.88452c(70081316)
32700.0	1724.76416c(70071816)	2185.72754c(70040416)	2218.02759 (70092616)	2650.16553 (70092616)	2398.47534 (70092616)
32650.0	1855.14612c(70071816)	2242.90845c(70040416)	2692.74829 (70092616)	2938.28418 (70092616)	2777.90039c(70071816)
32600.0	1952.41199 (70062216)	2364.59863c(70071816)	2718.76978c(70071816)	2766.59668 (70100416)	2554.33008 (70092616)

*** MODELING OPTIONS USED: CONC RURAL FLAT DFAULT

*** THE 2ND HIGHEST 8-HR AVERAGE CONCENTRATION VALUES FOR SOURCE GROUP: ALL ***
INCLUDING SOURCE(S): 202 ,

*** NETWORK ID: CAR ; NETWORK TYPE: GRIDCART ***

** CONC OF OTHER IN (MICROGRAMS/CUBIC-METER) **

Y-COORD (METERS)	X-COORD (METERS) 65400.00	65450.00	65500.00	65550.00	65600.00
33800.0	2782.00562 (70073116)	3109.59082 (70073116)	3017.97412 (70073116)	2719.28687 (70073116)	3166.51807 (70091916)
33750.0	2927.99780 (70073116)	3293.72900 (70073116)	3164.22827 (70073116)	2819.38232 (70073116)	3142.67407 (70091916)
33700.0	3063.98511 (70051516)	3427.82227 (70073116)	3250.91919 (70073116)	2859.91479 (70073116)	3000.78613 (70091916)
33650.0	3221.25659 (70051516)	3457.32349 (70073116)	3226.01758 (70073116)	2802.64502 (70070716)	2878.79541 (70061116)
33600.0	3230.40625 (70051516)	3301.35669 (70073116)	3017.12451 (70073116)	2759.65088 (70061116)	2861.70166c(70073016)
33550.0	2995.11401 (70051516)	2891.73755 (70073116)	2571.70874 (70073116)	2517.70654 (70061116)	2548.60449 (70061016)
33500.0	2598.47290c(70050516)	2407.12769c(70072616)	2124.36157 (70051316)	2247.48828 (70071416)	2343.72534 (70071316)
33450.0	1965.51379c(70050516)	1953.25208 (70070716)	1687.85071 (70071416)	1921.86743 (70071416)	2247.17676 (70071316)
33400.0	1068.37195 (70070716)	1207.64343c(70050516)	1129.44312 (70071416)	1461.18445 (70061716)	1941.57849 (70071316)
33350.0	426.11111 (70070716)	441.40378c(70050516)	542.73175 (70071416)	875.82025 (70071316)	1338.35059 (70071316)
33300.0	47.36183 (70070716)	50.00115c(70050516)	126.06091 (70071416)	378.85101 (70052216)	744.91907 (70071916)
33250.0	0.22390 (70042916)	0.19227 (70061716)	4.16070 (70071416)	49.22512 (70071916)	280.27954 (70071116)
33200.0	0.00000c(70063016)	0.00000c(70073016)	0.00177 (70071916)	3.73029c(70072716)	104.53062 (70050716)
[illegible]150.0	0.00000 (0)	0.00000 (0)	0.00000c(70082616)	0.87036 (70062016)	79.66783c(70082016)
[illegible]00.0	0.00000 (70040716)	0.00000c(70062816)	0.00003 (70052516)	1.84444 (70090716)	101.74575 (70090716)
33050.0	0.00155c(70062816)	0.00111 (70062216)	0.24363 (70090616)	14.23969c(70061416)	180.29106 (70052516)
33000.0	11.64796 (70070616)	10.86600 (70062216)	36.89285 (70071016)	158.67401 (70080116)	410.18777c(70061416)
32950.0	243.85168 (70070616)	222.44164 (70071016)	331.46240 (70070216)	477.94388 (70080116)	781.78784c(70061416)
32900.0	801.70612 (70070616)	744.25903 (70071016)	859.28503 (70062216)	1133.73340 (70071016)	1465.72864 (70080116)
32850.0	1384.39880 (70070616)	1458.49768c(70081316)	1596.29053 (70062216)	1942.59680 (70071016)	1529.48547 (70071016)
32800.0	1929.08936c(70071816)	2000.67786 (70062216)	2068.91064 (70062216)	2234.67627 (70070216)	2086.02441 (70071016)
32750.0	2157.78296c(70071816)	2110.06860 (70062216)	2514.06543 (70071016)	2309.04541c(70081316)	2383.29639 (70071016)
32700.0	2384.36255 (70100416)	2386.27710c(70080516)	2482.17603 (70071016)	2615.77319 (70071016)	2449.40674 (70071016)
32650.0	2713.13794c(70081316)	2717.89819c(70080516)	2335.10327 (70071016)	2459.39551 (70071016)	2669.54565c(70081316)
32600.0	2955.42969c(70080516)	2918.36133c(70080516)	2610.87256 (70080616)	2528.97681 (70080616)	2595.57422 (70070216)

*** MODELING OPTIONS USED: CONC RURAL FLAT DFAULT

*** THE 2ND HIGHEST 8-HR AVERAGE CONCENTRATION VALUES FOR SOURCE GROUP: ALL ***
INCLUDING SOURCE(S): 202 ,

*** NETWORK ID: CAR ; NETWORK TYPE: GRIDCART ***

** CONC OF OTHER IN (MICROGRAMS/CUBIC-METER) **

Y-COORD (METERS)	X-COORD (METERS) 65650.00	65700.00	65750.00	65800.00	65850.00
33800.0	2987.69336 (70091916)	2454.14453 (70073116)	2554.34106 (70042416)	2510.17676 (70042416)	2573.16357 (70060916)
33750.0	2806.39233 (70091916)	2675.03223c(70081616)	2464.34888 (70092216)	2625.82275 (70060916)	2600.58252 (70060916)
33700.0	2584.92822 (70073116)	2618.67944c(70073016)	2554.79004 (70060916)	2668.48413 (70060916)	2456.87500 (70060916)
33650.0	2939.59253c(70073016)	3069.28833c(70073016)	2943.34375c(70073016)	2671.36328c(70073016)	2372.32007c(70073016)
33600.0	2888.03613c(70081616)	3488.05664c(70081616)	3399.38647c(70073016)	2931.36426c(70081616)	2594.98608c(70073016)
33550.0	3054.17310c(70081616)	3432.16992c(70081616)	3119.86890c(70081616)	2857.96533 (70071916)	2819.84717c(70062116)
33500.0	2982.89624c(70081616)	3053.50000c(70081616)	2888.55005 (70071916)	3043.60107c(70073016)	2917.92847c(70062116)
33450.0	2593.06030c(70081616)	2606.82349 (70071916)	3287.06226c(70073016)	2545.67139c(70082616)	2917.45435c(70082616)
33400.0	2016.52649 (70071316)	2992.59839 (70071916)	2300.57813c(70073016)	2760.66528c(70082616)	3042.66748c(70082616)
33350.0	2032.44031 (70071916)	1826.42065c(70061616)	2298.51245c(70082616)	2864.13647c(70082616)	3059.11304c(70082616)
33300.0	1057.01929 (70071116)	1710.45435 (70071116)	2367.26123c(70082616)	2845.03711c(70082616)	2972.95337c(70082616)
33250.0	759.08130 (70071116)	1473.89832c(70082616)	2306.24243 (70071916)	2374.47681 (70071916)	2280.50195 (70100216)
33200.0	450.29144 (70071916)	975.36255 (70070916)	1576.96655 (70070916)	2137.37891 (70091216)	2460.06006 (70091216)
33150.0	452.44543c(70082016)	994.66980c(70082616)	1662.67261 (70091216)	2178.19849 (70070916)	2369.38525c(7009011
33100.0	477.30350c(70050516)	892.12787 (70090716)	1604.46985 (70091216)	2178.40283c(70090116)	2555.07788 (7009121
33050.0	562.89087 (70052516)	1068.18176c(70080416)	1590.13818 (70090716)	1937.99097c(70080416)	2159.88989 (70091216)
33000.0	942.53326 (70090716)	1579.30261 (70090716)	1827.78601c(70070316)	1883.94153 (70052516)	1878.39233c(70080416)
32950.0	1141.94519c(70061416)	1779.58643 (70080116)	2153.50024 (70090716)	2228.23315 (70052516)	2085.57349c(70070316)
32900.0	1479.94153 (70091116)	1755.33435 (70091116)	2164.31982 (70090716)	2400.27905c(70070316)	2334.24951c(70070316)
32850.0	2094.68701 (70070216)	1939.32983 (70091116)	2037.58630 (70091116)	2331.96362 (70090716)	2317.25366 (70080116)
32800.0	1876.51013 (70080116)	2004.15454 (70070216)	2330.01050c(70062316)	2197.33569c(70062316)	2256.88721 (70090716)
32750.0	1954.64380 (70071016)	2064.71729c(70111616)	2415.50537c(70062316)	2555.27563c(70062316)	2323.46533c(70062316)
32700.0	2110.94482 (70071016)	2189.44019c(70111616)	2161.71924c(70062316)	2540.25073c(70062316)	2526.24731 (70080116)
32650.0	2100.13770 (70071016)	2049.51782c(70111616)	2389.18799 (70070216)	2261.13354c(70062316)	2486.52734c(70062316)
32600.0	2128.74854c(70081316)	1827.44458 (70050616)	2572.14502 (70070216)	1936.72693 (70070216)	2221.46021c(70062316)

*** MODELING OPTIONS USED: CONC RURAL FLAT DFAULT

*** THE 2ND HIGHEST 8-HR AVERAGE CONCENTRATION VALUES FOR SOURCE GROUP: ALL ***
INCLUDING SOURCE(S): 202 ,

*** NETWORK ID: CAR ; NETWORK TYPE: GRIDCART ***

** CONC OF OTHER IN (MICROGRAMS/CUBIC-METER) **

Y-COORD (METERS)	X-COORD (METERS) 65900.00
33800.0	2473.36108 (70091216)
33750.0	2522.70020 (70091216)
33700.0	2341.85474c(70081616)
33650.0	2394.14575c(70062116)
33600.0	2767.27539 (70071916)
33550.0	3027.66748c(70062116)
33500.0	2884.04541c(70082616)
33450.0	2982.61157c(70082616)
33400.0	3010.02075c(70082616)
33350.0	2936.17603c(70082616)
33300.0	2655.41528 (70071916)
33250.0	2591.69312c(70082616)
33200.0	2368.49365 (70100216)
33150.0	2541.20093c(70090116)
33100.0	2657.72412 (70091216)
33050.0	2279.73413c(70090116)
33000.0	2087.71118c(70100116)
32950.0	2120.28198 (70062616)
32900.0	2065.79956c(70070316)
32850.0	2250.16895 (70052516)
32800.0	2292.90039 (70080116)
32750.0	2067.13135 (70090716)
32700.0	2284.16211c(70062316)
32650.0	2386.75610c(70111616)
32600.0	2341.51514c(70062316)

*** MODELING OPTIONS USED: CONC RURAL FLAT DFAULT

*** THE MAXIMUM 50 1-HR AVERAGE CONCENTRATION VALUES FOR SOURCE GROUP: ALL ***
INCLUDING SOURCE(S): 202 ,

** CONC OF OTHER IN (MICROGRAMS/CUBIC-METER) **

RANK	CONC	(YYMMDDHH)	AT	RECEPTOR (XR,YR)		OF TYPE	RANK	CONC	(YYMMDDHH)	AT	RECEPTOR (XR,YR)		OF TYPE
1.	12692.95310	(70041513)	AT (	65000.00,	33050.00)	GC	26.	12568.01460	(70080512)	AT (	65850.00,	33300.00)	GC
2.	12681.37890	(70050711)	AT (	65200.00,	33500.00)	GC	27.	12568.01460	(70082613)	AT (	65850.00,	33300.00)	GC
3.	12678.54490	(70063016)	AT (	65000.00,	33150.00)	GC	28.	12559.80570	(70062813)	AT (	65150.00,	33500.00)	GC
4.	12673.26460	(70041512)	AT (	65050.00,	33350.00)	GC	29.	12558.81050	(70073011)	AT (	65700.00,	33450.00)	GC
5.	12666.55370	(70072413)	AT (	65850.00,	33050.00)	GC	30.	12555.71090	(70072712)	AT (	65600.00,	33550.00)	GC
6.	12657.97170	(70080313)	AT (	65350.00,	32700.00)	GC	31.	12550.12890	(70083011)	AT (	65100.00,	33400.00)	GC
7.	12653.39940	(70091213)	AT (	65850.00,	33050.00)	GC	32.	12547.87210	(70072410)	AT (	65100.00,	33400.00)	GC
8.	12652.50780	(70081512)	AT (	65050.00,	32950.00)	GC	33.	12545.95410	(70071912)	AT (	65800.00,	33400.00)	GC
9.	12642.95310	(70062515)	AT (	65450.00,	32700.00)	GC	34.	12541.93850	(70082611)	AT (	65400.00,	33550.00)	GC
10.	12642.95310	(70072514)	AT (	65450.00,	32700.00)	GC	35.	12528.33890	(70070714)	AT (	65050.00,	33350.00)	GC
11.	12638.55370	(70071610)	AT (	65000.00,	33050.00)	GC	36.	12528.33890	(70081514)	AT (	65050.00,	33350.00)	GC
12.	12631.91700	(70072414)	AT (	65250.00,	33550.00)	GC	37.	12524.15920	(70072713)	AT (	65050.00,	33400.00)	GC
13.	12615.12210	(70092912)	AT (	65250.00,	32750.00)	GC	38.	12524.15920	(70100111)	AT (	65050.00,	33400.00)	GC
14.	12612.00200	(70061614)	AT (	65800.00,	33350.00)	GC	39.	12513.11620	(70072411)	AT (	65400.00,	33550.00)	GC
15.	12608.12700	(70081413)	AT (	65150.00,	33450.00)	GC	40.	12511.93160	(70082211)	AT (	65350.00,	33550.00)	GC
16.	12607.87600	(70090112)	AT (	65850.00,	33100.00)	GC	41.	12505.04980	(70061612)	AT (	65450.00,	33550.00)	GC
17.	12602.10350	(70052211)	AT (	65000.00,	33250.00)	GC	42.	12502.95310	(70060912)	AT (	65150.00,	33500.00)	GC
18.	12600.97560	(70040712)	AT (	65100.00,	32850.00)	GC	43.	12498.24800	(70071814)	AT (	65300.00,	32700.00)	GC
19.	12599.67090	(70082012)	AT (	65100.00,	33450.00)	GC	44.	12496.00390	(70062812)	AT (	65550.00,	32700.00)	GC
20.	12584.74220	(70090611)	AT (	65850.00,	33300.00)	GC	45.	12495.77830	(70073113)	AT (	65450.00,	33550.00)	GC
21.	12577.14650	(70072912)	AT (	65000.00,	33100.00)	GC	46.	12494.15330	(70022112)	AT (	65050.00,	33300.00)	GC
22.	12576.44140	(70042112)	AT (	65200.00,	33500.00)	GC	47.	12488.95020	(70072411)	AT (	65400.00,	33600.00)	GC
23.	12575.71580	(70073012)	AT (	65650.00,	33500.00)	GC	48.	12487.23730	(70082611)	AT (	65400.00,	33600.00)	GC
24.	12572.25780	(70063010)	AT (	65250.00,	33550.00)	GC	49.	12486.10550	(70071810)	AT (	65000.00,	33300.00)	GC
25.	12568.01460	(70071113)	AT (	65850.00,	33300.00)	GC	50.	12485.89450	(70052310)	AT (	65000.00,	33000.00)	GC

*** RECEPTOR TYPES: GC = GRIDCART
GP = GRIDPOLR
DC = DISCCART
DP = DISCPOLR
BD = BOUNDARY

*** MODELING OPTIONS USED: CONC RURAL FLAT DFAULT

*** THE MAXIMUM 50 8-HR AVERAGE CONCENTRATION VALUES FOR SOURCE GROUP: ALL ***
INCLUDING SOURCE(S): 202 ,

** CONC OF OTHER IN (MICROGRAMS/CUBIC-METER) **

RANK	CONC	(YYMMDDHH)	AT	RECEPTOR (XR,YR)		OF TYPE	RANK	CONC	(YYMMDDHH)	AT	RECEPTOR (XR,YR)		OF TYPE
1.	5301.29590c	(70041516)	AT (	65050.00,	33450.00)	GC	26.	4304.23877c	(70073016)	AT (	65650.00,	33450.00)	GC
2.	5278.36230c	(70041516)	AT (	65000.00,	33500.00)	GC	27.	4231.45361c	(70041516)	AT (	64900.00,	33650.00)	GC
3.	5124.94238c	(70041516)	AT (	65050.00,	33500.00)	GC	28.	4229.56885c	(70072616)	AT (	65400.00,	33800.00)	GC
4.	4979.22412c	(70041516)	AT (	64950.00,	33550.00)	GC	29.	4216.03076c	(70041516)	AT (	64950.00,	33450.00)	GC
5.	4973.64844c	(70041516)	AT (	65000.00,	33450.00)	GC	30.	4215.53809c	(70041516)	AT (	65100.00,	33500.00)	GC
6.	4964.29980c	(70041516)	AT (	65000.00,	33550.00)	GC	31.	4210.08203c	(70041516)	AT (	65000.00,	33600.00)	GC
7.	4865.71533c	(70041516)	AT (	65100.00,	33450.00)	GC	32.	4145.78906c	(70072616)	AT (	65300.00,	33750.00)	GC
8.	4840.88818c	(70041516)	AT (	64950.00,	33500.00)	GC	33.	4142.04492c	(70072616)	AT (	65300.00,	33700.00)	GC
9.	4769.81006c	(70041516)	AT (	65100.00,	33400.00)	GC	34.	4124.23193c	(70041516)	AT (	65000.00,	33400.00)	GC
10.	4729.22217c	(70041516)	AT (	65050.00,	33400.00)	GC	35.	4107.49805c	(70073016)	AT (	65700.00,	33550.00)	GC
11.	4716.16553c	(70072616)	AT (	65400.00,	33650.00)	GC	36.	4099.84180c	(70041516)	AT (	64900.00,	33500.00)	GC
12.	4688.21045c	(70072616)	AT (	65350.00,	33700.00)	GC	37.	4040.50317c	(70072616)	AT (	65300.00,	33800.00)	GC
13.	4670.85449c	(70072616)	AT (	65400.00,	33700.00)	GC	38.	4021.75415	(70071916)	AT (	65800.00,	33400.00)	GC
14.	4656.71631c	(70072616)	AT (	65350.00,	33650.00)	GC	39.	4020.80933c	(70073016)	AT (	65700.00,	33450.00)	GC
15.	4626.13086c	(70041516)	AT (	64950.00,	33600.00)	GC	40.	3991.82813c	(70073016)	AT (	65650.00,	33550.00)	GC
16.	4583.15576c	(70041516)	AT (	64900.00,	33600.00)	GC	41.	3991.29883c	(70041516)	AT (	65150.00,	33400.00)	GC
17.	4559.14160c	(70072616)	AT (	65350.00,	33750.00)	GC	42.	3968.86206c	(70072616)	AT (	65300.00,	33650.00)	GC
[illegible]	4549.95605c	(70041516)	AT (	64900.00,	33550.00)	GC	43.	3965.65405c	(70072616)	AT (	65400.00,	33550.00)	GC
[illegible]	4512.71924c	(70072616)	AT (	65400.00,	33600.00)	GC	44.	3943.49048	(70071916)	AT (	65800.00,	33350.00)	GC
20.	4484.28125c	(70072616)	AT (	65400.00,	33750.00)	GC	45.	3941.63452c	(70041516)	AT (	64950.00,	33650.00)	GC
21.	4374.73291c	(70073016)	AT (	65650.00,	33500.00)	GC	46.	3914.44092	(70071916)	AT (	65850.00,	33400.00)	GC
22.	4361.87207c	(70072616)	AT (	65350.00,	33600.00)	GC	47.	3912.53516c	(70072616)	AT (	65450.00,	33700.00)	GC
23.	4354.74414c	(70041516)	AT (	65050.00,	33550.00)	GC	48.	3903.58423c	(70041516)	AT (	65100.00,	33350.00)	GC
24.	4342.64209c	(70072616)	AT (	65350.00,	33800.00)	GC	49.	3896.21362c	(70072616)	AT (	65450.00,	33650.00)	GC
25.	4339.78809c	(70073016)	AT (	65700.00,	33500.00)	GC	50.	3864.92944	(70061016)	AT (	65600.00,	33750.00)	GC

*** RECEPTOR TYPES: GC = GRIDCART
GP = GRIDPOLR
DC = DISCCART
DP = DISCPOLR
BD = BOUNDARY

*** MODELING OPTIONS USED: CONC RURAL FLAT DFAULT

*** THE SUMMARY OF HIGHEST 1-HR RESULTS ***

** CONC OF OTHER IN (MICROGRAMS/CUBIC-METER) **

GROUP ID			AVERAGE CONC	DATE (YYMMDDHH)	RECEPTOR (XR, YR, ZELEV, ZFLAG)				OF TYPE	NETWORK GRID-ID
ALL	HIGH	1ST HIGH VALUE IS	12692.95310	ON 70041513: AT (	65000.00,	33050.00,	0.00,	0.00)	GC	CAR
	HIGH	2ND HIGH VALUE IS	12653.39940	ON 70091213: AT (	65850.00,	33050.00,	0.00,	0.00)	GC	CAR

*** RECEPTOR TYPES: GC = GRIDCART
GP = GRIDPOLR
DC = DISCCART
DP = DISCPOLR
BD = BOUNDARY

*** MODELING OPTIONS USED: CONC RURAL FLAT DFAULT

*** THE SUMMARY OF HIGHEST 8-HR RESULTS ***

** CONC OF OTHER IN (MICROGRAMS/CUBIC-METER) **

GROUP ID		AVERAGE CONC	DATE (YYMMDDHH)	RECEPTOR (XR, YR, ZELEV, ZFLAG)				OF TYPE	NETWORK GRID-ID
ALL	HIGH 1ST HIGH VALUE IS	5301.29590c	ON 70041516: AT (	65050.00,	33450.00,	0.00,	0.00)	GC	CAR
	HIGH 2ND HIGH VALUE IS	3488.05664c	ON 70081616: AT (	65700.00,	33600.00,	0.00,	0.00)	GC	CAR

*** RECEPTOR TYPES: GC = GRIDCART
GP = GRIDPOLR
DC = DISCCART
DP = DISCPOLR
BD = BOUNDARY

*** MODELING OPTIONS USED: CONC RURAL FLAT DFAULT

*** Message Summary For ISC2 Model Execution ***

--------- Summary of Total Messages --------

A Total of 0 Fatal Error Message(s)
A Total of 0 Warning Message(s)
A Total of 2063 Informational Message(s)

A Total of 2063 Calm Hours Identified

******** FATAL ERROR MESSAGES ********
*** NONE ***

******** WARNING MESSAGES ********
*** NONE ***

****
*** ISCST2 Finishes Successfully ***
****

NMAX70F.DTA

```
NO ECHO

CO STARTING
CO TITLEONE New Bldgs. 5A,5B - FINE GRID 50m - 1970 - Case 1a
CO MODELOPT DFAULT CONC   RURAL
CO AVERTIME  1  8
CO POLLUTID OTHER
CO DCAYCOEF    .000000
CO RUNORNOT RUN
CO ERRORFIL nmax70f.ERR
CO FINISHED


SO STARTING

** Source Location Cards:
**          SRCID SRCTYP        XS            YS            ZS

SO LOCATION   202 POINT     65425.0000    33139.0000        .0000

** Source Parameter Cards:
** POINT:   SRCID       QS            HS         TS          VS         DS
** VOLUME:  SRCID       QS            HS       SYINIT      SZINIT
** AREA:    SRCID       QS            HS        XINIT

SO SRCPARAM   202    803.12400        45.7200   310.9300    18.2880      .7620

SO BUILDHGT 202          .00       .00       .00       .00       .00       .00
SO BUILDHGT 202          .00       .00       .00       .00       .00       .00
SO BUILDHGT 202          .00       .00       .00     24.87       .00       .00
SO BUILDHGT 202          .00       .00       .00       .00       .00       .00
SO BUILDHGT 202          .00       .00       .00       .00     24.87     24.87
SO BUILDHGT 202        24.87     24.87     24.87     24.87       .00       .00
SO BUILDWID 202          .00       .00       .00       .00       .00       .00
SO BUILDWID 202          .00       .00       .00       .00       .00       .00
SO BUILDWID 202          .00       .00       .00     34.48       .00       .00
SO BUILDWID 202          .00       .00       .00       .00       .00       .00
SO BUILDWID 202          .00       .00       .00       .00     50.15     49.80
SO BUILDWID 202        47.93     44.60     39.92     34.48       .00       .00
SO EMISUNIT    .100000E+07 (GRAMS/SEC)          (MICROGRAMS/CUBIC-METER)
SO SRCGROUP ALL
SO FINISHED


RE STARTING
RE GRIDCART CAR STA
RE GRIDCART CAR XYINC   64600.0   29      50.0   33100.0   13      50.0
RE GRIDCART CAR END
RE FINISHED


ME STARTING
ME INPUTFIL CLMBS70.BIN                                UNFORM
ME ANEMHGHT   10.000 METERS
ME SURFDATA  13825  1970            SURFNAME
ME UAIRDATA  13895  1970            UAIRNAME
ME WINDCATS    1.54    3.09    5.14    8.23   10.80
ME FINISHED
```

```
OU STARTING
OU RECTABLE ALLAVE FIRST  SECOND
OU MAXTABLE ALLAVE  50
OU PLOTFILE   1     ALL  FIRST  nmax70f.GRF                30
OU PLOTFILE   1     ALL  SECOND nmax70f.GRF                30
OU PLOTFILE   8     ALL  FIRST  nmax70f.GRF                30
OU PLOTFILE   8     ALL  SECOND nmax70f.GRF                30
OU FINISHED
```

NMAX70F.LST

```
NO ECHO

Line Max-32 Version 1.1

 Input File - NMAX70F.DTA
Output File - NMAX70F.LST
   Met File - CLMBS70.BIN

************************************
*** SETUP Finishes Successfully ***
************************************
```

*** MODELING OPTIONS USED: CONC RURAL FLAT DFAULT

*** MODEL SETUP OPTIONS SUMMARY ***

- -

**Model Is Setup For Calculation of Average CONCentration Values.

**Model Uses RURAL Dispersion.

**Model Uses Regulatory DEFAULT Options:

1. Final Plume Rise.
2. Stack-tip Downwash.
3. Buoyancy-induced Dispersion.
4. Use Calms Processing Routine.
5. Not Use Missing Data Processing Routine.
6. Default Wind Profile Exponents.
7. Default Vertical Potential Temperature Gradients.
8. "Upper Bound" Values for Supersquat Buildings.
9. No Exponential Decay for RURAL Mode

**Model Assumes Receptors on FLAT Terrain.

**Model Assumes No FLAGPOLE Receptor Heights.

**Model Calculates 2 Short Term Average(s) of: 1-HR 8-HR

**This Run Includes: 1 Source(s); 1 Source Group(s); and 377 Receptor(s)

**The Model Assumes A Pollutant Type of: OTHER

**Model Set To Continue RUNning After the Setup Testing.

**Output Options Selected:

Model Outputs Tables of Highest Short Term Values by Receptor (RECTABLE Keyword)
Model Outputs Tables of Overall Maximum Short Term Values (MAXTABLE Keyword)
Model Outputs External File(s) of High Values for Plotting (PLOTFILE Keyword)

**NOTE: The Following Flags May Appear Following CONC Values: c for Calm Hours
m for Missing Hours
b for Both Calm and Missing Hours

**Misc. Inputs: Anem. Hgt. (m) = 10.00 ; Decay Coef. = 0.0000 ; Rot. Angle = 0.0
Emission Units = (GRAMS/SEC) ; Emission Rate Unit Factor = 0.10000E+07
Output Units = (MICROGRAMS/CUBIC-METER)

**Input Runstream File: NMAX70F.DTA ; **Output Print File: NMAX70F.LST
**Detailed Error/Message File: nmax70f.ERR

*** MODELING OPTIONS USED: CONC RURAL FLAT DFAULT

*** POINT SOURCE DATA ***

SOURCE ID	NUMBER PART. CATS.	EMISSION RATE (USER UNITS)	X (METERS)	Y (METERS)	BASE ELEV. (METERS)	STACK HEIGHT (METERS)	STACK TEMP. (DEG.K)	STACK EXIT VEL. (M/SEC)	STACK DIAMETER (METERS)	BUILDING EXISTS	EMISSION RATE SCALAR VARY BY
202	0	0.80312E+03	65425.0	33139.0	0.0	45.72	310.93	18.29	0.76	YES	

*** MODELING OPTIONS USED: CONC RURAL FLAT DFAULT

*** SOURCE IDs DEFINING SOURCE GROUPS ***

GROUP ID	SOURCE IDs
ALL	202 ,

*** MODELING OPTIONS USED: CONC RURAL FLAT DFAULT

*** DIRECTION SPECIFIC BUILDING DIMENSIONS ***

SOURCE ID: 202

IFV	BH	BW	WAK	IFV	BH	BW	WAK	IFV	BH	BW	WAK	IFV	BH	BW	WAK	IFV	BH	BW	WAK	IFV	BH	BW	WAK
1	0.0,	0.0,	0	2	0.0,	0.0,	0	3	0.0,	0.0,	0	4	0.0,	0.0,	0	5	0.0,	0.0,	0	6	0.0,	0.0,	0
7	0.0,	0.0,	0	8	0.0,	0.0,	0	9	0.0,	0.0,	0	10	0.0,	0.0,	0	11	0.0,	0.0,	0	12	0.0,	0.0,	0
13	0.0,	0.0,	0	14	0.0,	0.0,	0	15	0.0,	0.0,	0	16	24.9,	34.5,	0	17	0.0,	0.0,	0	18	0.0,	0.0,	0
19	0.0,	0.0,	0	20	0.0,	0.0,	0	21	0.0,	0.0,	0	22	0.0,	0.0,	0	23	0.0,	0.0,	0	24	0.0,	0.0,	0
25	0.0,	0.0,	0	26	0.0,	0.0,	0	27	0.0,	0.0,	0	28	0.0,	0.0,	0	29	24.9,	50.1,	0	30	24.9,	49.8,	0
31	24.9,	47.9,	0	32	24.9,	44.6,	0	33	24.9,	39.9,	0	34	24.9,	34.5,	0	35	0.0,	0.0,	0	36	0.0,	0.0,	0

*** MODELING OPTIONS USED: CONC RURAL FLAT DFAULT

*** GRIDDED RECEPTOR NETWORK SUMMARY ***

*** NETWORK ID: CAR ; NETWORK TYPE: GRIDCART ***

*** X-COORDINATES OF GRID ***
(METERS)

64600.0,	64650.0,	64700.0,	64750.0,	64800.0,	64850.0,	64900.0,	64950.0,	65000.0,	65050.0,
65100.0,	65150.0,	65200.0,	65250.0,	65300.0,	65350.0,	65400.0,	65450.0,	65500.0,	65550.0,
65600.0,	65650.0,	65700.0,	65750.0,	65800.0,	65850.0,	65900.0,	65950.0,	66000.0,	

*** Y-COORDINATES OF GRID ***
(METERS)

33100.0,	33150.0,	33200.0,	33250.0,	33300.0,	33350.0,	33400.0,	33450.0,	33500.0,	33550.0,
33600.0,	33650.0,	33700.0,							

*** MODELING OPTIONS USED: CONC RURAL FLAT DFAULT

* SOURCE-RECEPTOR COMBINATIONS LESS THAN 1.0 METER OR 3*ZLB *
IN DISTANCE. CALCULATIONS MAY NOT BE PERFORMED.

SOURCE ID	- - RECEPTOR LOCATION - - XR (METERS)	YR (METERS)	DISTANCE (METERS)
202	65400.0	33150.0	27.31
202	65400.0	33200.0	65.92

*** MODELING OPTIONS USED: CONC RURAL FLAT DFAULT

*** METEOROLOGICAL DAYS SELECTED FOR PROCESSING ***
(1=YES; 0=NO)

```
1 1 1 1 1 1 1 1 1 1  1 1 1 1 1 1 1 1 1 1  1 1 1 1 1 1 1 1 1 1  1 1 1 1 1 1 1 1 1 1  1 1 1 1 1 1 1 1 1 1
1 1 1 1 1 1 1 1 1 1  1 1 1 1 1 1 1 1 1 1  1 1 1 1 1 1 1 1 1 1  1 1 1 1 1 1 1 1 1 1  1 1 1 1 1 1 1 1 1 1
1 1 1 1 1 1 1 1 1 1  1 1 1 1 1 1 1 1 1 1  1 1 1 1 1 1 1 1 1 1  1 1 1 1 1 1 1 1 1 1  1 1 1 1 1 1 1 1 1 1
1 1 1 1 1 1 1 1 1 1  1 1 1 1 1 1 1 1 1 1  1 1 1 1 1 1 1 1 1 1  1 1 1 1 1 1 1 1 1 1  1 1 1 1 1 1 1 1 1 1
1 1 1 1 1 1 1 1 1 1  1 1 1 1 1 1 1 1 1 1  1 1 1 1 1 1 1 1 1 1  1 1 1 1 1 1 1 1 1 1  1 1 1 1 1 1 1 1 1 1
1 1 1 1 1 1 1 1 1 1  1 1 1 1 1 1 1 1 1 1  1 1 1 1 1 1 1 1 1 1  1 1 1 1 1 1 1 1 1 1  1 1 1 1 1 1 1 1 1 1
1 1 1 1 1 1 1 1 1 1  1 1 1 1 1 1 1 1 1 1  1 1 1 1 1 1 1 1 1 1  1 1 1 1 1 1 1 1 1 1  1 1 1 1 1 1 1 1 1 1
1 1 1 1 1 1 1 1 1 1  1 1 1 1 1 1
```

NOTE: METEOROLOGICAL DATA ACTUALLY PROCESSED WILL ALSO DEPEND ON WHAT IS INCLUDED IN THE DATA FILE.

*** UPPER BOUND OF FIRST THROUGH FIFTH WIND SPEED CATEGORIES ***
(METERS/SEC)

1.54, 3.09, 5.14, 8.23, 10.80,

*** WIND PROFILE EXPONENTS ***

STABILITY	WIND SPEED CATEGORY					
CATEGORY	1	2	3	4	5	6
A	.70000E-01	.70000E-01	.70000E-01	.70000E-01	.70000E-01	.70000E-01
B	.70000E-01	.70000E-01	.70000E-01	.70000E-01	.70000E-01	.70000E-01
C	.10000E+00	.10000E+00	.10000E+00	.10000E+00	.10000E+00	.10000E+00
D	.15000E+00	.15000E+00	.15000E+00	.15000E+00	.15000E+00	.15000E+00
E	.35000E+00	.35000E+00	.35000E+00	.35000E+00	.35000E+00	.35000E+00
F	.55000E+00	.55000E+00	.55000E+00	.55000E+00	.55000E+00	.55000E+00

*** VERTICAL POTENTIAL TEMPERATURE GRADIENTS ***
(DEGREES KELVIN PER METER)

STABILITY	WIND SPEED CATEGORY					
CATEGORY	1	2	3	4	5	6
A	.00000E+00	.00000E+00	.00000E+00	.00000E+00	.00000E+00	.00000E+00
B	.00000E+00	.00000E+00	.00000E+00	.00000E+00	.00000E+00	.00000E+00
C	.00000E+00	.00000E+00	.00000E+00	.00000E+00	.00000E+00	.00000E+00
D	.00000E+00	.00000E+00	.00000E+00	.00000E+00	.00000E+00	.00000E+00
E	.20000E-01	.20000E-01	.20000E-01	.20000E-01	.20000E-01	.20000E-01
F	.35000E-01	.35000E-01	.35000E-01	.35000E-01	.35000E-01	.35000E-01

*** MODELING OPTIONS USED: CONC RURAL FLAT DFAULT

*** THE FIRST 24 HOURS OF METEOROLOGICAL DATA ***

FILE: CLMBS70.BIN
SURFACE STATION NO.: 13825
NAME: SURFNAME
YEAR: 1970

FORMAT: UNFORM
UPPER AIR STATION NO.: 13895
NAME: UAIRNAME
YEAR: 1970

YEAR	MONTH	DAY	HOUR	FLOW VECTOR	SPEED (M/S)	TEMP (K)	STAB CLASS	MIXING HEIGHT (M) RURAL	MIXING HEIGHT (M) URBAN
70	1	1	1	118.0	4.60	275.0	4	951.0	951.0
70	1	1	2	118.0	4.60	275.0	4	951.0	951.0
70	1	1	3	124.0	4.60	275.0	4	951.0	951.0
70	1	1	4	143.0	4.60	275.0	4	951.0	951.0
70	1	1	5	133.0	5.10	275.0	4	951.0	951.0
70	1	1	6	142.0	4.10	273.0	4	951.0	951.0
70	1	1	7	125.0	2.10	273.0	5	951.0	951.0
70	1	1	8	123.0	1.50	273.0	4	130.0	951.0
70	1	1	9	137.0	2.60	273.0	3	267.0	951.0
70	1	1	10	151.0	3.60	274.0	3	404.0	951.0
70	1	1	11	184.0	2.60	275.0	3	540.0	951.0
70	1	1	12	146.0	3.10	276.0	3	677.0	951.0
70	1	1	13	123.0	2.60	278.0	3	814.0	951.0
70	1	1	14	159.0	4.10	278.0	3	951.0	951.0
70	1	1	15	152.0	2.60	278.0	3	951.0	951.0
70	1	1	16	224.0	2.10	278.0	4	951.0	951.0
70	1	1	17	291.0	1.00	276.0	5	951.0	934.0
70	1	1	18	287.0	1.00	276.0	6	948.0	820.0
70	1	1	19	294.0	1.00	274.0	7	944.0	706.0
70	1	1	20	287.0	1.00	273.0	7	941.0	591.0
70	1	1	21	300.0	1.00	272.0	7	938.0	477.0
70	1	1	22	302.0	1.00	273.0	7	935.0	363.0
70	1	1	23	320.0	1.00	272.0	7	932.0	248.0
70	1	1	24	320.0	1.00	272.0	7	929.0	134.0

*** NOTES: STABILITY CLASS 1=A, 2=B, 3=C, 4=D, 5=E AND 6=F.
FLOW VECTOR IS DIRECTION TOWARD WHICH WIND IS BLOWING.

*** MODELING OPTIONS USED: CONC RURAL FLAT DFAULT

*** THE 1ST HIGHEST 1-HR AVERAGE CONCENTRATION VALUES FOR SOURCE GROUP: ALL ***
INCLUDING SOURCE(S): 202 ,

*** NETWORK ID: CAR ; NETWORK TYPE: GRIDCART ***

** CONC OF OTHER IN (MICROGRAMS/CUBIC-METER) **

Y-COORD (METERS)	X-COORD (METERS) 64600.00	64650.00	64700.00	64750.00	64800.00
33700.0	14364.33790 (70110610)	14482.83980 (70061107)	13926.55860 (70061107)	13070.46390 (70011512)	13498.69140 (70020717)
33650.0	13480.37110 (70110610)	14446.41020 (70110610)	14358.92480 (70061107)	14117.46190 (70061107)	13412.48540 (70011512)
33600.0	14215.83300 (70092109)	13068.06540 (70092109)	13948.56540 (70110610)	14177.50490 (70110610)	13809.99410 (70061107)
33550.0	14474.88180 (70032914)	14472.83400 (70092109)	13835.68260 (70092109)	13724.96880 (70091308)	14070.05180 (70030219)
33500.0	14486.24320 (70032810)	14214.21970 (70032810)	14101.82810 (70032914)	13965.49510 (70041015)	14388.53610 (70072715)
33450.0	14125.15630 (70041011)	14304.83500 (70041011)	13849.62210 (70032810)	14127.15630 (70041622)	14686.14550 (70050713)
33400.0	13964.88480 (70062519)	13492.88380 (70010517)	13914.99410 (70100803)	14312.27150 (70052818)	14672.58110 (70032718)
33350.0	13856.11520 (70062519)	13978.24710 (70062519)	14036.57130 (70011711)	14280.94920 (70033108)	14826.71680 (70010517)
33300.0	14843.01950 (70030711)	13323.69040 (70051908)	14065.08980 (70032710)	14750.54490 (70032710)	15282.28710 (70042117)
33250.0	20185.59180 (70030711)	18647.15040 (70030711)	16684.56640 (70030711)	14878.71000 (70052417)	15287.00780 (70052417)
33200.0	19986.56450 (70030711)	19124.84770 (70030711)	17881.17380 (70030711)	16223.18360 (70030711)	15408.10250 (70072512)
33150.0	14251.08110 (70030711)	13597.34770 (70030711)	14051.67190 (70052009)	14674.58690 (70052009)	15104.10840 (70052009)
33100.0	13148.04880 (70051818)	13293.42870 (70052009)	13970.23630 (70052009)	14529.25200 (70052009)	14875.98540 (70052009)

*** MODELING OPTIONS USED: CONC RURAL FLAT DFAULT

*** THE 1ST HIGHEST 1-HR AVERAGE CONCENTRATION VALUES FOR SOURCE GROUP: ALL ***
INCLUDING SOURCE(S): 202 ,

*** NETWORK ID: CAR ; NETWORK TYPE: GRIDCART ***

** CONC OF OTHER IN (MICROGRAMS/CUBIC-METER) **

Y-COORD (METERS)	X-COORD (METERS) 64850.00	64900.00	64950.00	65000.00	65050.00
33700.0	14076.20510 (70020717)	14521.47460 (70121511)	13983.67480 (70042905)	14634.32710 (70052116)	14865.95510 (70020615)
33650.0	13883.03810 (70051105)	13985.13770 (70042819)	15047.77540 (70121511)	14676.62110 (70072412)	15348.41310 (70052116)
33600.0	13983.58200 (70041619)	14660.59380 (70041516)	14750.40820 (70092019)	15573.77540 (70121511)	15483.97750 (70042706)
33550.0	14579.49710 (70092011)	14991.78710 (70062413)	15323.51660 (70041516)	15968.85160 (70092019)	16075.90040 (70121511)
33500.0	14948.86430 (70040313)	15348.37600 (70082711)	15578.92290 (70062413)	15946.45310 (70091921)	17423.49610 (70092019)
33450.0	15191.83200 (70091311)	15526.64550 (70071215)	15731.64940 (70030219)	16159.83110 (70041621)	17525.26950 (70091921)
33400.0	15061.10550 (70031110)	15569.72560 (70050713)	15995.17380 (70100701)	16388.13870 (70011624)	17978.30270 (70051420)
33350.0	15305.97750 (70100803)	15767.30960 (70041808)	16250.34080 (70031110)	17375.03520 (70080122)	18034.75980 (70083002)
33300.0	15405.15430 (70011711)	15527.18070 (70033108)	16414.37890 (70010517)	16965.05470 (70052818)	17561.52540 (70032718)
33250.0	15496.68750 (70051908)	15359.61620 (70051908)	14476.94430 (70032710)	16429.01950 (70052211)	17708.18950 (70011711)
33200.0	15517.08790 (70121412)	15252.32810 (70121412)	14224.72660 (70121412)	15166.20210 (70063016)	15648.55080 (70052211)
33150.0	15208.42680 (70052009)	14810.52050 (70052009)	15098.65230 (70063016)	16950.65820 (70063016)	17774.03320 (70063016)
33100.0	14877.41500 (70052009)	14359.90430 (70052009)	14839.50880 (70072912)	16772.90820 (70072912)	17717.82230 (70072912)

*** MODELING OPTIONS USED: CONC RURAL FLAT DFAULT

*** THE 1ST HIGHEST 1-HR AVERAGE CONCENTRATION VALUES FOR SOURCE GROUP: ALL ***
INCLUDING SOURCE(S): 202 ,

*** NETWORK ID: CAR ; NETWORK TYPE: GRIDCART ***

** CONC OF OTHER IN (MICROGRAMS/CUBIC-METER) **

Y-COORD (METERS)	X-COORD (METERS) 65100.00	65150.00	65200.00	65250.00	65300.00
33700.0	15199.93460 (70092509)	15389.25490 (70072515)	15496.52340 (70042914)	17219.91800 (70121605)	17148.48050 (70121605)
33650.0	15370.03710 (70092509)	15451.72560 (70072515)	16047.87890 (70090221)	16031.18460 (70121101)	20425.49020 (70121605)
33600.0	15556.77640 (70020615)	16088.70700 (70091801)	16324.56840 (70020523)	15612.69140 (70111804)	22391.17970 (70121605)
33550.0	17142.08980 (70092120)	16507.14840 (70041307)	16812.12300 (70081523)	17147.63480 (70090221)	21238.78710 (70121605)
33500.0	16842.79100 (70081524)	18195.36520 (70092120)	17357.63870 (70051106)	17745.23440 (70080224)	19803.12110 (70080904)
33450.0	19161.40820 (70092019)	18230.16020 (70081524)	18764.17970 (70082924)	19954.30080 (70061603)	20507.73440 (70071303)
33400.0	18581.89650 (70081922)	21204.36520 (70092019)	18418.79880 (70042905)	20506.41210 (70082924)	22473.99020 (70092302)
33350.0	19633.40430 (70061302)	21247.33200 (70092022)	23453.53130 (70092019)	22844.22660 (70061220)	24150.45900 (70091801)
33300.0	20849.36130 (70080122)	19502.71090 (70022808)	24531.53710 (70051420)	23550.05860 (70082923)	21067.54690 (70092120)
33250.0	18445.60940 (70010517)	21136.54490 (70101302)	26542.01370 (70080122)	18278.96880 (70061302)	18223.45120 (70092219)
33200.0	15659.25880 (70052211)	14686.73240 (70011711)	17452.35350 (70100721)	18958.24020 (70091524)	15354.94630 (70091523)
33150.0	16727.53520 (70063016)	12827.83400 (70063016)	9806.50391 (70070611)	4882.89404 (70070614)	1787.49329 (70082912)
33100.0	16830.31840 (70072912)	13620.97850 (70051911)	10170.78710 (70033112)	5070.42822 (70052210)	625.78931 (70052210)

*** MODELING OPTIONS USED: CONC RURAL FLAT DFAULT

*** THE 1ST HIGHEST 1-HR AVERAGE CONCENTRATION VALUES FOR SOURCE GROUP: ALL ***
INCLUDING SOURCE(S): 202 ,

*** NETWORK ID: CAR ; NETWORK TYPE: GRIDCART ***

** CONC OF OTHER IN (MICROGRAMS/CUBIC-METER) **

Y-COORD (METERS)	X-COORD (METERS) 65350.00	65400.00	65450.00	65500.00	65550.00
33700.0	15339.63380 (70072714)	15366.03220 (70030912)	15366.04200 (70022211)	15399.39260 (70070716)	15573.69630 (70081617)
33650.0	14858.15530 (70070717)	14882.11130 (70030912)	14882.11820 (70022211)	15050.75490 (70070716)	15225.79390 (70071317)
33600.0	15448.16990 (70082211)	15667.97850 (70072411)	15634.30080 (70061612)	14333.92970 (70061612)	14087.79590 (70071317)
33550.0	17078.20120 (70082211)	17292.75200 (70072411)	17290.94340 (70061612)	15361.79000 (70061612)	16079.36040 (70072712)
33500.0	18856.15430 (70121605)	17743.52730 (70082611)	17743.52930 (70061612)	15053.13480 (70061612)	17568.79880 (70072712)
33450.0	26117.47270 (70121605)	15934.64650 (70082611)	15934.64450 (70061612)	14048.32320 (70072712)	17121.60940 (70072712)
33400.0	28511.51560 (70121605)	12245.06740 (70081511)	12847.18260 (70051313)	12616.34380 (70062412)	14042.83010 (70061411)
33350.0	20311.66600 (70080904)	8690.85840 (70081511)	8752.64551 (70080311)	9759.68066 (70062113)	11385.91020 (70071313)
33300.0	17871.41410 (70082622)	7637.06738 (70121605)	3369.25757 (70070711)	4987.70459 (70061713)	7885.21289 (70071410)
33250.0	15526.14750 (70092121)	10104.64940 (70121605)	213.94620 (70061714)	1068.43347 (70081613)	3940.02563 (70052212)
33200.0	10270.66600 (70061122)	0.01799 (70072414)	0.01884 (70072712)	23.54095 (70052212)	1397.19690 (70050712)
33150.0	1263.72314 (70060215)	0.00000 (0)	0.00000 (0)	0.41061 (70062010)	599.94604 (70062010)
33100.0	3.27935 (70051812)	0.00000 (70092912)	0.00000 (70070913)	5.43840 (70071613)	837.46588 (70050513)

*** MODELING OPTIONS USED: CONC RURAL FLAT DFAULT

*** THE 1ST HIGHEST 1-HR AVERAGE CONCENTRATION VALUES FOR SOURCE GROUP: ALL ***
INCLUDING SOURCE(S): 202 ,

*** NETWORK ID: CAR ; NETWORK TYPE: GRIDCART ***

** CONC OF OTHER IN (MICROGRAMS/CUBIC-METER) **

Y-COORD (METERS)	X-COORD (METERS) 65600.00	65650.00	65700.00	65750.00	65800.00
33700.0	14647.97170 (70071317)	14107.56050 (70073110)	15457.28420 (70073110)	15199.93460 (70060916)	14993.40720 (70091210)
33650.0	13842.22750 (70061016)	15101.26270 (70073110)	15552.62990 (70042413)	15538.32910 (70072914)	15388.29390 (70060909)
33600.0	14355.21190 (70072712)	15026.63570 (70073110)	15359.06930 (70060916)	15556.77540 (70031815)	14873.95700 (70071909)
33550.0	16058.67870 (70072712)	15385.52340 (70090812)	14642.26370 (70091210)	14744.09180 (70060909)	15509.66020 (70071909)
33500.0	17026.23630 (70090812)	16783.90430 (70073012)	15392.38960 (70073011)	14630.51950 (70073011)	15150.25780 (70071508)
33450.0	17683.75200 (70090812)	16496.17770 (70073011)	17215.95510 (70073011)	14954.21680 (70073011)	14426.60160 (70062115)
33400.0	15439.80860 (70073012)	17451.61330 (70073011)	16342.31450 (70073011)	16146.14650 (70071912)	15828.05370 (70071912)
33350.0	13660.20120 (70080211)	14579.02250 (70060813)	16919.30270 (70071912)	17644.07620 (70071912)	16686.02150 (70061614)
33300.0	10320.67770 (70071911)	13432.00980 (70080412)	16354.09770 (70061614)	16844.24020 (70071113)	17305.82620 (70071113)
33250.0	7965.18848 (70070712)	11414.89550 (70070712)	14764.88570 (70071113)	17360.48050 (70090611)	17062.52150 (70090611)
33200.0	5726.33105 (70072711)	9626.08984 (70071914)	13949.57230 (70060811)	16892.25200 (70091214)	17390.21880 (70091214)
33150.0	4703.57178 (70062010)	9921.53711 (70070910)	13813.73140 (70052512)	15397.09960 (70052512)	16262.97660 (70090112)
33100.0	5411.43945 (70050513)	10152.10940 (70090711)	13070.50490 (70062211)	16454.20900 (70090112)	17590.55270 (70090112)

*** MODELING OPTIONS USED: CONC RURAL FLAT DFAULT

*** THE 1ST HIGHEST 1-HR AVERAGE CONCENTRATION VALUES FOR SOURCE GROUP: ALL ***
INCLUDING SOURCE(S): 202 ,

*** NETWORK ID: CAR ; NETWORK TYPE: GRIDCART ***

** CONC OF OTHER IN (MICROGRAMS/CUBIC-METER) **

Y-COORD (METERS)	X-COORD (METERS) 65850.00	65900.00	65950.00	66000.00
33700.0	14524.78320 (70060909)	13945.47270 (70071909)	13595.35740 (70071909)	13135.65820 (70071508)
33650.0	14676.61230 (70071909)	14646.70210 (70071909)	14227.88380 (70071508)	13275.10160 (70073009)
33600.0	15403.73830 (70071909)	15137.98050 (70071508)	14264.41990 (70062115)	14161.76560 (70062115)
33550.0	15593.42290 (70071508)	15130.96970 (70062115)	15011.11720 (70062115)	14392.00680 (70081510)
33500.0	15371.63570 (70062115)	15310.33890 (70062115)	15346.05960 (70081510)	19425.05860 (70100914)
33450.0	14832.58500 (70081510)	15518.99710 (70081510)	20385.02340 (70100914)	23730.00200 (70100914)
33400.0	14258.92580 (70081510)	18818.68950 (70100914)	20653.23830 (70100914)	19493.99020 (70100914)
33350.0	14363.65040 (70071113)	15046.12400 (70111315)	14740.88280 (70111315)	13573.17480 (70111315)
33300.0	15928.07130 (70090611)	13928.81350 (70090611)	13778.13570 (70100213)	14449.19820 (70092513)
33250.0	16202.18260 (70091214)	14530.13090 (70091214)	15359.61820 (70092513)	15496.68550 (70092513)
33200.0	16174.26950 (70091214)	14095.78710 (70070908)	15230.53220 (70070908)	15595.32030 (70070908)
33150.0	15619.38870 (70090112)	13989.57030 (70090112)	13871.84380 (70080813)	14313.23730 (70122711)
33100.0	16843.66990 (70090112)	15036.09470 (70090112)	15231.22460 (70090209)	15591.91500 (70090209)

*** MODELING OPTIONS USED: CONC RURAL FLAT DFAULT

*** THE 2ND HIGHEST 1-HR AVERAGE CONCENTRATION VALUES FOR SOURCE GROUP: ALL ***
INCLUDING SOURCE(S): 202 ,

*** NETWORK ID: CAR ; NETWORK TYPE: GRIDCART ***

** CONC OF OTHER IN (MICROGRAMS/CUBIC-METER) **

Y-COORD (METERS)	X-COORD (METERS) 64600.00	64650.00	64700.00	64750.00	64800.00
33700.0	13740.68750 (70061107)	13768.69820 (70110610)	12786.07130 (70041619)	13070.46390 (70092316)	13382.80860 (70051105)
33650.0	12415.96000 (70011624)	13208.51560 (70061107)	14218.38380 (70110610)	13327.71390 (70090819)	13412.48540 (70092316)
33600.0	12597.89940 (70100701)	12897.13280 (70091308)	13154.48050 (70011624)	13667.89160 (70061107)	13809.98630 (70041621)
33550.0	14474.88180 (70052118)	13739.82710 (70032914)	13349.73930 (70022808)	13585.80860 (70011624)	13922.06930 (70011704)
33500.0	13984.93360 (70041011)	14195.74410 (70032914)	14101.82810 (70052118)	13965.49510 (70072309)	14388.53610 (70072812)
33450.0	13021.76270 (70052818)	13439.60450 (70032810)	13764.40820 (70032718)	14127.15630 (70091707)	14448.73630 (70011621)
33400.0	13110.76660 (70033108)	13398.10060 (70033108)	13658.94240 (70010517)	13999.06450 (70041808)	14526.04490 (70041808)
33350.0	13052.98830 (70091218)	13419.64550 (70011711)	13579.18950 (70062519)	14280.94920 (70122820)	14688.86520 (70033108)
33300.0	12952.03810 (70051918)	13215.60250 (70051918)	14061.72270 (70051908)	14736.09570 (70042117)	15282.28710 (70052011)
33250.0	13761.05270 (70032811)	13408.08400 (70052417)	14212.91210 (70052417)	14424.66310 (70121412)	15063.11040 (70051908)
33200.0	14147.19240 (70052018)	13803.29390 (70052018)	14302.60940 (70072512)	14961.69820 (70072512)	15408.10250 (70121414)
33150.0	13304.88180 (70072718)	13326.94240 (70052009)	13542.78910 (70041012)	14201.51760 (70041012)	14684.86230 (70041012)
33100.0	12562.73730 (70052009)	13230.63480 (70051818)	13123.26860 (70051818)	12763.63570 (70051818)	12832.20410 (70031614)

*** MODELING OPTIONS USED: CONC RURAL FLAT DFAULT

*** THE 2ND HIGHEST 1-HR AVERAGE CONCENTRATION VALUES FOR SOURCE GROUP: ALL ***
INCLUDING SOURCE(S): 202 ,

*** NETWORK ID: CAR ; NETWORK TYPE: GRIDCART ***

** CONC OF OTHER IN (MICROGRAMS/CUBIC-METER) **

Y-COORD (METERS)	X-COORD (METERS) 64850.00	64900.00	64950.00	65000.00	65050.00
33700.0	13997.24610 (70081418)	13946.00100 (70020606)	13945.47850 (70072412)	14249.32620 (70020615)	14719.20800 (70041307)
33650.0	13883.03810 (70102617)	13985.13770 (70061519)	14646.69820 (70072412)	14584.95800 (70042706)	15252.67680 (70020615)
33600.0	13983.58200 (70060213)	14499.01460 (70061606)	14744.44820 (70041516)	15403.73540 (70072412)	15483.97750 (70053010)
33550.0	14569.91800 (70082711)	14991.78710 (70091414)	15292.21190 (70092219)	15229.28420 (70041516)	15802.01560 (70060103)
33500.0	14948.86430 (70081415)	15175.81930 (70092011)	15578.92290 (70091414)	15946.45310 (70092220)	15859.11910 (70121011)
33450.0	15050.10640 (70050713)	15501.60740 (70072715)	15469.95800 (70011704)	15912.64060 (70031707)	17525.26950 (70092220)
33400.0	15060.71580 (70033117)	15482.62990 (70011621)	15729.67290 (70041015)	16388.13870 (70042917)	16953.66990 (70042918)
33350.0	14991.07420 (70052818)	15405.73830 (70052818)	16250.22660 (70033117)	16680.53710 (70011621)	17232.61130 (70100701)
33300.0	15345.66310 (70042117)	15527.18070 (70122820)	16204.98630 (70033108)	16730.27730 (70100803)	17350.60550 (70022112)
33250.0	15273.59180 (70052417)	15263.00000 (70032710)	14421.08790 (70042117)	16314.60740 (70011711)	17638.14840 (70052211)
33200.0	15497.53910 (70072512)	15039.08010 (70072512)	14010.29200 (70052417)	14214.71480 (70052211)	15358.38180 (70063016)
33150.0	14864.12110 (70041012)	14563.33400 (70041012)	13824.58400 (70011414)	13899.33110 (70072912)	14413.28910 (70072912)
33100.0	13458.17770 (70031614)	13795.87010 (70031614)	13721.26560 (70081713)	14917.05470 (70041513)	16056.15530 (70041513)

*** MODELING OPTIONS USED: CONC RURAL FLAT DFAULT

*** THE 2ND HIGHEST 1-HR AVERAGE CONCENTRATION VALUES FOR SOURCE GROUP: ALL ***
INCLUDING SOURCE(S): 202 ,

*** NETWORK ID: CAR ; NETWORK TYPE: GRIDCART ***

** CONC OF OTHER IN (MICROGRAMS/CUBIC-METER) **

Y-COORD (METERS)	X-COORD (METERS) 65100.00	65150.00	65200.00	65250.00	65300.00
33700.0	14979.56540 (70112817)	15349.24710 (70061008)	15165.99220 (70111804)	15587.89840 (70072615)	15409.16700 (70081517)
33650.0	15287.07420 (70051106)	15172.55960 (70081523)	15822.24800 (70020208)	15658.73140 (70080904)	15463.55470 (70081001)
33600.0	15554.94240 (70082924)	16054.82320 (70020521)	16324.56840 (70111809)	15184.91600 (70030411)	16707.09180 (70081001)
33550.0	16153.53610 (70051015)	16507.14840 (70101203)	16039.55760 (70112817)	17088.41020 (70092407)	17302.13670 (70121107)
33500.0	16627.92580 (70060103)	16770.31840 (70051015)	17280.44340 (70091801)	17745.23440 (70082922)	17949.22850 (70121101)
33450.0	16792.73830 (70121011)	17380.88480 (70042905)	17920.98240 (70100517)	18979.62110 (70092006)	18162.01560 (70111804)
33400.0	17671.68950 (70071301)	17872.94140 (70121011)	18329.87700 (70081524)	19604.09380 (70041307)	21141.14450 (70080224)
33350.0	17875.14450 (70030219)	20116.83200 (70042923)	21393.77730 (70082923)	21616.86130 (70061624)	22838.01950 (70061603)
33300.0	18712.17970 (70091805)	19502.71090 (70082708)	21748.65230 (70061204)	21468.41800 (70092019)	20760.89650 (70092301)
33250.0	18099.18950 (70033108)	19834.69920 (70041808)	23586.81050 (70091805)	17268.18750 (70073005)	17685.54880 (70082923)
33200.0	15180.34380 (70052111)	14249.21190 (70100721)	17293.50980 (70011711)	18058.68950 (70042121)	14653.76760 (70080122)
33150.0	13971.65430 (70052111)	12633.51270 (70052111)	9510.58691 (70070614)	4587.68506 (70070611)	1624.07727 (70051912)
33100.0	15617.19430 (70041513)	13046.81250 (70072912)	10059.04690 (70052210)	4886.12695 (70033112)	551.67249 (70051812)

*** MODELING OPTIONS USED: CONC RURAL FLAT DFAULT

*** THE 2ND HIGHEST 1-HR AVERAGE CONCENTRATION VALUES FOR SOURCE GROUP: ALL ***
INCLUDING SOURCE(S): 202 ,

*** NETWORK ID: CAR ; NETWORK TYPE: GRIDCART ***

** CONC OF OTHER IN (MICROGRAMS/CUBIC-METER) **

Y-COORD (METERS)	X-COORD (METERS) 65350.00	65400.00	65450.00	65500.00	65550.00
33700.0	15339.63380 (70083009)	15339.20800 (70050715)	15031.52930 (70061409)	14977.14360 (70061409)	15409.17580 (70071317)
33650.0	14627.02440 (70072714)	14732.53520 (70050715)	14601.72560 (70061409)	14166.56930 (70061409)	15183.91990 (70081617)
33600.0	15241.09380 (70050511)	15634.29880 (70082611)	15616.61330 (70073113)	13855.28220 (70070716)	13850.63280 (70120914)
33550.0	16645.28320 (70050511)	17290.94140 (70082611)	17200.03320 (70073113)	14151.44240 (70073113)	12831.30270 (70120914)
33500.0	17417.11330 (70082211)	17698.44920 (70072411)	17556.35350 (70073113)	13987.84570 (70072712)	14335.59960 (70061411)
33450.0	18515.71480 (70081001)	15861.80180 (70051510)	15648.65040 (70073113)	13091.43950 (70060910)	15465.12890 (70061411)
33400.0	22717.81840 (70091320)	11602.52150 (70070713)	12495.75490 (70071314)	12485.23050 (70062113)	13716.64840 (70090812)
33350.0	17009.41600 (70030411)	8535.51074 (70071310)	8690.85645 (70071111)	9498.36621 (70060411)	11172.08300 (70073013)
33300.0	17351.34570 (70090221)	5206.52051 (70051111)	3204.83521 (70050512)	4863.61865 (70070911)	7863.58936 (70052213)
33250.0	15091.31540 (70061522)	7368.24072 (70043022)	206.11774 (70071413)	1040.41211 (70071410)	3364.45117 (70071911)
33200.0	10270.66600 (70061521)	0.01749 (70063010)	0.01527 (70060411)	16.80379 (70071112)	1107.53918 (70070712)
33150.0	1257.71375 (70101120)	0.00000 (0)	0.00000 (0)	0.41061 (70080111)	599.94604 (70080111)
33100.0	2.00346 (70042111)	0.00000 (70040712)	0.00000 (70081411)	3.28170 (70052513)	686.84906 (70052513)

*** MODELING OPTIONS USED: CONC RURAL FLAT DFAULT

*** THE 2ND HIGHEST 1-HR AVERAGE CONCENTRATION VALUES FOR SOURCE GROUP: ALL ***
INCLUDING SOURCE(S): 202 ,

*** NETWORK ID: CAR ; NETWORK TYPE: GRIDCART ***

** CONC OF OTHER IN (MICROGRAMS/CUBIC-METER) **

Y-COORD (METERS)	X-COORD (METERS) 65600.00	65650.00	65700.00	65750.00	65800.00
33700.0	14023.13090 (70081617)	13164.78610 (70090815)	14739.19820 (70042413)	15170.40140 (70042413)	14993.40720 (70092209)
33650.0	13508.09860 (70082212)	13695.83690 (70013114)	15141.82810 (70073110)	15370.03810 (70060916)	15252.67190 (70031815)
33600.0	13932.97750 (70082212)	14295.41110 (70042413)	15241.74220 (70072914)	15556.77540 (70092514)	14745.84280 (70060909)
33550.0	14751.46000 (70090812)	15318.61820 (70073012)	14642.26370 (70092209)	14281.71480 (70031815)	14413.38480 (70071508)
33500.0	16687.17190 (70073012)	16561.87300 (70090812)	13802.69040 (70073012)	14424.54000 (70071909)	13792.62700 (70071909)
33450.0	17670.72660 (70073012)	16113.56050 (70073012)	13510.21580 (70060813)	13215.30370 (70071508)	13777.22070 (70091216)
33400.0	15166.19920 (70071313)	15202.92970 (70060813)	14266.26270 (70060813)	14543.25390 (70061614)	15234.24610 (70061614)
33350.0	13349.83980 (70060813)	14240.11520 (70073011)	15556.35550 (70061614)	17501.59570 (70061614)	15848.06840 (70071912)
33300.0	10184.10940 (70060813)	12886.48240 (70071912)	15767.92870 (70071912)	16844.24020 (70080512)	17305.82620 (70080512)
33250.0	7929.12939 (70071112)	10869.95700 (70080412)	14764.88570 (70080512)	16951.45120 (70071113)	16698.88090 (70091214)
33200.0	5677.20850 (70050712)	9606.74609 (70072711)	13467.04390 (70091214)	15450.54490 (70060811)	14697.91410 (70060811)
33150.0	4703.57178 (70080111)	9850.36035 (70082013)	13554.63770 (70082612)	15141.99710 (70090112)	14777.44040 (70052512)
33100.0	5038.34082 (70090711)	9551.20215 (70070912)	12770.45610 (70072413)	16033.55270 (70072413)	16559.98830 (70072413)

*** MODELING OPTIONS USED: CONC RURAL FLAT DFAULT

*** THE 2ND HIGHEST 1-HR AVERAGE CONCENTRATION VALUES FOR SOURCE GROUP: ALL ***
INCLUDING SOURCE(S): 202 ,

*** NETWORK ID: CAR ; NETWORK TYPE: GRIDCART ***

** CONC OF OTHER IN (MICROGRAMS/CUBIC-METER) **

Y-COORD (METERS)	X-COORD (METERS) 65850.00	65900.00	65950.00	66000.00
33700.0	14249.31930 (70031815)	12883.15140 (70080217)	13085.12110 (70051408)	12698.04200 (70051408)
33650.0	13932.40530 (70060909)	13922.37890 (70071508)	13092.59280 (70071909)	13232.16990 (70071508)
33600.0	14495.46680 (70071508)	13894.20120 (70071909)	14088.20800 (70071508)	13245.20310 (70091908)
33550.0	14263.18070 (70071909)	14593.28810 (70071508)	13720.15140 (70081510)	13622.24220 (70062115)
33500.0	14400.33590 (70071508)	14683.11720 (70081510)	13935.13180 (70122614)	14648.32810 (70081510)
33450.0	14580.90820 (70062115)	14299.54200 (70100914)	14569.60840 (70081510)	15050.11520 (70080711)
33400.0	14104.21290 (70061614)	15139.41020 (70080711)	15569.72170 (70080711)	15382.23340 (70111315)
33350.0	14363.65040 (70080512)	14370.21580 (70080711)	13567.40430 (70080314)	13001.65820 (70080314)
33300.0	15884.44920 (70071113)	13727.68460 (70100213)	13693.91110 (70071509)	13254.35350 (70071509)
33250.0	15262.19240 (70090611)	14371.96000 (70092513)	12644.44140 (70071509)	13586.28910 (70070908)
33200.0	12937.86720 (70060811)	14095.78710 (70071309)	15230.53220 (70071309)	15595.32030 (70071309)
33150.0	13136.41500 (70052512)	13798.22560 (70080813)	13777.26760 (70122711)	13600.88670 (70070908)
33100.0	15443.37890 (70072413)	14126.44040 (70090209)	14976.61330 (70080613)	15201.55860 (70080613)

*** MODELING OPTIONS USED: CONC RURAL FLAT DFAULT

*** THE 1ST HIGHEST 8-HR AVERAGE CONCENTRATION VALUES FOR SOURCE GROUP: ALL ***
INCLUDING SOURCE(S): 202 ,

*** NETWORK ID: CAR ; NETWORK TYPE: GRIDCART ***

** CONC OF OTHER IN (MICROGRAMS/CUBIC-METER) **

Y-COORD (METERS)	X-COORD (METERS) 64600.00	64650.00	64700.00	64750.00	64800.00
33700.0	5166.97949 (70042924)	4920.99707 (70042924)	4808.98730 (70123024)	5383.11182 (70123024)	4639.71631 (70123024)
33650.0	5156.35547 (70042924)	5408.16846 (70042924)	5360.06836 (70042924)	4881.84375 (70041624)	5639.64355 (70123024)
33600.0	6566.88477 (70100708)	5678.87500c(70111908)	5582.95654 (70042924)	5728.15527 (70042924)	5250.56104 (70042924)
33550.0	7354.94189 (70100708)	7532.18311 (70100708)	6868.51221 (70100708)	5805.82666c(70111908)	6024.10693 (70042924)
33500.0	5736.02246 (70100708)	7030.08936 (70100708)	7984.58447 (70100708)	8123.14209 (70100708)	7087.01318 (70100708)
33450.0	4281.48438c(70010524)	4495.58398c(70032816)	5868.95264 (70100708)	7494.27100 (70100708)	8714.35352 (70100708)
33400.0	4828.95557c(70010524)	4992.18896c(70010524)	4844.22900c(70010524)	4372.97070 (70033116)	5879.39307 (70100708)
33350.0	3612.53687 (70082916)	4010.97852 (70082916)	4401.60791 (70082916)	4933.00830c(70010524)	5247.60645c(70010524)
33300.0	3826.29565c(70121416)	3798.85181c(70121416)	3787.69336 (70082916)	4276.29492 (70082916)	4770.57178 (70082916)
33250.0	4809.27246c(70121416)	4952.16113c(70121416)	5037.15723c(70121416)	5036.81396c(70121416)	4917.16650c(70121416)
33200.0	5086.42432c(70121416)	5354.16455c(70121416)	5591.69629c(70121416)	5772.26660c(70121416)	5857.82666c(70121416)
33150.0	4424.07568c(70121416)	4666.26465c(70121416)	4888.49707c(70121416)	5069.59082c(70121416)	5178.55518c(70121416)
33100.0	3693.08472 (70031616)	3980.99512 (70031616)	4281.68750 (70031616)	4585.16406 (70031616)	4873.41797 (70031616)

*** MODELING OPTIONS USED: CONC RURAL FLAT DFAULT

*** THE 1ST HIGHEST 8-HR AVERAGE CONCENTRATION VALUES FOR SOURCE GROUP: ALL ***
INCLUDING SOURCE(S): 202 ,

*** NETWORK ID: CAR ; NETWORK TYPE: GRIDCART ***

** CONC OF OTHER IN (MICROGRAMS/CUBIC-METER) **

Y-COORD (METERS)	X-COORD (METERS) 64850.00	64900.00	64950.00	65000.00	65050.00
33700.0	4793.99805 (70042824)	4898.44580 (70121516)	5569.99463 (70011108)	6573.09961 (70011108)	6312.50488 (70102816)
33650.0	5132.72754c(70041516)	5295.77832c(70041516)	5209.45117 (70121516)	6237.13818 (70011108)	6678.02637 (70011108)
33600.0	5831.24951 (70123024)	5852.74316c(70041516)	6041.24219c(70041516)	5629.25879c(70041516)	6972.18652 (70011108)
33550.0	5926.74121 (70042924)	5909.41797c(70041516)	6660.59229c(70041516)	6858.99561c(70041516)	6231.79248c(70041516)
33500.0	6208.86328 (70042924)	6460.33105 (70042924)	6592.90625c(70041516)	7508.70654c(70041516)	7662.57422c(70041516)
33450.0	8765.19336 (70100708)	7209.29541c(70111908)	6918.42725 (70042924)	7209.42432c(70041516)	8223.26367c(70041516)
33400.0	7958.01367 (70100708)	9580.71094 (70100708)	9439.94043 (70100708)	7289.58643c(70111908)	7598.81982 (70052916)
33350.0	5083.51904 (70082916)	5672.39355 (70100708)	8371.70703 (70100708)	10653.42680 (70100708)	10077.29300 (70100708)
33300.0	5219.51514 (70082916)	5541.79443 (70082916)	5766.90918 (70100624)	5724.50049 (70100624)	8609.75195 (70100708)
33250.0	4639.83252c(70121416)	4643.40381 (70082916)	5070.92383 (70082916)	5306.30566 (70082916)	5893.26855c(70051916)
33200.0	5797.01123c(70121416)	5526.09619c(70121416)	4978.11719c(70121416)	4109.35986c(70121416)	4382.78662 (70052116)
33150.0	5172.04199c(70121416)	4993.54150c(70121416)	4770.40039 (70031616)	4479.70898 (70031616)	4093.92017c(70071216)
33100.0	5115.87305 (70031616)	5263.14990 (70031616)	5240.20166 (70031616)	4943.83643 (70031616)	4320.45166 (70031616)

*** MODELING OPTIONS USED: CONC RURAL FLAT DFAULT

*** THE 1ST HIGHEST 8-HR AVERAGE CONCENTRATION VALUES FOR SOURCE GROUP: ALL ***
INCLUDING SOURCE(S): 202 ,

*** NETWORK ID: CAR ; NETWORK TYPE: GRIDCART ***

** CONC OF OTHER IN (MICROGRAMS/CUBIC-METER) **

Y-COORD (METERS)	X-COORD (METERS) 65100.00	65150.00	65200.00	65250.00	65300.00
33700.0	8719.72949 (70042308)	6735.89307 (70091716)	5905.17969 (70091716)	6128.24805 (70111916)	5987.02783c(70072616)
33650.0	7680.39746 (70042308)	8735.62109 (70042308)	6685.19434 (70091716)	6271.13379 (70111916)	6104.15820c(70072616)
33600.0	7285.60596 (70102816)	9461.21777 (70042308)	7160.83887 (70091716)	6114.75537 (70042808)	6423.40625 (70111916)
33550.0	7718.30664 (70011108)	7616.46094 (70102816)	10039.99320 (70042308)	6746.32959 (70042808)	7355.79297 (70111916)
33500.0	6658.20459c(70041516)	8317.13477 (70011108)	9831.22168 (70042308)	7939.54443 (70042308)	7616.65283 (70111916)
33450.0	8164.76221c(70041516)	6920.95557 (70121516)	9042.75488 (70102816)	11770.13280 (70042308)	7890.85449 (70042808)
33400.0	8404.31836c(70041516)	7999.59521c(70041516)	7918.06104 (70011108)	9996.84961 (70102816)	9220.96387 (70042308)
33350.0	8190.60156 (70042924)	8013.58154 (70052916)	7961.74609 (70100616)	9997.07520 (70011108)	12901.76170 (70042308)
33300.0	12090.61520 (70100708)	10660.50980 (70100708)	9599.49707 (70042924)	8113.66406 (70100616)	9170.69531 (70102816)
33250.0	7069.73193 (70100624)	8465.33203 (70100708)	14342.40140 (70100708)	8012.13428 (70042924)	6185.42090 (70100616)
33200.0	4609.91797 (70052116)	4484.35205c(70051916)	5858.79492 (70100624)	7565.48779 (70100624)	7296.81494 (70100708)
33150.0	4266.41504c(70071216)	3959.32422c(70071216)	2954.37036c(70071216)	1343.91687c(70071216)	443.44196c(70051916)
33100.0	4557.79639c(70071216)	4265.11426c(70071216)	3188.77100c(70071216)	1438.76587c(70071216)	148.72354c(70071216)

*** MODELING OPTIONS USED: CONC RURAL FLAT DFAULT

*** THE 1ST HIGHEST 8-HR AVERAGE CONCENTRATION VALUES FOR SOURCE GROUP: ALL ***
INCLUDING SOURCE(S): 202 ,

*** NETWORK ID: CAR ; NETWORK TYPE: GRIDCART ***

** CONC OF OTHER IN (MICROGRAMS/CUBIC-METER) **

Y-COORD (METERS)	X-COORD (METERS) 65350.00	65400.00	65450.00	65500.00	65550.00
33700.0	6740.75537c(70072616)	6656.37695c(70072616)	5504.96924c(70072616)	5326.68799 (70061016)	5839.80469 (70061016)
33650.0	7139.21924c(70072616)	7174.97510c(70072616)	5850.30664c(70072616)	5711.77051 (70061016)	6228.72412 (70061016)
33600.0	7271.01172c(70072616)	7485.24463c(70072616)	5997.99463c(70072616)	5958.74219 (70061016)	6422.00098 (70061016)
33550.0	6961.88086c(70072616)	7414.27930c(70072616)	5815.79541c(70072616)	5925.39014 (70061016)	6244.26074 (70061016)
33500.0	6126.37549c(70072616)	6858.77148c(70072616)	5230.30078c(70072616)	5531.91113 (70061016)	5540.77246 (70061016)
33450.0	6622.48145 (70111916)	5561.17041c(70072616)	4174.77148 (70051316)	4592.23486 (70061016)	4798.14063c(70073016)
33400.0	8894.71387 (70111916)	3535.55762c(70072616)	3448.36328 (70070716)	3697.73584 (70071416)	4742.96436c(70073016)
33350.0	8372.91992 (70111916)	2073.90698 (70071316)	2322.53247 (70070716)	2569.17847 (70071416)	3929.79883c(70073016)
33300.0	7192.55371 (70042808)	1809.63733 (70111916)	826.52887 (70070716)	1204.16565 (70061716)	2205.98096c(70073016)
33250.0	6257.71973 (70102816)	3144.27832 (70111916)	38.44110 (70070716)	195.14842 (70071416)	820.07458 (70052216)
33200.0	3930.17896 (70061124)	0.00364c(70063016)	0.00340c(70073016)	4.01123 (70052216)	174.64961 (70050716)
33150.0	327.36539c(70051916)	0.00000 (0)	0.00000 (0)	0.05133 (70062016)	97.80118 (70070916)
33100.0	0.40992 (70051816)	0.00000 (70092916)	0.00000 (70070916)	0.87004c(70071616)	139.57770c(70050516)

*** MODELING OPTIONS USED: CONC RURAL FLAT DFAULT

*** THE 1ST HIGHEST 8-HR AVERAGE CONCENTRATION VALUES FOR SOURCE GROUP: ALL ***
INCLUDING SOURCE(S): 202 ,

*** NETWORK ID: CAR ; NETWORK TYPE: GRIDCART ***

** CONC OF OTHER IN (MICROGRAMS/CUBIC-METER) **

Y-COORD (METERS)	X-COORD (METERS) 65600.00	65650.00	65700.00	65750.00	65800.00
33700.0	5760.94336 (70061016)	4898.89941 (70061016)	4846.43799c(70081616)	5035.09033c(70081616)	4558.57568c(70081616)
33650.0	5900.39697 (70061016)	4655.43652 (70061016)	5420.14307c(70081616)	5231.79102c(70081616)	4461.17529c(70081616)
33600.0	5733.83203 (70061016)	5360.23975c(70081616)	5783.25000c(70081616)	5186.25928c(70081616)	4117.66260c(70081616)
33550.0	5118.38086 (70061016)	5887.09375c(70081616)	5817.58008c(70081616)	4803.38818c(70081616)	3994.80396 (70071916)
33500.0	5719.57129c(70073016)	5987.38525c(70081616)	5531.95313c(70073016)	4798.88818c(70073016)	4740.54395 (70071916)
33450.0	6218.22705c(70073016)	6348.06689c(70073016)	5590.83154c(70073016)	5252.84424 (70071916)	5396.81445 (70071916)
33400.0	6116.93701c(70073016)	5894.26416c(70073016)	5405.57080 (70071916)	5997.59229 (70071916)	5886.32178 (70071916)
33350.0	4804.92627c(70073016)	4803.93994 (70071916)	6108.14697 (70071916)	6402.64600 (70071916)	5964.06104 (70071916)
33300.0	2995.93457 (70071916)	4955.67773 (70071916)	6022.92627 (70071916)	5966.74023 (70071916)	5253.72803 (70071916)
33250.0	2255.97607 (70071916)	3872.30640 (70071916)	4596.06348 (70071916)	4461.91309 (70071916)	4515.13232 (70100216)
33200.0	984.20288 (70071916)	2146.30225c(70082616)	3306.09497c(70082616)	3796.59546 (70100216)	4516.72266 (70100216)
33150.0	1079.24390 (70070916)	2486.77173 (70070916)	3351.27319 (70070916)	3805.74756 (70091216)	4233.27783 (70091216)
33100.0	906.86823 (70090716)	2067.52905 (70070916)	3236.19971 (70062616)	3944.02686 (70062616)	4144.63965 (70062616)

*** MODELING OPTIONS USED: CONC RURAL FLAT DFAULT

*** THE 1ST HIGHEST 8-HR AVERAGE CONCENTRATION VALUES FOR SOURCE GROUP: ALL ***
INCLUDING SOURCE(S): 202 ,

*** NETWORK ID: CAR ; NETWORK TYPE: GRIDCART ***

** CONC OF OTHER IN (MICROGRAMS/CUBIC-METER) **

Y-COORD (METERS)	X-COORD (METERS) 65850.00	65900.00	65950.00	66000.00
33700.0	3970.83594 (70091216)	3777.14209 (70091216)	3242.87256 (70091216)	3310.39111c(70082616)
33650.0	3886.17334 (70091216)	3427.46436 (70091216)	3619.32593c(70082616)	3626.56592c(70082616)
33600.0	3541.71094c(70062116)	3951.20825c(70062116)	4008.05444c(70062116)	3900.09375c(70083116)
33550.0	4299.65869c(70062116)	4387.64746c(70062116)	4368.37109c(70083116)	4856.94873c(70083116)
33500.0	4671.59912c(70062116)	4787.08789c(70083116)	5206.26318c(70083116)	5013.59131c(70083116)
33450.0	5063.95898 (70071916)	5341.68799c(70083116)	4944.71924c(70083116)	4169.94580c(70083116)
33400.0	5317.72363 (70071916)	4529.66504 (70071916)	3730.95190 (70071916)	3429.08716c(70090424)
33350.0	5132.44678 (70071916)	4209.73535 (70071916)	3745.83936 (70100216)	3843.55908 (70100216)
33300.0	4358.62842 (70071916)	4557.42578 (70100216)	4703.18311 (70100216)	4685.54395 (70100216)
33250.0	5079.35938 (70100216)	5299.38037 (70100216)	5265.48291 (70100216)	5072.81982 (70100216)
33200.0	4875.72607 (70100216)	4940.20654 (70100216)	4790.42969 (70100216)	4523.09473 (70100216)
33150.0	4223.09766 (70091216)	3953.79297 (70091216)	3622.19580 (70100216)	3744.08545c(70122716)
33100.0	4215.73340c(70090116)	4094.86450c(70090116)	4344.70313c(70122716)	4571.12451c(70122716)

*** MODELING OPTIONS USED: CONC RURAL FLAT DFAULT

*** THE 2ND HIGHEST 8-HR AVERAGE CONCENTRATION VALUES FOR SOURCE GROUP: ALL ***
INCLUDING SOURCE(S): 202 ,

*** NETWORK ID: CAR ; NETWORK TYPE: GRIDCART ***

** CONC OF OTHER IN (MICROGRAMS/CUBIC-METER) **

Y-COORD (METERS)	X-COORD (METERS) 64600.00	64650.00	64700.00	64750.00	64800.00
33700.0	4331.75781 (70122816)	4384.08447 (70041624)	4617.37061 (70041624)	4135.16455c(70041516)	4508.59766c(70041516)
33650.0	4797.34082c(70111908)	4513.36914 (70122816)	4529.14795 (70122816)	4713.04736 (70123024)	4659.33789c(70041516)
33600.0	5972.66797c(70111908)	5483.79004 (70100708)	4685.68945c(70111908)	4849.19385 (70122816)	5073.46875 (70041624)
33550.0	5322.56738 (70100716)	6128.90088c(70111908)	6421.11963c(70111908)	5629.35107 (70042924)	5065.15723 (70122816)
33500.0	4507.56396c(70032816)	4787.74268 (70100716)	5783.19385 (70100716)	6722.23389c(70111908)	6858.49756c(70111908)
33450.0	4279.61670c(70032816)	4360.67334 (70100708)	4767.28467 (70033116)	5257.68311 (70033116)	6318.07080 (70100716)
33400.0	4071.41797 (70100624)	4404.30469 (70100624)	4481.06494 (70100624)	4292.20947 (70082916)	5160.95410 (70033116)
33350.0	3404.49731c(70051924)	3715.51563c(70010524)	4362.20361c(70010524)	4747.63721 (70082916)	4996.59375 (70082916)
33300.0	2922.65356 (70082916)	3332.40454 (70082916)	3702.89453c(70121416)	3521.43994c(70121416)	3706.36328c(70051916)
33250.0	3289.18237c(70011416)	3449.91919c(70011416)	3582.29810c(70011416)	3665.64868c(70011416)	3671.70410c(70011416)
33200.0	3502.68872c(70011416)	3744.78125c(70011416)	3980.96948c(70011416)	4194.40576c(70011416)	4358.82910c(70011416)
33150.0	3463.29565 (70031616)	3721.37061 (70031616)	3988.37280 (70031616)	4254.49463 (70031616)	4502.66895 (70031616)
33100.0	3186.50317c(70051824)	3279.80469c(70121416)	3364.22095c(70121416)	3405.79419c(70121416)	3555.52124c(70042116)

*** MODELING OPTIONS USED: CONC RURAL FLAT DFAULT

*** THE 2ND HIGHEST 8-HR AVERAGE CONCENTRATION VALUES FOR SOURCE GROUP: ALL ***
INCLUDING SOURCE(S): 202 ,

*** NETWORK ID: CAR ; NETWORK TYPE: GRIDCART ***

** CONC OF OTHER IN (MICROGRAMS/CUBIC-METER) **

Y-COORD (METERS)	X-COORD (METERS) 64850.00	64900.00	64950.00	65000.00	65050.00
33700.0	4644.06152c(70041516)	4447.90039c(70041516)	5052.95068 (70121516)	5977.47852 (70102816)	5809.02051 (70042308)
33650.0	5067.55371 (70123024)	4826.00977 (70042824)	5015.88379c(70041516)	5204.92236 (70121516)	6653.89307 (70102816)
33600.0	5253.81592c(70041516)	5547.89355 (70123024)	4963.85840c(70092016)	5559.37061 (70121516)	5816.83984 (70102816)
33550.0	5423.90430 (70052916)	5903.34326 (70123024)	6078.86279 (70123024)	5409.58594c(70092016)	5955.74854 (70121516)
33500.0	5717.12451c(70111908)	5932.44629 (70052916)	5946.23096 (70052916)	6665.33984 (70123024)	5784.42236 (70100616)
33450.0	7411.83154c(70111908)	7120.94727 (70100708)	6224.31396 (70052916)	6834.12695 (70052916)	7213.96338 (70123024)
33400.0	5800.46680 (70033116)	6954.49316 (70100716)	8216.11914c(70111908)	7101.56006 (70042924)	7583.54541 (70042924)
33350.0	5063.74219c(70010524)	5264.42578 (70033116)	6045.24854 (70033116)	7744.59473 (70100716)	9137.88574c(70111908)
33300.0	4354.50244c(70051916)	5137.55322c(70010524)	5729.60498c(70010524)	5601.07715c(70051916)	6185.56592c(70031116)
33250.0	4143.76904 (70082916)	4168.70459c(70121416)	4386.98584c(70051916)	5189.96338c(70051916)	5619.91748 (70100624)
33200.0	4435.25439c(70011416)	4369.55664c(70011416)	4094.63550c(70011416)	3894.23218 (70052116)	3874.20728c(70063016)
33150.0	4704.66846 (70031616)	4815.95508 (70031616)	4578.41553c(70121416)	3873.37329c(70121416)	3903.36938 (70031616)
33100.0	3755.90576c(70042116)	3890.15454c(70042116)	3905.89111c(70042116)	3818.03467c(70051916)	4310.02393c(70071216)

*** MODELING OPTIONS USED: CONC RURAL FLAT DFAULT

*** THE 2ND HIGHEST 8-HR AVERAGE CONCENTRATION VALUES FOR SOURCE GROUP: ALL ***
INCLUDING SOURCE(S): 202 ,

*** NETWORK ID: CAR ; NETWORK TYPE: GRIDCART ***

** CONC OF OTHER IN (MICROGRAMS/CUBIC-METER) **

Y-COORD (METERS)	X-COORD (METERS) 65100.00	65150.00	65200.00	65250.00	65300.00
33700.0	6094.83594 (70111724)	6410.00537 (70042308)	5493.19824 (70042808)	5644.84473c(70092416)	5088.46729c(70092416)
33650.0	6125.29492 (70102816)	6702.49023 (70091716)	5961.35303 (70042808)	5502.06543 (70042808)	5642.68213c(70092416)
33600.0	6512.97510c(70100524)	6490.23047 (70111724)	7090.85400 (70042308)	5939.91357 (70111916)	6025.17969c(70092416)
33550.0	6717.83057 (70102816)	6949.46191 (70042308)	7119.28613 (70111724)	6622.98779 (70042724)	6009.91309c(70092416)
33500.0	6407.11963 (70121516)	7821.48779 (70102816)	7357.20801 (70091616)	7333.62012 (70042808)	6771.93896 (70042808)
33450.0	6336.34668 (70100616)	6656.46826 (70091616)	8401.21777 (70011108)	8064.11133 (70111724)	7522.02490 (70042724)
33400.0	7625.76465 (70123024)	7003.34570 (70100616)	7465.96143 (70121516)	8984.57520 (70042308)	8938.94727 (70042808)
33350.0	7792.52100 (70052916)	7644.43457c(70041516)	7082.37891 (70102808)	8989.00879 (70102816)	8838.03809 (70111724)
33300.0	8806.16895 (70100716)	10309.06740c(70111908)	8983.07715 (70052916)	7343.97998 (70102808)	9008.91016 (70011108)
33250.0	6594.39160c(70010524)	7157.84863 (70100624)	10460.47170 (70100716)	7432.41113 (70100716)	5783.79883 (70102808)
33200.0	4169.52881c(70051916)	4235.02686 (70052116)	4950.45020c(70010524)	5138.36963c(70010524)	6247.16748 (70101916)
33150.0	3499.77417 (70052116)	3211.17188 (70052116)	2431.34326 (70070616)	1187.86304 (70070616)	267.57111 (70082916)
33100.0	3521.94653c(70051916)	2861.83813c(70051916)	1845.11230 (70070616)	815.41803 (70070616)	84.06619 (70070616)

*** MODELING OPTIONS USED: CONC RURAL FLAT DFAULT

*** THE 2ND HIGHEST 8-HR AVERAGE CONCENTRATION VALUES FOR SOURCE GROUP: ALL ***
INCLUDING SOURCE(S): 202 ,

*** NETWORK ID: CAR ; NETWORK TYPE: GRIDCART ***

** CONC OF OTHER IN (MICROGRAMS/CUBIC-METER) **

Y-COORD (METERS)	X-COORD (METERS) 65350.00	65400.00	65450.00	65500.00	65550.00
33700.0	4399.25391 (70051516)	4347.20801 (70051516)	5137.01318c(70013116)	5080.09033c(70013116)	5181.48535 (70091916)
33650.0	4706.75391 (70051516)	4801.08496 (70051516)	5255.46826 (70073116)	4893.72070 (70073116)	5419.15137 (70091916)
33600.0	4946.59229 (70051516)	5187.50439 (70051516)	5462.71484 (70073116)	4991.63965 (70073116)	5400.96338 (70091916)
33550.0	5039.80762 (70051516)	5401.85596 (70051516)	5383.34766 (70073116)	4802.60449 (70073116)	5083.54492 (70061116)
33500.0	4886.69531 (70051516)	5319.55518 (70051516)	4936.45166 (70073116)	4533.26807 (70070716)	4898.38281 (70061116)
33450.0	5031.54688 (70061216)	4706.76172 (70051516)	4065.08813c(70072616)	4278.74316 (70071416)	4240.83496 (70061016)
33400.0	6603.58203 (70042808)	3416.07056 (70051516)	3142.99707 (70051316)	3383.14551 (70070716)	3563.55225 (70071416)
33350.0	7806.70508 (70042808)	1853.85388 (70070716)	1920.60291c(70050516)	2288.72095 (70061716)	2855.86646c(70081616)
33300.0	6859.61914 (70050924)	1765.85168 (70061216)	611.26849c(70050516)	1184.71252 (70071416)	1855.72656 (70052216)
33250.0	5268.46924 (70060124)	2162.81372 (70112616)	36.81353 (70061716)	188.78009 (70052216)	705.12903 (70071916)
33200.0	3876.41919c(70120824)	0.00267c(70083116)	0.00330 (70061716)	2.41064 (70071916)	155.54776 (70071916)
33150.0	271.38141 (70100624)	0.00000 (0)	0.00000 (0)	0.05133 (70080116)	76.43392 (70062016)
33100.0	0.28759c(70042116)	0.00000c(70071816)	0.00000 (70081416)	0.41288 (70052516)	128.47189 (70090716)

*** MODELING OPTIONS USED: CONC RURAL FLAT DFAULT

*** THE 2ND HIGHEST 8-HR AVERAGE CONCENTRATION VALUES FOR SOURCE GROUP: ALL ***
INCLUDING SOURCE(S): 202 ,

*** NETWORK ID: CAR ; NETWORK TYPE: GRIDCART ***

** CONC OF OTHER IN (MICROGRAMS/CUBIC-METER) **

Y-COORD (METERS)	X-COORD (METERS) 65600.00	65650.00	65700.00	65750.00	65800.00
33700.0	5313.94434 (70091916)	4195.96387c(70090316)	4506.62598 (70042416)	4229.87988 (70042416)	3754.45117 (70060916)
33650.0	5108.64258 (70091916)	4601.88379c(70081616)	4308.82373 (70042416)	3955.08691 (70060916)	3884.82520 (70091216)
33600.0	4641.62793 (70091916)	4647.93945c(70073016)	4331.64990c(70073016)	3893.06104 (70060916)	3846.65137 (70091216)
33550.0	5105.44678c(70073016)	5305.48828c(70073016)	5004.09912c(70073016)	4451.55176c(70073016)	3949.58154c(70073016)
33500.0	5087.02783c(70081616)	5979.91846c(70073016)	5363.90918c(70081616)	4375.69629 (70071916)	4521.09961c(70062116)
33450.0	5273.08838c(70081616)	5484.49756c(70081616)	4452.21484 (70071916)	4579.75439c(70073016)	4818.82129c(70082616)
33400.0	4775.43896c(70081616)	4245.09961c(70081616)	4761.36182c(70073016)	4671.25537c(70082616)	4941.94141c(70083116)
33350.0	3390.30371c(70081616)	4168.04443c(70073016)	4041.66919c(70082616)	4765.76172c(70082616)	4876.13379c(70082616)
33300.0	2415.26538c(70073016)	2666.79834c(70082616)	3994.75586c(70082616)	4633.89551c(70082616)	4605.03564c(70082616)
33250.0	1425.92090 (70071116)	2369.57959c(70082616)	3690.05859c(70082616)	4298.05029c(70082616)	4214.42041c(70082616)
33200.0	818.04834c(70072716)	2016.80444 (70071916)	2710.30518 (70070916)	3792.04932c(70082616)	3780.11206 (70091216)
33150.0	754.94116c(70082016)	1661.91211c(70082016)	2786.32764 (70091216)	3571.57031 (70070916)	3751.20068c(70090116)
33100.0	901.90668c(70050516)	1945.11584 (70062616)	2822.97388 (70070916)	3523.89771 (70091216)	4055.55811c(70090116)

*** MODELING OPTIONS USED: CONC RURAL FLAT DFAULT

*** THE 2ND HIGHEST 8-HR AVERAGE CONCENTRATION VALUES FOR SOURCE GROUP: ALL ***
INCLUDING SOURCE(S): 202 ,

*** NETWORK ID: CAR ; NETWORK TYPE: GRIDCART ***

** CONC OF OTHER IN (MICROGRAMS/CUBIC-METER) **

Y-COORD (METERS)	X-COORD (METERS) 65850.00	65900.00	65950.00	66000.00
33700.0	3784.82520c(70081616)	2933.51050c(70081616)	3030.41968c(70082616)	3198.14209c(70062116)
33650.0	3480.28613c(70081616)	3257.16064c(70062116)	3569.08911c(70062116)	3610.28760c(70062116)
33600.0	3538.11963 (70091216)	3926.66455c(70082616)	3976.82080c(70082616)	3767.85474c(70062116)
33550.0	4194.93701c(70082616)	4329.94043c(70082616)	4087.89087c(70062116)	3723.64844c(70122616)
33500.0	4644.38721c(70082616)	4410.51465c(70082616)	3941.50732c(70082616)	4026.69727c(70122616)
33450.0	5041.73633c(70083116)	4476.64893 (70071916)	3826.13184 (70071916)	3665.36060c(70090424)
33400.0	5099.31982c(70083116)	4528.79980c(70083116)	3657.38745c(70083116)	3085.29858 (70071516)
33350.0	4532.53320c(70082616)	3946.42041c(70082616)	3611.92334 (70071516)	3586.81055 (70071516)
33300.0	4189.52734c(70082616)	3971.72998 (70071516)	3879.00879 (70071516)	4011.77856c(70082116)
33250.0	3933.61621 (70071516)	3856.37646 (70071516)	3612.13086 (70071516)	3657.60303 (70110716)
33200.0	3802.59863 (70091216)	3591.04272 (70091216)	3661.08276 (70110716)	3641.28809 (70110716)
33150.0	3894.71045c(70090116)	3783.91455c(70090116)	3554.32935 (70091216)	3436.91699 (70100216)
33100.0	4058.57544 (70062616)	3905.48438c(70122716)	3802.06616c(70090116)	3618.55249 (70061816)

*** MODELING OPTIONS USED: CONC RURAL FLAT DFAULT

*** THE MAXIMUM 50 1-HR AVERAGE CONCENTRATION VALUES FOR SOURCE GROUP: ALL ***
INCLUDING SOURCE(S): 202 ,

** CONC OF OTHER IN (MICROGRAMS/CUBIC-METER) **

RANK	CONC	(YYMMDDHH)	AT	RECEPTOR (XR,YR)	OF TYPE	RANK	CONC	(YYMMDDHH)	AT	RECEPTOR (XR,YR)	OF TYPE
1.	28511.51560	(70121605)	AT (	65350.00, 33400.00)	GC	26.	21141.14450	(70080224)	AT (	65300.00, 33400.00)	GC
2.	26542.01370	(70080122)	AT (	65200.00, 33250.00)	GC	27.	21141.14450	(70082922)	AT (	65300.00, 33400.00)	GC
3.	26117.47270	(70121605)	AT (	65350.00, 33450.00)	GC	28.	21136.54490	(70101302)	AT (	65150.00, 33250.00)	GC
4.	24531.53710	(70051420)	AT (	65200.00, 33300.00)	GC	29.	21126.96880	(70092120)	AT (	65250.00, 33350.00)	GC
5.	24150.45900	(70091801)	AT (	65300.00, 33350.00)	GC	30.	21067.54690	(70092120)	AT (	65300.00, 33300.00)	GC
6.	23730.00200	(70100914)	AT (	66000.00, 33450.00)	GC	31.	20851.80660	(70091523)	AT (	65200.00, 33250.00)	GC
7.	23586.81050	(70091805)	AT (	65200.00, 33250.00)	GC	32.	20849.36130	(70080122)	AT (	65100.00, 33300.00)	GC
8.	23550.05860	(70082923)	AT (	65250.00, 33300.00)	GC	33.	20760.89650	(70092301)	AT (	65300.00, 33300.00)	GC
9.	23453.53130	(70092019)	AT (	65200.00, 33350.00)	GC	34.	20653.23830	(70100914)	AT (	65950.00, 33400.00)	GC
10.	22844.22660	(70061220)	AT (	65250.00, 33350.00)	GC	35.	20507.73440	(70071303)	AT (	65300.00, 33450.00)	GC
11.	22838.01950	(70061603)	AT (	65300.00, 33350.00)	GC	36.	20506.41210	(70082924)	AT (	65250.00, 33400.00)	GC
12.	22717.81840	(70091320)	AT (	65350.00, 33400.00)	GC	37.	20438.32230	(70011621)	AT (	65200.00, 33250.00)	GC
13.	22473.99020	(70092302)	AT (	65300.00, 33400.00)	GC	38.	20438.32230	(70041120)	AT (	65200.00, 33250.00)	GC
14.	22391.17970	(70121605)	AT (	65300.00, 33600.00)	GC	39.	20425.49020	(70121605)	AT (	65300.00, 33650.00)	GC
15.	22183.83200	(70070722)	AT (	65300.00, 33350.00)	GC	40.	20385.02340	(70100914)	AT (	65950.00, 33450.00)	GC
16.	22175.49410	(70092224)	AT (	65300.00, 33350.00)	GC	41.	20311.66600	(70080904)	AT (	65350.00, 33350.00)	GC
17.	21748.65230	(70061204)	AT (	65200.00, 33300.00)	GC	42.	20271.05470	(70092219)	AT (	65250.00, 33300.00)	GC
18.	21616.86130	(70061624)	AT (	65250.00, 33350.00)	GC	43.	20196.52930	(70020518)	AT (	65200.00, 33250.00)	GC
19.	21468.41800	(70092019)	AT (	65250.00, 33300.00)	GC	44.	20185.59180	(70030711)	AT (	64600.00, 33250.00)	GC
20.	21393.77730	(70082923)	AT (	65200.00, 33350.00)	GC	45.	20167.06640	(70092415)	AT (	65350.00, 33400.00)	GC
21.	21247.33200	(70092022)	AT (	65150.00, 33350.00)	GC	46.	20133.21480	(70122815)	AT (	65200.00, 33250.00)	GC
22.	21238.78710	(70121605)	AT (	65300.00, 33550.00)	GC	47.	20116.83200	(70042923)	AT (	65150.00, 33350.00)	GC
23.	21218.16410	(70061222)	AT (	65200.00, 33300.00)	GC	48.	20116.00000	(70090221)	AT (	65300.00, 33400.00)	GC
24.	21204.36520	(70092019)	AT (	65150.00, 33400.00)	GC	49.	20101.54100	(70051322)	AT (	65250.00, 33300.00)	GC
25.	21191.01370	(70092022)	AT (	65200.00, 33300.00)	GC	50.	20099.20510	(70060303)	AT (	65200.00, 33350.00)	GC

*** RECEPTOR TYPES: GC = GRIDCART
GP = GRIDPOLR
DC = DISCCART
DP = DISCPOLR
BD = BOUNDARY

*** MODELING OPTIONS USED: CONC RURAL FLAT DFAULT

*** THE MAXIMUM 50 8-HR AVERAGE CONCENTRATION VALUES FOR SOURCE GROUP: ALL ***
INCLUDING SOURCE(S): 202 ,

** CONC OF OTHER IN (MICROGRAMS/CUBIC-METER) **

RANK	CONC	(YYMMDDHH)	AT	RECEPTOR (XR,YR)		OF TYPE	RANK	CONC	(YYMMDDHH)	AT	RECEPTOR (XR,YR)		OF TYPE
1.	14342.40140	(70100708)	AT (	65200.00,	33250.00)	GC	26.	8989.00879	(70102816)	AT (	65250.00,	33350.00)	GC
2.	12901.76170	(70042308)	AT (	65300.00,	33350.00)	GC	27.	8984.57520	(70042308)	AT (	65250.00,	33400.00)	GC
3.	12090.61520	(70100708)	AT (	65100.00,	33300.00)	GC	28.	8983.07715	(70052916)	AT (	65200.00,	33300.00)	GC
4.	11770.13280	(70042308)	AT (	65250.00,	33450.00)	GC	29.	8938.94727	(70042808)	AT (	65300.00,	33400.00)	GC
5.	10660.50980	(70100708)	AT (	65150.00,	33300.00)	GC	30.	8894.71387	(70111916)	AT (	65350.00,	33400.00)	GC
6.	10653.42680	(70100708)	AT (	65000.00,	33350.00)	GC	31.	8838.03809	(70111724)	AT (	65300.00,	33350.00)	GC
7.	10460.47170	(70100716)	AT (	65200.00,	33250.00)	GC	32.	8806.16895	(70100716)	AT (	65100.00,	33300.00)	GC
8.	10309.06740c	(70111908)	AT (	65150.00,	33300.00)	GC	33.	8765.19336	(70100708)	AT (	64850.00,	33450.00)	GC
9.	10107.01270c	(70111908)	AT (	65200.00,	33250.00)	GC	34.	8735.62109	(70042308)	AT (	65150.00,	33650.00)	GC
10.	10077.29300	(70100708)	AT (	65050.00,	33350.00)	GC	35.	8719.72949	(70042308)	AT (	65100.00,	33700.00)	GC
11.	10039.99320	(70042308)	AT (	65200.00,	33550.00)	GC	36.	8714.35352	(70100708)	AT (	64800.00,	33450.00)	GC
12.	10036.62110	(70101916)	AT (	65200.00,	33250.00)	GC	37.	8636.19824	(70100716)	AT (	65050.00,	33350.00)	GC
13.	9997.07520	(70011108)	AT (	65250.00,	33350.00)	GC	38.	8609.75195	(70100708)	AT (	65050.00,	33300.00)	GC
14.	9996.84961	(70102816)	AT (	65250.00,	33400.00)	GC	39.	8602.18555	(70011708)	AT (	65150.00,	33300.00)	GC
15.	9831.22168	(70042308)	AT (	65200.00,	33500.00)	GC	40.	8554.44043c	(70111908)	AT (	65100.00,	33300.00)	GC
16.	9764.53320	(70100716)	AT (	65150.00,	33300.00)	GC	41.	8465.33203	(70100708)	AT (	65150.00,	33250.00)	GC
17.	9599.49707	(70042924)	AT (	65200.00,	33300.00)	GC	42.	8404.31836c	(70041516)	AT (	65100.00,	33400.00)	GC
[illegible]	9580.71094	(70100708)	AT (	64900.00,	33400.00)	GC	43.	8401.21777	(70011108)	AT (	65200.00,	33450.00)	GC
[illegible]	9461.21777	(70042308)	AT (	65150.00,	33600.00)	GC	44.	8382.46680	(70042924)	AT (	65150.00,	33300.00)	GC
20.	9439.94043	(70100708)	AT (	64950.00,	33400.00)	GC	45.	8372.91992	(70111916)	AT (	65350.00,	33350.00)	GC
21.	9220.96387	(70042308)	AT (	65300.00,	33400.00)	GC	46.	8371.70703	(70100708)	AT (	64950.00,	33350.00)	GC
22.	9170.69531	(70102816)	AT (	65300.00,	33300.00)	GC	47.	8317.13477	(70011108)	AT (	65150.00,	33500.00)	GC
23.	9137.88574c	(70111908)	AT (	65050.00,	33350.00)	GC	48.	8289.12500c	(70100524)	AT (	65200.00,	33450.00)	GC
24.	9042.75488	(70102816)	AT (	65200.00,	33450.00)	GC	49.	8223.26367c	(70041516)	AT (	65050.00,	33450.00)	GC
25.	9008.91016	(70011108)	AT (	65300.00,	33300.00)	GC	50.	8221.18457	(70053008)	AT (	65200.00,	33300.00)	GC

*** RECEPTOR TYPES: GC = GRIDCART
GP = GRIDPOLR
DC = DISCCART
DP = DISCPOLR
BD = BOUNDARY

*** MODELING OPTIONS USED: CONC RURAL FLAT DFAULT

*** THE SUMMARY OF HIGHEST 1-HR RESULTS ***

** CONC OF OTHER IN (MICROGRAMS/CUBIC-METER) **

GROUP ID			AVERAGE CONC	DATE (YYMMDDHH)	RECEPTOR (XR, YR, ZELEV, ZFLAG)				OF TYPE	NETWORK GRID-ID
ALL	HIGH	1ST HIGH VALUE IS	28511.51560	ON 70121605: AT (	65350.00,	33400.00,	0.00,	0.00)	GC	CAR
	HIGH	2ND HIGH VALUE IS	23586.81050	ON 70091805: AT (	65200.00,	33250.00,	0.00,	0.00)	GC	CAR

*** RECEPTOR TYPES: GC = GRIDCART
GP = GRIDPOLR
DC = DISCCART
DP = DISCPOLR
BD = BOUNDARY

*** MODELING OPTIONS USED: CONC RURAL FLAT DFAULT

*** THE SUMMARY OF HIGHEST 8-HR RESULTS ***

** CONC OF OTHER IN (MICROGRAMS/CUBIC-METER) **

GROUP ID			AVERAGE CONC	DATE (YYMMDDHH)	RECEPTOR (XR, YR, ZELEV, ZFLAG)				OF TYPE	NETWORK GRID-ID
ALL	HIGH	1ST HIGH VALUE IS	14342.40140	ON 70100708: AT (	65200.00,	33250.00,	0.00,	0.00)	GC	CAR
	HIGH	2ND HIGH VALUE IS	10460.47170	ON 70100716: AT (	65200.00,	33250.00,	0.00,	0.00)	GC	CAR

*** RECEPTOR TYPES: GC = GRIDCART
GP = GRIDPOLR
DC = DISCCART
DP = DISCPOLR
BD = BOUNDARY

*** MODELING OPTIONS USED: CONC RURAL FLAT DFAULT

*** Message Summary For ISC2 Model Execution ***

--------- Summary of Total Messages --------

A Total of 0 Fatal Error Message(s)
A Total of 0 Warning Message(s)
A Total of 2063 Informational Message(s)

A Total of 2063 Calm Hours Identified

******** FATAL ERROR MESSAGES ********
*** NONE ***

******** WARNING MESSAGES ********
*** NONE ***

****
*** ISCST2 Finishes Successfully ***
****

NMAX70F1B.DTA

```
NO ECHO

CO STARTING
CO TITLEONE New Bldgs. 5A,5B - FINE GRID 50m - 1970 - Case 1a
CO MODELOPT DFAULT CONC   RURAL
CO AVERTIME  1  8
CO POLLUTID OTHER
CO DCAYCOEF    .000000
CO RUNORNOT RUN
CO ERRORFIL nmx70f1B.ERR
CO FINISHED


SO STARTING

** Source Location Cards:
**          SRCID SRCTYP        XS            YS            ZS

SO LOCATION   202 POINT     65425.0000    33139.0000        .0000

** Source Parameter Cards:
** POINT:   SRCID       QS            HS         TS          VS         DS
** VOLUME:  SRCID       QS            HS       SYINIT      SZINIT
** AREA:    SRCID       QS            HS        XINIT

SO SRCPARAM   202    803.12400       54.8640   310.9300    18.2880      .7620

SO BUILDHGT 202          .00       .00       .00       .00       .00       .00
SO BUILDHGT 202          .00       .00       .00       .00       .00       .00
SO BUILDHGT 202          .00       .00       .00     24.87       .00       .00
SO BUILDHGT 202          .00       .00       .00       .00       .00       .00
SO BUILDHGT 202          .00       .00       .00       .00     24.87     24.87
SO BUILDHGT 202        24.87     24.87     24.87     24.87       .00       .00
SO BUILDWID 202          .00       .00       .00       .00       .00       .00
SO BUILDWID 202          .00       .00       .00       .00       .00       .00
SO BUILDWID 202          .00       .00       .00     34.48       .00       .00
SO BUILDWID 202          .00       .00       .00       .00       .00       .00
SO BUILDWID 202          .00       .00       .00       .00     50.15     49.80
SO BUILDWID 202        47.93     44.60     39.92     34.48       .00       .00
SO EMISUNIT    .100000E+07 (GRAMS/SEC)          (MICROGRAMS/CUBIC-METER)
SO SRCGROUP ALL
SO FINISHED


RE STARTING
RE GRIDCART CAR STA
RE GRIDCART CAR XYINC   64600.0   29      50.0   33100.0   13      50.0
RE GRIDCART CAR END
RE FINISHED


ME STARTING
ME INPUTFIL CLMBS70.BIN                              UNFORM
ME ANEMHGHT   10.000 METERS
ME SURFDATA  13825  1970            SURFNAME
ME UAIRDATA  13895  1970            UAIRNAME
ME WINDCATS    1.54    3.09    5.14    8.23   10.80
ME FINISHED
```

```
OU STARTING
OU RECTABLE ALLAVE FIRST  SECOND
OU MAXTABLE ALLAVE  50
OU PLOTFILE   1     ALL  FIRST  nmx70f1B.GRF              30
OU PLOTFILE   1     ALL  SECOND nmx70f1B.GRF              30
OU PLOTFILE   8     ALL  FIRST  nmx70f1B.GRF              30
OU PLOTFILE   8     ALL  SECOND nmx70f1B.GRF              30
OU FINISHED
```

NMAX70F1B.LST

```
NO ECHO

Line Max-32 Version 1.1

 Input File - NMX70F1B.DTA
Output File - NMX70F1B.LST
   Met File - CLMBS70.BIN

************************************
*** SETUP Finishes Successfully ***
************************************
```

*** MODELING OPTIONS USED: CONC   RURAL FLAT   DFAULT

*** MODEL SETUP OPTIONS SUMMARY ***

- -

**Model Is Setup For Calculation of Average CONCentration Values.

**Model Uses RURAL Dispersion.

**Model Uses Regulatory DEFAULT Options:
1. Final Plume Rise.
2. Stack-tip Downwash.
3. Buoyancy-induced Dispersion.
4. Use Calms Processing Routine.
5. Not Use Missing Data Processing Routine.
6. Default Wind Profile Exponents.
7. Default Vertical Potential Temperature Gradients.
8. "Upper Bound" Values for Supersquat Buildings.
9. No Exponential Decay for RURAL Mode

**Model Assumes Receptors on FLAT Terrain.

**Model Assumes No FLAGPOLE Receptor Heights.

**Model Calculates 2 Short Term Average(s) of: 1-HR   8-HR

**This Run Includes: 1 Source(s);   1 Source Group(s); and   377 Receptor(s)

**The Model Assumes A Pollutant Type of: OTHER

**Model Set To Continue RUNning After the Setup Testing.

**Output Options Selected:
Model Outputs Tables of Highest Short Term Values by Receptor (RECTABLE Keyword)
Model Outputs Tables of Overall Maximum Short Term Values (MAXTABLE Keyword)
Model Outputs External File(s) of High Values for Plotting (PLOTFILE Keyword)

**NOTE: The Following Flags May Appear Following CONC Values: c for Calm Hours
m for Missing Hours
b for Both Calm and Missing Hours

**Misc. Inputs: Anem. Hgt. (m) =   10.00 ;   Decay Coef. =   0.0000   ;   Rot. Angle =   0.0
Emission Units = (GRAMS/SEC)   ; Emission Rate Unit Factor =   0.10000E+07
Output Units   = (MICROGRAMS/CUBIC-METER)

**Input Runstream File: NMX70F1B.DTA   ; **Output Print File: NMX70F1B.LST
**Detailed Error/Message File: nmx70f1b.ERR

*** MODELING OPTIONS USED: CONC RURAL FLAT DFAULT

*** POINT SOURCE DATA ***

SOURCE ID	NUMBER PART. CATS.	EMISSION RATE (USER UNITS)	X (METERS)	Y (METERS)	BASE ELEV. (METERS)	STACK HEIGHT (METERS)	STACK TEMP. (DEG.K)	STACK EXIT VEL. (M/SEC)	STACK DIAMETER (METERS)	BUILDING EXISTS	EMISSION RATE SCALAR VARY BY
202	0	0.80312E+03	65425.0	33139.0	0.0	54.86	310.93	18.29	0.76	YES	

*** MODELING OPTIONS USED: CONC RURAL FLAT DFAULT

*** SOURCE IDs DEFINING SOURCE GROUPS ***

GROUP ID	SOURCE IDs
ALL	202 ,

*** MODELING OPTIONS USED: CONC RURAL FLAT DFAULT

*** DIRECTION SPECIFIC BUILDING DIMENSIONS ***

SOURCE ID: 202

IFV	BH	BW	WAK	IFV	BH	BW	WAK	IFV	BH	BW	WAK	IFV	BH	BW	WAK	IFV	BH	BW	WAK	IFV	BH	BW	WAK
1	0.0,	0.0,	0	2	0.0,	0.0,	0	3	0.0,	0.0,	0	4	0.0,	0.0,	0	5	0.0,	0.0,	0	6	0.0,	0.0,	0
7	0.0,	0.0,	0	8	0.0,	0.0,	0	9	0.0,	0.0,	0	10	0.0,	0.0,	0	11	0.0,	0.0,	0	12	0.0,	0.0,	0
13	0.0,	0.0,	0	14	0.0,	0.0,	0	15	0.0,	0.0,	0	16	24.9,	34.5,	0	17	0.0,	0.0,	0	18	0.0,	0.0,	0
19	0.0,	0.0,	0	20	0.0,	0.0,	0	21	0.0,	0.0,	0	22	0.0,	0.0,	0	23	0.0,	0.0,	0	24	0.0,	0.0,	0
25	0.0,	0.0,	0	26	0.0,	0.0,	0	27	0.0,	0.0,	0	28	0.0,	0.0,	0	29	24.9,	50.1,	0	30	24.9,	49.8,	0
31	24.9,	47.9,	0	32	24.9,	44.6,	0	33	24.9,	39.9,	0	34	24.9,	34.5,	0	35	0.0,	0.0,	0	36	0.0,	0.0,	0

*** MODELING OPTIONS USED: CONC RURAL FLAT DFAULT

*** GRIDDED RECEPTOR NETWORK SUMMARY ***

*** NETWORK ID: CAR ; NETWORK TYPE: GRIDCART ***

*** X-COORDINATES OF GRID ***
(METERS)

64600.0,	64650.0,	64700.0,	64750.0,	64800.0,	64850.0,	64900.0,	64950.0,	65000.0,	65050.0,
65100.0,	65150.0,	65200.0,	65250.0,	65300.0,	65350.0,	65400.0,	65450.0,	65500.0,	65550.0,
65600.0,	65650.0,	65700.0,	65750.0,	65800.0,	65850.0,	65900.0,	65950.0,	66000.0,	

*** Y-COORDINATES OF GRID ***
(METERS)

33100.0,	33150.0,	33200.0,	33250.0,	33300.0,	33350.0,	33400.0,	33450.0,	33500.0,	33550.0,
33600.0,	33650.0,	33700.0,							

*** MODELING OPTIONS USED: CONC RURAL FLAT DFAULT

* SOURCE-RECEPTOR COMBINATIONS LESS THAN 1.0 METER OR 3*ZLB *
IN DISTANCE. CALCULATIONS MAY NOT BE PERFORMED.

SOURCE ID	- - RECEPTOR LOCATION - - XR (METERS)	YR (METERS)	DISTANCE (METERS)
202	65400.0	33150.0	27.31
202	65400.0	33200.0	65.92

*** MODELING OPTIONS USED: CONC RURAL FLAT DFAULT

*** METEOROLOGICAL DAYS SELECTED FOR PROCESSING ***
(1=YES; 0=NO)

```
1 1 1 1 1 1 1 1 1 1   1 1 1 1 1 1 1 1 1 1   1 1 1 1 1 1 1 1 1 1   1 1 1 1 1 1 1 1 1 1   1 1 1 1 1 1 1 1 1 1
1 1 1 1 1 1 1 1 1 1   1 1 1 1 1 1 1 1 1 1   1 1 1 1 1 1 1 1 1 1   1 1 1 1 1 1 1 1 1 1   1 1 1 1 1 1 1 1 1 1
1 1 1 1 1 1 1 1 1 1   1 1 1 1 1 1 1 1 1 1   1 1 1 1 1 1 1 1 1 1   1 1 1 1 1 1 1 1 1 1   1 1 1 1 1 1 1 1 1 1
1 1 1 1 1 1 1 1 1 1   1 1 1 1 1 1 1 1 1 1   1 1 1 1 1 1 1 1 1 1   1 1 1 1 1 1 1 1 1 1   1 1 1 1 1 1 1 1 1 1
1 1 1 1 1 1 1 1 1 1   1 1 1 1 1 1 1 1 1 1   1 1 1 1 1 1 1 1 1 1   1 1 1 1 1 1 1 1 1 1   1 1 1 1 1 1 1 1 1 1
1 1 1 1 1 1 1 1 1 1   1 1 1 1 1 1 1 1 1 1   1 1 1 1 1 1 1 1 1 1   1 1 1 1 1 1 1 1 1 1   1 1 1 1 1 1 1 1 1 1
1 1 1 1 1 1 1 1 1 1   1 1 1 1 1 1 1 1 1 1   1 1 1 1 1 1 1 1 1 1   1 1 1 1 1 1 1 1 1 1   1 1 1 1 1 1 1 1 1 1
1 1 1 1 1 1 1 1 1 1   1 1 1 1 1 1
```

NOTE: METEOROLOGICAL DATA ACTUALLY PROCESSED WILL ALSO DEPEND ON WHAT IS INCLUDED IN THE DATA FILE.

*** UPPER BOUND OF FIRST THROUGH FIFTH WIND SPEED CATEGORIES ***
(METERS/SEC)

1.54, 3.09, 5.14, 8.23, 10.80,

*** WIND PROFILE EXPONENTS ***

STABILITY CATEGORY	WIND SPEED CATEGORY 1	2	3	4	5	6
A	.70000E-01	.70000E-01	.70000E-01	.70000E-01	.70000E-01	.70000E-01
B	.70000E-01	.70000E-01	.70000E-01	.70000E-01	.70000E-01	.70000E-01
C	.10000E+00	.10000E+00	.10000E+00	.10000E+00	.10000E+00	.10000E+00
D	.15000E+00	.15000E+00	.15000E+00	.15000E+00	.15000E+00	.15000E+00
E	.35000E+00	.35000E+00	.35000E+00	.35000E+00	.35000E+00	.35000E+00
F	.55000E+00	.55000E+00	.55000E+00	.55000E+00	.55000E+00	.55000E+00

*** VERTICAL POTENTIAL TEMPERATURE GRADIENTS ***
(DEGREES KELVIN PER METER)

STABILITY CATEGORY	WIND SPEED CATEGORY 1	2	3	4	5	6
A	.00000E+00	.00000E+00	.00000E+00	.00000E+00	.00000E+00	.00000E+00
B	.00000E+00	.00000E+00	.00000E+00	.00000E+00	.00000E+00	.00000E+00
C	.00000E+00	.00000E+00	.00000E+00	.00000E+00	.00000E+00	.00000E+00
D	.00000E+00	.00000E+00	.00000E+00	.00000E+00	.00000E+00	.00000E+00
E	.20000E-01	.20000E-01	.20000E-01	.20000E-01	.20000E-01	.20000E-01
F	.35000E-01	.35000E-01	.35000E-01	.35000E-01	.35000E-01	.35000E-01

*** MODELING OPTIONS USED: CONC RURAL FLAT DFAULT

*** THE FIRST 24 HOURS OF METEOROLOGICAL DATA ***

FILE: CLMBS70.BIN
SURFACE STATION NO.: 13825
NAME: SURFNAME
YEAR: 1970

FORMAT: UNFORM
UPPER AIR STATION NO.: 13895
NAME: UAIRNAME
YEAR: 1970

YEAR	MONTH	DAY	HOUR	FLOW VECTOR	SPEED (M/S)	TEMP (K)	STAB CLASS	MIXING HEIGHT (M) RURAL	MIXING HEIGHT (M) URBAN
70	1	1	1	118.0	4.60	275.0	4	951.0	951.0
70	1	1	2	118.0	4.60	275.0	4	951.0	951.0
70	1	1	3	124.0	4.60	275.0	4	951.0	951.0
70	1	1	4	143.0	4.60	275.0	4	951.0	951.0
70	1	1	5	133.0	5.10	275.0	4	951.0	951.0
70	1	1	6	142.0	4.10	273.0	4	951.0	951.0
70	1	1	7	125.0	2.10	273.0	5	951.0	951.0
70	1	1	8	123.0	1.50	273.0	4	130.0	951.0
70	1	1	9	137.0	2.60	273.0	3	267.0	951.0
70	1	1	10	151.0	3.60	274.0	3	404.0	951.0
70	1	1	11	184.0	2.60	275.0	3	540.0	951.0
70	1	1	12	146.0	3.10	276.0	3	677.0	951.0
70	1	1	13	123.0	2.60	278.0	3	814.0	951.0
70	1	1	14	159.0	4.10	278.0	3	951.0	951.0
70	1	1	15	152.0	2.60	278.0	3	951.0	951.0
70	1	1	16	224.0	2.10	278.0	4	951.0	951.0
70	1	1	17	291.0	1.00	276.0	5	951.0	934.0
70	1	1	18	287.0	1.00	276.0	6	948.0	820.0
70	1	1	19	294.0	1.00	274.0	7	944.0	706.0
70	1	1	20	287.0	1.00	273.0	7	941.0	591.0
70	1	1	21	300.0	1.00	272.0	7	938.0	477.0
70	1	1	22	302.0	1.00	273.0	7	935.0	363.0
70	1	1	23	320.0	1.00	272.0	7	932.0	248.0
70	1	1	24	320.0	1.00	272.0	7	929.0	134.0

*** NOTES: STABILITY CLASS 1=A, 2=B, 3=C, 4=D, 5=E AND 6=F.
FLOW VECTOR IS DIRECTION TOWARD WHICH WIND IS BLOWING.

*** MODELING OPTIONS USED: CONC RURAL FLAT DFAULT

*** THE 1ST HIGHEST 1-HR AVERAGE CONCENTRATION VALUES FOR SOURCE GROUP: ALL ***
INCLUDING SOURCE(S): 202 ,

*** NETWORK ID: CAR ; NETWORK TYPE: GRIDCART ***

** CONC OF OTHER IN (MICROGRAMS/CUBIC-METER) **

Y-COORD (METERS)	X-COORD (METERS) 64600.00	64650.00	64700.00	64750.00	64800.00
33700.0	11652.62210 (70110610)	11575.62110 (70061107)	10948.78520 (70061107)	10532.12700 (70041516)	11312.71290 (70041516)
33650.0	10826.92090 (70110610)	11415.53520 (70110610)	11139.84770 (70061107)	11233.24020 (70062413)	11329.26560 (70062413)
33600.0	11309.50680 (70092109)	10573.89840 (70071215)	11073.01860 (70040313)	11539.78130 (70082711)	11998.60640 (70092011)
33550.0	11406.39160 (70032914)	11176.35450 (70092109)	11374.15040 (70072715)	11860.35840 (70071215)	12159.15920 (70040313)
33500.0	11309.69730 (70032810)	10864.51560 (70050713)	11635.12790 (70050713)	12069.10060 (70091311)	12505.37790 (70072715)
33450.0	10929.89260 (70041011)	10806.63480 (70041011)	10911.06740 (70050713)	11962.63280 (70050713)	12643.12300 (70050713)
33400.0	10718.52930 (70062519)	10179.08400 (70042117)	9878.06738 (70042117)	10195.68160 (70050713)	11440.96970 (70050713)
33350.0	11168.19040 (70042117)	11623.19340 (70042117)	11868.43070 (70042117)	11800.61820 (70042117)	11302.91890 (70042117)
33300.0	13939.47270 (70030711)	11849.97750 (70051908)	12317.64840 (70032710)	12676.06640 (70032710)	12828.88180 (70042117)
33250.0	18936.83590 (70030711)	17259.98050 (70030711)	15169.15920 (70030711)	12730.75100 (70052417)	12756.85450 (70052417)
33200.0	18726.81640 (70030711)	17673.34960 (70030711)	16222.05370 (70030711)	14355.94140 (70030711)	12807.98140 (70072512)
33150.0	13333.55860 (70030711)	12541.73140 (70030711)	12226.11910 (70052009)	12502.10450 (70052009)	12531.24220 (70052009)
33100.0	11275.28130 (70052009)	11767.44040 (70052009)	12159.23630 (70052009)	12383.32810 (70052009)	12348.34570 (70052009)

*** MODELING OPTIONS USED: CONC RURAL FLAT DFAULT

*** THE 1ST HIGHEST 1-HR AVERAGE CONCENTRATION VALUES FOR SOURCE GROUP: ALL ***
INCLUDING SOURCE(S): 202 ,

*** NETWORK ID: CAR ; NETWORK TYPE: GRIDCART ***

** CONC OF OTHER IN (MICROGRAMS/CUBIC-METER) **

Y-COORD (METERS)	X-COORD (METERS) 64850.00	64900.00	64950.00	65000.00	65050.00
33700.0	11364.41990 (70041516)	12007.37500 (70072412)	12178.71390 (70072412)	12628.74020 (70052116)	12664.76660 (70020615)
33650.0	12075.05960 (70041516)	12062.36720 (70041516)	12606.56050 (70072412)	12440.21680 (70072412)	12801.64450 (70052116)
33600.0	12169.07910 (70062413)	12624.06050 (70041516)	12481.17680 (70041516)	12797.04980 (70072412)	12356.38570 (70052116)
33550.0	12596.68070 (70092011)	12723.05660 (70062413)	12738.16210 (70041516)	12359.50780 (70041516)	12253.62500 (70072412)
33500.0	12760.92290 (70040313)	12825.81050 (70082711)	12694.32910 (70062413)	12091.62300 (70041516)	12204.69040 (70082012)
33450.0	12809.08400 (70091311)	12766.52730 (70071215)	12316.11820 (70040313)	11950.11430 (70072410)	13379.22360 (70083011)
33400.0	12350.91410 (70050713)	12594.40920 (70050713)	12020.37010 (70091311)	12920.20310 (70041512)	14262.02830 (70072713)
33350.0	10687.36720 (70040311)	10672.89450 (70050713)	12234.12890 (70022112)	13769.05760 (70062112)	14783.91210 (70041512)
33300.0	12506.46000 (70042117)	11520.45410 (70042117)	12649.21390 (70052211)	14261.16210 (70071810)	14936.46390 (70022112)
33250.0	12528.40230 (70051908)	11920.76660 (70051908)	13067.64750 (70052211)	14578.04880 (70052211)	14897.45510 (70052211)
33200.0	12476.36720 (70121412)	11744.48340 (70121412)	12612.45900 (70063016)	13312.29200 (70063016)	13003.42190 (70052211)
33150.0	12196.06930 (70052009)	12008.60450 (70063016)	13739.16800 (70063016)	14854.54200 (70063016)	14730.31450 (70063016)
33100.0	11938.56150 (70052009)	11732.81640 (70072912)	13512.13870 (70072912)	14719.09380 (70072912)	14717.48050 (70072912)

*** MODELING OPTIONS USED: CONC RURAL FLAT DFAULT

*** THE 1ST HIGHEST 1-HR AVERAGE CONCENTRATION VALUES FOR SOURCE GROUP: ALL ***
INCLUDING SOURCE(S): 202 ,

*** NETWORK ID: CAR ; NETWORK TYPE: GRIDCART ***

** CONC OF OTHER IN (MICROGRAMS/CUBIC-METER) **

Y-COORD (METERS)	X-COORD (METERS) 65100.00	65150.00	65200.00	65250.00	65300.00
33700.0	12779.41700 (70092509)	12767.80270 (70072515)	12693.51270 (70042914)	12621.73630 (70072615)	12355.72270 (70081517)
33650.0	12598.42190 (70092509)	12442.58500 (70072515)	12186.11620 (70061008)	11988.42770 (70060908)	11695.08980 (70081517)
33600.0	12370.04300 (70020615)	11922.42970 (70092509)	12489.98140 (70052412)	13138.95510 (70063010)	12305.85160 (70082211)
33550.0	12058.84470 (70060912)	13144.40630 (70042112)	13929.54490 (70083112)	14467.91990 (70072414)	13775.89450 (70063010)
33500.0	13428.98240 (70081413)	14335.78710 (70062813)	14862.82230 (70050711)	14937.25100 (70052412)	14484.02340 (70063010)
33450.0	14430.69430 (70082012)	14934.83500 (70081413)	14799.60060 (70062813)	14211.56250 (70083112)	13347.03710 (70063010)
33400.0	14873.55570 (70083011)	14784.80470 (70082012)	13754.23050 (70081413)	11961.16110 (70042112)	10133.53420 (70051412)
33350.0	14716.49320 (70072713)	13893.20800 (70072410)	11470.39160 (70082012)	10136.13770 (70060121)	9947.84961 (70050101)
33300.0	14456.62600 (70062112)	12290.83400 (70041512)	11197.81250 (70061222)	8343.74023 (70012419)	9261.69043 (70092301)
33250.0	13442.88480 (70052211)	10740.59860 (70060810)	9549.87598 (70041112)	7410.58887 (70031902)	5541.80615 (70012419)
33200.0	12034.83980 (70052211)	9429.97363 (70052111)	7372.78125 (70060215)	7498.55811 (70042121)	4161.28027 (70031623)
33150.0	12746.63960 (70063016)	8841.47754 (70070611)	5697.84082 (70070611)	1999.05225 (70070614)	277.81741 (70052713)
33100.0	12884.06740 (70072912)	9471.49219 (70051911)	6007.25928 (70033112)	2102.77979 (70052210)	116.66262 (70052210)

*** MODELING OPTIONS USED: CONC RURAL FLAT DFAULT

*** THE 1ST HIGHEST 1-HR AVERAGE CONCENTRATION VALUES FOR SOURCE GROUP: ALL ***
INCLUDING SOURCE(S): 202 ,

*** NETWORK ID: CAR ; NETWORK TYPE: GRIDCART ***

** CONC OF OTHER IN (MICROGRAMS/CUBIC-METER) **

Y-COORD (METERS)	X-COORD (METERS) 65350.00	65400.00	65450.00	65500.00	65550.00
33700.0	12214.47070 (70072714)	12191.52540 (70030912)	12191.53320 (70022211)	12262.66020 (70070716)	12489.27730 (70081617)
33650.0	12344.22170 (70082211)	12539.66600 (70072411)	12519.01370 (70073113)	11732.53910 (70061612)	11695.09080 (70071317)
33600.0	13988.44630 (70082211)	14137.98140 (70072411)	14107.05960 (70061612)	12963.07420 (70061612)	12448.00390 (70072712)
33550.0	14856.00290 (70082211)	14948.10160 (70072411)	14946.49510 (70061612)	13328.43360 (70061612)	14135.47170 (70072712)
33500.0	14303.12600 (70082211)	14438.82130 (70082611)	14438.82130 (70061612)	12310.50880 (70061612)	14681.43160 (70072712)
33450.0	11651.36820 (70082211)	11773.16020 (70082611)	11773.15920 (70061612)	10512.46090 (70072712)	13316.48830 (70072712)
33400.0	9940.12598 (70101322)	8321.74414 (70081511)	8477.39063 (70051313)	8847.02637 (70062412)	10096.51860 (70061411)
33350.0	7097.92090 (70012501)	4716.55713 (70071310)	4732.07080 (70080311)	5633.49756 (70062113)	7107.51123 (70073013)
33300.0	6785.58887 (70051201)	1698.84790 (70041816)	1181.64697 (70070711)	2085.67798 (70061713)	4123.83057 (70071410)
33250.0	4427.00146 (70012720)	2055.31323 (70043022)	24.61160 (70061714)	225.96802 (70081613)	1465.56055 (70052212)
33200.0	2461.52148 (70061122)	0.00030 (70072414)	0.00032 (70072712)	1.21061 (70052212)	330.35373 (70050712)
33150.0	232.82365 (70101120)	0.00000 (0)	0.00000 (0)	0.00519 (70091214)	101.67841 (70062010)
33100.0	0.08065 (70051812)	0.00000 (70092912)	0.00000 (70070913)	0.10373 (70071612)	163.25134 (70050513)

*** MODELING OPTIONS USED: CONC RURAL FLAT DFAULT

*** THE 1ST HIGHEST 1-HR AVERAGE CONCENTRATION VALUES FOR SOURCE GROUP: ALL ***
INCLUDING SOURCE(S): 202 ,

*** NETWORK ID: CAR ; NETWORK TYPE: GRIDCART ***

** CONC OF OTHER IN (MICROGRAMS/CUBIC-METER) **

Y-COORD (METERS)	X-COORD (METERS) 65600.00	65650.00	65700.00	65750.00	65800.00
33700.0	11852.03130 (70071317)	11543.84380 (70073110)	12824.82030 (70073110)	12779.41600 (70060916)	12774.28520 (70091210)
33650.0	11314.50390 (70072712)	11946.68850 (70073110)	12524.82030 (70042413)	12737.88870 (70072914)	12835.23830 (70060909)
33600.0	13190.73830 (70072712)	12188.53320 (70090812)	11922.42970 (70060916)	12370.04200 (70031815)	12093.73050 (70071909)
33550.0	14332.69140 (70072712)	13944.81540 (70090812)	12634.89060 (70073012)	11840.93160 (70073011)	12253.62600 (70071909)
33500.0	14527.38960 (70090812)	14708.50590 (70073012)	13804.35940 (70073011)	13392.27340 (70073011)	11570.93550 (70071508)
33450.0	14281.83300 (70090812)	13793.22360 (70073011)	14936.12790 (70073011)	13362.21780 (70073011)	12240.51370 (70071912)
33400.0	11612.12500 (70071313)	13812.45310 (70073011)	13581.98630 (70073011)	14011.49610 (70071912)	14235.37790 (70071912)
33350.0	9398.23730 (70080211)	10999.57520 (70060813)	13423.28130 (70071912)	14841.68160 (70071912)	14690.63770 (70061614)
33300.0	6377.55713 (70052212)	9304.16992 (70080412)	12279.81050 (70061614)	13702.34860 (70071113)	14896.90530 (70071113)
33250.0	4152.66992 (70070712)	7420.01270 (70070712)	10745.29100 (70071914)	13710.49510 (70090611)	14399.62890 (70090611)
33200.0	2553.70288 (70050712)	5773.49561 (70072711)	9820.69434 (70060811)	13019.21190 (70091214)	14490.93360 (70091214)
33150.0	1918.64160 (70062010)	5769.01123 (70070910)	9540.39258 (70052512)	12066.26560 (70052512)	13445.49610 (70090112)
33100.0	2312.06641 (70050513)	5995.53467 (70090711)	9070.75977 (70062211)	12585.28030 (70090112)	14608.93750 (70090112)

*** MODELING OPTIONS USED: CONC RURAL FLAT DFAULT

*** THE 1ST HIGHEST 1-HR AVERAGE CONCENTRATION VALUES FOR SOURCE GROUP: ALL ***
INCLUDING SOURCE(S): 202 ,

*** NETWORK ID: CAR ; NETWORK TYPE: GRIDCART ***

** CONC OF OTHER IN (MICROGRAMS/CUBIC-METER) **

Y-COORD (METERS)	X-COORD (METERS) 65850.00	65900.00	65950.00	66000.00
33700.0	12533.46880 (70060909)	12178.70800 (70071909)	12007.37890 (70071909)	11721.23630 (70071508)
33650.0	12440.20900 (70071909)	12606.56350 (70071909)	12415.85840 (70071508)	11687.99120 (70071508)
33600.0	12797.05270 (70071909)	12817.33890 (70071508)	12280.23440 (70062115)	12377.56540 (70062115)
33550.0	12658.48240 (70071508)	12576.49320 (70062115)	12739.60740 (70062115)	12433.43750 (70081510)
33500.0	12156.06740 (70062115)	12473.02150 (70062115)	12823.85840 (70081510)	12502.21680 (70081510)
33450.0	11814.43460 (70071912)	12376.64060 (70081510)	11971.40720 (70081510)	12688.49410 (70080711)
33400.0	12995.65140 (70061614)	11806.37890 (70080711)	12594.40630 (70080711)	12812.52540 (70111315)
33350.0	13054.67380 (70071113)	12107.33890 (70071113)	11730.09080 (70111315)	11160.66600 (70111315)
33300.0	14301.04790 (70090611)	12852.21680 (70090611)	11095.07030 (70100213)	11767.84180 (70092513)
33250.0	14372.63870 (70091214)	13314.65630 (70091214)	11920.76760 (70092513)	12528.40140 (70092513)
33200.0	14217.58890 (70091214)	12837.96000 (70091214)	11727.45410 (70070908)	12540.02830 (70070908)
33150.0	13662.12300 (70090112)	12714.45210 (70090112)	11167.71090 (70090112)	11425.53220 (70122711)
33100.0	14782.60060 (70090112)	13693.98050 (70090112)	11976.55370 (70090112)	12519.09080 (70090209)

*** MODELING OPTIONS USED: CONC RURAL FLAT DFAULT

*** THE 2ND HIGHEST 1-HR AVERAGE CONCENTRATION VALUES FOR SOURCE GROUP: ALL ***
INCLUDING SOURCE(S): 202 ,

*** NETWORK ID: CAR ; NETWORK TYPE: GRIDCART ***

** CONC OF OTHER IN (MICROGRAMS/CUBIC-METER) **

Y-COORD (METERS)	X-COORD (METERS) 64600.00	64650.00	64700.00	64750.00	64800.00
33700.0	11144.71090 (70061107)	11002.40040 (70110610)	10364.78710 (70062413)	10385.92770 (70062413)	10221.17090 (70020717)
33650.0	10050.04100 (70052207)	10433.03030 (70061107)	11030.26660 (70110610)	11233.24020 (70091414)	11329.26560 (70091414)
33600.0	10198.91700 (70081714)	10542.32420 (70072715)	11073.01860 (70081415)	11379.45900 (70092011)	11986.14650 (70062413)
33550.0	11406.39160 (70052118)	10813.77640 (70050713)	11374.15040 (70072812)	11837.33300 (70040313)	12159.15920 (70081415)
33500.0	10916.43070 (70041011)	10853.19430 (70032810)	11216.88960 (70091311)	12029.53420 (70050713)	12505.37790 (70072812)
33450.0	9998.03418 (70032814)	10183.90920 (70032814)	10175.47660 (70032810)	11072.89450 (70091311)	12193.86520 (70091311)
33400.0	10202.33400 (70042117)	10179.08400 (70052011)	9878.06738 (70052011)	9402.51855 (70040311)	10130.25490 (70033110)
33350.0	11168.19040 (70052011)	11623.19340 (70052011)	11868.43070 (70052011)	11800.61820 (70052011)	11302.91890 (70052011)
33300.0	11242.80660 (70051908)	11835.18950 (70030711)	12314.68160 (70051908)	12663.54880 (70042117)	12828.88180 (70052011)
33250.0	11369.12300 (70121412)	11894.85940 (70052417)	12406.46290 (70052417)	12709.53810 (70030711)	12568.18360 (70051908)
33200.0	11455.10350 (70041012)	11985.07320 (70072512)	12457.83500 (70072512)	12764.90630 (70072512)	12807.98140 (70121414)
33150.0	11271.35740 (70052009)	11793.96970 (70052009)	11780.15920 (70041012)	12095.65430 (70041012)	12179.90630 (70041012)
33100.0	10147.99510 (70051818)	9923.61816 (70051818)	10080.87010 (70081713)	10461.59670 (70081713)	10868.48340 (70031614)

*** MODELING OPTIONS USED: CONC RURAL FLAT DFAULT

*** THE 2ND HIGHEST 1-HR AVERAGE CONCENTRATION VALUES FOR SOURCE GROUP: ALL ***
INCLUDING SOURCE(S): 202 ,

*** NETWORK ID: CAR ; NETWORK TYPE: GRIDCART ***

** CONC OF OTHER IN (MICROGRAMS/CUBIC-METER) **

Y-COORD (METERS)	X-COORD (METERS) 64850.00	64900.00	64950.00	65000.00	65050.00
33700.0	10802.25780 (70072412)	10484.37400 (70041516)	11648.09860 (70052116)	12293.92970 (70020615)	12223.21780 (70092509)
33650.0	10639.28420 (70062413)	11418.33590 (70072412)	10878.80180 (70041516)	12260.12700 (70052116)	12721.00290 (70020615)
33600.0	12169.07910 (70091414)	11367.97170 (70062413)	11755.13870 (70072412)	10883.22750 (70041516)	12093.73930 (70072412)
33550.0	12588.33790 (70082711)	12723.05660 (70091414)	11767.84380 (70062413)	11566.67680 (70072412)	10945.28420 (70052315)
33500.0	12760.92290 (70081415)	12680.21090 (70092011)	12694.32910 (70091414)	11520.70310 (70062413)	11924.97070 (70071710)
33450.0	12688.48730 (70050713)	12745.71970 (70072715)	12316.11820 (70081415)	11924.60060 (70072713)	13318.07320 (70071710)
33400.0	11364.09670 (70091311)	12149.52930 (70091311)	11923.15140 (70072715)	12586.77050 (70072713)	14262.02830 (70100111)
33350.0	10687.36720 (70052409)	10523.97070 (70033110)	12197.44920 (70052311)	13769.05760 (70072513)	14571.39750 (70070714)
33300.0	12506.46000 (70052011)	11520.45410 (70052011)	12534.34280 (70071810)	13909.08200 (70022112)	14896.90430 (70071810)
33250.0	12345.92770 (70052417)	11844.71680 (70032710)	10732.55270 (70071810)	12584.07420 (70071810)	13683.32910 (70071810)
33200.0	12460.45310 (70072512)	11577.88180 (70072512)	11045.63570 (70052211)	12458.94340 (70052211)	12755.98830 (70063016)
33150.0	11916.61230 (70041012)	11360.58890 (70052009)	11330.27050 (70072912)	12124.70510 (70072912)	11876.99900 (70072912)
33100.0	11058.60450 (70031614)	11024.59570 (70052009)	12103.74020 (70063016)	13055.52730 (70041513)	13301.97270 (70041513)

*** MODELING OPTIONS USED: CONC RURAL FLAT DFAULT

*** THE 2ND HIGHEST 1-HR AVERAGE CONCENTRATION VALUES FOR SOURCE GROUP: ALL ***
INCLUDING SOURCE(S): 202 ,

*** NETWORK ID: CAR ; NETWORK TYPE: GRIDCART ***

** CONC OF OTHER IN (MICROGRAMS/CUBIC-METER) **

Y-COORD (METERS)	X-COORD (METERS) 65100.00	65150.00	65200.00	65250.00	65300.00
33700.0	12151.69730 (70072515)	12734.26760 (70061008)	12162.71190 (70060908)	12427.68160 (70060908)	12329.74320 (70090811)
33650.0	12286.91210 (70020615)	12042.17190 (70092509)	12186.11620 (70071815)	11743.68360 (70072615)	11595.13770 (70072313)
33600.0	12141.13960 (70052116)	11535.96090 (70050711)	12355.93260 (70083112)	12821.31640 (70072414)	12013.94040 (70063010)
33550.0	12014.67680 (70062813)	13030.76070 (70050711)	13670.19820 (70052412)	14457.66990 (70063010)	12859.18650 (70072414)
33500.0	13099.94240 (70060912)	14224.88770 (70060912)	14686.80180 (70042112)	14792.23140 (70072414)	13858.26660 (70072414)
33450.0	14136.04880 (70071710)	14689.16110 (70060912)	14703.80570 (70042112)	14007.77930 (70050711)	13177.85060 (70072414)
33400.0	14806.84280 (70072410)	14535.89750 (70071710)	13691.93750 (70060912)	11842.98540 (70050711)	9843.61328 (70052412)
33350.0	14716.49320 (70100111)	13656.57420 (70072713)	11336.10640 (70071710)	9521.63184 (70051001)	9547.52148 (70102620)
33300.0	14456.62600 (70072513)	11896.92970 (70070714)	9653.16504 (70062810)	8047.25586 (70112122)	8374.93848 (70050102)
33250.0	13376.62700 (70071810)	10464.47170 (70071810)	9395.06348 (70031623)	6590.47021 (70020109)	5535.41992 (70061122)
33200.0	12015.28710 (70052111)	9305.40625 (70052110)	7083.96289 (70091507)	5556.04834 (70052821)	3834.61523 (70031701)
33150.0	10910.59280 (70052111)	8687.25391 (70052111)	5641.83789 (70070614)	1823.88477 (70070611)	150.45059 (70060215)
33100.0	12049.61820 (70051911)	9120.88770 (70033112)	5937.14014 (70052210)	2019.31836 (70033112)	101.25732 (70051812)

*** MODELING OPTIONS USED: CONC RURAL FLAT DFAULT

*** THE 2ND HIGHEST 1-HR AVERAGE CONCENTRATION VALUES FOR SOURCE GROUP: ALL ***
INCLUDING SOURCE(S): 202 ,

*** NETWORK ID: CAR ; NETWORK TYPE: GRIDCART ***

** CONC OF OTHER IN (MICROGRAMS/CUBIC-METER) **

Y-COORD (METERS)	X-COORD (METERS) 65350.00	65400.00	65450.00	65500.00	65550.00
33700.0	12214.47070 (70083009)	12169.96880 (70050715)	11922.73440 (70061409)	11922.20800 (70061409)	12355.72950 (70071317)
33650.0	12297.02830 (70050511)	12491.72270 (70082611)	12491.72560 (70061612)	11445.35350 (70070716)	11662.45020 (70081617)
33600.0	13797.79790 (70050511)	14107.05760 (70082611)	14090.82030 (70073113)	12085.98540 (70073113)	10382.68160 (70120914)
33550.0	14470.37500 (70050511)	14946.49410 (70082611)	14865.91890 (70073113)	12253.54590 (70073113)	10841.69530 (70061411)
33500.0	13707.84570 (70050511)	14401.04790 (70072411)	14282.00000 (70073113)	11415.28220 (70072712)	12206.84570 (70061411)
33450.0	10907.84770 (70050511)	11717.04200 (70051510)	11619.35250 (70051313)	10342.63870 (70060910)	12348.65330 (70061411)
33400.0	8693.36621 (70111909)	7862.82471 (70070713)	8321.74609 (70071111)	8750.66309 (70062113)	9595.86816 (70070911)
33350.0	6768.78711 (70050923)	4696.27246 (70081511)	4696.27148 (70071111)	5599.38867 (70060411)	7010.90039 (70071313)
33300.0	6250.52881 (70032421)	1698.84790 (70102714)	1094.69250 (70050512)	1981.73413 (70070911)	4033.95972 (70081613)
33250.0	4226.28516 (70100522)	1990.58044 (70081822)	23.56228 (70071413)	219.22391 (70071410)	1204.21375 (70071911)
33200.0	2461.52148 (70061521)	0.00029 (70063010)	0.00024 (70090812)	0.86426 (70071112)	251.33162 (70070712)
33150.0	230.71565 (70060215)	0.00000 (0)	0.00000 (0)	0.00480 (70062010)	101.67841 (70080111)
33100.0	0.04973 (70042111)	0.00000 (70040712)	0.00000 (70081411)	0.08072 (70052513)	130.11833 (70052513)

*** MODELING OPTIONS USED: CONC RURAL FLAT DFAULT

*** THE 2ND HIGHEST 1-HR AVERAGE CONCENTRATION VALUES FOR SOURCE GROUP: ALL ***
INCLUDING SOURCE(S): 202 ,

*** NETWORK ID: CAR ; NETWORK TYPE: GRIDCART ***

** CONC OF OTHER IN (MICROGRAMS/CUBIC-METER) **

Y-COORD (METERS)	X-COORD (METERS) 65600.00	65650.00	65700.00	65750.00	65800.00
33700.0	11340.66500 (70081617)	11014.66600 (70090815)	12223.07910 (70042413)	12754.35060 (70042413)	12774.28520 (70092209)
33650.0	11064.32230 (70061016)	11108.53520 (70013114)	12190.06740 (70073110)	12598.42290 (70060916)	12721.00000 (70031815)
33600.0	10925.67090 (70090812)	11957.01860 (70073012)	11830.06450 (70072914)	12370.04200 (70092514)	11988.37790 (70060909)
33550.0	13144.04490 (70090812)	13883.16500 (70073012)	12337.48140 (70090812)	11295.82030 (70060909)	11376.49710 (70071508)
33500.0	14230.15630 (70073012)	14509.49510 (70090812)	12353.47360 (70073012)	10580.04490 (70071909)	11365.79490 (70073011)
33450.0	14270.98630 (70073012)	13465.18460 (70073012)	11898.03910 (70060813)	11042.25880 (70071912)	10843.37300 (70061614)
33400.0	11570.53520 (70051312)	12326.64550 (70060813)	12106.37210 (70060813)	12587.97950 (70061614)	13691.80470 (70061614)
33350.0	9174.30859 (70060813)	10381.45020 (70073011)	12307.50390 (70061614)	14718.85160 (70061614)	13936.97750 (70071912)
33300.0	6351.13965 (70071911)	9089.56445 (70071112)	11822.09080 (70071912)	13702.34860 (70080512)	14896.90530 (70080512)
33250.0	4132.45898 (70071112)	7079.72754 (70050712)	10464.47360 (70071113)	13376.62600 (70071113)	14085.33500 (70091214)
33200.0	2516.41333 (70072711)	5588.47314 (70071914)	9135.19531 (70091214)	12236.64840 (70060811)	12492.97070 (70060811)
33150.0	1918.64160 (70080111)	5724.96777 (70082013)	9352.79395 (70082612)	11789.73240 (70082612)	12492.31640 (70052512)
33100.0	2088.22876 (70090711)	5730.89990 (70050513)	8924.96777 (70090711)	12251.40230 (70072413)	13730.78810 (70072413)

*** MODELING OPTIONS USED: CONC RURAL FLAT DFAULT

*** THE 2ND HIGHEST 1-HR AVERAGE CONCENTRATION VALUES FOR SOURCE GROUP: ALL ***
INCLUDING SOURCE(S): 202 ,

*** NETWORK ID: CAR ; NETWORK TYPE: GRIDCART ***

** CONC OF OTHER IN (MICROGRAMS/CUBIC-METER) **

Y-COORD (METERS)	X-COORD (METERS) 65850.00	65900.00	65950.00	66000.00
33700.0	12293.92380 (70031815)	11141.73140 (70060909)	11505.69340 (70071508)	10802.26560 (70071909)
33650.0	11803.92090 (70060909)	11978.26860 (70071508)	11418.34860 (70071909)	11599.89160 (70062115)
33600.0	12035.05470 (70071508)	11755.15040 (70071909)	12127.33110 (70071508)	10854.29690 (70081510)
33550.0	11566.68850 (70071909)	12125.14750 (70071508)	11634.71970 (70081510)	11763.40040 (70062115)
33500.0	11378.20210 (70071508)	11956.37010 (70081510)	11568.86130 (70122614)	11723.60350 (70122614)
33450.0	11395.12600 (70081510)	11075.72950 (70122614)	11834.91210 (70080711)	11997.64940 (70111315)
33400.0	12793.68360 (70071912)	11228.58500 (70061614)	12469.62890 (70111315)	12350.90140 (70080711)
33350.0	13054.67380 (70080512)	12107.33890 (70080512)	11065.40720 (70080314)	10928.87500 (70080314)
33300.0	14261.16110 (70071113)	12534.34080 (70071113)	11026.42380 (70071509)	11040.44820 (70071509)
33250.0	13522.02340 (70090611)	11728.41600 (70090611)	11587.21390 (70091214)	10966.88480 (70070908)
33200.0	11536.30760 (70060811)	10244.28030 (70070908)	11727.45410 (70071309)	12540.02830 (70071309)
33150.0	11673.00200 (70052512)	10310.42580 (70080813)	10941.21390 (70080813)	11057.69530 (70080813)
33100.0	13526.90040 (70072413)	12276.08110 (70072413)	11703.76460 (70090209)	12201.88570 (70080613)

*** MODELING OPTIONS USED: CONC RURAL FLAT DFAULT

*** THE 1ST HIGHEST 8-HR AVERAGE CONCENTRATION VALUES FOR SOURCE GROUP: ALL ***
INCLUDING SOURCE(S): 202 ,

*** NETWORK ID: CAR ; NETWORK TYPE: GRIDCART ***

** CONC OF OTHER IN (MICROGRAMS/CUBIC-METER) **

Y-COORD (METERS)	X-COORD (METERS) 64600.00	64650.00	64700.00	64750.00	64800.00
33700.0	2852.80469 (70052916)	2988.59790 (70052916)	3398.25269c(70041516)	3850.20776c(70041516)	4172.55908c(70041516)
33650.0	2665.12183c(70081716)	2884.98267 (70052916)	3136.23486 (70052916)	3732.92065c(70041516)	4289.97021c(70041516)
33600.0	3118.09912 (70101916)	2831.40991 (70033116)	2853.44287 (70033116)	3361.01001c(70041516)	4088.02563c(70041516)
33550.0	3266.93994 (70101916)	3402.46973 (70101916)	3269.26245 (70101916)	3087.97827 (70033116)	3581.56714c(70041516)
33500.0	3556.42017c(70032816)	3339.36792c(70032816)	3502.41211 (70101916)	3638.64478 (70101916)	3392.66699 (70101916)
33450.0	3348.83618c(70032816)	3438.46875c(70032816)	3358.22827c(70032816)	3382.42407 (70033116)	3764.52783 (70101916)
33400.0	3424.49268 (70082916)	3592.20825 (70082916)	3685.55298 (70082916)	3675.20630 (70082916)	3536.66895 (70082916)
33350.0	3208.41113 (70082916)	3514.17993 (70082916)	3796.62427 (70082916)	4022.09521 (70082916)	4146.05762 (70082916)
33300.0	3356.30029c(70121416)	3290.50171c(70121416)	3279.70166 (70082916)	3626.66724 (70082916)	3945.57715 (70082916)
33250.0	4177.34668c(70121416)	4240.07861c(70121416)	4239.73584c(70121416)	4152.98340c(70121416)	3953.35767c(70121416)
33200.0	4390.34082c(70121416)	4548.82471c(70121416)	4661.39746c(70121416)	4702.57861c(70121416)	4639.27197c(70121416)
33150.0	3813.46265c(70121416)	3956.85498c(70121416)	4064.39795c(70121416)	4114.93115c(70121416)	4080.33374c(70121416)
33100.0	3280.33936 (70031616)	3490.02466 (70031616)	3694.60620 (70031616)	3880.33057 (70031616)	4025.64111 (70031616)

*** MODELING OPTIONS USED: CONC RURAL FLAT DFAULT

*** THE 1ST HIGHEST 8-HR AVERAGE CONCENTRATION VALUES FOR SOURCE GROUP: ALL ***
INCLUDING SOURCE(S): 202 ,

*** NETWORK ID: CAR ; NETWORK TYPE: GRIDCART ***

** CONC OF OTHER IN (MICROGRAMS/CUBIC-METER) **

Y-COORD (METERS)	X-COORD (METERS) 64850.00	64900.00	64950.00	65000.00	65050.00
33700.0	4269.40869c(70041516)	4059.29565c(70041516)	3537.55762 (70091616)	3919.47412 (70091616)	4018.37378 (70091616)
33650.0	4687.82715c(70041516)	4793.43701c(70041516)	4494.93652c(70041516)	3789.44946 (70091616)	4125.45313 (70091616)
33600.0	4769.91553c(70041516)	5255.29932c(70041516)	5357.19873c(70041516)	4921.89404c(70041516)	3961.31055 (70091616)
33550.0	4445.63477c(70041516)	5270.24658c(70041516)	5848.26660c(70041516)	5914.80762c(70041516)	5262.52393c(70041516)
33500.0	3769.31860c(70041516)	4774.91455c(70041516)	5745.28809c(70041516)	6394.37402c(70041516)	6347.08496c(70041516)
33450.0	3890.25098 (70101916)	3895.21411c(70041516)	5017.64795c(70041516)	6088.19531c(70041516)	6698.43262c(70041516)
33400.0	3427.70117 (70101916)	4061.32666 (70101916)	4151.02197 (70101916)	5045.26904c(70041516)	6032.40283c(70041516)
33350.0	4117.61279 (70082916)	3891.80029 (70082916)	3535.69385 (70101916)	4410.25732 (70101916)	4607.36572c(70041516)
33300.0	4186.54297 (70082916)	4279.04297 (70082916)	4139.39014 (70082916)	3697.47900 (70082916)	3643.78052c(70063016)
33250.0	3614.87231c(70121416)	3592.70728 (70082916)	3705.78955 (70082916)	3583.93628 (70082916)	3541.45728 (70052116)
33200.0	4431.65186c(70121416)	4038.30420c(70121416)	3429.86377c(70121416)	3306.58984 (70052116)	3533.10376 (70052116)
33150.0	3925.64771c(70121416)	3661.04419 (70031616)	3433.35742 (70031616)	3118.34106c(70071216)	3288.44458c(70071216)
33100.0	4098.08740 (70031616)	4051.39941 (70031616)	3825.38599 (70031616)	3355.49463 (70031616)	3578.59814c(70071216)

*** MODELING OPTIONS USED: CONC RURAL FLAT DFAULT

*** THE 1ST HIGHEST 8-HR AVERAGE CONCENTRATION VALUES FOR SOURCE GROUP: ALL ***
INCLUDING SOURCE(S): 202 ,

*** NETWORK ID: CAR ; NETWORK TYPE: GRIDCART ***

** CONC OF OTHER IN (MICROGRAMS/CUBIC-METER) **

Y-COORD (METERS)	X-COORD (METERS) 65100.00	65150.00	65200.00	65250.00	65300.00
33700.0	3912.18237 (70091616)	3590.83887 (70050916)	3770.65845 (70042916)	4085.22363c(70072616)	5078.40479c(70072616)
33650.0	4143.23877 (70091616)	3909.24658 (70091616)	3694.91504 (70052816)	3969.04980 (70042916)	5034.74072c(70072616)
33600.0	4208.06152 (70091616)	4104.54883 (70091616)	3715.76733 (70043016)	3783.29175 (70042916)	4709.04248c(70072616)
33550.0	3968.51831 (70091616)	4068.99756 (70091616)	3856.73926 (70051416)	3758.37573 (70051416)	4034.87207c(70072616)
33500.0	5336.55811c(70041516)	3684.94263 (70091616)	3806.41919c(70063016)	3925.29712c(70063016)	3491.07886 (70111916)
33450.0	6362.62158c(70041516)	4867.75879c(70041516)	3674.61499c(70063016)	3924.66528c(70063016)	3543.92236 (70042724)
33400.0	6397.98193c(70041516)	5662.12842c(70041516)	3770.22974c(70041516)	3467.42627 (70060116)	3582.47754 (70112608)
33350.0	5295.89111c(70041516)	5286.05713c(70041516)	4038.92114c(70041516)	3434.87549c(70041908)	2640.55591c(70050108)
33300.0	4856.34961 (70101916)	4702.52734 (70101916)	3099.47925c(70041516)	3054.57910 (70100616)	2673.12231c(70041908)
33250.0	3319.33789c(70063016)	3346.10156 (70101916)	5546.96191 (70101916)	2914.49487 (70101916)	1851.06250 (70053116)
33200.0	3446.30981 (70052116)	2799.02734 (70052116)	2128.21240c(70031908)	1988.81555c(70031908)	2088.27539 (70101916)
33150.0	3186.30933c(70071216)	2633.46729c(70071216)	1628.60547c(70071216)	518.42297c(70071216)	34.78104 (70052716)
33100.0	3534.77979c(70071216)	2959.78174c(70071216)	1842.24133c(70071216)	586.15265c(70071216)	26.47220c(70071216)

*** MODELING OPTIONS USED: CONC RURAL FLAT DFAULT

*** THE 1ST HIGHEST 8-HR AVERAGE CONCENTRATION VALUES FOR SOURCE GROUP: ALL ***
INCLUDING SOURCE(S): 202 ,

*** NETWORK ID: CAR ; NETWORK TYPE: GRIDCART ***

** CONC OF OTHER IN (MICROGRAMS/CUBIC-METER) **

Y-COORD (METERS)	X-COORD (METERS) 65350.00	65400.00	65450.00	65500.00	65550.00
33700.0	5716.40576c(70072616)	5646.85205c(70072616)	4673.55420c(70072616)	4373.09570 (70061016)	4832.48047 (70061016)
33650.0	5879.70654c(70072616)	5905.30322c(70072616)	4815.60303c(70072616)	4504.93701 (70061016)	4968.09766 (70061016)
33600.0	5762.04736c(70072616)	5917.24365c(70072616)	4737.01416c(70072616)	4453.20020 (70061016)	4877.99121 (70061016)
33550.0	5237.31738c(70072616)	5541.50586c(70072616)	4330.94971c(70072616)	4110.35986 (70061016)	4437.11621 (70061016)
33500.0	4310.66553c(70072616)	4765.10010c(70072616)	3606.43921c(70072616)	3480.86816 (70061016)	3600.91211 (70061016)
33450.0	3130.75391 (70111916)	3468.05493c(70072616)	2876.69873 (70070716)	2884.20459 (70070716)	3460.94409c(70073016)
33400.0	3993.11182 (70111916)	2062.93335 (70071316)	2199.54565 (70070716)	2160.78564 (70071416)	3230.12354c(70073016)
33350.0	3147.57056 (70112624)	1053.30859 (70071316)	1205.92212 (70070716)	1281.95374 (70061716)	2362.14063c(70073016)
33300.0	2422.39990 (70112608)	507.74344 (70111916)	273.85651 (70070716)	490.56937 (70061716)	1061.91821c(70073016)
33250.0	1290.67371 (70060116)	718.89050 (70111916)	4.03408 (70061716)	38.08597c(70081616)	297.38733 (70052216)
33200.0	616.86230c(70120824)	0.00005c(70063016)	0.00005c(70072716)	0.20002 (70052216)	41.29422 (70050716)
33150.0	33.82330c(70031908)	0.00000 (0)	0.00000 (0)	0.00075 (70091216)	15.44101 (70070916)
33100.0	0.01008 (70051816)	0.00000 (70092916)	0.00000 (70070916)	0.01483c(70071616)	27.20856c(70050516)

*** MODELING OPTIONS USED: CONC RURAL FLAT DFAULT

*** THE 1ST HIGHEST 8-HR AVERAGE CONCENTRATION VALUES FOR SOURCE GROUP: ALL ***
INCLUDING SOURCE(S): 202 ,

*** NETWORK ID: CAR ; NETWORK TYPE: GRIDCART ***

** CONC OF OTHER IN (MICROGRAMS/CUBIC-METER) **

Y-COORD (METERS)	X-COORD (METERS) 65600.00	65650.00	65700.00	65750.00	65800.00
33700.0	4812.76709 (70061016)	4131.14893 (70061016)	3926.92456c(70081616)	4215.68750c(70081616)	3934.91089c(70081616)
33650.0	4766.85791 (70061016)	3807.43604 (70061016)	4341.90674c(70081616)	4358.05029c(70081616)	3832.10669c(70081616)
33600.0	4432.27441 (70061016)	4051.80835c(70081616)	4586.64844c(70081616)	4289.48828c(70081616)	3505.68555c(70081616)
33550.0	4135.92432c(70073016)	4639.29053c(70073016)	4560.00195c(70081616)	4081.05273c(70073016)	3514.19141c(70073016)
33500.0	4632.60400c(70073016)	5182.76709c(70073016)	4930.04004c(70073016)	4237.82324c(70073016)	4040.14819 (70071916)
33450.0	4944.82422c(70073016)	5321.29590c(70073016)	4772.27832c(70073016)	4293.20215 (70071916)	4568.12988 (70071916)
33400.0	4580.50391c(70073016)	4663.00830c(70073016)	4137.15771 (70071916)	4820.16455 (70071916)	4938.42822 (70071916)
33350.0	3226.38403c(70073016)	3277.71094 (70071916)	4507.46436 (70071916)	5029.35498 (70071916)	4930.62061 (70071916)
33300.0	1627.40320 (70071916)	3084.57446 (70071916)	4216.81348 (70071916)	4557.37061 (70071916)	4260.98877 (70071916)
33250.0	987.68561 (70071916)	2162.79883 (70071916)	3046.99268 (70071916)	3307.86890 (70071916)	3467.18335c(70082616)
33200.0	360.65402 (70071916)	1186.09705c(70082616)	2241.86035c(70082616)	2919.74609c(70082616)	3063.84253c(70082616)
33150.0	414.41556 (70070916)	1387.28125 (70070916)	2273.10913 (70070916)	2726.06519 (70070916)	3226.44458 (70091216)
33100.0	385.34439c(70050516)	1200.83582 (70070916)	1989.72595 (70070916)	2487.23755 (70091216)	3055.98950c(70090116)

*** MODELING OPTIONS USED: CONC RURAL FLAT DFAULT

*** THE 1ST HIGHEST 8-HR AVERAGE CONCENTRATION VALUES FOR SOURCE GROUP: ALL ***
INCLUDING SOURCE(S): 202 ,

*** NETWORK ID: CAR ; NETWORK TYPE: GRIDCART ***

** CONC OF OTHER IN (MICROGRAMS/CUBIC-METER) **

Y-COORD (METERS)	X-COORD (METERS) 65850.00	65900.00	65950.00	66000.00
33700.0	3341.64282c(70081616)	3065.31567 (70091216)	2707.37036 (70091216)	2883.93311c(70062116)
33650.0	3053.97778 (70091216)	2847.86987c(70062116)	3155.85620c(70062116)	3226.04175c(70062116)
33600.0	3108.86230 (70071916)	3402.69385c(70062116)	3501.02295c(70062116)	3333.28540c(70062116)
33550.0	3598.03247 (70071916)	3715.59253c(70062116)	3522.90601c(70062116)	3940.33203c(70083116)
33500.0	4040.34229 (70071916)	3774.83276 (70071916)	4091.91479c(70083116)	4030.05493c(70083116)
33450.0	4413.96973 (70071916)	4037.27319c(70083116)	3858.48242c(70083116)	3356.90942c(70083116)
33400.0	4609.05322 (70071916)	4027.47876 (70071916)	3379.89014 (70071916)	2777.32080 (70071916)
33350.0	4410.28125 (70071916)	3720.82593 (70071916)	3054.53369 (70100216)	3220.42627 (70100216)
33300.0	3702.32251 (70071916)	3500.86377 (70100216)	3748.50317 (70100216)	3836.49707 (70100216)
33250.0	3560.69482 (70100216)	3924.76416 (70100216)	4061.38037 (70100216)	4038.15088 (70100216)
33200.0	3276.84546 (70100216)	3545.25317 (70100216)	3611.61646 (70100216)	3543.19824 (70100216)
33150.0	3428.24609 (70091216)	3358.13745 (70091216)	3113.21899 (70091216)	2791.18311c(70090116)
33100.0	3369.04712c(70090116)	3413.38208c(70090116)	3267.23682c(70090116)	3262.84155c(70122716)

*** MODELING OPTIONS USED: CONC RURAL FLAT DFAULT

*** THE 2ND HIGHEST 8-HR AVERAGE CONCENTRATION VALUES FOR SOURCE GROUP: ALL ***
INCLUDING SOURCE(S): 202 ,

*** NETWORK ID: CAR ; NETWORK TYPE: GRIDCART ***

** CONC OF OTHER IN (MICROGRAMS/CUBIC-METER) **

Y-COORD (METERS)	X-COORD (METERS) 64600.00	64650.00	64700.00	64750.00	64800.00
33700.0	2745.81055 (70082816)	2899.80835c(70041516)	3244.32422c(70092016)	3498.20435c(70092016)	3572.10718c(70092016)
33650.0	2585.26514 (70033116)	2742.44043 (70082816)	3128.36475c(70041516)	3396.04272c(70092016)	3708.31421c(70092016)
33600.0	2835.37988 (70033116)	2811.30933 (70101916)	2843.67920 (70052916)	3224.03247 (70052916)	3484.74829c(70092016)
33550.0	3076.94775 (70033116)	3096.39746 (70033116)	3090.57861 (70033116)	3021.86426 (70052116)	3378.22949 (70052116)
33500.0	3047.26465 (70033116)	3215.83154 (70033116)	3305.00586 (70033116)	3327.63940 (70033116)	3311.82593 (70033116)
33450.0	3160.90820 (70082916)	3144.46240 (70082916)	3194.06104 (70033116)	3279.06592 (70101916)	3472.07813 (70033116)
33400.0	2690.45728c(70051916)	2856.47827c(70051916)	2965.09180c(70032816)	3000.12012c(70032816)	3233.85083 (70033116)
33350.0	2533.11499c(70052016)	2637.21924c(70052016)	2778.33008c(70051916)	2987.52710c(70051916)	3092.43018c(70051916)
33300.0	2612.63257 (70082916)	2935.89795 (70082916)	3159.55884c(70121416)	2950.46948c(70121416)	2872.96924c(70052016)
33250.0	2965.29565c(70011416)	3069.80444c(70011416)	3137.06836c(70011416)	3147.17114c(70011416)	3074.95044c(70011416)
33200.0	3156.94922c(70011416)	3331.04395c(70011416)	3484.63550c(70011416)	3599.01001c(70011416)	3647.49390c(70011416)
33150.0	3058.36792 (70031616)	3241.08203 (70031616)	3416.05078 (70031616)	3570.25024 (70031616)	3683.80591 (70031616)
33100.0	2741.44775c(70121416)	2793.41675c(70121416)	2811.10767c(70121416)	2780.29028c(70121416)	2895.15820c(70042116)

*** MODELING OPTIONS USED: CONC RURAL FLAT DFAULT

*** THE 2ND HIGHEST 8-HR AVERAGE CONCENTRATION VALUES FOR SOURCE GROUP: ALL ***
INCLUDING SOURCE(S): 202 ,

*** NETWORK ID: CAR ; NETWORK TYPE: GRIDCART ***

** CONC OF OTHER IN (MICROGRAMS/CUBIC-METER) **

Y-COORD (METERS)	X-COORD (METERS) 64850.00	64900.00	64950.00	65000.00	65050.00
33700.0	3457.82422c(70092016)	3277.51733c(70052316)	3516.45483c(70041516)	3063.78467 (70011108)	3241.75586 (70012716)
33650.0	3804.55688c(70092016)	3664.58862c(70092016)	3492.12134c(70052316)	3768.61548c(70041516)	3162.24585c(70081916)
33600.0	3858.32520c(70092016)	3975.92896c(70092016)	3799.62769c(70092016)	3642.99658c(70052316)	3940.36328c(70041516)
33550.0	3656.44873 (70052116)	3893.51978c(70092016)	4023.99634c(70092016)	3796.43091c(70092016)	3659.10278c(70052316)
33500.0	3628.54639 (70052116)	3950.78809 (70052116)	4087.51611 (70052116)	3975.03735 (70052116)	3680.65820c(70052316)
33450.0	3469.62671 (70033116)	3800.68335 (70052116)	4139.91357 (70052116)	4216.54541 (70052116)	3933.08130 (70052116)
33400.0	3413.63672 (70033116)	3455.57446 (70033116)	3908.06885c(70041516)	4113.79785 (70052116)	4033.20337 (70052116)
33350.0	3029.78125c(70051916)	3024.51514 (70033116)	3451.29712 (70082916)	3698.98608 (70052116)	4400.50635 (70101916)
33300.0	2879.47852c(70051916)	2960.10547c(70051916)	3166.75806c(70052416)	3407.12012c(70063016)	3541.75244 (70101916)
33250.0	3346.91699 (70082916)	3120.01685c(70121416)	3135.65161 (70052116)	3441.71045 (70052116)	3419.48438c(70063016)
33200.0	3594.26685c(70011416)	3395.78442c(70011416)	3008.92114c(70011416)	3079.45215c(70063016)	3159.76587c(70063016)
33150.0	3727.55444 (70031616)	3612.48218c(70121416)	3109.49854c(70121416)	2992.82300 (70031616)	2800.72339c(70063016)
33100.0	2962.34497c(70042116)	2947.25928c(70042116)	2936.17847c(70041516)	3316.18433c(70071216)	2815.38940c(70041516)

*** MODELING OPTIONS USED: CONC RURAL FLAT DFAULT

*** THE 2ND HIGHEST 8-HR AVERAGE CONCENTRATION VALUES FOR SOURCE GROUP: ALL ***
INCLUDING SOURCE(S): 202 ,

*** NETWORK ID: CAR ; NETWORK TYPE: GRIDCART ***

** CONC OF OTHER IN (MICROGRAMS/CUBIC-METER) **

Y-COORD (METERS)	X-COORD (METERS) 65100.00	65150.00	65200.00	65250.00	65300.00
33700.0	3521.16504 (70012716)	3565.05835 (70091616)	3468.28271 (70052816)	3970.06396 (70042916)	3602.74023 (70042916)
33650.0	3446.25317 (70012716)	3690.04590 (70043016)	3644.96973 (70042916)	3852.73828c(70072616)	3755.55835 (70042916)
33600.0	3260.59619c(70081916)	3699.19409 (70043016)	3702.86646 (70051416)	3569.45996 (70052816)	3748.04199 (70042916)
33550.0	3929.98047c(70041516)	3461.85107 (70043016)	3780.74414 (70043016)	3610.82983 (70052816)	3846.93359 (70111916)
33500.0	3424.14917c(70052316)	3564.14624c(70041516)	3667.21924 (70051416)	3825.79932 (70051416)	3323.79175c(70063016)
33450.0	3779.71484 (70062916)	3637.14746c(70062816)	3314.59912 (70060916)	3534.08032 (70051416)	3381.87988c(70063016)
33400.0	4195.60254 (70062916)	3916.28442 (70062916)	3470.28833c(70062816)	3328.80566c(70063016)	3433.84375 (70121524)
33350.0	3854.82690 (70062916)	4087.51294 (70062916)	3442.37842 (70062916)	3430.62744 (70011108)	2495.99268 (70041824)
33300.0	3611.13770c(70063016)	3825.22021 (70020116)	3031.31592 (70062916)	2957.62231 (70053116)	2671.71362 (70011108)
33250.0	3290.82300 (70052116)	2766.61694c(70063016)	3433.93628 (70020116)	2745.38159 (70020116)	1821.76221 (70100616)
33200.0	2897.59790c(70063016)	2171.42065c(70063016)	1630.98315 (70052116)	1254.72058c(70042124)	1330.92712 (70020116)
33150.0	2626.74805 (70052116)	2153.13037 (70070616)	1424.77612 (70070616)	478.85336 (70070616)	22.46587c(70071216)
33100.0	2430.41431c(70051916)	1758.34363c(70051916)	1058.84912 (70070616)	317.42792 (70070616)	14.63278 (70052216)

*** MODELING OPTIONS USED: CONC RURAL FLAT DFAULT

*** THE 2ND HIGHEST 8-HR AVERAGE CONCENTRATION VALUES FOR SOURCE GROUP: ALL ***
INCLUDING SOURCE(S): 202 ,

*** NETWORK ID: CAR ; NETWORK TYPE: GRIDCART ***

** CONC OF OTHER IN (MICROGRAMS/CUBIC-METER) **

Y-COORD (METERS)	X-COORD (METERS) 65350.00	65400.00	65450.00	65500.00	65550.00
33700.0	3590.40796 (70051516)	3701.12256 (70073116)	4156.45361 (70073116)	3921.24414 (70073116)	3895.42651 (70091916)
33650.0	3819.79419 (70051516)	3975.40942 (70051516)	4336.95508 (70073116)	4026.25195 (70073116)	3912.34912 (70091916)
33600.0	3944.71313 (70051516)	4166.91162 (70051516)	4330.78662 (70073116)	3940.62720 (70073116)	3799.61304 (70061116)
33550.0	3871.86841 (70051516)	4131.88965 (70051516)	4035.85864 (70073116)	3578.70239 (70073116)	3733.77026 (70061116)
33500.0	3530.97339 (70051516)	3790.79614 (70051516)	3439.52710 (70073116)	3352.55859 (70070716)	3313.13623 (70061116)
33450.0	2978.80444c(70072616)	2996.21875 (70051516)	2876.14722c(70050516)	2813.54614 (70071416)	2873.78247 (70071416)
33400.0	3110.64209 (70112616)	1868.06006c(70050516)	2039.37207c(70050516)	2084.56348 (70070716)	2348.92969 (70071316)
33350.0	2997.72925 (70111916)	976.55548 (70070716)	1001.28119c(70050516)	1271.99109 (70071416)	1693.53064 (70071316)
33300.0	2158.62646 (70121524)	434.97745 (70112616)	204.12617c(70050516)	441.53506 (70071416)	947.52673 (70052216)
33250.0	1125.72729 (70012508)	611.15546 (70112616)	3.98811 (70070716)	38.08504 (70071416)	225.69737 (70071916)
33200.0	567.72546 (70053116)	0.00004c(70083116)	0.00004c(70073016)	0.12344 (70071916)	33.72645c(70072716)
33150.0	32.94580c(70053016)	0.00000 (0)	0.00000 (0)	0.00070c(70082616)	12.76942 (70062016)
33100.0	0.00711c(70042116)	0.00000c(70071816)	0.00000 (70081416)	0.01434c(70070316)	23.24430 (70090716)

*** MODELING OPTIONS USED: CONC RURAL FLAT DFAULT

*** THE 2ND HIGHEST 8-HR AVERAGE CONCENTRATION VALUES FOR SOURCE GROUP: ALL ***
INCLUDING SOURCE(S): 202 ,

*** NETWORK ID: CAR ; NETWORK TYPE: GRIDCART ***

** CONC OF OTHER IN (MICROGRAMS/CUBIC-METER) **

Y-COORD (METERS)	X-COORD (METERS) 65600.00	65650.00	65700.00	65750.00	65800.00
33700.0	4082.93848 (70091916)	3263.53296 (70091916)	3236.24707 (70042416)	3134.79834 (70060916)	3213.90234 (70060916)
33650.0	3816.87964 (70091916)	3556.62329c(70081616)	3396.34985c(70073016)	3271.70117 (70060916)	3084.40869 (70060916)
33600.0	3628.52417c(70073016)	4026.83154c(70073016)	3964.29468c(70073016)	3631.10571c(70073016)	3212.86963c(70073016)
33550.0	3727.30200 (70061016)	4360.29248c(70081616)	4556.86865c(70073016)	3923.56445c(70081616)	3430.77246 (70071916)
33500.0	3435.36401c(70081616)	4342.06885c(70081616)	4126.29736c(70081616)	3625.60889 (70071916)	3561.58740c(70062116)
33450.0	3448.37817c(70081616)	3870.00464c(70081616)	3497.81860 (70071916)	3852.22607c(70073016)	3595.70898c(70082616)
33400.0	2995.11255c(70081616)	2946.63574 (70071916)	3839.25586c(70073016)	3263.72046c(70082616)	3784.08936c(70082616)
33350.0	2137.49536 (70071316)	3012.01563c(70073016)	2566.60522c(70082616)	3424.16479c(70082616)	3823.36377c(70082616)
33300.0	1445.44226 (70052216)	1743.09692 (70071116)	2591.95947c(70082616)	3419.06128c(70082616)	3693.40820c(70082616)
33250.0	717.06714 (70071116)	1428.81152 (70071116)	2461.28857c(70082616)	3265.71118c(70082616)	3108.30835 (70071916)
33200.0	359.48776c(70072716)	1042.45239 (70071916)	1727.81250 (70070916)	2401.80273 (70091216)	2921.67090 (70091216)
33150.0	299.27643c(70082016)	956.62469c(70082016)	1678.46191c(70082616)	2636.77173 (70091216)	2811.60718c(70090116)
33100.0	365.69995 (70090716)	988.97095 (70090716)	1578.24414 (70062616)	2426.19458c(70090116)	3046.10132 (70091216)

*** MODELING OPTIONS USED: CONC RURAL FLAT DFAULT

*** THE 2ND HIGHEST 8-HR AVERAGE CONCENTRATION VALUES FOR SOURCE GROUP: ALL ***
INCLUDING SOURCE(S): 202 ,

*** NETWORK ID: CAR ; NETWORK TYPE: GRIDCART ***

** CONC OF OTHER IN (MICROGRAMS/CUBIC-METER) **

Y-COORD (METERS)	X-COORD (METERS) 65850.00	65900.00	65950.00	66000.00
33700.0	3153.26758 (70091216)	2629.70410c(70081616)	2643.48511c(70062116)	2800.02612c(70082616)
33650.0	3052.24829c(70081616)	2786.34009 (70091216)	2992.31299c(70082616)	3068.02734c(70082616)
33600.0	3004.43555c(70062116)	3155.66479c(70082616)	3292.58862c(70082616)	3218.02441c(70083116)
33550.0	3569.80249c(70062116)	3491.90942c(70082616)	3497.30078c(70083116)	3110.81396c(70062116)
33500.0	3786.85547c(70062116)	3689.04663c(70083116)	3382.70825 (70071916)	3102.16211c(70122616)
33450.0	3793.04321c(70082616)	3993.06982 (70071916)	3472.72095 (70071916)	2948.10132 (70071916)
33400.0	3849.49438c(70082616)	3596.66821c(70082616)	3172.79150c(70082616)	2700.55029c(70082616)
33350.0	3776.47192c(70082616)	3431.28833c(70082616)	3024.98267 (70071916)	2873.19971 (70071516)
33300.0	3569.25928c(70082616)	3183.36963c(70082616)	3039.30566 (70071516)	2975.26978 (70071516)
33250.0	3292.46143c(70082616)	2928.02588 (70071516)	2886.78784 (70071516)	2737.55273 (70071516)
33200.0	3117.34839 (70091216)	3069.85156 (70091216)	2861.21484 (70091216)	2575.92358 (70091216)
33150.0	3101.23560c(70090116)	3147.35107c(70090116)	3017.15454c(70090116)	2785.39258 (70091216)
33100.0	3249.97485 (70091216)	3195.28589 (70091216)	2972.51538 (70091216)	3019.90674c(70090116)

*** MODELING OPTIONS USED: CONC RURAL FLAT DFAULT

*** THE MAXIMUM 50 1-HR AVERAGE CONCENTRATION VALUES FOR SOURCE GROUP: ALL ***
INCLUDING SOURCE(S): 202 ,

** CONC OF OTHER IN (MICROGRAMS/CUBIC-METER) **

RANK	CONC	(YYMMDDHH)	AT	RECEPTOR (XR,YR)		OF TYPE	RANK	CONC	(YYMMDDHH)	AT	RECEPTOR (XR,YR)		OF TYPE
1.	18936.83590	(70030711)	AT (	64600.00,	33250.00)	GC	26.	14806.84280	(70072410)	AT (	65100.00,	33400.00)	GC
2.	18726.81640	(70030711)	AT (	64600.00,	33200.00)	GC	27.	14799.60060	(70062813)	AT (	65200.00,	33450.00)	GC
3.	17673.34960	(70030711)	AT (	64650.00,	33200.00)	GC	28.	14792.23140	(70072414)	AT (	65250.00,	33500.00)	GC
4.	17259.98050	(70030711)	AT (	64650.00,	33250.00)	GC	29.	14784.80470	(70082012)	AT (	65150.00,	33400.00)	GC
5.	16222.05370	(70030711)	AT (	64700.00,	33200.00)	GC	30.	14783.91210	(70041512)	AT (	65050.00,	33350.00)	GC
6.	15169.15920	(70030711)	AT (	64700.00,	33250.00)	GC	31.	14782.60060	(70090112)	AT (	65850.00,	33100.00)	GC
7.	14948.10160	(70072411)	AT (	65400.00,	33550.00)	GC	32.	14746.22460	(70083112)	AT (	65250.00,	33500.00)	GC
8.	14946.49510	(70061612)	AT (	65450.00,	33550.00)	GC	33.	14730.31450	(70063016)	AT (	65050.00,	33150.00)	GC
9.	14946.49410	(70082611)	AT (	65400.00,	33550.00)	GC	34.	14729.63770	(70071710)	AT (	65100.00,	33400.00)	GC
10.	14937.25100	(70052412)	AT (	65250.00,	33500.00)	GC	35.	14719.09380	(70072912)	AT (	65000.00,	33100.00)	GC
11.	14936.46390	(70022112)	AT (	65050.00,	33300.00)	GC	36.	14718.85160	(70061614)	AT (	65750.00,	33350.00)	GC
12.	14936.12790	(70073011)	AT (	65700.00,	33450.00)	GC	37.	14717.48050	(70072912)	AT (	65050.00,	33100.00)	GC
13.	14934.83500	(70081413)	AT (	65150.00,	33450.00)	GC	38.	14716.49320	(70072713)	AT (	65100.00,	33350.00)	GC
14.	14897.45510	(70052211)	AT (	65050.00,	33250.00)	GC	39.	14716.49320	(70100111)	AT (	65100.00,	33350.00)	GC
15.	14896.90530	(70071113)	AT (	65800.00,	33300.00)	GC	40.	14708.50590	(70073012)	AT (	65650.00,	33500.00)	GC
16.	14896.90530	(70080512)	AT (	65800.00,	33300.00)	GC	41.	14703.80570	(70042112)	AT (	65200.00,	33450.00)	GC
17.	14896.90530	(70082613)	AT (	65800.00,	33300.00)	GC	42.	14693.20120	(70051510)	AT (	65400.00,	33550.00)	GC
18.	14896.90430	(70071810)	AT (	65050.00,	33300.00)	GC	43.	14690.63770	(70061614)	AT (	65800.00,	33350.00)	GC
19.	14873.55570	(70083011)	AT (	65100.00,	33400.00)	GC	44.	14689.16110	(70060912)	AT (	65150.00,	33450.00)	GC
20.	14865.91890	(70073113)	AT (	65450.00,	33550.00)	GC	45.	14686.80180	(70042112)	AT (	65200.00,	33500.00)	GC
21.	14862.82230	(70050711)	AT (	65200.00,	33500.00)	GC	46.	14681.43160	(70072712)	AT (	65550.00,	33500.00)	GC
22.	14856.00290	(70082211)	AT (	65350.00,	33550.00)	GC	47.	14642.19630	(70062112)	AT (	65050.00,	33300.00)	GC
23.	14854.54200	(70063016)	AT (	65000.00,	33150.00)	GC	48.	14642.19630	(70072513)	AT (	65050.00,	33300.00)	GC
24.	14841.68160	(70071912)	AT (	65750.00,	33350.00)	GC	49.	14608.93750	(70090112)	AT (	65800.00,	33100.00)	GC
25.	14830.44430	(70052311)	AT (	65050.00,	33300.00)	GC	50.	14578.04880	(70052211)	AT (	65000.00,	33250.00)	GC

*** RECEPTOR TYPES: GC = GRIDCART
GP = GRIDPOLR
DC = DISCCART
DP = DISCPOLR
BD = BOUNDARY

*** MODELING OPTIONS USED: CONC RURAL FLAT DFAULT

*** THE MAXIMUM 50 8-HR AVERAGE CONCENTRATION VALUES FOR SOURCE GROUP: ALL ***
INCLUDING SOURCE(S): 202 ,

** CONC OF OTHER IN (MICROGRAMS/CUBIC-METER) **

RANK	CONC	(YYMMDDHH)	AT	RECEPTOR (XR,YR)		OF TYPE	RANK	CONC	(YYMMDDHH)	AT	RECEPTOR (XR,YR)		OF TYPE
1.	6698.43262c	(70041516)	AT (	65050.00,	33450.00)	GC	26.	5262.52393c	(70041516)	AT (	65050.00,	33550.00)	GC
2.	6397.98193c	(70041516)	AT (	65100.00,	33400.00)	GC	27.	5255.29932c	(70041516)	AT (	64900.00,	33600.00)	GC
3.	6394.37402c	(70041516)	AT (	65000.00,	33500.00)	GC	28.	5237.31738c	(70072616)	AT (	65350.00,	33550.00)	GC
4.	6362.62158c	(70041516)	AT (	65100.00,	33450.00)	GC	29.	5182.76709c	(70073016)	AT (	65650.00,	33500.00)	GC
5.	6347.08496c	(70041516)	AT (	65050.00,	33500.00)	GC	30.	5078.40479c	(70072616)	AT (	65300.00,	33700.00)	GC
6.	6088.19531c	(70041516)	AT (	65000.00,	33450.00)	GC	31.	5045.26904c	(70041516)	AT (	65000.00,	33400.00)	GC
7.	6032.40283c	(70041516)	AT (	65050.00,	33400.00)	GC	32.	5034.74072c	(70072616)	AT (	65300.00,	33650.00)	GC
8.	5917.24365c	(70072616)	AT (	65400.00,	33600.00)	GC	33.	5029.35498	(70071916)	AT (	65750.00,	33350.00)	GC
9.	5914.80762c	(70041516)	AT (	65000.00,	33550.00)	GC	34.	5017.64795c	(70041516)	AT (	64950.00,	33450.00)	GC
10.	5905.30322c	(70072616)	AT (	65400.00,	33650.00)	GC	35.	4968.09766	(70061016)	AT (	65550.00,	33650.00)	GC
11.	5879.70654c	(70072616)	AT (	65350.00,	33650.00)	GC	36.	4944.82422c	(70073016)	AT (	65600.00,	33450.00)	GC
12.	5848.26660c	(70041516)	AT (	64950.00,	33550.00)	GC	37.	4938.42822	(70071916)	AT (	65800.00,	33400.00)	GC
13.	5762.04736c	(70072616)	AT (	65350.00,	33600.00)	GC	38.	4930.62061	(70071916)	AT (	65800.00,	33350.00)	GC
14.	5745.28809c	(70041516)	AT (	64950.00,	33500.00)	GC	39.	4930.04004c	(70073016)	AT (	65700.00,	33500.00)	GC
15.	5716.40576c	(70072616)	AT (	65350.00,	33700.00)	GC	40.	4921.89404c	(70041516)	AT (	65000.00,	33600.00)	GC
16.	5662.12842c	(70041516)	AT (	65150.00,	33400.00)	GC	41.	4877.99121	(70061016)	AT (	65550.00,	33600.00)	GC
17.	5646.85205c	(70072616)	AT (	65400.00,	33700.00)	GC	42.	4867.75879c	(70041516)	AT (	65150.00,	33450.00)	GC
[illegible]	5546.96191	(70101916)	AT (	65200.00,	33250.00)	GC	43.	4856.34961	(70101916)	AT (	65100.00,	33300.00)	GC
[illegible]	5541.50586c	(70072616)	AT (	65400.00,	33550.00)	GC	44.	4832.48047	(70061016)	AT (	65550.00,	33700.00)	GC
20.	5357.19873c	(70041516)	AT (	64950.00,	33600.00)	GC	45.	4820.16455	(70071916)	AT (	65750.00,	33400.00)	GC
21.	5336.55811c	(70041516)	AT (	65100.00,	33500.00)	GC	46.	4815.60303c	(70072616)	AT (	65450.00,	33650.00)	GC
22.	5321.29590c	(70073016)	AT (	65650.00,	33450.00)	GC	47.	4812.76709	(70061016)	AT (	65600.00,	33700.00)	GC
23.	5295.89111c	(70041516)	AT (	65100.00,	33350.00)	GC	48.	4793.43701c	(70041516)	AT (	64900.00,	33650.00)	GC
24.	5286.05713c	(70041516)	AT (	65150.00,	33350.00)	GC	49.	4774.91455c	(70041516)	AT (	64900.00,	33500.00)	GC
25.	5270.24658c	(70041516)	AT (	64900.00,	33550.00)	GC	50.	4772.27832c	(70073016)	AT (	65700.00,	33450.00)	GC

*** RECEPTOR TYPES: GC = GRIDCART
GP = GRIDPOLR
DC = DISCCART
DP = DISCPOLR
BD = BOUNDARY

*** MODELING OPTIONS USED: CONC RURAL FLAT DFAULT

*** THE SUMMARY OF HIGHEST 1-HR RESULTS ***

** CONC OF OTHER IN (MICROGRAMS/CUBIC-METER) **

GROUP ID		AVERAGE CONC	DATE (YYMMDDHH)	RECEPTOR (XR, YR, ZELEV, ZFLAG)				OF TYPE	NETWORK GRID-ID
ALL	HIGH 1ST HIGH VALUE IS	18936.83590	ON 70030711: AT (	64600.00,	33250.00,	0.00,	0.00)	GC	CAR
	HIGH 2ND HIGH VALUE IS	14946.49410	ON 70082611: AT (	65400.00,	33550.00,	0.00,	0.00)	GC	CAR

*** RECEPTOR TYPES: GC = GRIDCART
GP = GRIDPOLR
DC = DISCCART
DP = DISCPOLR
BD = BOUNDARY

*** MODELING OPTIONS USED: CONC RURAL FLAT DFAULT

*** THE SUMMARY OF HIGHEST 8-HR RESULTS ***

** CONC OF OTHER IN (MICROGRAMS/CUBIC-METER) **

GROUP ID		AVERAGE CONC	DATE (YYMMDDHH)	RECEPTOR (XR, YR, ZELEV, ZFLAG)				OF TYPE	NETWORK GRID-ID
ALL	HIGH 1ST HIGH VALUE IS	6698.43262c	ON 70041516: AT (	65050.00,	33450.00,	0.00,	0.00)	GC	CAR
	HIGH 2ND HIGH VALUE IS	4556.86865c	ON 70073016: AT (	65700.00,	33550.00,	0.00,	0.00)	GC	CAR

*** RECEPTOR TYPES: GC = GRIDCART
GP = GRIDPOLR
DC = DISCCART
DP = DISCPOLR
BD = BOUNDARY

*** MODELING OPTIONS USED: CONC RURAL FLAT DFAULT

*** Message Summary For ISC2 Model Execution ***

--------- Summary of Total Messages --------

A Total of 0 Fatal Error Message(s)
A Total of 0 Warning Message(s)
A Total of 2063 Informational Message(s)

A Total of 2063 Calm Hours Identified

******** FATAL ERROR MESSAGES ********
*** NONE ***

******** WARNING MESSAGES ********
*** NONE ***

****
*** ISCST2 Finishes Successfully ***
****

KERR-McGEE CHEMICAL CORPORATION
KERR-McGEE CENTER • OKLAHOMA CITY, OKLAHOMA 73125

November 1, 1996

RECEIVED
NOV 7 1996
DEQ-OPC

Mr. Bobby Hall
Mississippi Department of Environmental Quality
Air Permitting Branch
Office of Air Pollution Control
P.O. Box 10385
Jackson, MS 39289-0385

RE: Title V Permit Application, Additional Information Number 5
Kerr-McGee Chemical Corporation, Columbus, Mississippi

Dear Mr. Hall:

As a follow-up to your questions regarding particulate matter (PM) emissions, Kerr-McGee Chemical Corporation (KMCC) has prepared additional information in response to your questions. PM emissions from the Framing Mill, Switch Tie Mill, and Cross Tie (sorter) Mill have been reviewed.

KMCC has revised our previous definition of point and fugitive sources to more closely conform with regulatory definitions. As a result, total facility PM emissions have been reduced since saw dust collected within the collection bin is no longer considered emitted to the atmosphere. All calculations previously submitted for the Framing Mill, Switch Tie Mill, and Cross Tie (sorter) Mill have not changed.

In addition, I have revised summary tables E-3 and E-4 to reflect the redefinition of point sources. I believe these changes will provide you with the information to complete your review of our Synthetic Minor Permit Application. I would like to thank you for your complete and comprehensive review of our application.

Should you have any additional requests for information or corrections, please telephone me at (405) 270-2394.

Sincerely,

KERR-McGEE CHEMICAL CORPORATION
FOREST PRODUCTS DIVISION

Nicholas E. Bock
Manager - Environmental Affairs and Regulatory Compliance

Attachment

cc: C. Swann, Facility
S. McCormick, AquAeTer
S. Ladner

Revision: 2
Date: November 1, 1996

TABLE E-3. COLUMBUS POINT SOURCE EMISSIONS SUMMARY - OPERATIONS AS OF OCTOBER 31, 1996

POINT SOURCE	NUMBER	EU __	EP __	CU __	CRITERIA POLLUTANTS (tons/yr)						HAPs (tons/yr)	
					PM	PM-10	CO	SOx	NOx	VOCs	MAX	COMB
Process												
Primary Boiler	1	012	005	-	0.5	0.5	5.21	7.84	20.85	0.420	-	-
Stand-By Boiler	1	013	005	-	0.16	0.16	2.19	0.04	8.77	0.180	-	-
Retort and Corr. Vacuum System	3	001 - 003	001	001	-	-	-	-	-	2.000	0.060	0.078
Retort Doors	3	001A - 003A	001A	-	-	-	-	-	-	2.430	0.074	0.095
Cyclones:												
Framing Mill	1	023	002	002A/B	3.20	1.60 ~~0.00~~	-	-	-	-	-	-
Switch Tie Unloader	1	024	003	003	0.93	0.47	-	-	-	-	-	-
Cross Tie Unloader	1	025	004	004	1.67	.84 ~~0.41~~	-	-	-	-	-	-
Pre-Plating	-	-	-	-	-	-	-	-	-	-	-	-
End Plating	-	-	-	-	-	-	-	-	-	-	-	-
German Stacker	-	-	-	-	-	-	-	-	-	-	-	-
Tram Loading	-	-	-	-	-	-	-	-	-	-	-	-
WTTF												
Primary Oil/Water Separators	2	014 - 015	001	001	-	-	-	-	-	0.001	0.000	0.001
Secondary Oil/Water Separator	1	016	013	005	-	-	-	-	-	0.004	0.002	0.002
Groundwater Oil/Water Separator	1	021	013	005	-	-	-	-	-	0.002	0.001	0.001
Surge Tank	1	017	013	005	-	-	-	-	-	0.001	0.001	0.001
Aeration Basins	3	018 - 020	011	-	-	-	-	-	-	0.565	0.237	0.307
Tank Farm												
Work Tank 4												
Breathing Loss	1	004	001	001	-	-	-	-	-	0.002	0.001	0.001
Working Loss	1	004	001	001	-	-	-	-	-	0.006	0.003	0.003
Reuping Loss	1	004	001	001	-	-	-	-	-	0.055	0.023	0.030
Work Tank 3												
Breathing Loss	1	005	001	001	-	-	-	-	-	0.002	0.001	0.001
Working Loss	1	005	001	001	-	-	-	-	-	0.008	0.004	0.005
Reuping Loss	1	005	001	001	-	-	-	-	-	0.076	0.032	0.041
Work Tank 2												
Breathing Loss	1	006	001	001	-	-	-	-	-	0.002	0.001	0.001
Working Loss	1	006	001	001	-	-	-	-	-	0.006	0.003	0.003
Reuping Loss	1	006	001	001	-	-	-	-	-	0.055	0.023	0.030
Work Tank 1												
Breathing Loss	1	007	001	001	-	-	-	-	-	0.002	0.001	0.001
Working Loss	1	007	001	001	-	-	-	-	-	0.006	0.003	0.003
Reuping Loss	1	007	001	001	-	-	-	-	-	0.055	0.023	0.030
Hot Tank	1	008	001	001	-	-	-	-	-	3.045	1.279	1.652
Sap and Vacuum Seal Water Tank	1	009	006	-	-	-	-	-	-	0.034	0.045	0.082
Reclaim Tank:												
Breathing Loss	1	022	001	001	-	-	-	-	-	0.001	0.000	0.000
Working Loss	1	022	001	001	-	-	-	-	-	0.002	0.001	0.001
Building ("Hot") Sump	1	026	001	001	-	-	-	-	-	0.000	0.000	0.000
SUBTOTAL					6.46	1.54	7.40	7.88	29.62	8.96	1.81	2.37

Other:

1. Emissions reported in this table reflect emissions calculated for the Application Addendum for a Synthetic Minor Operating Permit affixed to the front of the Application for Title V Air Pollution Control Permit to Operate Air Emission Equipment and dated March 1995.
2. The Building ("Hot") Sump now appears on Table E-3, Columbus Point Source Emissions Summary .

Revision: 2
Date: November 1, 1996

TABLE E-4. COLUMBUS FUGITIVE SOURCE EMISSIONS SUMMARY - OPERATIONS OF OCTOBER 31, 1996

FUGITIVE SOURCE	NUMBER	EU __	EP __	CRITERIA POLLUTANTS (tons/yr)						HAPs (tons/yr)	
				PM	PM-10	CO	SOx	NOx	VOCs	MAX	COMB
Heavy Liquid Valves	121	NA	NA	-	-	-	-	-	0.03	0.01	0.02
Pressure Vent Relief Valves	3	NA	NA	-	-	-	-	-	0.30	0.13	0.16
Flanges	88	NA	NA	-	-	-	-	-	0.07	0.03	0.04
Heavy Liquid Pump Seals	20	NA	NA	-	-	-	-	-	0.41	0.17	0.22
Roads	NA	NA	NA	-	5.90	-	-	-	-	-	-
Drip Pad	1	NA	NA	-	-	-	-	-	0.08	0.03	0.04
Tank Farm Containment	1	NA	NA	-	-	-	-	-	0.04	0.02	0.02
Black Tie Storage	NA	NA	NA	-	-	-	-	-	5.45	2.29	3.00
Sumps	11	NA	NA	-	-	-	-	-	0.34	0.14	0.18
Woodwaste		NA	NA	1.26	0.64	-	-	-	-	-	-
SUBTOTAL				NA (a)	NA	NA	NA	NA	NA	2.83	3.69

POINT AND APPLICABLE FUGITIVE SOURCES (b)	CRITERIA POLLUTANTS (c) (tons/yr)						HAPs (tons/yr)	
	PM	PM-10	CO	SOx	NOx	VOCs	MAX	COMB
TOTAL	6.46	1.54	7.40	7.88	29.62	8.96	4.64	6.06

Notes:

(a) Not Applicable, as fugitive criteria pollutants are not counted toward major source determination.

(b) Refer to Table E-3 for Point Source emissions totals.

(c) Fugitive criteria pollutants are not counted toward the determination of major source as per USEPA memorandum from Lydia Wegman, deputy director of the Office of Air Quality Planning and Standards, March and legal citation Clean Air Act Implementation Projects vs. USEPA, CADC No. 92-1303.

Other:

1. Emissions reported in this table reflect emissions calculated for the Application Addendum for a Synthetic Minor Operating Permit affixed to the front of the Application for Title V Air Pollution Control Permit to Air Emission Equipment and dated March 1995.
2. The Building ("Hot") Sump now appears on Table E-3, Columbus Point Source Emissions Summary .

optimizing environmental resources ♦ water, air, earth **AquAeTer**

RECEIVED NOV - 7 1996 DEQ-OPC

MEMORANDUM

TO: Nick Bock, Kerr-McGee Chemical Corporation, Forest Products Division
FROM: Shaleen T. McCormick, **AquAeTer, Inc.**
DATE: October 29, 1996
JOB NO: 960471B/1
RE: Air Emissions from Milling Operations

Point source air emissions of particulate matter (PM) and PM_{10} (PM less than 10 microns in size) from the milling operations at the Columbus facility of Kerr-McGee Chemical Corporation, Forest Products Division (KMCC) were overestimated. A point source of air emissions is defined as any stationary location or fixed facility from which air emissions are discharged or emitted. This definition includes any single identifiable source of air emissions, for example, a pipe, duct, or stack. Air emissions from the mills at the facility were labeled as either point or fugitive. Based upon our conversation of October 28, 1996 some of these designations will change. Specific discussion of air emissions from each mill follows.

FRAMING MILL

Air emissions of PM and PM_{10} at the Framing Mill are discharged through three sources: 1) the building enclosing the Framing Mill; 2) the cyclone; and 3) the collection bin. Collectively these sources form the Framing Mill emission unit (EU023, EP002). The calculations submitted September 30, 1996 in support of estimates of PM and PM_{10} air emissions are summarized in Table 1.

EMISSION SOURCE	POINT		FUGITIVE	
	PM	PM_{10}	PM	PM_{10}
Building	0.02	0.01	0.00	0.00
Cyclone	2.92	1.46	0.00	0.00
Bin	0.26	0.13	0.00	0.00
TOTAL	3.20	1.60	0.00	0.00

TABLE 1. SUMMARY OF AIR EMISSIONS FROM THE FRAMING MILL

The volumes of PM (29.2 tons per year) and PM_{10} (14.6 tons per year) controlled by the cyclone and transferred to the collection bin were initially labeled as point source emissions.

However, these air emissions are not discharged to the atmosphere, but rather are collected in a bin. Therefore, these volumes of PM and PM_{10} do not constitute air emissions.

SWITCH TIE MILL

Air emissions of PM and PM_{10} at the Switch Tie Mill are discharged through three sources: 1) the saw; 2) the cyclone; and 3) the collection bin. Collectively these sources form the Switch Tie Mill emission unit (EU024, EP003). The calculations submitted as part of the Application Addendum for a Synthetic Minor Operating Permit in support of estimates of PM and PM_{10} air emissions are summarized in Table 2.

EMISSION SOURCE	POINT		FUGITIVE	
	PM	PM_{10}	PM	PM_{10}
Saw	0.00	0.00	0.45	0.23
Cyclone	0.85	0.43	0.00	0.00
Bin	0.08	0.04	0.00	0.00
TOTAL	0.93	0.47	0.45	0.23

TABLE 2. SUMMARY OF AIR EMISSIONS FROM THE SWITCH TIE MILL

The volumes of PM (7.65 tons per year) and PM_{10} (3.83 tons per year) controlled by the cyclone and transferred to the collection bin were initially labelled as point source emissions. However, these air emissions are not discharged to the atmosphere, but rather are collected in a bin. Therefore, these volumes of PM and PM_{10} do not constitute air emissions.

CROSS TIE MILL

Air emissions of PM and PM_{10} at the Cross Tie Mill are discharged through three sources: 1) the saw; 2) the cyclone; and 3) the collection bin. Collectively these sources form the Cross Tie Mill emission unit (EU025, EP004). The calculations submitted as part of the Application Addendum for a Synthetic Minor Operating Permit in support of estimates of PM and PM_{10} air emissions are summarized in Table 3.

EMISSION SOURCE	POINT		FUGITIVE	
	PM	PM_{10}	PM	PM_{10}
Saw	0.00	0.00	0.81	0.41
Cyclone	1.53	0.77	0.00	0.00
Bin	0.14	0.07	0.00	0.00
TOTAL	1.67	0.84	0.81	0.41

TABLE 3. SUMMARY OF AIR EMISSIONS FROM THE CROSS TIE MILL

The volumes of PM (13.77 tons per year) and PM_{10} (6.89 tons per year) controlled by the cyclone and transferred to the collection bin were initially labeled as point source emissions. However, these air emissions are not discharged to the atmosphere, but rather are collected in a bin. Therefore, these volumes of PM and PM_{10} do not constitute air emissions.

JOB 960471

SHEET NO. 1 OF 2

CALCULATED BY STM DATE 10-29-96

CHECKED BY _____ DATE _____

SCALE _____

AquAeTer
215 Jamestown Park, Suite 204
Brentwood, TN 37027
(615) 373-8532 FAX (615) 373-8512

KMCC - COLUMBUS
PM EMISSIONS

FRAMING MILL

From the spreadsheet dated September 30, 1996:

BIN

PM $\frac{3.37 \text{ lbs}}{\text{bin}} * \frac{156 \text{ bins}}{\text{yr}} * \frac{1 \text{ ton}}{2{,}000 \text{ lbs}} = 0.26 \text{ tons/yr}$

PM 10 $\frac{1.68 \text{ lbs}}{\text{bin}} * \frac{156 \text{ bins}}{\text{yr}} * \frac{1 \text{ ton}}{2{,}000 \text{ lbs}} = 0.13 \text{ tons/yr}$

CYCLONE

PM $\frac{37.42 \text{ lbs}}{\text{bin}} * \frac{156 \text{ bins}}{\text{yr}} * \frac{1 \text{ ton}}{2{,}000 \text{ lbs}} = 2.92 \text{ tons/yr}$

PM10 $\frac{18.71 \text{ lbs}}{\text{bin}} * \frac{156 \text{ bins}}{\text{yr}} * \frac{1 \text{ ton}}{2{,}000 \text{ lbs}} = 1.46 \text{ tons/yr}$

BUILDING

PM $\frac{0.20 \text{ lbs}}{\text{bin}} * \frac{156 \text{ bins}}{\text{yr}} * \frac{1 \text{ ton}}{2{,}000 \text{ lbs}} = 0.02 \text{ tons/yr}$

PM10 $\frac{0.10 \text{ lbs}}{\text{bin}} * \frac{156 \text{ bins}}{\text{yr}} * \frac{1 \text{ ton}}{2{,}000 \text{ lbs}} = 0.01 \text{ tons/yr}$

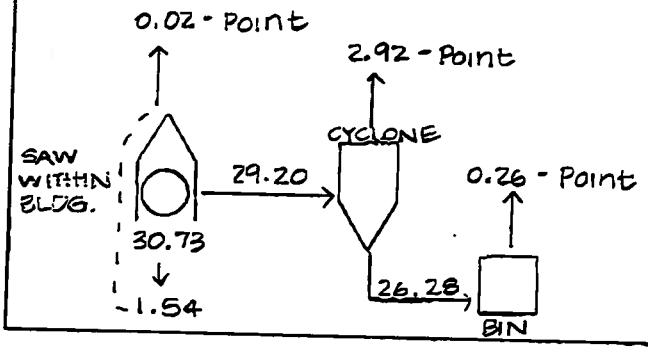

TOTAL PM = 3.20 tons/yr
TOTAL PM10 = 1.60 tons/yr

Air emissions are in terms of tons per year PM. PM-10 air emissions are assumed to be 50 percent of PM air emissions.

JOB 960471

SHEET NO. 2 OF 2

CALCULATED BY STM DATE 10-29-96

CHECKED BY _____ DATE _____

SCALE _____

AquAeTer
215 Jamestown Park, Suite 204
Brentwood, TN 37027
(615) 373-8532 FAX (615) 373-8512

KMCC - COLUMBUS
PM EMISSIONS

SWITCH TIE MILL

From the spreadsheet submitted as part of the Application Addendum for a Synthetic Minor Operating Permit:

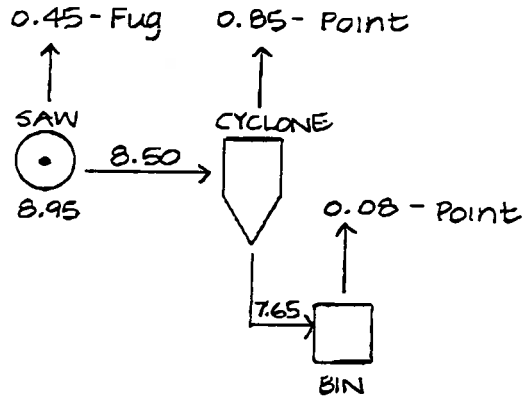

Air emissions are in terms of tons per year PM. PM-10 air emissions are assumed to be 50 percent of PM air emissions.

CROSS TIE MILL

From the spreadsheet submitted as part of the Application Addendum for a Synthetic Minor operating Permit:

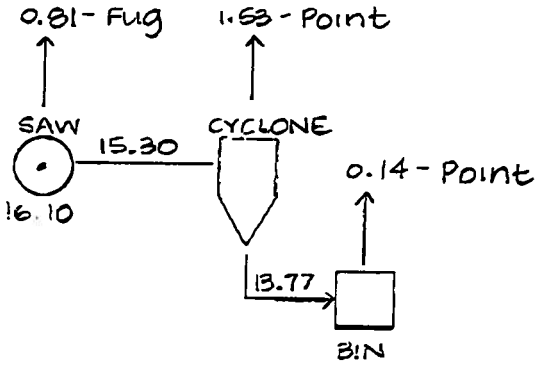

Air emissions are in terms of tons per year PM. PM-10 air emissions are assumed to be 50 percent of PM air emissions.

KERR-McGEE CHEMICAL CORPORATION
KERR-McGEE CENTER • OKLAHOMA CITY, OKLAHOMA 73125

RECEIVED
OCT 21 1996
Dept. of Environmental Quality
Office of Pollution Control

October 16, 1996

Mr. Bobby Hall
Mississippi Department of Environmental Quality
Air Permitting Branch
Office of Air Pollution Control
P.O. Box 10385
Jackson, MS 39289-0385

RE: Title V Permit Application, Additional Information Number 4
Kerr-McGee Chemical Corporation, Columbus, Mississippi

Dear Mr. Hall:

Per your request, Kerr-McGee Chemical Corporation (KMCC) is submitting another correction to the "Fuel Burning Equipment (page 2of 2)" table, Section D.

Should you have any additional requests for information or corrections, please telephone me at (405) 270-2394.

Sincerely,

Kerr-McGee CHEMICAL CORPORATION
FOREST PRODUCTS DIVISION

Nicholas E. Bock
Manager - Environmental Affairs and Regulatory Compliance

Attachment

cc: C. Swann, Facility
S. McCormick, AquAeTer
S. Ladner

Forest Products

FUEL BURNING EQUIPMENT (page 2 of 2)

SECTION D

12. POLLUTANT EMISSIONS:
Emission rate calculations, monitoring data, or stack test data must be attached!

EMISSION POINT NO.	POLLUTANT (note 1)	CONTROL EQUIPMENT		ACTUAL EMISSION RATE			PROPOSED ALLOWABLE EMISSION RATE		
		yes/no*	effic.	note 2	lb/hr	tn/yr (a)	note 2	lb/hr	tn/yr
EP005	SO_x	NO	N/A	lb/MMBTU	0.02	0.01	lb/MMBTU	7.1 (b)	7.84(b)
EP005	NO_x	NO	N/A	lb/MMBTU	4.76	20.85	lb/MMBTU	4.76 (a)	20.85(a)
EP005	CO	NO	N/A	lb/MMBTU	1.20	0.43	lb/MMBTU	1.20 (a)	5.21(a)
EP005	PM	NO	N/A	lb/MMBTU	0.09	0.37	lb/MMBTU	0.2 (b)	0.50(b)
EP005	PM-10	NO	N/A	lb/MMBTU	0.09	0.37	lb/MMBTU	0.2 (b)	0.50(b)
EP005	VOCs	NO	N/A	lb/MMBTU	0.10	0.042	lb/MMBTU	0.1 (a)	0.42(a)

1. All regulated air pollutants including hazardous air pollutants emitted from this source should be listed. A list of regulated air pollutants has been provided in Section A.
2. Provide emission rate in units of applicable emission standard, e.g. lb/MMbtu, gr/dscf, etc. This may not apply to every emission point or every pollutant from an emission point.

* If yes, attach appropriate Air Pollution Control Data Sheet from Section L or manufacturers specifications if other.

NOTE: The maximum or proposed allowable emission rate is calculated as 3 months operation with No. 2 Fuel Oil and 9 months operation with Natural Gas. Natural Gas is typically burned continuously except during times of curtailment when No. 2 Fuel Oil is substituted. If possible, the source would burn only Natural Gas. Particulate matter (PM, PM-10) and sulfur dioxide (SO_2) are emitted at a greater rate with the burning of No. 2 Fuel Oil. The maximum anticipated Natural Gas curtailment has been estimated at 3 months. Therefore, in order to determine a maximum potential to emit, 3 months of oil plus 9 months of Natural Gas use were calculated for these emission rates. The other criteria pollutants, nitrous oxide (NOx), carbon monoxide (CO), and volatile organic compounds (VOC), are emitted at a greater rate with the burning of Natural Gas. These emissions were therefore calculated as 12 months of Natural Gas use. It is requested that this operating scenario be adopted into the federally-enforceable state operating permit.

(a) These emission rates are based on 12 months operation w/Natural Gas or the maximum emission rates.
(b) These emission rates are based on 3 months operation w/No. 2 Fuel Oil and 9 months operation w/Natural Gas.

RECEIVED
OCT 18 1996
DEQ-OPC

KERR-McGEE CHEMICAL CORPORATION
KERR-McGEE CENTER • OKLAHOMA CITY, OKLAHOMA 73125

October 11, 1996

RECEIVED
OCT 16 1996
Dept. of Environmental Quality
Office of Pollution Control

Mr. Bobby Hall
Mississippi Department of Environmental Quality
Air Permitting Branch
Office of Air Pollution Control
P.O. Box 10385
Jackson, MS 39289-0385

RE: Title V Permit Application, Additional Information Number 3
Kerr-McGee Chemical Corporation, Columbus, Mississippi

Dear Mr. Hall:

As a follow-up to our meeting in Columbus, MS on October 7, 1996, Kerr-McGee Chemical Corporation (KMCC) is submitting corrections to the "Fuel Burning Equipment (page 2of 2)" table, Section D, per your request. Values in pounds per hour for sulfur and particulate criteria pollutants in this table were previously based on Air Operating Permit 1680-00020. Changes to this table for sulfur and particulate criteria pollutants are now based on operation of the boiler with No. 2 fuel oil for three months and with natural gas for nine months per year.

KMCC greatly appreciates you taking the time to visit our facility. We believe we have a much clearer understanding of the permitting process and as a result of your visit many of our misconceptions have been eliminated.

In the interim, should you have questions, please telephone me at (405) 270-2394.

Sincerely,

Kerr-McGee CHEMICAL CORPORATION
FOREST PRODUCTS DIVISION

Nicholas E. Bock
Manager - Environmental Affairs and Regulatory Compliance

Attachment

cc: C. Swann, Facility
S. McCormick, AquAeTer
S. Ladner

FUEL BURNING EQUIPMENT (page 2 of 2)

SECTION D

12. POLLUTANT EMISSIONS:
Emission rate calculations, monitoring data, or stack test data must be attached!

EMISSION POINT NO.	POLLUTANT (note 1)	CONTROL EQUIPMENT		ACTUAL EMISSION RATE			PROPOSED ALLOWABLE EMISSION RATE		
		yes/no*	effic.	note 2	lb/hr	tn/yr (a)	note 2	lb/hr	tn/yr
EP005	SO_x	NO	N/A	lb/MMBTU	0.02	0.01	lb/MMBTU	7.2(b)	7.84(b)
EP005	NO_x	NO	N/A	lb/MMBTU	4.76	20.85	lb/MMBTU	4.76 (a)	20.85(a)
EP005	CO	NO	N/A	lb/MMBTU	1.20	0.43	lb/MMBTU	1.20 (a)	5.21(a)
EP005	PM	NO	N/A	lb/MMBTU	0.09	0.37	lb/MMBTU	0.2(b)	0.50(b)
EP005	PM-10	NO	N/A	lb/MMBTU	0.09	0.37	lb/MMBTU	0.2(b)	0.50(b)
EP005	VOCs	NO	N/A	lb/MMBTU	0.10	0.042	lb/MMBTU	0.1 (a)	0.42(a)

1. All regulated air pollutants including hazardous air pollutants emitted from this source should be listed. A list of regulated air pollutants has been provided in Section A.
2. Provide emission rate in units of applicable emission standard, e.g. lb/MMbtu, gr/dscf, etc. This may not apply to every emission point or every pollutant from an emission point.

* If yes, attach appropriate Air Pollution Control Data Sheet from Section L or manufacturers specifications if other.

NOTE: The maximum or proposed allowable emission rate is calculated as 3 months operation with No. 2 Fuel Oil and 9 months operation with Natural Gas. Natural Gas is typically burned continuously except during times of curtailment when No. 2 Fuel Oil is substituted. If possible, the source would burn only Natural Gas. Particulate matter (PM, PM-10) and sulfur dioxide (SO_2) are emitted at a greater rate with the burning of No. 2 Fuel Oil. The maximum anticipated Natural Gas curtailment has been estimated at 3 months. Therefore, in order to determine a maximum potential to emit, 3 months of oil plus 9 months of Natural Gas use were calculated for these emission rates. The other criteria pollutants, nitrous oxide (NOx), carbon monoxide (CO), and volatile organic compounds (VOC), are emitted at a greater rate with the burning of Natural Gas. These emissions were therefore calculated as 12 months of Natural Gas use. It is requested that this operating scenario be adopted into the federally-enforceable state operating permit.

(a) These emission rates are based on 12 months operation w/Natural Gas or the maximum emission rates.
(b) These emission rates are based on 3 months operation w/No. 2 Fuel Oil and 9 months operation w/Natural Gas.

RECEIVED
OCT 16 1996
DEQ-OPC

RECEIVED
OCT - 7 1996

AquAeTer *optimizing environmental resources - water, air, earth*

AquAeTer, Inc.
TRANSMITTAL COVER PAGE

DATE: Sept. 30, 1996
JOB NUMBER: 960471
NO. OF PAGES: 9
(Includes Cover Page)

TRANSMIT TO:

COMPANY NAME	CONTACT NAME	FAX NUMBER
KERR MCGEE	NICK BOCK	(405) 270 2420
OK CITY		

TRANSMITTAL FROM: S. MCCORMICK

COMMENTS:

Please find attached revised pages for the Columbus air operating permit application.
Work tank forms to follow via E-mail.

215 Jamestown Park, Suite 204
Brentwood, Tennessee 37027

Phone: (615) 373-8532
FAX: (615) 373-8512

Revision: 1
Date: September 30, 1996

EXECUTIVE SUMMARY

Kerr-McGee Chemical Corporation (KMCC), Forest Products Division (FPD) operates a wood-treating facility for producing creosote-treated wood products, including railroad crossties, bridge pieces, and crossing pieces at a facility located in Columbus, Mississippi. Major operations at the plant site are summarized in Table E-1. The facility is requesting a Synthetic Minor Operating Permit for operations of the following processes:

1) sawmill activities, which emit particulate matter (PM and PM_{10});

2) boilers, which emit sulfur dioxides (SO_x), nitrous oxides (NO_x), carbon monoxide (CO), volatile organic carbons (VOCs), and PM and PM_{10} (PM of 10 microns or less);

3) wood-treating, which emits VOCs and hazardous air pollutants (HAPs);

4) a tank farm, which emits VOCs and HAPs;

5) a wastewater treatment system, which emits VOCs and HAPs;

6) fugitive emissions, which come from all the above processes plus roadway dust and the black-tie treated-wood storage yard; and

7) insignificant sources, which include any other potential air emission sources onsite.

KMCC currently operates sawmill operations and the boilers under Mississippi Department of Environmental Quality (MDEQ) Air Operating Permit No. 1680-00020. KMCC currently operates cyclones that control PM emissions from the three onsite sawmills, and they use low sulfur fuel for control of emissions from the onsite boilers. The wastewater treatment system tankage is covered to control emissions and any emissions will be sent through a scrubber. Previously, a new work tank and a scrubber were installed that met the new source performance standards (NSPS) specification for air emission controls of 95 percent efficiency. The tank was permitted as a new source. Creosote work tanks do not have to meet new source performance standards (NSPS) because this chemical falls below the vapor pressures specified. KMCC has installed a scrubber through which most air streams containing VOCs and HAPs vent prior to discharge to the atmosphere. The new scrubber and the scrubber on the wastewater treatment facility will meet an efficiency of 75 percent.

Emission factors have been developed for the KMCC operations across the country based on data collected from seven KMCC facilities, other creosote treaters where the data have been accepted by the U.S. EPA, published emission factors, such as, AP-42 and Synthetic Organic Chemicals Manufacturing Industry (SOCMI) factors, and manufacturers specifications. These emission factors are summarized in Table E-2. Using these emission factors, air emissions from the facility are summarized in Tables E-3 and E-4. Based on the air emission inventory and the factors developed for the KMCC facilities and the Columbus facility, specifically, KMCC is requesting a Synthetic Minor Operating Permit.

Revision: 1
Date: September 30, 1996

TABLE E-3. COLUMBUS POINT SOURCE EMISSIONS SUMMARY - OPERATIONS AS OF OCTOBER 31, 1996

POINT SOURCE	NUMBER	EU__	EP__	CU__	CRITERIA POLLUTANTS (tons/yr) PM	PM-10	CO	SO_2	NO_x	VOC_s	HAPs (tons/yr) MAX	COMB
Process												
Primary Boiler	1	012	005	-	0.5	0.5	5.21	7.84	20.85	0.420	-	-
Stand-By Boiler	1	013	005	-	0.16	0.16	2.19	0.04	8.77	0.180	-	-
Retort and Conv. Vacuum System	3	001 - 003	001	001	-	-	-	-	-	2.000	0.060	0.078
Retort Doors	3	001A - 003A	001A	-	-	-	-	-	-	2.430	0.074	0.095
Cyclones:												
Framing Mill	1	023	002	002A/B	29.20	14.59	-	-	-	-	-	-
Switch Tie Unloader	1	024	003	003	7.65	3.83	-	-	-	-	-	-
Cross Tie Unloader	1	025	004	004	13.77	6.89	-	-	-	-	-	-
Pre-Plating	-	-	-	-	-	-	-	-	-	-	-	-
End Plating	-	-	-	-	-	-	-	-	-	-	-	-
German Stacker	-	-	-	-	-	-	-	-	-	-	-	-
Fram Loading	-	-	-	-	-	-	-	-	-	-	-	-
WTTF												
Primary Oil/Water Separators	2	014 - 015	001	001	-	-	-	-	-	0.001	0.000	0.001
Secondary Oil/Water Separator	1	016	013	005	-	-	-	-	-	0.004	0.002	0.002
Groundwater Oil/Water Separator	1	021	013	005	-	-	-	-	-	0.002	0.001	0.001
Surge Tank	1	017	013	005	-	-	-	-	-	0.001	0.001	0.001
Aeration Basins	3	018 - 020	011	-	-	-	-	-	-	0.565	0.237	0.307
Tank Farm												
Work Tank 4												
Breathing Loss	1	004	001	001	-	-	-	-	-	0.002	0.001	0.001
Working Loss	1	004	001	001	-	-	-	-	-	0.006	0.003	0.003
Reuping Loss	1	004	001	001	-	-	-	-	-	0.055	0.023	0.030
Work Tank 3												
Breathing Loss	1	005	001	001	-	-	-	-	-	0.002	0.001	0.001
Working Loss	1	005	001	001	-	-	-	-	-	0.008	0.004	0.005
Reuping Loss	1	005	001	001	-	-	-	-	-	0.076	0.032	0.041
Work Tank 2												
Breathing Loss	1	006	001	001	-	-	-	-	-	0.002	0.001	0.001
Working Loss	1	006	001	001	-	-	-	-	-	0.006	0.003	0.003
Reuping Loss	1	006	001	001	-	-	-	-	-	0.055	0.023	0.030
Work Tank 1												
Breathing Loss	1	007	001	001	-	-	-	-	-	0.002	0.001	0.001
Working Loss	1	007	001	001	-	-	-	-	-	0.006	0.003	0.003
Reuping Loss	1	007	001	001	-	-	-	-	-	0.055	0.023	0.030
Hot Tank	1	008	001	001	-	-	-	-	-	3.045	1.279	1.632
Sap and Vacuum Seal Water Tank	1	009	006	-	-	-	-	-	-	0.034	0.045	0.082
Reclaim Tank:												
Breathing Loss	1	022	001	001	-	-	-	-	-	0.001	0.000	0.000
Working Loss	1	022	001	001	-	-	-	-	-	0.002	0.001	0.001
Building ("Hot") Sump	1	026	001	001	-	-	-	-	-	0.000	0.000	0.000
SUBTOTAL					51.28	25.97	7.40	7.88	29.62	8.96	1.81	2.37

Other:

1. Emissions reported in this table reflect emissions calculated for the Application Addendum for a Synthetic Minor Operating Permit affixed to the front of the Application for Title V Air Pollution Control Permit to Operate Air Emission Equipment and dated March 1995.
2. The Building ("Hot") Sump now appears on Table E-3, Columbus Point Source Emissions Summary.

Revision: 1
Date: September 30, 1996

TABLE E-4. COLUMBUS FUGITIVE SOURCE EMISSIONS SUMMARY - OPERATIONS OF OCTOBER 31, 1996

FUGITIVE SOURCE	NUMBER	EU __	EP __	CRITERIA POLLUTANTS (tons/yr)						HAPs (tons/yr)	
				PM	PM-10	CO	SOx	NOx	VOCs	MAX	COMB
Heavy Liquid Valves	121	NA	NA	-	-	-	-	-	0.03	0.01	0.02
Pressure Vent Relief Valves	3	NA	NA	-	-	-	-	-	0.30	0.13	0.16
Flanges	88	NA	NA	-	-	-	-	-	0.07	0.03	0.04
Heavy Liquid Pump Seals	20	NA	NA	-	-	-	-	-	0.41	0.17	0.22
Roads	NA	NA	NA	-	5.90	-	-	-	-	-	-
Drip Pad	1	NA	NA	-	-	-	-	-	0.08	0.03	0.04
Tank Farm Containment	1	NA	NA	-	-	-	-	-	0.04	0.02	0.02
Black Tie Storage	NA	NA	NA	-	-	-	-	-	5.45	2.29	3.00
Sumps	11	NA	NA	-	-	-	-	-	0.34	0.14	0.18
Woodwaste		NA	NA	5.80	2.89	-	-	-	-	-	-
SUBTOTAL				NA (a)	NA	NA	NA	NA	NA	2.83	3.69

POINT AND APPLICABLE FUGITIVE SOURCES (b)	CRITERIA POLLUTANTS (c) (tons/yr)						HAPs (tons/yr)	
	PM	PM-10	CO	SOx	NOx	VOCs	MAX	COMB
TOTAL	51.28	25.97	7.40	7.88	29.62	8.96	4.64	6.06

Notes:

(a) Not Applicable, as fugitive criteria pollutants are not counted toward major source determination.

(b) Refer to Table E-3 for Point Source emissions totals.

(c) Fugitive criteria pollutants are not counted toward the determination of major source as per USEPA memorandum from Lydia Wegman, deputy director of the Office of Air Quality Planning and Standards, March 8, 1994 and legal citation Clean Air Act Implementation Projects vs. USEPA, CADC No. 92-1303.

Other:

1. Emissions reported in this table reflect emissions calculated for the Application Addendum for a Synthetic Minor Operating Permit affixed to the front of the Application for Title V Air Pollution Control Permit to Operate Air Emission Equipment and dated March 1995.
2. The Building ("Hot") Sump now appears on Table E-3, Columbus Point Source Emissions Summary .

Revision: 1
Date: September 30, 1996

Synthetic Minor Operating Scenario Emission Summary

Emission Point **EP001 Treating System Scrubber** 75% eff

Emission Unit	UTM Coordinates		Uncontrolled Emission Rate (lbs/day)			Uncontrolled Emission Rate (tons/yr)			Controlled Emission Rate (lbs/day)			Controlled Emission Rate (tons/yr)		
	North	East	Naph	HAPs	VOCs	Naph	HAPs	VOCs	Naph	HAPs	VOCs	Naph	HAPs	VOCs
Retort and Corresponding Vacuum System	1397846.59	629267.66	1.317	1.702	43.883	0.240	0.311	8.009	0.329	0.425	10.971	0.060	0.078	2.002
Work Tank 4	1397893.10	629183.30	0.578	0.747	1.376	0.105	0.136	0.251	0.144	0.187	0.344	0.026	0.034	0.063
Work Tank 3	1397882.63	629207.11	0.792	1.023	1.886	0.145	0.187	0.344	0.198	0.256	0.471	0.036	0.047	0.086
Work Tank 2	1397853.69	629168.56	0.578	0.747	1.376	0.105	0.136	0.251	0.144	0.187	0.344	0.026	0.034	0.063
Work Tank 1	1397851.34	629138.43	0.578	0.747	1.376	0.105	0.136	0.251	0.144	0.187	0.344	0.026	0.034	0.063
Hot Tank	1397879.61	629130.39	–	–	–	–	–	–	7.008	9.054	16.685	1.279	1.652	3.045
POWs (2)	1397878.34 1397899.37	629142.68 629148.80	0.204	0.264	0.486	0.037	0.048	0.089	0.002	0.003	0.005	0.000	0.000	0.001
Building Sump	1397846.59	629267.66	0.057	0.073	0.135	0.010	0.013	0.025	0.001	0.001	0.001	0.000	0.000	0.000
Sap and Vacuum Seal Water Tank	1397846.59	629267.66	0.189	0.244	0.450	0.034	0.045	0.082	–	–	–	–	–	–
Reclaim Tank	1397878.34	629142.68	0.019	0.024	0.045	0.003	0.004	0.008	0.005	0.006	0.011	0.001	0.001	0.002

Other:

1. This table appears immediately behind the title page for EP001, Treating System Scrubber and following the various schematics within the Application Addendum for a Synthetic Minor Operating Permit affixed to the front of the Application for Air Pollution Control Permit to Operate Air Emissions Equipment.

Revision: 1
Date: September 30, 1996

Synthetic Minor Operating Scenario Emission Summary

Emission Point **EP013 Wastewater Treatment Facility Scrubber**

Emission Unit	UTM Coordinates		Uncontrolled Emission Rate (lbs/day)			Uncontrolled Emission Rate (tons/yr)			Controlled Emission Rate (lbs/day)			Controlled Emission Rate (tons/yr)		
	North	East	Naph	HAPs	VOCs	Naph	HAPs	VOCs	Naph	HAPs	VOCs	Naph	HAPs	VOCs
Groundwater Oil/Water Separator	1397973.68	629058.79	0.551	0.712	1.311	0.101	0.130	0.239	0.006	0.007	0.013	0.001	0.001	0.002
Secondary Oil/Water Separator	1398024.42	629043.56	0.885	1.144	2.108	0.162	0.209	0.385	0.009	0.011	0.021	0.002	0.002	0.004
SOW Surge Tank	1398010.64	629014.51	0.264	0.341	0.628	0.048	0.062	0.115	0.003	0.003	0.006	0.000	0.001	0.001

Other:

1. This table appears immediately behind the title page for EP013, Wastewater Treatment Facility Scrubber and following the Support Calculations for EP001, Treating System Scrubber within the Application Addendum for a Synthetic Minor Operating Permit affixed to the front of the Application for Air Pollution Control Permit to Operate Air Emissions Equipment.

Revision: 1
Date: September 30, 1996

PLANT: Columbus
PROCESS UNIT: Framing Mill (Crossings, Panels, Bridge)
EMISSION: Actual Particulates: PM, PM-10

Wood Waste Emission Factor

The variety of cuts, all to customer specifications, made at each of the three saw mills, precludes any wood waste estimates based on saw cuts. Therefore, wood waste will be quantified by the number of 40 yard containers filled and removed weekly.

	Width (in)	Depth (in)	Length (ft)
1. Dimensions of tie (W x L x D)	6	8	8.5
2. Weight of tie (lb)	175		
3. Cubic feet of tie (ft3)	2.83		
4. Pound per cubic foot (lb/ft3)	61.76		
5. Weight of cubic foot of sawdust (lb/ft3)	31.185		
6. Weight of cubic yard of sawdust (lb/yd3)	842.00		

Maximum Emissions

		Unit	
Number of units	1		
Maximum number of 40-CuYd bins filled	1.5	bins/week	
	78	bins/yr	
Maximum volume of wood waste produced	2,627,024	lb/yr	= 7197.327 lb/day
	1,313.51	ton/yr	
Maximum pounds of wood waste/container	33,679.80	lbs/bin	= 90% of wood waste Collected By Cyclone
Maximum pounds of PM/container	336.80	lbs/bin	PM is assumed to be 1 percent of wood waste volume
Maximum pounds of PM-10/container	168.40	lbs/bin	PM-10 is assumed to be 50 percent of PM volume
Fugitive PM loss from Container	3.37	lbs/bin	1 percent emission rate from AP-42
Fugitive PM-10 loss from Container	1.68	lbs/bin	1 percent emission rate from AP-42
PM Collected By Cyclone	374.22	lbs/bin	= PM Cyclone Collects per bin
PM-10 Collected By Cyclone	187.11	lbs/bin	
Fugitive PM loss from Cyclone	37.42	lbs/bin	of Fugitive PM from Cyclone per bin
Fugitive PM-10 loss from Cyclone	18.71	lbs/bin	of Fugitive PM-10 from Cyclone per bin
Total PM Generated By Framing Mill Building	393.92	lbs/bin	= Cyclone Collects 95% PM Framing Mill Building
Total PM-10 Generated By Framing Mill Building	196.96	lbs/bin	
PM Uncollected from Building by Cyclone	19.70	lbs/bin	= 5% Building PM Uncollected by Cyclone
PM-10 Uncollected from Building by Cyclone	9.85	lbs/bin	
Building Fugitive PM	0.20	lbs/bin	= Building Controls 99% of 5% Fugitive PM
Building Fugitive PM-10	0.10	lbs/bin	
Total Fugitive PM from Framing Mill	40.99	lbs/bin	
Total Fugitive PM-10 from Framing Mill	20.49	lbs/bin	
Annual Number of Bins	78		
Total Annual Fugitive PM	1.60	ton/yr	
	8.76	lbs/day	
Total Annual Fugitive PM-10	0.80	ton/yr	
	4.38	lbs/day	

Assumptions

1. Pound per cubic foot of tie is based on a 6 x 8 tie at 175 lb.
2. PM is assumed to be 1 percent of woodwaste produced. The original submission included an incorrect value of 10 percent for this relationship. Refer to other cutting operations for confirmation.

References

1. Emission factors for wood waste were found in AP-42 10.4.3

Revision: 1
Date: September 30, 1996

PLANT: Columbus
PROCESS UNIT: Framing Mill (Crossings, Panels, Bridge)
EMISSION: Maximum Particulates: PM, PM-10

Wood Waste Emission Factor

The variety of cuts, all to customer specifications, made at each of the three saw mills, precludes any wood waste estimates based on saw cuts. Therefore, wood waste will be quantified by the number of 40 yard containers filled and removed weekly.

	Width (in)	Depth (in)	Length (ft)
1. Dimensions of tie (W x L x D)	6	8	8.5
2. Weight of tie (lb)	175		
3. Cubic feet of tie (ft3)	2.83		
4. Pound per cubic foot (lb/ft3)	61.76		
5. Weight of cubic foot of sawdust (lb/ft3)	31.185		
6. Weight of cubic yard of sawdust (lb/yd3)	842.00		

Maximum Emissions

		Unit	
Number of units	1		
Maximum number of 40-CuYd bins filled	3.0	bins/week	
	156	bins/yr	
Maximum volume of wood waste produced	5,254,049	lb/yr	= 14394.65 lb/day
	2,627.02	ton/yr	
Maximum pounds of wood waste/container	33,679.80	lbs/bin	= 90% of wood waste Collected By Cyclone
Maximum pounds of PM/container	336.80	lbs/bin	PM is assumed to be 1 percent of wood waste volume
Maximum pounds of PM-10/container	168.40	lbs/bin	PM-10 is assumed to be 50 percent of PM volume
Fugitive PM loss from Container	3.37	lbs/bin	1 percent emission rate from AP-42
Fugitive PM-10 loss from Container	1.68	lbs/bin	1 percent emission rate from AP-42
PM Collected By Cyclone	374.22	lbs/bin	= PM Cyclone Collects per bin
PM-10 Collected By Cyclone	187.11	lbs/bin	
Fugitive PM loss from Cyclone	37.42	lbs/bin	of Fugitive PM from Cyclone per bin
Fugitive PM-10 loss from Cyclone	18.71	lbs/bin	of Fugitive PM-10 from Cyclone per bin
Total PM Generated By Framing Mill Building	393.92	lbs/bin	= Cyclone Collects 95% PM Framing Mill Building
Total PM-10 Generated By Framing Mill Building	196.96	lbs/bin	
PM Uncollected from Building by Cyclone	19.70	lbs/bin	= 5% Building PM Uncollected by Cyclone
PM-10 Uncollected from Building by Cyclone	9.85	lbs/bin	
Building Fugitive PM	0.20	lbs/bin	= Building Controls 99% of 5% Fugitive PM
Building Fugitive PM-10	0.10	lbs/bin	
Total Fugitive PM from Framing Mill	40.99	lbs/bin	
Total Fugitive PM-10 from Framing Mill	20.49	lbs/bin	
Annual Number of Bins	156		
Total Annual Fugitive PM	3.20	ton/yr	
	17.52	lbs/day	
Total Annual Fugitive PM-10	1.60	ton/yr	
	8.76	lbs/day	

Assumptions

1. Pound per cubic foot of tie is based on a 6 x 8 tie at 175 lb.
2. PM is assumed to be 1 percent of woodwaste produced. The original submission included an incorrect value of 10 percent for this relationship. Refer to other cutting operations for confirmation.

References

1. Emission factors for wood waste were found in AP-42 10.4.3

Revision: 1
Date: September 23, 1996

TANK SUMMARY (page 1 of 2) SECTION H

1. Emission Point No./Name: EP001-Work Tank Scrubber: Work Tank No. 4 (EU004)

2. Was this tank constructed or modified after August 7, 1977? X yes ____ no

   If yes please give date and explain. Construction of tank will begin upon receipt of a permit to construct

3. Product Stored: Creosote
   If more than one product is stored, provide the information in 4 A-E for each product.

4. Tank Data:

A.	True Vapor Pressure at storage temperature:	0.068	psia/°F
B.	Reid Vapor Pressure at storage temperature:	NA	psia/°F
C.	Density of product at storage temperature:	9.3	lb/gal
D.	Molecular Weight of product vapor at storage temperature:	128	lb/lbmol
E.	Throughput for most recent calendar year:	1.2 x 10⁷	gal/yr
F.	Tank Capacity:	57,000	gal
G.	Tank Diameter:	18	feet
H.	Tank Height / Length:	30	feet
I.	Average Vapor Space Height:	3	feet
J.	Tank Orientation:	V	Vertical or Horizontal
K.	Type of Roof:	D	Dome or Cone

L. Is the Tank Equipped with a Vapor Recovery System? X Yes ____ No
   If Yes, describe on separate sheet of paper and attach. Indicate efficiency.

M. Check the Type of Tank:
   - X Fixed Roof
   - ____ External Floating Roof
   - ____ Pressure
   - ____ Internal Floating Roof
   - ____ Variable Vapor Space
   - ____ Other, describe:

N. Check the Closest City:
   - X Jackson, Ms.
   - ____ Birmingham, Al.
   - ____ Memphis, Tn.
   - ____ Montgomery, Al.
   - ____ New Orleans, La.
   - ____ Baton Rouge, La.

O. Check the Tank Paint Color:
   - ____ Aluminum Specular
   - ____ Gray Light
   - ____ Aluminum Diffuse
   - ____ Gray Medium
   - ____ Red
   - ____ White
   - X Other, describe: Black

P. Tank Paint Condition: G Good or Poor

Q. Check Type of Tank Loading

1. Trucks and Rail Cars
   - ____ Submerged Loading of clean cargo tank
   - X Submerged Loading : Dedicated Normal Service
   - ____ Submerged Loading : Dedicated Vapor Balance Service
   - ____ Splash Loading of clean cargo tank
   - ____ Splash Loading : Dedicated Normal Service
   - ____ Splash Loading : Dedicated Vapor Balance Service

2. Marine Vessels - NOT APPLICABLE
   - ____ Submerged Loading: Ships
   - ____ Submerged Loading: Barges

TANK SUMMARY (page 2 of 2) SECTION H

R. For External Floating Roof Tanks NOT APPLICABLE

1. Check the Type of Tank Seal:

Mechanical Shoe

_____ Primary Seal Only

_____ With Shoe-Mounted Secondary Seal

_____ With Rim-Mounted Secondary Seal

Liquid Mounted Resilient Seal

_____ Primary Seal Only

_____ With Shoe-Mounted Secondary Seal

_____ With Rim-Mounted Secondary Seal

Vapor Mounted Resilient Seal

_____ Primary Seal Only

_____ With Shoe-Mounted Secondary Seal

_____ With Rim-Mounted Secondary Seal

2. Type of External Floating Roof: _____ Pontoon

_____ Double-Deck

S. For Internal Floating Roof Tanks NOT APPLICABLE

1. Check the Type of Tank Seal:

Liquid Mounted Resilient Seal

_____ Primary Seal Only

_____ With Rim-Mounted Secondary Seal

Vapor Mounted Resilient Seal

_____ Primary Seal Only

_____ With Rim-Mounted Secondary Seal

2. Number of Roof Columns: _____

3. Length of Deck Seam _____ feet:

4. Area of Deck: _____ $feet^2$

5. Effective Column Diameter: _____ feet

6. Check the Type of Tank:

_____ Bolted with Column Supported Roof

_____ Welded with Column Supported Roof

_____ Bolted with Self-Supported Roof

_____ Welded with Self-Supported Roof

5. Emissions Summary

	HAPs	VOCs		HAPs	VOCs	
1. Breathing Loss:	0.004	0.008	lb/day	.0007	.001	TPY
2. Working Loss:	0.033	0.061	lb/day	.006	.011	TPY
3. Rueping Loss:	0.303	0.559	lb/day	.055	.102	TPY
4. Total Emissions:	0.340	0.628	lb/day	.062	.115	TPY

6. UTM Coordinates:

A. Zone 16 East B. North 1397893.10 C. East 629182.30

Revision: 1
Date: September 23, 1996

TANK SUMMARY (page 1 of 2) SECTION H

1. Emission Point No./Name: EP001-Work Tank Scrubber: Work Tank No. 3 (EU005)

2. Was this tank constructed or modified after August 7, 1977? X yes ____ no

   If yes please give date and explain. Construction of tank will begin upon receipt of a permit to construct

3. Product Stored: Creosote
   If more than one product is stored, provide the information in 4 A-E for each product.

4. Tank Data:

A.	True Vapor Pressure at storage temperature:	0.068	psia/°F
B.	Reid Vapor Pressure at storage temperature:	NA	psia/°F
C.	Density of product at storage temperature:	9.3	lb/gal
D.	Molecular Weight of product vapor at storage temperature:	128	lb/lbmol
E.	Throughput for most recent calendar year:	1.6×10^7	gal/yr
F.	Tank Capacity:	78,000	gal
G.	Tank Diameter:	22	feet
H.	Tank Height / Length:	30	feet
I.	Average Vapor Space Height:	3	feet
J.	Tank Orientation:	V	Vertical or Horizontal
K.	Type of Roof:	D	Dome or Cone

L. Is the Tank Equipped with a Vapor Recovery System? X Yes ____ No
   If Yes, describe on separate sheet of paper and attach. Indicate efficiency.

M. Check the Type of Tank:
   - X Fixed Roof
   - ____ External Floating Roof
   - ____ Pressure
   - ____ Internal Floating Roof
   - ____ Variable Vapor Space
   - ____ Other, describe: ____

N. Check the Closest City:
   - X Jackson, Ms.
   - ____ Birmingham, Al.
   - ____ Memphis, Tn.
   - ____ Montgomery, Al.
   - ____ New Orleans, La.
   - ____ Baton Rouge, La.

O. Check the Tank Paint Color:
   - ____ Aluminum Specular
   - ____ Gray Light
   - ____ Aluminum Diffuse
   - ____ Gray Medium
   - ____ Red
   - ____ White
   - X Other, describe: Black

P. Tank Paint Condition: G Good or Poor

Q. Check Type of Tank Loading
   1. Trucks and Rail Cars
      - ____ Submerged Loading of clean cargo tank
      - X Submerged Loading : Dedicated Normal Service
      - ____ Submerged Loading : Dedicated Vapor Balance Service
      - ____ Splash Loading of clean cargo tank
      - ____ Splash Loading : Dedicated Normal Service
      - ____ Splash Loading : Dedicated Vapor Balance Service
   2. Marine Vessels - NOT APPLICABLE
      - ____ Submerged Loading: Ships
      - ____ Submerged Loading: Barges

TANK SUMMARY (page 2 of 2) SECTION H

R. For External Floating Roof Tanks NOT APPLICABLE

1. Check the Type of Tank Seal:

Mechanical Shoe

_____ Primary Seal Only

_____ With Shoe-Mounted Secondary Seal

_____ With Rim-Mounted Secondary Seal

Liquid Mounted Resilient Seal

_____ Primary Seal Only

_____ With Shoe-Mounted Secondary Seal

_____ With Rim-Mounted Secondary Seal

Vapor Mounted Resilient Seal

_____ Primary Seal Only

_____ With Shoe-Mounted Secondary Seal

_____ With Rim-Mounted Secondary Seal

2. Type of External Floating Roof: _____ Pontoon

_____ Double-Deck

S. For Internal Floating Roof Tanks NOT APPLICABLE

1. Check the Type of Tank Seal:

Liquid Mounted Resilient Seal

_____ Primary Seal Only

_____ With Rim-Mounted Secondary Seal

Vapor Mounted Resilient Seal

_____ Primary Seal Only

_____ With Rim-Mounted Secondary Seal

2. Number of Roof Columns: _____

3. Length of Deck Seam _____ feet:

4. Area of Deck: _____ feet^2

5. Effective Column Diameter: _____ feet

6. Check the Type of Tank:

_____ Bolted with Column Supported Roof

_____ Welded with Column Supported Roof

_____ Bolted with Self-Supported Roof

_____ Welded with Self-Supported Roof

5. Emissions Summary

	HAPs	VOCs		HAPs	VOCs	
1. Breathing Loss:	0.006	0.011	lb/day	.001	.002	TPY
2. Working Loss:	0.045	0.083	lb/day	.008	.015	TPY
3. Rueping Loss:	0.152	0.140	lb/day	.028	.026	TPY
4. Total Emissions:	0.203	0.234	lb/day	.037	.043	TPY

6. UTM Coordinates:

A. Zone 16 East B. North 1397893.10 C. East 629182.30

Revision: 1
Date: September 23, 1996

TANK SUMMARY (page 1 of 2) SECTION H

1. Emission Point No./Name: EP001-Work Tank Scrubber: Work Tank No. 2 (EU006)

2. Was this tank constructed or modified after August 7, 1977? X yes ____ no

   If yes please give date and explain. Construction of tank will begin upon receipt of a permit to construct

3. Product Stored: Creosote
   If more than one product is stored, provide the information in 4 A-E for each product.

4. Tank Data:

A.	True Vapor Pressure at storage temperature:	0.068	psia/°F
B.	Reid Vapor Pressure at storage temperature:	NA	psia/°F
C.	Density of product at storage temperature:	9.3	lb/gal
D.	Molecular Weight of product vapor at storage temperature:	128	lb/lbmol
E.	Throughput for most recent calendar year:	1.2 x 10'	gal/yr
F.	Tank Capacity:	57,000	gal
G.	Tank Diameter:	18	feet
H.	Tank Height / Length:	30	feet
I.	Average Vapor Space Height:	3	feet
J.	Tank Orientation:	V	Vertical or Horizontal
K.	Type of Roof:	D	Dome or Cone

L. Is the Tank Equipped with a Vapor Recovery System? X Yes ____ No
   If Yes, describe on separate sheet of paper and attach. Indicate efficiency.

M. Check the Type of Tank:
   - X Fixed Roof
   - ____ External Floating Roof
   - ____ Pressure
   - ____ Internal Floating Roof
   - ____ Variable Vapor Space
   - ____ Other, describe:

N. Check the Closest City:
   - X Jackson, Ms.
   - ____ Birmingham, Al.
   - ____ Memphis, Tn.
   - ____ Montgomery, Al.
   - ____ New Orleans, La.
   - ____ Baton Rouge, La.

O. Check the Tank Paint Color:
   - ____ Aluminum Specular
   - ____ Gray Light
   - ____ Aluminum Diffuse
   - ____ Gray Medium
   - ____ Red
   - ____ White
   - X Other, describe: Black

P. Tank Paint Condition: G Good or Poor

Q. Check Type of Tank Loading
   1. Trucks and Rail Cars
      - ____ Submerged Loading of clean cargo tank
      - X Submerged Loading : Dedicated Normal Service
      - ____ Submerged Loading : Dedicated Vapor Balance Service
      - ____ Splash Loading of clean cargo tank
      - ____ Splash Loading : Dedicated Normal Service
      - ____ Splash Loading : Dedicated Vapor Balance Service
   2. Marine Vessels - NOT APPLICABLE
      - ____ Submerged Loading: Ships
      - ____ Submerged Loading: Barges

TANK SUMMARY (page 2 of 2) SECTION H

R. For External Floating Roof Tanks NOT APPLICABLE

1. Check the Type of Tank Seal:

Mechanical Shoe

_____ Primary Seal Only

_____ With Shoe-Mounted Secondary Seal

_____ With Rim-Mounted Secondary Seal

Liquid Mounted Resilient Seal

_____ Primary Seal Only

_____ With Shoe-Mounted Secondary Seal

_____ With Rim-Mounted Secondary Seal

Vapor Mounted Resilient Seal

_____ Primary Seal Only

_____ With Shoe-Mounted Secondary Seal

_____ With Rim-Mounted Secondary Seal

2. Type of External Floating Roof: _____ Pontoon

_____ Double-Deck

S. For Internal Floating Roof Tanks NOT APPLICABLE

1. Check the Type of Tank Seal:

Liquid Mounted Resilient Seal

_____ Primary Seal Only

_____ With Rim-Mounted Secondary Seal

Vapor Mounted Resilient Seal

_____ Primary Seal Only

_____ With Rim-Mounted Secondary Seal

2. Number of Roof Columns: _____

3. Length of Deck Seam _____ feet:

4. Area of Deck: _____ feet^2

5. Effective Column Diameter: _____ feet

6. Check the Type of Tank:

_____ Bolted with Column Supported Roof

_____ Welded with Column Supported Roof

_____ Bolted with Self-Supported Roof

_____ Welded with Self-Supported Roof

5. Emissions Summary

	HAPs	VOCs		HAPs	VOCs	
1. Breathing Loss:	0.004	0.008	lb/day	.0007	.001	TPY
2. Working Loss:	0.033	0.061	lb/day	.006	.011	TPY
3. Rueping Loss:	0.303	0.559	lb/day	.055	.102	TPY
4. Total Emissions:	0.340	0.628	lb/day	.062	.115	TPY

6. UTM Coordinates:

A. Zone 16 East B. North 1397893.10 C. East 629182.30

Revision: 1
Date: September 23, 1996

TANK SUMMARY (page 1 of 2) SECTION H

1. **Emission Point No./Name:** EP001-Work Tank Scrubber: **Work Tank No. 1 (EU007)**

2. **Was this tank constructed or modified after August 7, 1977?** ___X___ yes _____ no

   If yes please give date and explain. Construction of tank will begin upon receipt of a permit to construct

3. **Product Stored:** Creosote
   If more than one product is stored, provide the information in 4 A-E for each product.

4. **Tank Data:**

A.	True Vapor Pressure at storage temperature:	0.068	psia/°F
B.	Reid Vapor Pressure at storage temperature:	NA	psia/°F
C.	Density of product at storage temperature:	9.3	lb/gal
D.	Molecular Weight of product vapor at storage temperature:	128	lb/lbmol
E.	Throughput for most recent calendar year:	1.2×10^7	gal/yr
F.	Tank Capacity:	57,000	gal
G.	Tank Diameter:	18	feet
H.	Tank Height / Length:	30	feet
I.	Average Vapor Space Height:	3	feet
J.	Tank Orientation:	V	Vertical or Horizontal
K.	Type of Roof:	D	Dome or Cone

L. Is the Tank Equipped with a Vapor Recovery System? ___X___ Yes _____ No
   If Yes, describe on separate sheet of paper and attach. Indicate efficiency.

M. Check the Type of Tank:
   - ___X___ Fixed Roof
   - _____ Pressure
   - _____ Variable Vapor Space
   - _____ Other, describe:
   - _____ External Floating Roof
   - _____ Internal Floating Roof

N. Check the Closest City:
   - ___X___ Jackson, Ms.
   - _____ Memphis, Tn.
   - _____ New Orleans, La.
   - _____ Birmingham, Al.
   - _____ Montgomery, Al.
   - _____ Baton Rouge, La.

O. Check the Tank Paint Color:
   - _____ Aluminum Specular
   - _____ Aluminum Diffuse
   - _____ Red
   - ___X___ Other, describe: Black
   - _____ Gray Light
   - _____ Gray Medium
   - _____ White

P. Tank Paint Condition: ___G___ Good or Poor

Q. Check Type of Tank Loading
   1. Trucks and Rail Cars
      - _____ Submerged Loading of clean cargo tank
      - ___X___ Submerged Loading : Dedicated Normal Service
      - _____ Submerged Loading : Dedicated Vapor Balance Service
      - _____ Splash Loading of clean cargo tank
      - _____ Splash Loading : Dedicated Normal Service
      - _____ Splash Loading : Dedicated Vapor Balance Service
   2. Marine Vessels - NOT APPLICABLE
      - _____ Submerged Loading: Ships
      - _____ Submerged Loading: Barges

TANK SUMMARY (page 2 of 2) SECTION H

R. For External Floating Roof Tanks NOT APPLICABLE

1. Check the Type of Tank Seal:

Mechanical Shoe
_____ Primary Seal Only
_____ With Shoe-Mounted Secondary Seal
_____ With Rim-Mounted Secondary Seal

Liquid Mounted Resilient Seal
_____ Primary Seal Only
_____ With Shoe-Mounted Secondary Seal
_____ With Rim-Mounted Secondary Seal

Vapor Mounted Resilient Seal
_____ Primary Seal Only
_____ With Shoe-Mounted Secondary Seal
_____ With Rim-Mounted Secondary Seal

2. Type of External Floating Roof: _____ Pontoon
_____ Double-Deck

S. For Internal Floating Roof Tanks NOT APPLICABLE

1. Check the Type of Tank Seal:

Liquid Mounted Resilient Seal
_____ Primary Seal Only
_____ With Rim-Mounted Secondary Seal

Vapor Mounted Resilient Seal
_____ Primary Seal Only
_____ With Rim-Mounted Secondary Seal

2. Number of Roof Columns: _____
3. Length of Deck Seam _____ feet:
4. Area of Deck: _____ feet^2
5. Effective Column Diameter: _____ feet
6. Check the Type of Tank:

_____ Bolted with Column Supported Roof
_____ Welded with Column Supported Roof
_____ Bolted with Self-Supported Roof
_____ Welded with Self-Supported Roof

5. Emissions Summary

	HAPs	VOCs		HAPs	VOCs	
1. Breathing Loss:	0.004	0.008	lb/day	.0007	.001	TPY
2. Working Loss:	0.033	0.061	lb/day	.006	.011	TPY
3. Rueping Loss:	0.303	0.559	lb/day	.055	.102	TPY
4. Total Emissions:	0.340	0.628	lb/day	.062	.115	TPY

6. UTM Coordinates:

A. Zone 16 East B. North 1397893.10 C. East 629182.30

KERR-McGEE CHEMICAL CORPORATION

KERR-McGEE CENTER • OKLAHOMA CITY OKLAHOMA 73125

October 1, 1996

Post-It® Fax Note 7671	Date 10/1	# of pages ▶ 21
To Bobby Hall	From Nicki Brook	
Co./Dept. MS DEQ	Co. Kerr-McGee	
Phone #	Phone #	
Fax #	Fax #	

Mr. Bobby Hall
Mississippi Department of Environmental Quality
Air Permitting Branch
Office of Air Pollution Control
P.O. Box 10385
Jackson, MS 39289-0385

RE: Title V Permit Application, Additional Information Number 2
Kerr-McGee Chemical Corporation, Columbus, Mississippi

Dear Mr. Hall:

As a follow-up to our telephone conversation on September 20, 1996, Kerr-McGee Chemical Corporation (KMCC) is submitting additional information per your request. I have reviewed our files as a first step in gathering the information you have requested relating to the Title V Synthetic Minor Permit Application and subsequent operating permit modification. Apparently after the Title V Permit Application was submitted, subsequent documents provided to the Department modified the original permit application. Therefore, I am providing comments, which I believe will bring the original permit application up to date and allow issuance of a Title V Synthetic Minor Permit for KMCC's Columbus, Mississippi wood preserving plant.

Relevant Submittals

Clean Air Act Title V Operating Permit Application, dated March 8, 1995

Clean Air Act Title V Operating Permit Application Executive Summary, dated March 8, 1995

Application For Air Pollution Control Permit To Construct And Operate Air Emission Equipment (two creosote work tanks), Spring 1995

Additional Information For The Synthetic Minor Operating Permit, November 8, 1995

NSPS Requirements Relating to Air Operating Permit 1680-00020, letter dated December 22, 1995

Modification of Air Emission Control Unit for Permit 1680-00020, letter dated January 20, 1996

Executive Summary Revisions

The narrative summary has been changed to reflect the completion of the covering of wastewater treatment tanks. In addition, a scrubber is in the process of being installed on the wastewater treatment

FOREST PRODUCTS

system and will be operational by October 31, 1996. Figure 2 in Section 2 of the original permit application accurately reflects the wastewater emission control system as of October 31, 1996.

Table E-3 of the "Clean Air Act Title V Operating Permit Application Executive Summary", dated March 8, 1995, has been revised to reflect actual point source emissions. Changes to Table E-3 are described by the following:

- Uncontrolled emissions from the retort and corresponding vacuum system are 8.01 TPY. Controlled emissions from the retort and corresponding vacuum system are 2.0 TPY. These calculations are shown in the Synthetic Minor Addendum, Section 2 of the original permit application.
- Calculations for the work tanks have been revised reflecting installation of the new scrubber system authorized by DEQ approval of the "Application For Air Pollution Control Permit To Construct And Operate Air Emission Equipment". Calculations for the work tanks are shown in the Synthetic Minor Addendum, Section 2 of the original permit application and the "Application For Air Pollution Control Permit To Construct And Operate Air Emission Equipment".
- Creosote storage tanks have been eliminated from Table E-3 since the facility does not operate any creosote storage tanks.
- Sap tanks have been eliminated from Table E-3 since the facility have closed these units and replaced these tanks with the Sap and Vacuum Seal Water Tank.. This Unit has been added to Table E-3.

Table E-4 of the "Clean Air Act Title V Operating Permit Application Executive Summary", dated March 8, 1995, has been revised to reflect appropriate fugitive emission source significant figures. No significant changes occurred in Table E-3.

Page 3.1 of 6 has been added to the executive summary reflecting installation of the wastewater treatment facility scrubber (EP0013).

Clean Air Act Title V Operating Permit Application, Section 2 Revisions
Treating system scrubber tables (EP001) in Section 2 of the original permit application have been revised to reflect installation of the new scrubber system. In addition, a table has been added for the wastewater treatment scrubber (EP013) .

Clean Air Act Title V Operating Permit Application, Section 3C Revisions
Confusion resulted in the actual numbering of the work tanks between the original permit application, the construction permit application and actual numbering at the facility. All tanks have been renumbered to reflect actual numbering in use at the present time. The summary below summarizes the changes:

WT Number	Old WT EU Number	New WT Number	New EU Number
Old Work Tank No. 1	EU004	Work Tank No. 4	EU004
Old Work Tank No. 2	EU005	Work Tank No. 3	EU005
Work Tank No. 3	EU006	Work Tank No. 2	EU006
Work Tank No. 4	EU007	Work Tank No. 1	EU007

All emission unit numbering remains constant. Section 3C work tank forms (SECTION H Forms) have been revised to reflect renumbering of the work tanks.

Framing mill particulate support calculations have been revised. At your ~~request, bin size~~ was evaluated to determine the effect on annual fugitive PM-10 emissions. Bin ~~size did not~~ impact annual fugitive PM-10 emissions. However, during this evaluation is discovered that a 10% AP-42 emission rate rather than the appropriate 1% emission rate specified by AP-42. Both bin size and emission rates have been corrected in the enclosure.

Summary
I believe these revisions address your questions regarding our Title V Synthetic Minor Permit Application. I must confess, that since the original application was submitted and revised by numerous submittals, it is not possible to go to one place and determine emission levels of the various facility sources. Revision of the original application with the enclosed pages should tie the package together.

KMCC greatly appreciate your understanding and cooperation in this matter. We look forward to your visit to the facility on October 7, 1996, at 12:00 p.m. to tour the facility and discuss the drafting of the synthetic minor permit. We understand operational controls will be required and we are eager to discuss the various options with you.

In the interim, should you have questions, please telephone me at (405) 270-2394.

Sincerely,

Kerr-McGee CHEMICAL CORPORATION
FOREST PRODUCTS DIVISION

Nicholas E. Bock
Manager - Environmental Affairs and Regulatory Compliance

Attachments

cc: C. Swann, Facility
S. McCormick, AquAeTer
S. Ladner

AquAeTer *optimizing environmental resources - water, air, earth*

AquAeTer, Inc.
TRANSMITTAL COVER PAGE

DATE: Sept. 30, 1996
JOB NUMBER: 960471
NO. OF PAGES: 9
(Includes Cover Page)

TRANSMIT TO:

COMPANY NAME	CONTACT NAME	FAX NUMBER
KERR MCGEE	NICK BOCK	(405) 270 2420
OK CITY		

TRANSMITTAL FROM: S. MCCORMICK

COMMENTS:

Please find attached revised pages for the Columbus air operating permit application.
Work tank forms to follow via E-mail.

215 Jamestown Park, Suite 204
Brentwood, Tennessee 37027

Phone: (615) 373-8532
FAX: (615) 373-8512

Revision: 1
Date: September 30, 1996

EXECUTIVE SUMMARY

Kerr-McGee Chemical Corporation (KMCC), Forest Products Division (FPD) operates a wood-treating facility for producing creosote-treated wood products, including railroad crossties, bridge pieces, and crossing pieces at a facility located in Columbus, Mississippi. Major operations at the plant site are summarized in Table E-1. The facility is requesting a Synthetic Minor Operating Permit for operations of the following processes:

1) sawmill activities, which emit particulate matter (PM and PM_{10});

2) boilers, which emit sulfur dioxides (SO_x), nitrous oxides (NO_x), carbon monoxide (CO), volatile organic carbons (VOCs), and PM and PM_{10} (PM of 10 microns or less);

3) wood-treating, which emits VOCs and hazardous air pollutants (HAPs);

4) a tank farm, which emits VOCs and HAPs;

5) a wastewater treatment system, which emits VOCs and HAPs;

6) fugitive emissions, which come from all the above processes plus roadway dust and the black-tie treated-wood storage yard; and

7) insignificant sources, which include any other potential air emission sources onsite.

KMCC currently operates sawmill operations and the boilers under Mississippi Department of Environmental Quality (MDEQ) Air Operating Permit No. 1680-00020. KMCC currently operates cyclones that control PM emissions from the three onsite sawmills, and they use low sulfur fuel for control of emissions from the onsite boilers. The wastewater treatment system tankage is covered to control emissions and any emissions will be sent through a scrubber. Previously, a new work tank and a scrubber were installed that met the new source performance standards (NSPS) specification for air emission controls of 95 percent efficiency. The tank was permitted as a new source. Creosote work tanks do not have to meet new source performance standards (NSPS) because this chemical falls below the vapor pressures specified. KMCC has installed a scrubber through which most air streams containing VOCs and HAPs vent prior to discharge to the atmosphere. The new scrubber and the scrubber on the wastewater treatment facility will meet an efficiency of 75 percent.

Emission factors have been developed for the KMCC operations across the country based on data collected from seven KMCC facilities, other creosote treaters where the data have been accepted by the U.S. EPA, published emission factors, such as, AP-42 and Synthetic Organic Chemicals Manufacturing Industry (SOCMI) factors, and manufacturers specifications. These emission factors are summarized in Table E-2. Using these emission factors, air emissions from the facility are summarized in Tables E-3 and E-4. Based on the air emission inventory and the factors developed for the KMCC facilities and the Columbus facility, specifically, KMCC is requesting a Synthetic Minor Operating Permit.

?

TABLE E-3. COLUMBUS POINT SOURCE EMISSIONS SUMMARY - OPERATIONS AS OF OCTOBER 31, 1994

Revision: 1
Date: September 30, 1994

POINT SOURCE	NUMBER	EU __	EP __	CU __	CRITERIA POLLUTANTS (tons/yr) PM	PM-10	CO	SO2	NOx	VOCs	HAPs (tons/yr) MAX	COMB
PROCESS												
Primary Boiler	1	012	005		0.5	0.5	5.21					
Stand-By Boiler	1	013	005		0.16	0.16	2.19	7.84	16.83			
Retort and Con. Vacuum System	3	001 - 003	002					0.04	2.77	0.408		
Retort Doors	3	001A - 003A	001A	003						0.188		
Cyclones:										1.888		
Framing Mill	1	023	007		28.10	14.99				1.430	0.060	
Switch Tie Unloader	1	024	003	002A/B	2.63	3.83					0.074	0.078
Cross Tie Unloader	1	025	004	003	13.77	6.89						0.095
Pre-Plating				004								
End Plating												
Gumun Sealer												
Train Loading												
SITE												
Primary Oil/Water Separator	2	014 - 015	006									
Secondary Oil/Water Separator	1	016	003	001								
Groundwater Oil/Water Separator	1	021	003	003								
Surge Tank	1	017	003	003								
Aeration Basins	3	018 - 020	003	003								
Tank Farm												
Work Tank 4												
Breathing Loss	1	004	001	001					0.004	0.000	0.001	
Working Loss	1	004	001	001					0.004	0.000	0.001	
Emptying Loss	1	004	001	001					0.020	0.001	0.001	
Work Tank 3									0.008	0.001	0.001	
Breathing Loss	1	005	001	001					0.563	0.237	0.001	
Working Loss	1	005	001	001							0.107	
Emptying Loss	1	005	001	001								
Work Tank 2												
Breathing Loss	1	006	001	001					0.002	0.001	0.001	
Working Loss	1	006	001	001					0.006	0.000	0.001	
Emptying Loss	1	006	001	001					0.055	0.023	0.003	
Work Tank 1											0.030	
Breathing Loss	1	007	001	001					0.008	0.001	0.001	
Working Loss	1	007	001	001					0.008	0.004	0.085	
Emptying Loss	1	007	001	001					0.076	0.032	0.041	
Hot Tank												
Rinse and Vacuum Seal Water Tank	1	008	001	001					0.002	0.001	0.000	
Rechine Tank:	1	009	001	001					0.004	0.003	0.000	
Breathing Loss	1	009	006	001					0.015	0.023	0.030	
Working Loss	1	022	001	001							0.030	
Building ("Hot") Sump	1	022	001	001					0.002	0.001		
	1	026	001	001					0.006	0.003	0.001	
SUBTOTAL									0.015	0.023	0.003	
									3.845	1.279	0.030	
									0.034	0.045	1.632	
											0.080	
					38.18	25.97	7.40	7.01	29.63	8.96	0.004	
											0.000	
											0.000	
											0.000	
											0.001	
											0.000	
											0.001	
											0.000	
										9.11	2.17	

ber:

missions reported in this table reflect emissions calculated for the Application Addendum for a Synthetic Minor Operating Permit affixed to the front of the Application for Title V Air Pollution Control Permit to Operate. Air Emission
pment and dated March 1993.
e Building ("Hot") Sump now appears on Table E-3, Columbus Point Source Emissions Summary.

Oct. 1. 1996 3:27PM AQUASTER INC. 615 373 8512 No. 8158 P. P. 7.

TABLE E-4. COLUMBUS FUGITIVE SOURCE EMISSIONS SUMMARY - OPERATIONS OF OCTOBER 31, 1996

Revision: 1
Date: September 30, 1996

FUGITIVE SOURCE	NUMBER	EU__	EP__	CRITERIA POLLUTANTS (tons/yr)						HAPs (tons/yr)	
				PM	PM-10	CO	SO_2	NO_x	VOCs	MAX	COMB
Heavy Liquid Valves	121	NA	NA	-	-	-	-	-	0.03	0.01	0.02
Pressure Vent Relief Valves	3	NA	NA	-	-	-	-	-	0.30	0.13	0.16
Flanges	88	NA	NA	-	-	-	-	-	0.87	0.03	0.04
Heavy Liquid Pump Seals	20	NA	NA	-	-	-	-	-	0.41	0.17	0.22
Roads	NA	NA	NA	-	5.90	-	-	-	-	-	-
Drip Pad	1	NA	NA	-	-	-	-	-	0.08	0.03	0.04
Tank Farm Containment	1	NA	NA	-	-	-	-	-	0.04	0.02	0.02
Black Tie Storage	NA	NA	NA	-	-	-	-	-	3.45	2.29	3.00
Sumps	11	NA	NA	-	-	-	-	-	0.34	0.14	0.18
Woodwaste		NA	NA	-	-	-	-	-	-	-	-
SUBTOTAL				5.80	2.89	-	-	-	5.83	3.69	
				NA (a)	NA	NA	NA	NA	NA		

POINT AND APPLICABLE FUGITIVE SOURCES (b)	CRITERIA POLLUTANTS (c) (tons/yr)						HAPs (tons/yr)	
	PM	PM-10	CO	SO_2	NO_x	VOCs	MAX	COMB
TOTAL	51.28	25.97	7.40	7.28	29.62	8.96	4.64	6.06

Notes:

(a) Not Applicable, as fugitive criteria pollutants are not counted toward major source determination

(b) Refer to Table E-3 for Point Source emissions totals.

(c) Fugitive criteria pollutants are not counted toward the determination of major source as per USEPA memorandum from Lydia Wegman, deputy director of the Office of Air Quality Planning and Standards, March 8, 1994 and legal citation Clean Air Act Implementation Projects vs. USEPA, CADC No. 92-1303.

Other:

. Emissions reported in this table reflect emissions calculated for the Application Addendum for a Synthetic Minor Operating Permit affixed to the front of the Application for Title V Air Pollution Control Permit to Operate ir Emission Equipment and dated March 1995.

The Building ("Hot") Sump now appears on Table E-3, Columbus Point Source Emissions Summary .

Revision: 1
Date: September 30, 1996

Synthetic Minor Operating Scenario Emission Summary

Emission Point

EP001 Treating System Scrubber

Emission Unit	UTM Coordinates		Uncontrolled Emission Rate (lbs/day)			Uncontrolled Emission Rate (tons/yr)			Controlled Emission Rate (lbs/day)			Controlled Emission Rate (tons/yr)		
	North	East	Naph	HAPs	VOCs	Naph	HAPs	VOCs	Naph	HAPs	VOCs	Naph	HAPs	VOCs
Retort and Corresponding Vacuum System	1397846.59	629267.66	1.317	1.702	43.883	0.240	0.311	8.009	0.329	0.425	10.971	0.060	0.078	2.002
Work Tank 4	1397893.10	629183.30	0.578	0.747	1.376	0.105	0.136	0.251	0.144	0.187	0.344	0.026	0.034	0.063
Work Tank 3	1397882.63	629207.11	0.792	1.023	1.886	0.145	0.187	0.344	0.198	0.256	0.471	0.036	0.047	0.086
Work Tank 2	1397853.69	629168.56	0.578	0.747	1.376	0.105	0.136	0.251	0.144	0.187	0.344	0.026	0.034	0.063
Work Tank 1	1397851.34	629138.43	0.578	0.747	1.376	0.105	0.136	0.251	0.144	0.187	0.344	0.026	0.034	0.063
Hot Tank	1397879.61	629130.39	-	-	-	-	-	-	7.008	9.054	16.683	1.279	1.652	3.045
POWs (2)	1397878.34 1397899.37	629142.68 629148.80	0.204	0.264	0.486	0.037	0.048	0.089	0.002	0.003	0.005	0.000	0.000	0.001
Building Sump	1397846.59	629267.66	0.057	0.073	0.135	0.010	0.013	0.025	0.001	0.001	0.001	0.000	0.000	0.000
Sap and Vacuum Seal Water Tank	1397846.59	629267.66	0.189	0.244	0.450	0.034	0.045	0.082	-	-	-	-	-	-
Reclaim Tank	1397878.34	629142.68	0.019	0.024	0.045	0.003	0.004	0.008	0.005	0.006	0.011	0.001	0.001	0.002

Other:

1. This table appears immediately behind the title page for EP001, Treating System Scrubber and following the various schematics within the Application Addendum for a Synthetic Minor Operating Permit affixed to the front of the Application for Air Pollution Control Permit to Operate Air Emissions Equipment.

Revision: 1
Date: September 30, 1996

Synthetic Minor Operating Scenario Emission Summary

Emission Point

EP013 Wastewater Treatment Facility Scrubber

Emission Unit	UTM Coordinates		Uncontrolled Emission Rate (lbs/day)			Uncontrolled Emission Rate (tons/yr)			Controlled Emission Rate (lbs/day)			Controlled Emission Rate (tons/yr)		
	North	East	Naph	HAPs	VOCs	Naph	HAPs	VOCs	Naph	HAPs	VOCs	Naph	HAPs	VOCs
Groundwater Oil/Water Separator	1397973.68	629058.79	0.551	0.712	1.311	0.101	0.130	0.239	0.006	0.007	0.013	0.001	0.001	0.002
Secondary Oil/Water Separator	1398024.42	629043.56	0.885	1.144	2.108	0.162	0.209	0.385	0.009	0.011	0.021	0.002	0.002	0.004
SOW Surge Tank	1398040.64	629014.51	0.264	0.341	0.628	0.048	0.062	0.115	0.003	0.003	0.006	0.000	0.001	0.001

Other:

1. This table appears immediately behind the title page for EP013, Wastewater Treatment Facility Scrubber and following the Support Calculations for EP001, Treating System Scrubber within the Application Addendum for a Synthetic Minor Operating Permit affixed to the front of the Application for Air Pollution Control Permit to Operate Air Emissions Equipment.

Revision: 1
Date: September 30, 1996

PLANT: Columbus
PROCESS UNIT: Framing Mill (Crossings, Panels, Bridge)
EMISSION: Actual Particulates: PM, PM-10

Wood Waste Emission Factor

The variety of cuts, all to customer specifications, made at each of the three saw mills, precludes any wood waste estimates based on saw cuts. Therefore, wood waste will be quantified by the number of 40 yard containers filled and removed weekly.

	Width (in)	Depth (in)	Length (ft)
1. Dimensions of tie (W x L x D)	6	8	8.5
2. Weight of tie (lb)	175		
3. Cubic feet of tie (ft3)	2.83		
4. Pound per cubic foot (lb/ft3)	61.76		
5. Weight of cubic foot of sawdust (lb/ft3)	31.185		
6. Weight of cubic yard of sawdust (lb/yd3)	842.00		

Maximum Emissions

	Unit	
Number of units	1	
Maximum number of 40-CuYd bins filled	1.5 bins/week	
	78 bins/yr	
Maximum volume of wood waste produced	2,627,024 lb/yr	= 7187.327 lb/day
	1,313.51 ton/yr	99%
Maximum pounds of wood waste/container	33,679.80 lbs/bin	= 90% of wood waste Collected By Cyclone
Maximum pounds of PM/container	336.80 lbs/bin	PM is assumed to be 1 percent of wood waste volume
Maximum pounds of PM-10/container	168.40 lbs/bin	PM-10 is assumed to be 50 percent of PM volume
Fugitive PM loss from Container	3.37 lbs/bin	1 percent emission rate from AP-42
Fugitive PM-10 loss from Container	1.68 lbs/bin	1 percent emission rate from AP-42
PM Collected By Cyclone	374.22 lbs/bin	= PM Cyclone Collects per bin
PM-10 Collected By Cyclone	187.11 lbs/bin	
Fugitive PM loss from Cyclone	37.42 lbs/bin	of Fugitive PM from Cyclone per bin
Fugitive PM-10 loss from Cyclone	18.71 lbs/bin	of Fugitive PM-10 from Cyclone per bin
Total PM Generated By Framing Mill Building	393.92 lbs/bin	= Cyclone Collects 95% PM Framing Mill Building
Total PM-10 Generated By Framing Mill Building	196.96 lbs/bin	
PM Uncollected from Building by Cyclone	19.70 lbs/bin	= 5% Building PM Uncollected by Cyclone
PM-10 Uncollected from Building by Cyclone	9.85 lbs/bin	
Building Fugitive PM	0.20 lbs/bin	= Building Controls 99% of 5% Fugitive PM
Building Fugitive PM-10	0.10 lbs/bin	
Total Fugitive PM from Framing Mill	40.99 lbs/bin	
Total Fugitive PM-10 from Framing Mill	20.49 lbs/bin	
Annual Number of Bins	78	
Total Annual Fugitive PM	1.60 ton/yr	
	8.76 lbs/day	
Total Annual Fugitive PM-10	0.80 ton/yr	
	4.38 lbs/day	

Assumptions

1. Pound per cubic foot of tie is based on a 6 x 8 tie at 175 lb.
2. PM is assumed to be 1 percent of woodwaste produced. The original submission included an incorrect value of 10 percent for this relationship. Refer to other cutting operations for confirmation.

References

1. Emission factors for wood waste were found in AP-42 10.4.3

Revision: 1
Date: September 30, 1996

PLANT: Columbus
PROCESS UNIT: Framing Mill (Crossings, Panels, Bridge)
EMISSION: Maximum Particulates: PM, PM-10

Wood Waste Emission Factor

The variety of cuts, all to customer specifications, made at each of the three saw mills, precludes any wood waste estimates based on saw cuts. Therefore, wood waste will be quantified by the number of 40 yard containers filled and removed weekly.

	Width (in)	Depth (in)	Length (ft)
1. Dimensions of tie (W x L x D)	6	8	8.5
2. Weight of tie (lb)	175		
3. Cubic feet of tie (ft3)	2.83		
4. Pound per cubic foot (lb/ft3)	61.76		
5. Weight of cubic foot of sawdust (lb/ft3)	31.185		
6. Weight of cubic yard of sawdust (lb/yd3)	842.00		

$\frac{40\ yd^3}{} \Big| \frac{(3\ ft)^3}{1\ yd^3} = 1080\ ft^3/bin$

$\frac{31.185\ lbs}{ft^3} \Big| \frac{1080\ ft^3}{bin} = 33{,}679.8\ lbs/bin$

Maximum Emissions

		Unit
Number of units	1	
Maximum number of 40-CuYd bins filled	3.0	bins/week
	156	bins/yr
Maximum volume of wood waste produced	5,254,049	lb/yr = 14394.65 lb/day
	2,627.02	ton/yr
Maximum pounds of wood waste/container	33,679.80	lbs/bin = 90% of wood waste Collected By Cyclone
Maximum pounds of PM/container	336.80	lbs/bin PM is assumed to be 1 percent of wood waste volume
Maximum pounds of PM-10/container	168.40	lbs/bin PM-10 is assumed to be 50 percent of PM volume
Fugitive PM loss from Container	3.37	lbs/bin 1 percent emission rate from AP-42
Fugitive PM-10 loss from Container	1.68	lbs/bin 1 percent emission rate from AP-42
PM Collected By Cyclone	374.22	lbs/bin = PM Cyclone Collects per bin
PM-10 Collected By Cyclone	187.11	lbs/bin
Fugitive PM loss from Cyclone	37.42	lbs/bin of Fugitive PM from Cyclone per bin 10% of total PM
Fugitive PM-10 loss from Cyclone	18.71	lbs/bin of Fugitive PM-10 from Cyclone per bin
Total PM Generated By Framing Mill Building	393.92	lbs/bin = Cyclone Collects 95% PM Framing Mill Building
Total PM-10 Generated By Framing Mill Building	196.96	lbs/bin
PM Uncollected from Building by Cyclone	19.70	lbs/bin = 5% Building PM Uncollected by Cyclone
PM-10 Uncollected from Building by Cyclone	9.85	lbs/bin
Building Fugitive PM	0.20	lbs/bin = Building Controls 99% of 5% Fugitive PM
Building Fugitive PM-10	0.10	lbs/bin
Total Fugitive PM from Framing Mill	40.99	lbs/bin
Total Fugitive PM-10 from Framing Mill	20.49	lbs/bin
Annual Number of Bins	156	
Total Annual Fugitive PM	3.20	ton/yr
	17.52	lbs/day → 0.73 lbs/hr
Total Annual Fugitive PM-10	1.60	ton/yr
	8.76	lbs/day → 0.365 lbs/hr

Assumptions
1. Pound per cubic foot of tie is based on a 6 x 8 tie at 175 lb.
2. PM is assumed to be 1 percent of woodwaste produced. The original submission included an incorrect value of 10 percent for this relationship. Refer to other cutting operations for confirmation.

References
1. Emission factors for wood waste were found in AP-42 10.4.3

Revision: 1
Date: September 23, 1996

TANK SUMMARY (page 1 of 2) SECTION H

1. Emission Point No./Name: EP001-Work Tank Scrubber: Work Tank No. 4 (EU004)

2. Was this tank constructed or modified after August 7, 1977? X yes ____ no

   If yes please give date and explain. Construction of tank will begin upon receipt of a permit to construct

3. Product Stored: Creosote
   If more than one product is stored, provide the information in 4 A-E for each product.

4. Tank Data:

A.	True Vapor Pressure at storage temperature:	0.068	psia/°F
B.	Reid Vapor Pressure at storage temperature:	NA	psia/°F
C.	Density of product at storage temperature:	9.3	lb/gal
D.	Molecular Weight of product vapor at storage temperature:	128	lb/lbmol
E.	Throughput for most recent calendar year:	1.2×10^7	gal/yr
F.	Tank Capacity:	57,000	gal
G.	Tank Diameter:	18	feet
H.	Tank Height / Length:	30	feet
I.	Average Vapor Space Height:	3	feet
J.	Tank Orientation:	V	Vertical or Horizontal
K.	Type of Roof:	D	Dome or Cone

L. Is the Tank Equipped with a Vapor Recovery System? X Yes ____ No
   If Yes, describe on separate sheet of paper and attach. Indicate efficiency.

M. Check the Type of Tank:
   - X Fixed Roof
   - ____ Pressure
   - ____ Variable Vapor Space
   - ____ Other, describe:
   - ____ External Floating Roof
   - ____ Internal Floating Roof

N. Check the Closest City:
   - X Jackson, Ms.
   - ____ Memphis, Tn.
   - ____ New Orleans, La.
   - ____ Birmingham, AL
   - ____ Montgomery, AL
   - ____ Baton Rouge, La.

O. Check the Tank Paint Color:
   - ____ Aluminum Specular
   - ____ Aluminum Diffuse
   - ____ Red
   - X Other, describe: Black
   - ____ Gray Light
   - ____ Gray Medium
   - ____ White

P. Tank Paint Condition: G Good or Poor

Q. Check Type of Tank Loading
   1. Trucks and Rail Cars
      - ____ Submerged Loading of clean cargo tank
      - X Submerged Loading : Dedicated Normal Service
      - ____ Submerged Loading : Dedicated Vapor Balance Service
      - ____ Splash Loading of clean cargo tank
      - ____ Splash Loading : Dedicated Normal Service
      - ____ Splash Loading : Dedicated Vapor Balance Service
   2. Marine Vessels - NOT APPLICABLE
      - ____ Submerged Loading: Ships
      - ____ Submerged Loading: Barges

TANK SUMMARY (page 2 of 2)

SECTION H

R. For External Floating Roof Tanks NOT APPLICABLE

1. Check the Type of Tank Seal:

Mechanical Shoe
_____ Primary Seal Only
_____ With Shoe-Mounted Secondary Seal
_____ With Rim-Mounted Secondary Seal

Liquid Mounted Resilient Seal
_____ Primary Seal Only
_____ With Shoe-Mounted Secondary Seal
_____ With Rim-Mounted Secondary Seal

Vapor Mounted Resilient Seal
_____ Primary Seal Only
_____ With Shoe-Mounted Secondary Seal
_____ With Rim-Mounted Secondary Seal

2. Type of External Floating Roof: _____ Pontoon
_____ Double-Deck

S. For Internal Floating Roof Tanks NOT APPLICABLE

1. Check the Type of Tank Seal:

Liquid Mounted Resilient Seal
_____ Primary Seal Only
_____ With Rim-Mounted Secondary Seal

Vapor Mounted Resilient Seal
_____ Primary Seal Only
_____ With Rim-Mounted Secondary Seal

2. Number of Roof Columns: _____
3. Length of Deck Seam _____ feet
4. Area of Deck: _____ feet^2
5. Effective Column Diameter: _____ feet
6. Check the Type of Tank:
_____ Bolted with Column Supported Roof
_____ Welded with Column Supported Roof
_____ Bolted with Self-Supported Roof
_____ Welded with Self-Supported Roof

5. Emissions Summary

	HAPs	VOCs		HAPs	VOCs	
1. Breathing Loss:	0.004	0.008	lb/day	.0007	.001	TPY
2. Working Loss:	0.033	0.061	lb/day	.006	.011	TPY
3. Rueping Loss:	0.303	0.559	lb/day	.055	.102	TPY
4. Total Emissions:	0.340	0.628	lb/day	.062	.115	TPY

6. UTM Coordinates:
A. Zone 16 East B. North 1397893.10 C. East 629182.30

TANK SUMMARY (page 1 of 2)

SECTION H

1. Emission Point No./Name: EP001-Work Tank Scrubber: Work Tank No. 3 (EU005)

2. Was this tank constructed or modified after August 7, 1977? X yes ____ no

   If yes please give date and explain. Construction of tank will begin upon receipt of a permit to construct

3. Product Stored: Creosote
   If more than one product is stored, provide the information in 4 A-E for each product.

4. Tank Data:

A.	True Vapor Pressure at storage temperature:	0.068	psia/°F
B.	Reid Vapor Pressure at storage temperature:	NA	psia/°F
C.	Density of product at storage temperature:	9.3	lb/gal
D.	Molecular Weight of product vapor at storage temperature:	128	lb/lbmol
E.	Throughput for most recent calendar year:	1.6×10^7	gal/yr
F.	Tank Capacity:	78,000	gal
G.	Tank Diameter:	22	feet
H.	Tank Height / Length:	30	feet
I.	Average Vapor Space Height:	3	feet
J.	Tank Orientation:	V	Vertical or Horizontal
K.	Type of Roof:	D	Dome or Cone

L. Is the Tank Equipped with a Vapor Recovery System? X Yes ____ No
   If Yes, describe on separate sheet of paper and attach. Indicate efficiency.

M. Check the Type of Tank:
   - X Fixed Roof
   - ____ Pressure
   - ____ Variable Vapor Space
   - ____ Other, describe:
   - ____ External Floating Roof
   - ____ Internal Floating Roof

N. Check the Closest City:
   - X Jackson, Ms.
   - ____ Memphis, Tn.
   - ____ New Orleans, La.
   - ____ Birmingham, Al.
   - ____ Montgomery, Al.
   - ____ Baton Rouge, La.

O. Check the Tank Paint Color:
   - ____ Aluminum Specular
   - ____ Aluminum Diffuse
   - ____ Red
   - X Other, describe: Black
   - ____ Gray Light
   - ____ Gray Medium
   - ____ White

P. Tank Paint Condition: G Good or Poor

Q. Check Type of Tank Loading

1. Trucks and Rail Cars
   - ____ Submerged Loading of clean cargo tank
   - X Submerged Loading : Dedicated Normal Service
   - ____ Submerged Loading : Dedicated Vapor Balance Service
   - ____ Splash Loading of clean cargo tank
   - ____ Splash Loading : Dedicated Normal Service
   - ____ Splash Loading : Dedicated Vapor Balance Service

2. Marine Vessels - NOT APPLICABLE
   - ____ Submerged Loading: Ships
   - ____ Submerged Loading: Barges

TANK SUMMARY (page 2 of 2)

SECTION H

R. For External Floating Roof Tanks NOT APPLICABLE

1. Check the Type of Tank Seal:

Mechanical Shoe
_____ Primary Seal Only
_____ With Shoe-Mounted Secondary Seal
_____ With Rim-Mounted Secondary Seal

Liquid Mounted Resilient Seal
_____ Primary Seal Only
_____ With Shoe-Mounted Secondary Seal
_____ With Rim-Mounted Secondary Seal

Vapor Mounted Resilient Seal
_____ Primary Seal Only
_____ With Shoe-Mounted Secondary Seal
_____ With Rim-Mounted Secondary Seal

2. Type of External Floating Roof: _____ Pontoon
_____ Double-Deck

S. For Internal Floating Roof Tanks NOT APPLICABLE

1. Check the Type of Tank Seal:

Liquid Mounted Resilient Seal
_____ Primary Seal Only
_____ With Rim-Mounted Secondary Seal

Vapor Mounted Resilient Seal
_____ Primary Seal Only
_____ With Rim-Mounted Secondary Seal

2. Number of Roof Columns: _____
3. Length of Deck Seam _____ feet:
4. Area of Deck: _____ feet^2
5. Effective Column Diameter: _____ feet
6. Check the Type of Tank:

_____ Bolted with Column Supported Roof
_____ Welded with Column Supported Roof
_____ Bolted with Self-Supported Roof
_____ Welded with Self-Supported Roof

5. Emissions Summary

	HAPs	VOCs		HAPs	VOCs	
1. Breathing Loss:	0.006	0.011	lb/day	.001	.002	TPY
2. Working Loss:	0.045	0.083	lb/day	.008	.015	TPY
3. Rueping Loss:	0.152	0.140	lb/day	.028	.026	TPY
4. Total Emissions:	0.203	0.234	lb/day	.037	.043	TPY

6. UTM Coordinates:
A. Zone 16 East B. North 1397893.10 C. East 629182.30

Revision: 1
Date: September 23, 1996

TANK SUMMARY (page 1 of 2)

SECTION H

1. Emission Point No./Name: EP001-Work Tank Scrubber: Work Tank No. 2 (EU006)

2. Was this tank constructed or modified after August 7, 1977? X yes ____ no

   If yes please give date and explain. Construction of tank will begin upon receipt of a permit to construct

3. Product Stored: Creosote
   If more than one product is stored, provide the information in 4 A-E for each product.

4. Tank Data:

A.	True Vapor Pressure at storage temperature:	0.068	psia/°F
B.	Reid Vapor Pressure at storage temperature:	NA	psia/°F
C.	Density of product at storage temperature:	9.3	lb/gal
D.	Molecular Weight of product vapor at storage temperature:	128	lb/lbmol
E.	Throughput for most recent calendar year:	1.2×10^7	gal/yr
F.	Tank Capacity:	57,000	gal
G.	Tank Diameter:	18	feet
H.	Tank Height / Length:	30	feet
I.	Average Vapor Space Height:	3	feet
J.	Tank Orientation:	V	Vertical or Horizontal
K.	Type of Roof:	D	Dome or Cone

L. Is the Tank Equipped with a Vapor Recovery System? X Yes ____ No
   If Yes, describe on separate sheet of paper and attach. Indicate efficiency.

M. Check the Type of Tank:
   - X Fixed Roof
   - ____ Pressure
   - ____ Variable Vapor Space
   - ____ Other, describe:
   - ____ External Floating Roof
   - ____ Internal Floating Roof

N. Check the Closest City:
   - X Jackson, Ms.
   - ____ Memphis, Tn.
   - ____ New Orleans, La.
   - ____ Birmingham, Al.
   - ____ Montgomery, Al.
   - ____ Baton Rouge, La.

O. Check the Tank Paint Color:
   - ____ Aluminum Specular
   - ____ Aluminum Diffuse
   - ____ Red
   - X Other, describe: Black
   - ____ Gray Light
   - ____ Gray Medium
   - ____ White

P. Tank Paint Condition: G Good or Poor

Q. Check Type of Tank Loading

1. Trucks and Rail Cars
   - ____ Submerged Loading of clean cargo tank
   - X Submerged Loading : Dedicated Normal Service
   - ____ Submerged Loading : Dedicated Vapor Balance Service
   - ____ Splash Loading of clean cargo tank
   - ____ Splash Loading : Dedicated Normal Service
   - ____ Splash Loading : Dedicated Vapor Balance Service

2. Marine Vessels - NOT APPLICABLE
   - ____ Submerged Loading: Ships
   - ____ Submerged Loading: Barges

SECTION H

TANK SUMMARY (page 2 of 2)

R. For External Floating Roof Tanks NOT APPLICABLE

1. Check the Type of Tank Seal:

Mechanical Shoe
_____ Primary Seal Only
_____ With Shoe-Mounted Secondary Seal
_____ With Rim-Mounted Secondary Seal

Liquid Mounted Resilient Seal
_____ Primary Seal Only
_____ With Shoe-Mounted Secondary Seal
_____ With Rim-Mounted Secondary Seal

Vapor Mounted Resilient Seal
_____ Primary Seal Only
_____ With Shoe-Mounted Secondary Seal
_____ With Rim-Mounted Secondary Seal

2. Type of External Floating Roof: _____ Pontoon
_____ Double-Deck

S. For Internal Floating Roof Tanks NOT APPLICABLE

1. Check the Type of Tank Seal:

Liquid Mounted Resilient Seal
_____ Primary Seal Only
_____ With Rim-Mounted Secondary Seal

Vapor Mounted Resilient Seal
_____ Primary Seal Only
_____ With Rim-Mounted Secondary Seal

2. Number of Roof Columns: _____
3. Length of Deck Seam _____ feet:
4. Area of Deck: _____ feet^2
5. Effective Column Diameter: _____ feet
6. Check the Type of Tank:
_____ Bolted with Column Supported Roof
_____ Welded with Column Supported Roof
_____ Bolted with Self-Supported Roof
_____ Welded with Self-Supported Roof

5. Emissions Summary

	HAPs	VOCs		HAPs	VOCs	
1. Breathing Loss:	0.004	0.008	lb/day	.0007	.001	TPY
2. Working Loss:	0.033	0.061	lb/day	.006	.011	TPY
3. Rueping Loss:	0.303	0.559	lb/day	.055	.102	TPY
4. Total Emissions:	0.340	0.628	lb/day	.062	.115	TPY

6. UTM Coordinates:
A. Zone 16 East B. North 1397893.10 C. East 629182.30

Revision: 1
Date: September 23, 1996

SECTION H

TANK SUMMARY (page 1 of 2)

1. Emission Point No./Name: EP001-Work Tank Scrubber: Work Tank No. 1 (EU007)

2. Was this tank constructed or modified after August 7, 1977? X yes ____ no

   If yes please give date and explain. Construction of tank will begin upon receipt of a permit to construct

3. Product Stored: Creosote
   If more than one product is stored, provide the information in 4 A-E for each product.

4. Tank Data:

A.	True Vapor Pressure at storage temperature:	0.068	psia/°F
B.	Reid Vapor Pressure at storage temperature:	NA	psia/°F
C.	Density of product at storage temperature:	9.3	lb/gal
D.	Molecular Weight of product vapor at storage temperature:	128	lb/lbmol
E.	Throughput for most recent calendar year:	1.2×10^7	gal/yr
F.	Tank Capacity:	57,000	gal
G.	Tank Diameter:	18	feet
H.	Tank Height / Length:	30	feet
I.	Average Vapor Space Height:	3	feet
J.	Tank Orientation:	V	Vertical or Horizontal
K.	Type of Roof:	D	Dome or Cone
L.	Is the Tank Equipped with a Vapor Recovery System?	X Yes	____ No

   If Yes, describe on separate sheet of paper and attach. Indicate efficiency.

M. Check the Type of Tank:
   - X Fixed Roof
   - ____ Pressure
   - ____ Variable Vapor Space
   - ____ Other, describe:
   - ____ External Floating Roof
   - ____ Internal Floating Roof

N. Check the Closest City:
   - X Jackson, Ms.
   - ____ Memphis, Tn.
   - ____ New Orleans, La.
   - ____ Birmingham, Al.
   - ____ Montgomery, Al.
   - ____ Baton Rouge, La.

O. Check the Tank Paint Color:
   - ____ Aluminum Specular
   - ____ Aluminum Diffuse
   - ____ Red
   - X Other, describe: Black
   - ____ Gray Light
   - ____ Gray Medium
   - ____ White

P. Tank Paint Condition: G Good or Poor

Q. Check Type of Tank Loading

1. Trucks and Rail Cars
   - ____ Submerged Loading of clean cargo tank
   - X Submerged Loading : Dedicated Normal Service
   - ____ Submerged Loading : Dedicated Vapor Balance Service
   - ____ Splash Loading of clean cargo tank
   - ____ Splash Loading : Dedicated Normal Service
   - ____ Splash Loading : Dedicated Vapor Balance Service

2. Marine Vessels - NOT APPLICABLE
   - ____ Submerged Loading: Ships
   - ____ Submerged Loading: Barges

SECTION H

TANK SUMMARY (page 2 of 2)

R. For External Floating Roof Tanks NOT APPLICABLE

1. Check the Type of Tank Seal:

Mechanical Shoe

_____ Primary Seal Only
_____ With Shoe-Mounted Secondary Seal
_____ With Rim-Mounted Secondary Seal

Liquid Mounted Resilient Seal

_____ Primary Seal Only
_____ With Shoe-Mounted Secondary Seal
_____ With Rim-Mounted Secondary Seal

Vapor Mounted Resilient Seal

_____ Primary Seal Only
_____ With Shoe-Mounted Secondary Seal
_____ With Rim-Mounted Secondary Seal

2. Type of External Floating Roof: _____ Pontoon
_____ Double-Deck

S. For Internal Floating Roof Tanks NOT APPLICABLE

1. Check the Type of Tank Seal:

Liquid Mounted Resilient Seal

_____ Primary Seal Only
_____ With Rim-Mounted Secondary Seal

Vapor Mounted Resilient Seal

_____ Primary Seal Only
_____ With Rim-Mounted Secondary Seal

2. Number of Roof Columns: _____
3. Length of Deck Seam _____ feet:
4. Area of Deck: _____ feet^2
5. Effective Column Diameter: _____ feet
6. Check the Type of Tank:

_____ Bolted with Column Supported Roof
_____ Welded with Column Supported Roof
_____ Bolted with Self-Supported Roof
_____ Welded with Self-Supported Roof

5. Emissions Summary

	HAPs	VOCs		HAPs	VOCs	
1. Breathing Loss:	0.004	0.008	lb/day	.0007	.001	TPY
2. Working Loss:	0.033	0.061	lb/day	.006	.011	TPY
3. Rueping Loss:	0.303	0.559	lb/day	.055	.102	TPY
4. Total Emissions:	0.340	0.628	lb/day	.062	.115	TPY

6. UTM Coordinates:
A. Zone 16 East B. North 1397893.10 C. East 629182.30

NEW SOURCE PERFORMANCE STANDARDS EXEMPTION DETERMINATION

The two new work tanks that KMCC-Columbus would like to install will hold creosote at an approximate temperature of 180 °F or 82.2 °C. The creosote has a vapor pressure at this temperature of between 0.47 and 2.00 kPa as calculated from the information supplied by Allied in Figure 1. The calculations are as follows:

1. Temperature conversion to °K = °C + 273.16 = 82.22 + 273.16 = 355.38 °K;

2. 1/°K = 1/355.38 = 0.002814;

3. From Figure 1, pressure of 3 different creosote mixtures at 180 °F ranges from 3.5 to 15 mm Hg;

4. Convert mm Hg to psia and then to kPa

   - for low volatility creosote

     3.5 mm Hg * 0.01934 psia/mm Hg * kPa/0.14504 psia = 0.467 kPa (low naphthalene)

   - to a maximum for maximum volatility creosote (solution)

     15 mm Hg * 0.01934 psia/mm Hg * kPa/0.14504 psia = 2.00 kPa

     212°F 25 mm Hg 3.33 KPa

5. These tanks are regulated under 40 CFR Part 60, Subpart Kb - Standards of Performance for Volatile Organic Liquid Storage Vessels (Including Petroleum Liquid Storage) for Which Construction, Reconstruction, or Modification Commenced After July 23, 1984.

6. As given in Subpart Kb, 60.110b(c)

   ... vessels with a capacity greater than or equal to 151 m^3 (40,000 gallons) storing a liquid with a maximum true vapor pressure less than 3.5 kPa... are exempt from the general provisions (part 60, subpart A) and from the provisions of this subpart.

7. These tanks are therefore exempt from the 95 percent reduction of emissions required under 60.112b(3)(ii).

8. These are therefore exempt under NSPS requirements.

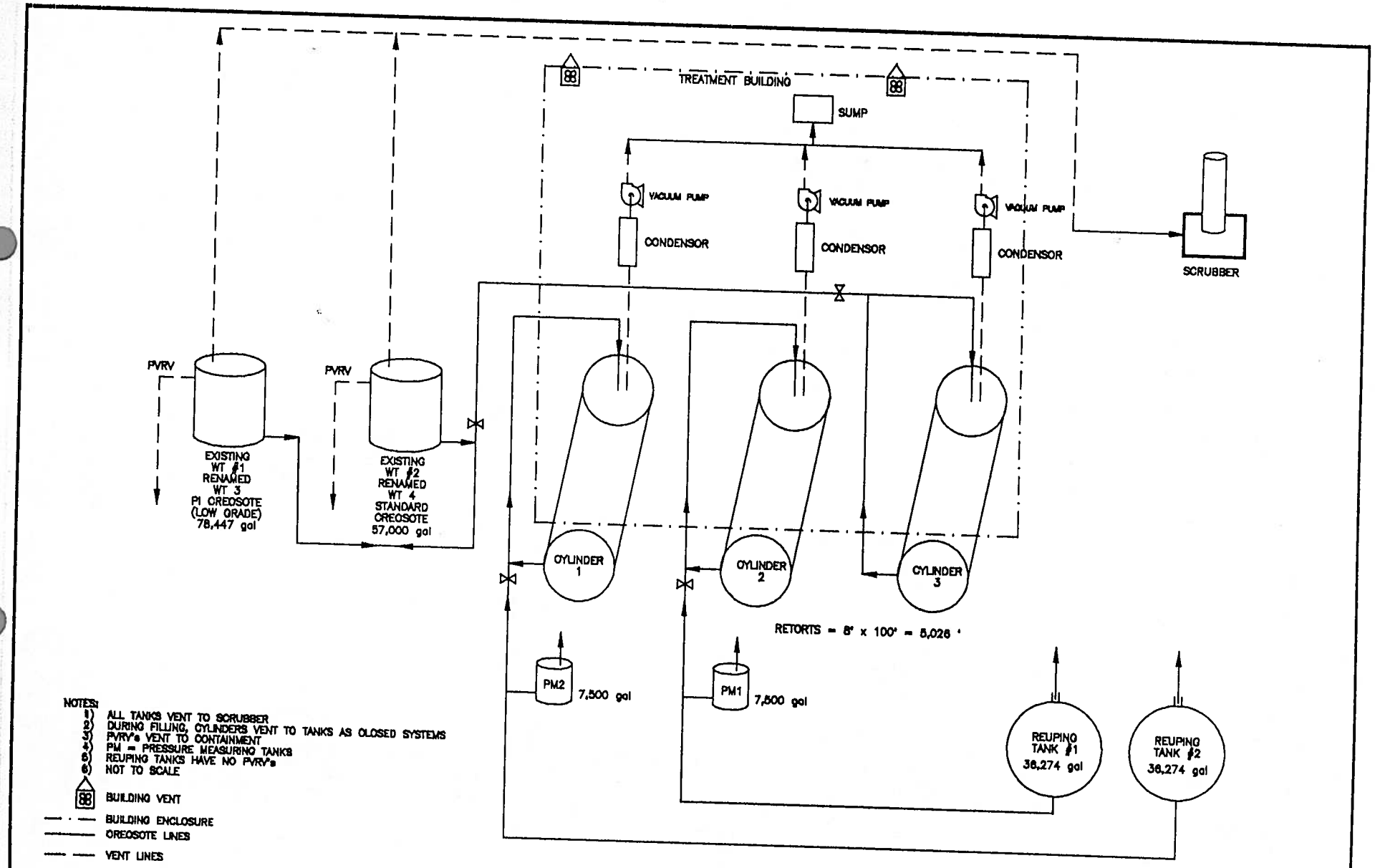

FIGURE 1
PROCESS DIAGRAM – EXISTING TANK SYSTEM
KERR–McGEE CHEMICAL CORP. – COLUMBUS, MISSISSIPPI

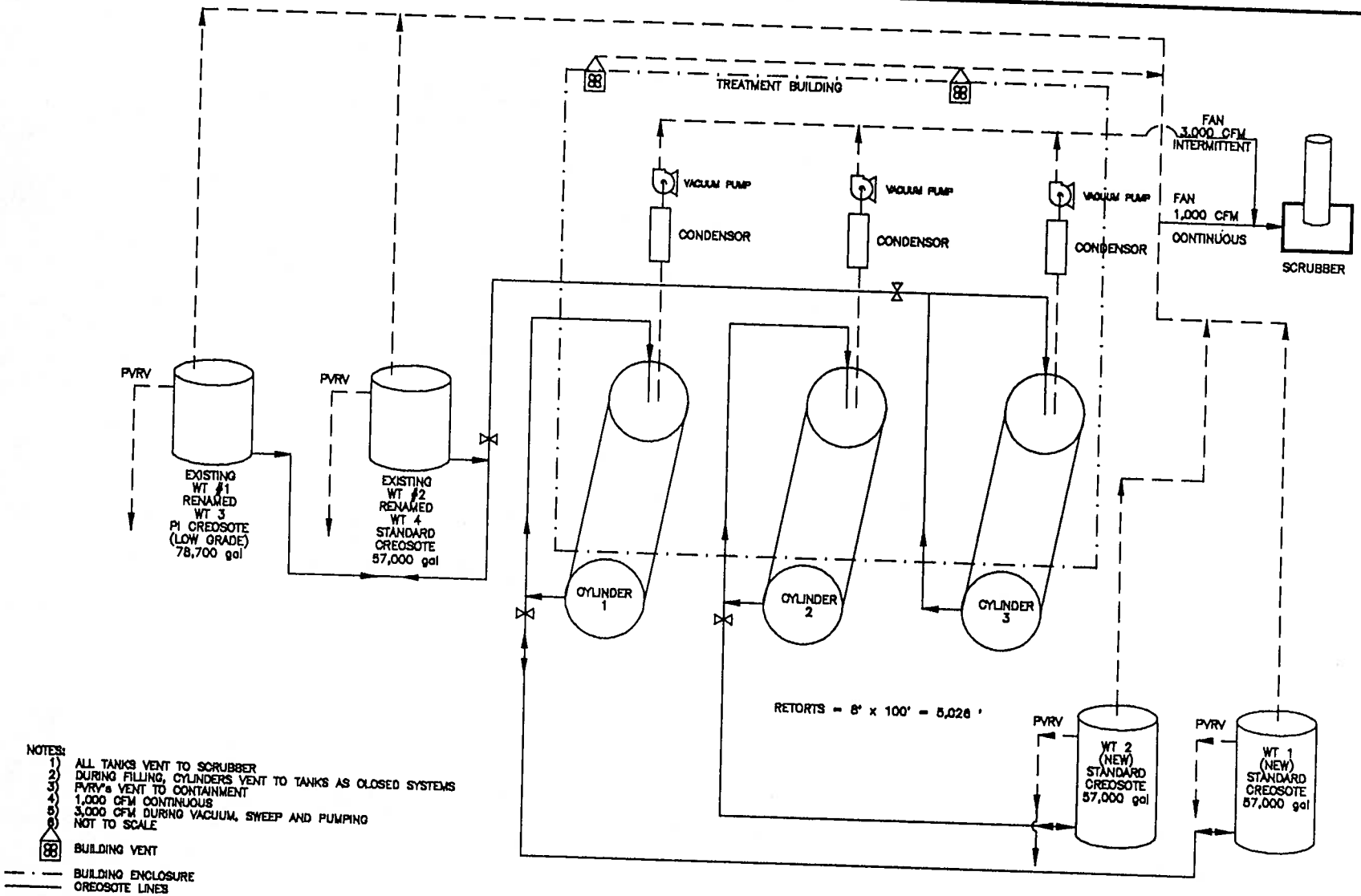

FIGURE 2
PROCESS DIAGRAM – NEW TANK SYSTEM
KERR–McGEE CHEMICAL CORP. – COLUMBUS, MISSISSIPPI

FIGURE 3

Creosote Oils

(Vapor Pressure Plot)

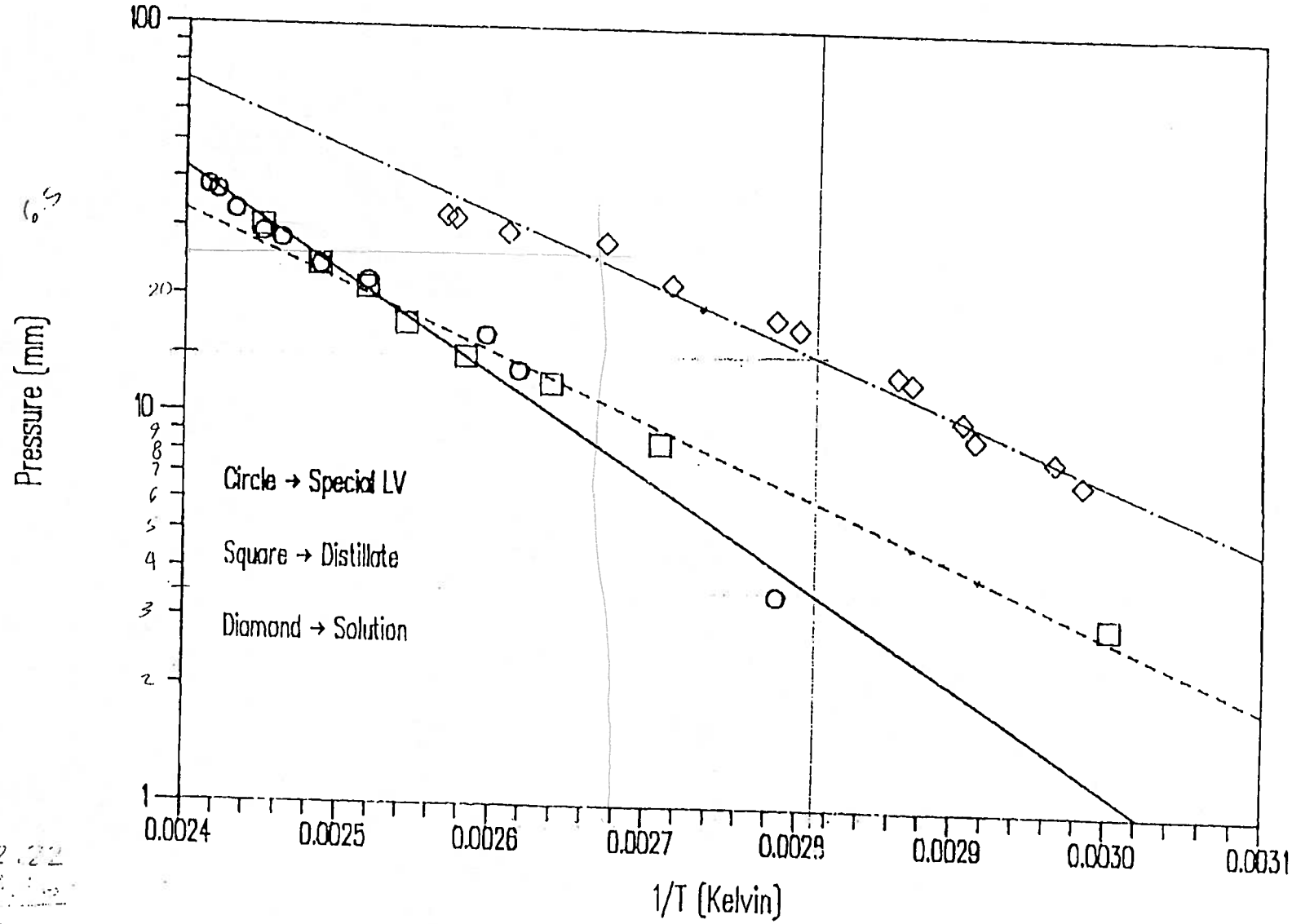

6.5

82.22
273.15
355.38 OK

inverse = 0.00280 1/OK

EXECUTIVE SUMMARY

Kerr-McGee Chemical Corporation (KMCC), Forest Products Division (FPD) operates a wood-treating facility for producing creosote-treated wood products, including railroad crossties, bridge pieces, and crossing pieces at a facility located in Columbus, Mississippi. Major operations at the plant site are summarized in Table E-1. The facility is requesting a Synthetic Minor Operating Permit for operations of the following processes:

1) sawmill activities, which emit particulate matter (PM and PM_{10});

2) boilers, which emit sulfur dioxides (SO_x), nitrous oxides (NO_x), carbon monoxide (CO), volatile organic carbons (VOCs), and PM and PM_{10} (PM of 10 microns or less);

3) wood-treating, which emits VOCs and hazardous air pollutants (HAPs);

4) a tank farm, which emits VOCs and HAPs;

5) a wastewater treatment system, which emits VOCs and HAPs;

6) fugitive emissions, which come from all the above processes plus roadway dust and the black-tie treated-wood storage yard; and

7) insignificant sources, which include any other potential air emission sources onsite.

KMCC currently operates sawmill operations and the boilers under Mississippi Department of Environmental Quality (MDEQ) Air Operating Permit No. 1680-00020. KMCC currently operates cyclones that control PM emissions from the three onsite sawmills, and they use low sulfur fuel for control of emissions from the onsite boilers. The wastewater treatment system tankage is being covered to control emissions and any emissions will be sent through a scrubber. Previously, a new work tank and a scrubber were installed that met the new source performance standards (NSPS) specification for air emission controls of 95% efficiency. The tank was permitted as a new source. Creosote work tanks do not have to meet new source performance standards (NSPS) because this chemical falls below the vapor pressures specified. KMCC is installing a scrubber through which most air streams containing VOCs and HAPs will vent prior to discharge to the atmosphere. The new scrubber and the scrubber on the wastewater treatment facility will meet an efficiency of 75%.

Emission factors have been developed for the KMCC operations across the country based on data collected from seven KMCC facilities, other creosote treaters where the data have been accepted by the U.S. EPA, published emission factors, such as, AP-42 and Synthetic Organic Chemicals Manufacturing Industry (SOCMI) factors, and manufacturers specifications. These emission factors are summarized in Table E-2. Using these emission factors, air emissions from the facility are summarized in Tables E-3 and E-4. Based on the air emission inventory and the factors developed for the KMCC facilities and the Columbus facility, specifically, KMCC is requesting a Synthetic Minor Operating Permit.

SECTION 2

SYNTHETIC MINOR ADDENDUM

STATE OF MISSISSIPPI
DEPT. OF ENVIRONMENTAL QUALITY
OFFICE OF POLLUTION CONTROL
P.O. BOX 10385
JACKSON, MS 39289-0385
(601) 961-5171

APPLICATION ADDENDUM FOR A SYNTHETIC MINOR OPERATING PERMIT

NOTE: This addendum should be affixed to the front of either the Application for Title V Air Pollution Control Permit to Operate Air Emissions Equipment or the Application for Air Pollution Control Permit to Construct and/or Operate Air Emissions Equipment. If the Application for Title V Air Pollution Control Permit to Operate Air Emissions Equipment is used, then Sections M, N, and O of that application do not have to be completed.

A Synthetic Minor Source is defined in Regulation APC-S-2 as: Any facility which would otherwise constitute a major source under Commission Regulation APC-S-6, "Air Emissions Operating Permit Regulations for the Purposes of Title V of the Federal Clean Air Act", except that the owner or operator of the facility elects for federally enforceable emissions limitations which may include permit conditions restricting hours of operation, or type or amount of material stored, combusted or processed, or establishing more stringent air pollution control efficiency requirements to lower allowable emissions for air pollutants in the State Permit to Operate below applicability thresholds for a Title V major source.

Facility Name Kerr McGee Chemical Corporation - Forest Products Division
Facility Number _____
City Columbus **County** Lowndes

Synthetic Minor Operating Permit Application

Treating System Scrubber EP001
Additional Information

The existing treatment of air emissions will be modified during the term of the Synthetic Minor Operating Permit to include a second air scrubber (EP013). The current work tank scrubber (EP001) will handle emissions from the wastewater treatment facility (WWTF). The new scrubber will manage emissions, presently treated by EP001, to include the following processes: Retort and Associated Vacuum System, Four Work Tanks, Hot Tank, Reclaim Tank, Building Sump, and Two Primary Oil/Water Separators. Additional emissions control and reduction will be instituted by covering all units of the WWTF for venting to the WWTF scrubber (EP001). A separate program plans for the removal of three sap tanks. AP-42 factors indicate that emissions from a covered WWTF unit results in a reduction of emissions by a factor of 25 or to 4-percent of the emissions from the uncovered units. The emissions from the scrubbers assume a 75-percent removal efficiency. Emissions from the WWTF will therefore be reduced by 96-percent for covering the units and a further reduction of 75-percent through the scrubber. A schedule for the implementation of this operating scenario is as follows:

- One month for design and cost approval (end of March 1995).
- Three months for delivery following approval (end of June 1995).
- Two months for constructing pipe connections and perform stack testing (beginning of September 1995).
- Three months for contingency - operational January 1996.

The existing scrubber was initially installed to handle emissions from a New Source Performance Standards (NSPS) liquid storage tank. However, previously unavailable data demonstrate that this tank is not subject to NSPS regulations by definition of volatile organic liquid (40 CFR Part 60, Subpart Kb). Specifically, the liquid stored does not meet the vapor pressure requirements of the standards. This information was presented to the State of Mississippi on October 27, 1994 and deemed acceptable. A Construction Permit for this facility is currently being prepared for the construction of two similar work tanks. These tanks will hold creosote at an approximate temperature of 180°F. Creosote has a vapor pressure at this temperature between 0.47 and 2.00 kPa and is therefore exempt from the 95-percent reduction of emissions required by NSPS (40 CFR Part 60, Subpart Kb 60.112b(3)(ii)). It is requested that this NSPS requirement not be reissued in the Synthetic Minor Operating Permit as there are no NSPS units at this site.

A proposed air emission flow diagram is attached here and in the executive summary (Figure 2). Also presented is an emission summary table for both the existing operating scenario and the proposed operating scenario (Table E-3). As the installation of the new scrubber affects the WWTF, the emissions summary for those units is in terms of controlled emissions. Please note this on the table included in the Section E forms. It is further requested, that the Synthetic Minor Operating Permit be written according to the controls being installed in 1995.

KERR-McGEE CHEMICAL CORPORATION
KERR-McGEE CENTER • OKLAHOMA CITY, OKLAHOMA 73125

RECEIVED
OCT - 7 1996
Dept. of Environmental Quality
Office of Pollution Control

October 1, 1996

Mr. Bobby Hall
Mississippi Department of Environmental Quality
Air Permitting Branch
Office of Air Pollution Control
P.O. Box 10385
Jackson, MS 39289-0385

RE: Title V Permit Application, Additional Information Number 2
Kerr-McGee Chemical Corporation, Columbus, Mississippi

Dear Mr. Hall:

As a follow-up to our telephone conversation on September 20, 1996, Kerr-McGee Chemical Corporation (KMCC) is submitting additional information per your request. I have reviewed our files as a first step in gathering the information you have requested relating to the Title V Synthetic Minor Permit Application and subsequent operating permit modification. Apparently after the Title V Permit Application was submitted, subsequent documents provided to the Department modified the original permit application. Therefore, I am providing comments, which I believe will bring the original permit application up to date and allow issuance of a Title V Synthetic Minor Permit for KMCC's Columbus, Mississippi wood preserving plant.

Relevant Submittals

Clean Air Act Title V Operating Permit Application, dated March 8, 1995

Clean Air Act Title V Operating Permit Application Executive Summary, dated March 8, 1995

Application For Air Pollution Control Permit To Construct And Operate Air Emission Equipment (two creosote work tanks), Spring 1995

Additional Information For The Synthetic Minor Operating Permit, November 8, 1995

NSPS Requirements Relating to Air Operating Permit 1680-00020, letter dated December 22, 1995

Modification of Air Emission Control Unit for Permit 1680-00020, letter dated January 20, 1996

Executive Summary Revisions

The narrative summary has been changed to reflect the completion of the covering of wastewater treatment tanks. In addition, a scrubber is in the process of being installed on the wastewater treatment

system and will be operational by October 31, 1996. Figure 2 in Section 2 of the original permit application accurately reflects the wastewater emission control system as of October 31, 1996.

Table E-3 of the "Clean Air Act Title V Operating Permit Application Executive Summary", dated March 8, 1995, has been revised to reflect actual point source emissions. Changes to Table E-3 are described by the following:

- Uncontrolled emissions from the retort and corresponding vacuum system are 8.01 TPY. Controlled emissions from the retort and corresponding vacuum system are 2.0 TPY. These calculations are shown in the Synthetic Minor Addendum, Section 2 of the original permit application.
- Calculations for the work tanks have been revised reflecting installation of the new scrubber system authorized by DEQ approval of the "Application For Air Pollution Control Permit To Construct And Operate Air Emission Equipment". Calculations for the work tanks are shown in the Synthetic Minor Addendum, Section 2 of the original permit application and the "Application For Air Pollution Control Permit To Construct And Operate Air Emission Equipment".
- Creosote storage tanks have been eliminated from Table E-3 since the facility does not operate any creosote storage tanks.
- Sap tanks have been eliminated from Table E-3 since the facility have closed these units and replaced these tanks with the Sap and Vacuum Seal Water Tank.. This Unit has been added to Table E-3.

Table E-4 of the "Clean Air Act Title V Operating Permit Application Executive Summary", dated March 8, 1995, has been revised to reflect appropriate fugitive emission source significant figures. No significant changes occurred in Table E-3.

Page 3.1 of 6 has been added to the executive summary reflecting installation of the wastewater treatment facility scrubber (EP0013).

Clean Air Act Title V Operating Permit Application, Section 2 Revisions
Treating system scrubber tables (EP001) in Section 2 of the original permit application have been revised to reflect installation of the new scrubber system. In addition, a table has been added for the wastewater treatment scrubber (EP013) .

Clean Air Act Title V Operating Permit Application, Section 3C Revisions
Confusion resulted in the actual numbering of the work tanks between the original permit application, the construction permit application and actual numbering at the facility. All tanks have been renumbered to reflect actual numbering in use at the present time. The summary below summarizes the changes:

WT Number	Old WT EU Number	New WT Number	New EU Number
Old Work Tank No. 1	EU004	Work Tank No. 4	EU004
Old Work Tank No. 2	EU005	Work Tank No. 3	EU005
Work Tank No. 3	EU006	Work Tank No. 2	EU006
Work Tank No. 4	EU007	Work Tank No. 1	EU007

All emission unit numbering remains constant. Section 3C work tank forms (SECTION H Forms) have been revised to reflect renumbering of the work tanks.

Framing mill particulate support calculations have been revised. At your request, bin size was evaluated to determine the effect on annual fugitive PM-10 emissions. Bin size did not impact annual fugitive PM-10 emissions. However, during this evaluation is discovered that a 10% AP-42 emission rate rather than the appropriate 1% emission rate specified by AP-42. Both bin size and emission rates have been corrected in the enclosure.

Summary
I believe these revisions address your questions regarding our Title V Synthetic Minor Permit Application. I must confess, that since the original application was submitted and revised by numerous submittals, it is not possible to go to one place and determine emission levels of the various facility sources. Revision of the original application with the enclosed pages should tie the package together.

KMCC greatly appreciate your understanding and cooperation in this matter. We look forward to your visit to the facility on October 7, 1996, at 12:00 p.m. to tour the facility and discuss the drafting of the synthetic minor permit. We understand operational controls will be required and we are eager to discuss the various options with you.

In the interim, should you have questions, please telephone me at (405) 270-2394.

Sincerely,

Kerr-McGee CHEMICAL CORPORATION
FOREST PRODUCTS DIVISION

Nicholas E. Bock
Manager - Environmental Affairs and Regulatory Compliance

Attachments

cc: C. Swann, Facility
S. McCormick, AquAeTer
S. Ladner

Bobby

KERR-McGEE CHEMICAL CORPORATION
KERR-McGEE CENTER • OKLAHOMA CITY, OKLAHOMA 73125

Certified Mail

RECEIVED
JUN 13 1996
Dept. of Environmental Quality
Office of Pollution Control

June 6, 1996

Mr. Bobby Hall
Mississippi Department of Environmental Quality
Air Permitting Branch
Office of Air Pollution Control
P.O. Box 10385
Jackson, MS 39289-0385

RE: Kerr-McGee Chemical Corporation, Columbus Mississippi Wood Preserving Facility
Fees for Annual Air Emissions

Dear Mr. Hall:

As a follow-up to our telephone conversation of June 6, 1996 and your letter to Mr. Tony Helms of May 31, 1996, Kerr-McGee Chemical Corporation (KMCC) wishes to be assessed annual fees for annual air emissions based on actual emissions rather than allowable (potential) emissions. KMCC has submitted a Title V Application which is currently being reviewed by the Department. KMCC estimates of 1995 air emissions are based on protocols used within the Title V Application.

I have provided you with several tables with detail actual emissions from the facility. The following tables show estimates and also the protocols used to make the estimates:

1) Table 1 estimates the emissions from the boiler based on actual fuel usage for 1996. Emission factors are consistent with factors in the Title V Application and were derived from AP-42.

2) Table 2 sums the total facility emissions from the boiler, green wood handling system and wood treating process. Wood dust (cyclone) emitted is based on the actual volume process through the framing mill (238,000 pieces) rather than the PTE volume of 1,300,000 pieces contained in the Title V Application. Both the Switch Tie Unloader and Cross Tie unloaders are based on PTE rather than actual emissions. The source of VOC values from the wood treating process are discussed below.

3) Table 3 lists the source of all emission factors for all operations.

4) The next six pages (pages 3-8) detail the emission estimates of the wood treating process. These spreadsheets were used to complete Form R for 1995. In 1994, Form R was completed based on emission estimate approach used for our Title V Application. These spreadsheets take the base year 1994 and normalize emissions to 1995 based on production levels and additional controls put in place during 1995. For example, fugitive emissions (page 4) is not dependent on production level and therefore did not change between 1994 and 1995. However, pressure vacuum relief valves were installed on creosote tank for three months of the year (page 6) and therefore total VOC emissions were reduced in 1995. Page 7 of the attachment, adjusts 1994 to 1995 levels based on a production index. Emissions are directly proportional to the volume of wood treated. Note that wastewater emissions are not corrected by the production index but were computed using U.S. EPA Water 8 Model. Wastewater emissions do not vary with production level.

I believe these tables will give you the information you need to base KMCC's emissions on actual rather than potential emissions. Should you have any questions please telephone me at (405) 270-2394.

Sincerely,

KERR-McGEE CHEMICAL CORPORATION
FOREST PRODUCTS DIVISION

Nicholas E. Bock
Manager - Environmental Affairs and Regulatory Compliance

Enclosure

cc: Ron Murphey, Facility

MISSISSIPPI DEPARTMENT OF ENVIRONMENTAL QUALITY
MAJOR AIR POLLUTION SOURCE ANNUAL EMISSIONS REPORTING FORM
P.O. BOX 10385
JACKSON, MS 39289-0385

RECEIVED JUN 13 1996 DEQ-OPC

In accordance with Section 49-17-30, Mississippi Code of 1972, as amended, all sources which choose to base their Annual fee on actual emissions shall submit, by July 1 of each year, an inventory of emissions for the previous calendar year.

MDEQ Facility ID #: 1680 - 00020 SIC Code: 2491

Facility Name: Kerr-McGee Chemical Corporation

Site Address: 2300 14th Avenue & 20th Street Nort (Street Location) Columbus (City) MS (State) - (Zip Code)

If actual emissions are reported, they should be the actual emissions that were emitted from the facility during calendar year 1995. The annual permit fee is due on September 1st of each year.

(1) Pollutant	(2) Annual Allowable (Potential) Emission Rate (TPY)	(3) Actual Annual Emission Rate (TPY) See table 2
Particulate Matter (PM)	315.80	9.91
SO2	1,015.28	0.02
NOX	29.07	5.31
CO	7.27	1.33
VOC*	6.31	7.69
TRS	0.00	—
LEAD	0.00	—
CFCs/HCFCs	0.00	—
Other	0.00	—
Total HAPs (Voc)	0.00	—
Total HAPs (Non-Voc)	0.00	—

* Reflects Total VOC from the facility including VOCs that are HAPs.

Attach calculations, monitoring data, measurements, etc. from which actual emission rates were determined. Actual emission rates will not be accepted unless the method of calculation is attached.

I, the undersigned, am the owner or authorized representative of the facility described on this fee form. I certify that the statements and calculations made on this form are complete and accurate to the best of my knowledge.

Nick Beck Mgr Regulatory Affairs — Signature and Title

June 6, 1996 — Date

Table 1

Kerr-McGee Chemical Corporation
Columbus, Mississippi
1995 Annual Emissions Reporting*
Supporting Calculations

RECEIVED
JUN 13 1996
DEQ-OPC

With Natural Gas Firing Cleaver Brooks Boiler (CB D-6 Boiler) Emission Point EP-005							
	Emission Factor** (lb/MMft3)	Annual Fuel Consumption (MMft3)	Max. Firing Rate (MMBTU/hr)	Annual Emissions (lb/yr)	Hours Per Year (hours/yr)	Conversion Factor (lb/ton)	Annual Emissions (Ton/year)
Particulate	2.5	75.8454	34	189.6	8760	2000	0.09
PM-10	2.5	75.8454	34	189.6	8760	2000	0.09
SOx	0.6	75.8454	34	45.5	8760	2000	0.02
NOx	140	75.8454	34	10618.4	8760	2000	5.31
CO	35	75.8454	34	2654.6	8760	2000	1.33
VOC's	2.8	75.8454	34	212.4	8760	2000	0.11

2 Fuel Oil Firing*** Cleaver Brooks Boiler (CB D-6 Boiler) Emission Point EP-005							
	Emission Factor** (lb/1000gal)	Annual Fuel Consumption (Gallons)***	Max. Firing Rate (Gal/hr)	Annual Emissions (lb/yr)	Hours Per Year (hours/yr)	Conversion Factor (lb/ton)	Annual Emissions (Ton/year)
Particulate	2	0	100	0	8760	2000	0.00
PM-10	2	0	100	0	8760	2000	0.00
SOx (.5% Sulfur*141)	71	0	100	0	8760	2000	0.00
NOx	20	0	100	0	8760	2000	0.00
CO	5	0	100	0	8760	2000	0.00
VOC's	0.2	0	100	0	8760	2000	0.00

Annual Boiler Emissions With Natural Gas and #2 Fuel Oil Firing Cleaver Brooks Boiler (CB D-6 Boiler) Emission Point EP-005			
	Annual Emissions (Ton/year) Natural Gas	Annual Emissions (Ton/year) Fuel Oil	Combined 12 Months Operation (Ton/year) (Gas/Oil)
Particulate	0.09	0.00	**0.09**
PM-10	0.09	0.00	**0.09**
SOx	0.02	0.00	**0.02**
NOx	5.31	0.00	**5.31**
CO	1.33	0.00	**1.33**
VOC's	0.11	0.00	**0.11**

* During 1995 the stand-by Vogt boiler was not operated
** All Emission Factors are Base on AP-42 Values
*** During 1995 no fuel oil was burned in any boiler

Table 2

Kerr-McGee Chemical Corporation
Columbus, Mississippi
1995 Annual Emissions Reporting
Facility Emissions

	Facility Emissions Kerr-McGee Chemical Corporation Columbus, MS									
	Total*	Total**	Wood Treating Process							Annual
	Boiler	Cyclones	Fugitive Sources	Vacuum System	Retort Door	Misc. Sumps	Storage Tanks	Reclaim/ Sap Tanks	Wastewater System	
Reference		Title V Application, Volume 1; Normalized for Volume Produced and Additional Controls								(Ton/yr)
	Attached Table1		Form R Page 4	Form R Page 7	Form R Page 7	Form R Page 7	Form R Page 7	Form R Page 7	Form R Page 4	
	(Ton/yr)	(Ton/yr)	(Ton/yr)	(Ton/yr)	(Ton/yr)	(Ton/yr)	(Ton/yr)	(Ton/yr)	(Ton/yr)	
Particulate	0.09	9.82	-	-	-	-	-	-	-	**9.91**
PM-10	0.09	9.82	-	-	-	-	-	-	-	**9.91**
SOx	0.02	-	-	-	-	-	-	-	-	**0.02**
NOx	5.31	-	-	-	-	-	-	-	-	**5.31**
CO	1.33	-	-	-	-	-	-	-	-	**1.33**
VOC's	0.11	-	0.82	3.18	0.90	0.34	0.18	0.77	1.39	**7.69**

* Based on AP-42 and computation shown in Table 1
** Based on values sbumitted in Title V Application and adjusted for actual production levels of 238,000 pieces processed at the Framing Mill and and PTE values at the cross tie unloader and switch tie unloader
*** Based on Title V estimated emissions with PTE corrected to actual emissions corrected for actual volume
These estimates will be reported on Form R. Fugitive emissions are calculated using SOCMI Factors.
See Table 3 for Emission References and factors.

Table 3

SOURCE	REFERENCE	FACTOR	
Primary Boiler	AP-42	Natural Gas	Fuel Oil
		PM - 2.5 lb/1,000 ft3	PM - 2 lb/1,000 gal
		SOx - 0.6 lb/1,000 ft3	SOx - 71 lb/1,000 gal
		CO - 35 lb/1,000 ft3	CO - 5 lb/1,000 gal
		NOx - 140 lb/1,000 ft3	NOx - 20 lb/1,000 gal
		VOCs - 2.8 lb/1,000 ft3	VOCs - 0.2 lb/1,000 gals
Stand-By Secondary Boiler	AP-42	Refer to Primary Boiler	Refer to Primary Boiler
Retort and Corresponding Vacuum System	Test Data	0.021 lb/hr Naphthalene	
Retort Door	Test Data	0.045 lb/hr Naphthalene	
ABI Mill Cyclone	Manufacturers Specifications/Engineering Estimate	90% Efficiency	
Four Mill Cyclone	Manufacturers Specifications/Engineering Estimate	90% Efficiency	
Secondary Oil/Water Separator	USEPA Water 8 Model	Model Input	
Equalization Tank	USEPA Water 8 Model	Model Input	
Biological Treatment	USEPA Water 8 Model	Model Input	
Polishing Tank	USEPA Water 8 Model	Model Input	
Work Tanks (5)	AP-42/USEPA Tanks 2.0 Program	Breathing Loss, Working Loss	
Storage Tanks (6)	AP-42/USEPA Tanks 2.0 Program	Breathing Loss, Working Loss	
Valves	SOCMI/10	0.000057 lb/hr VOC	
Flanges	SOCMI/10	.000183 lb/hr VOC	
Pump Seals	SOCMI/10	0.00472 lb/hr VOC	
Sumps (Process Drains)	AP42	0.01750 lb/hr VOC	
Drip Pad	USEPA Water 8 Model	Model Input	
Tank Farm Containment Field	USEPA Water 8 Model	Model Input	
Black Tie Storage Yard	Test Data/Engineering Estimate	N1(t) = 0.00137e^0.46683t, t<0.25 days	
		N2(t) = 0.00278e^-2.43397t, 0.25<t<1 day	
		N3(t) = 0.00025e^-0.04358t, t>1 day	
Low Volatility Creosote Product Factor (a)	Test Data	0.25	

(a) Based on partial pressures and existing data.

1995 Form R Summary Worksheet
FPD FACILITIES
(DATA USED TO FILL OUT YOUR 1995 FORM R)

DATA DESCRIPTION	1993 FORM R PAGE NUMBER	1993 FORM R LINE NUMBER	1993 FORM R REPORT IN COLUMN	FORM R UNITS APPLIC.	ENTRY CODE REPORTED	FORM R EST. BASIS CODE	Values to Report AVOCA	COL	IND	MAD	SPR	TEX	TDS
Fugitive Emissions (air)	4 OF 9	5.1		lbs/yr		E		1631					
Point Source Emissions (air)	4 OF 9	5.2		lbs/yr		M		13527					
STORMWATER TO STREAM NOT POTW (water)	4 OF 9	5.3.1		lbs/yr		M		111					
Underground Injection	4 OF 9	5.4		No Units				NA					
Landfill (hazardous waste)	4 OF 9	5.5.1		No Units		M		NA					
Land Treatment	4 OF 9	5.5.2		No Units				NA					
Impoundment (water)	4 OF 9	5.5.4		No Units				NA					
Other Disposal	4 OF 9	5.3		No Units				NA					
Receiving Streams (water)	5 OF 9	5.3		No Units				NA					
POTW Transfers (water)	5 OF 9	6.1.A.1		lbs/yr	A or B or C	M		705					
POTW Identification	5 OF 9	6.1.B_		No Units				ID					
Disposal Site Identification	6 of 9	6.2		No Units	A or B or C			ID					
Hazardous waste offsite(soli	6 of 9	.2 TABLE A		lbs/yr	M-72	M		590280					
Other offsite	6 of 9	6.2 OTHERS		No Units				NA					
On Site Treatment-WWT	7 of 9	7.A.1b	b	P11	P11, B11			P11, B11					
On Site Treatment-WWT	7 of 9	7.A.1c	c	No Units	3			3					
On Site Treatment-WWT	7 of 9	7.A.1d	d	No Units	75 OR 95			95					
On Site Treatment-WWT	7 of 9	7.A.1e	e	No Units	YES			YES					
On Site Treatment-AIR	7 of 9	7.A.2b	b	No Units	A03 or F71			AO3					
On Site Treatment-AIR	7 of 9	7.A.2c	c	No Units	2			2					
On Site Treatment-AIR	7 of 9	7.A.2d	d	No Units	75 or99			75					
On Site Treatment-AIR	7 of 9	7.A.2e	e	No Units	YES			YES					
Energy Recovery	8 OF 9	7.B	Box	No Units				NA					
On Site Recylce	8 OF 9	7.C	1	No Units	R99			R99					
Quantity Released 1994 (tota	9 OF 9	8.1	A-1994	lbs/yr	Corrected 94 Value Events were 2x			234953					
***Quantity Released 1995**	9 OF 9	8.1	B-1995	lbs/yr				606255					
Quantity Released 1996(total	9 OF 9	8.1	C-1996	lbs/yr		Your Estimate		Plant Estimate					
Quantity Released 1996(total	9 OF 9	8.1	D-1997	lbs/yr		Your Estimate		Plant Estimate					
Energy Recovery On	9 OF 9	8.2	A-D	lbs/yr				0					
Energy Recovery Off	9 OF 9	8.3	A-D	lbs/yr				0					
Recycled On Site 1994	9 OF 9	8.4	A-1993	lbs/yr				7459771					
Recycled On Site 1995	9 OF 9	8.4	B-1994	lbs/yr				20595635					
Recycled On Site 1996	9 OF 9	8.4	C-1995	lbs/yr		Your Estimate		Plant Estimate					
Recycled On Site1997	9 OF 9	8.4	D-1996	lbs/yr		Your Estimate		Plant Estimate					
Recycled Off Site	9 OF 9	8.5	A-D	lbs/yr				0					
Treated On Site	9 OF 9	8.6	A-D	lbs/yr				0					
Treated Off Site	9 OF 9	8.7	A-D	lbs/yr				0					
One Time Events 1995	9 OF 9	8.8	1994	lbs/yr				0					
Production Index (95/94)	9 OF 9	8.9	1995/1994	No Units				0.93					
Source Reduction Act	9 OF 9	8.1	CODE	No Units	W58			W58/TO4,TO9					

*** Total Quantity Released (8.1) for 1994 were corrected in 1995 Form R. One Time events were added in twice, for some of the plants.**

FUGITIVE EMISSION TABLE
1995 Form R

FUGITIVE SOURCE Valves,flanges & seals	Verified By The Facility	Number of Various Creosote Emission Units						
		AVOCA	COL	IND	MAD	SPR	TEX	TDS
		Number	Number	Number	Number	Number	Number	Number
VALVES			121					
RELIEF VALVES			3					
TK PVRV's (WORK LOSS)			0					
FLANGES			88					
PUMP SEALS			20					

FUGITIVE SOURCE Valves,flanges & seals	EMISSION FACTOR SOURCE	EMISSION FACTOR Lbs/hr	1995 Creosote Emissions Valves/Seals (Lbs/year)						
			AVOCA Lbs/yr	COL Lbs/yr	IND Lbs/yr	MAD Lbs/yr	SPR Lbs/yr	TEX Lbs/yr	TDS Lbs/yr
VALVES	AP-42	5.7E-05		60					
RELIEF VALVES	AP-42	0.02293		603					
TK PVRV's (WORK LOSS	AP-42	0		0					
FLANGES	AP-42	0.000183		141					
PUMP SEALS	AP-42	0.00472		827					
Percent controlled				0%					
UNCONT'D FUGITIVE TOTAL 94				**1631**					
CONTROLLED FUGITIVE TOTAL 94									
UNCONT'D FUGITIVE TOTAL 95			**0**	**1631**	**0**	**0**	**0**	**0**	**0**
CONTROLLED FUGITIVE TOTAL 95			0						

The Avoca incinerator reduces these sources by 50% since retort air is incinerated.

FORM R 1995

POINT SOURCES FROM RETORT

Adjusted For Additional Emission Control Devices

Page 1 0f 3 Point Sources

Creosote Emissions From Point Sources Requiring Correction For Production And Controls						
AVO	COL	IND	MAD	SPR	TEX	TDS
lbs/Yr	lbs/Yr	lbs/Yr	lbs/Yr	lbs/Yr	lbs/Yr	lbs/Yr

Creosote Emissions from Retort and Vacuum System

1994 Creosote Emissions From Retort/Vacuum System		6823					
Controls credited in 1994		0%					
Reported 1994 Creosote Emissions From Retort/Vacuum System		6823					
Controls credited in 1995		0%					
1995 Creosote Emissions From Retort/Vacuum System		**6823**					

Creosote Emissions from Retort Door

1994 Emission From Retort Door (5.917 lbs/hour)		1929					
Controls credited in 1994		0%					
Reported 1994 Emission From Retort Door (5.917 lbs/hour)		1929					
Controls credited in 1995		0%					
1995 Emission From Retort Door (5.917 lbs/hour)		**1929**					

Creosote Emissions from Sumps

(Sumps emissions are not production dependent)

1994 Creosote Emissions From Sumps/Drains (AP42 .007 lbs/hr)		736					
Controls credited in 1994		0%					
Reported 1994 Creosote Emissions From Sumps/Drains		736					
Controls credited in 1995		0%					
1995 Creosote Emissions From Sumps/Drains		**736**					

Retort door emissions were reduced by 50% at Texarkana by reducing door open time from 20 min. to 10 min.
Number of Sumps reduced at Madison from 9 to 4.

FORM R 1995

POINT SOURCES FROM CREOSOTE TANKS
Adjusted For Additional Emission Controls Devices
Page 2 of 3 Point Sources

	Creosote Emissions From Point Sources Requiring Correction For Production And Controls						
	AVO	COL	IND	MAD	SPR	TEX	TDS
	lbs/Yr	lbs/Yr	lbs/Yr	lbs/Yr	lbs/Yr	lbs/Yr	lbs/Yr
Work Tanks							
Uncontrolled Work Tank Breathing Losses		69					
Uncontrolled Work Tank Working Losses		117					
Uncontrolled Work Tank Reuping Losses (Uncontrolled)		1368					
Controls credited in 1994		75%					
1994 Controlled Work Tank Emissions		388					
Controls credited in 1995 (Vent Lines 50% Reduction)		0%					
Controls credited in 1995 (PVRV 80% Reduction)		20%					
Controls credited in 1995 (Vent Tank System 50% Reduction)		0%					
Scrubber/ Incinerator/vent tank as a Control Device 1995		75%					
1995 Controlled Work Tank Emissions		**379**					
Storage Tanks							
Uncontrolled Storage Tank Breathing Losses		NA					
Uncontrolled Storage Tank Working Losses		NA					
Controls credited in 1994		NA					
1994 Controlled Storage Tank Emissions		0					
Controls credited in 1995 (Vent Lines 50% Reduction)		NA					
Controls credited in 1995 (PVRV 80% Reduction)		NA					
Controls credited in 1995 (Vent Tank System 50% Reduction)		NA					
Scrubber/ Incinerator/vent tank as a Control Device 1995							
1995 Controlled Storage Tank Emissions		**0**					
Creosote Reclamation and Sap Tanks							
Reclaim Tank		NA					
Controlled Dehydrator		1170					
Sap Tanks (All were removed during 1995)		485					
Controls credited in 1994		0%					
1994 Controlled Tank Emissions		1655					
Controls credited in 1995 (Vent Lines 50% Reduction)		0%					
Controls credited in 1995 (PVRV 80% Reduction)		0%					
Controls credited in 1995 (Vent Tank System 50% Reduction)		0%					
Scrubber/ Incinerator/vent tank as a Control Device 1995		0%					
1995 Controlled Reclaim/Sap Tank Emissions		**1655**					

Assumptions

Columbus: PVRV's installed on Work Tanks 3/12 months.

FORM R 1995

POINT SOURCES SUMMARY
Adjusted By A Production Index
Page 3 of 3 Point Sources

Columbus feet of rain

Creosote Emissions From Point Sources Requiring Correction For Production And Controls						
AVO	COL	IND	MAD	SPR	TEX	TDS
lbs/Yr	lbs/Yr	lbs/Yr	lbs/Yr	lbs/Yr	lbs/Yr	lbs/Yr

Point Sources

1995 Creosote Emissions From Retort/Vacuum System		**6823**					
1995 Emission From Retort Door (5.917 lbs/hour)		**1929**					
1995 Creosote Emissions From Sumps/Drains		**736**					
1995 Controlled Work Tank Emissions		**379**					
1995 Controlled Storage Tank Emissions		**0**					
1995 Controlled Reclaim/Sap Tank Emissions		**1655**					
1995 Point Sources Requiring Correction		**11522**					
Production Index Calculation							
Total CuFt treated in 1995		2803263					
Total CuFt treated in 1994		3004679					
Production Index in Percent (1995/1994)		93.30%					
1995 Point Sources Corrected BY Production		**10749**					
1995 WWT Sources Not Corrected By Production		**2778**					

1995 Reportable Point Source Emissions (Lbs/yr)							
Total Point Sources For 1994		**14309**					
Total Point Sources For 1995 (Correct Vol+Con't)		**13527**					

Fugitive Sources

1995 Reportable Fugitive Source Emissions (Lbs/yr)							
UNCONTROL'D FUGITIVE TOTAL 94		**1631**					
CONTROLLED FUGITIVE TOTAL 94							
UNCONTROL'D FUGITIVE TOTAL 95		**1631**					
CONTROLLED FUGITIVE TOTAL 95							

1995 Total Reportable Emissions (Lbs/yr)							
Total Creosote Emissions (Point + Fugitive)		15158					

Assumption: Point sources are production dependent and are corrected from base year 1994 by a ratio of 1995/1994 production level.

FORM R 1995

WASTEWATER TREATMENT SYSTEM POINT SOURCES

(No 1995 Correction For Additional Emission Controls Devices)

Creosote Emissions From Point Sources Requiring Correction For Production And Controls						
AVO	COL	IND	MAD	SPR	TEX	TDS
lbs/Yr	lbs/Yr	lbs/Yr	lbs/Yr	lbs/Yr	lbs/Yr	lbs/Yr
WW STORAGE TANK	NA					
POW's	0					
SOW'S	0					
SURGE TANK	0					
EQUALIZATION TANK	NA					
BIOLOGICAL UNIT	0					
POLISHING UNIT	NA					
LIFT STATION	NA					
GW OW SEPARATOR	0					
SCRUB SURGE TANK	0					
REACTION VESSEL	NA					
SOW SUMP TANK	NA					
SEAL WATER TANK	NA					
PERCENT CONTROL	0					
CONTROLLED WASTEWATER EMISSIONS	2778					

In 1996 wastewater treatment system will require correction for covers, equalization lines and vent tanks.

APPENDIX A

Schematic Diagram of Emission Stream Data, Proposed Layout of Packed Tower Specifications and Use

Kerr-McGee Chemical Corporation
Forest Products Division
Columbus, Mississippi Facility

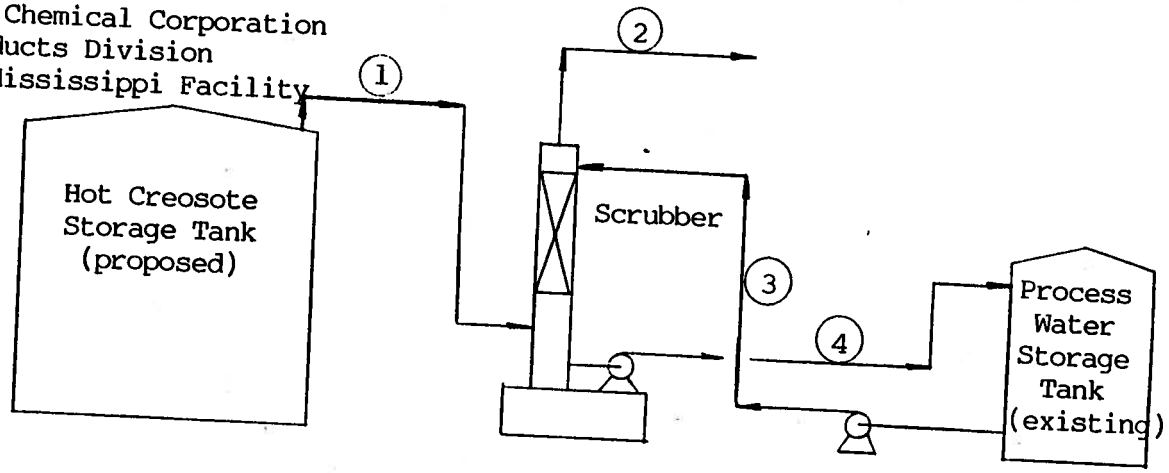

Emission Description	Stream 1	Stream 2	Stream 3	Stream 4
H_2O (lb./hr.)	251.4	7.5	24989	25234
O_2 (lb./hr.)	46.6	46.0	--	--
N_2 (lb./hr.)	179.2	179.2	--	< 1
Hydrocarbon Vapor (lb./hr.)	19.5	creosote 0.8	--	< 1
Creosote (lb./hr.)	--	--	1	20
Total (lb./hr.)	496.7	231.6	24990	25254
HC Vapor Mole. Wt.	123	80	--	--
ACFM	174	55	--	--
Actual GPM	--	--	50.1	50.7
Temp., °F	190	85	85	87
Pressure (psia)	14.6	14.6	6.3	--

APPENDIX A

CR PROPOSAL Customer Inquiry Coal Tar Distillate Fumes R. Ref. [illegible]

CROLL-REYNOLDS PACKED TOWER

TO: Kerr-McGee Corporation

MODEL NO.: 18T-10H
QUANTITY: One (1)
PRICE PER SYSTEM:

F.O.B.:
TERMS: Net 30 ☒

ESTIMATED DELIVERY:
12-14 Weeks after drawing approval
3 Weeks for drawings

☐ ITEM IN STOCK DELIVERY:
____ Weeks after receipt of order

Deliveries are quoted based on standard shop schedules at the time of quote. Special delivery requirements may be accommodated on an individual basis.

COMMENTS:
Since Croll-Reynolds Co. has no control over the mixture or concentration of corrosive elements which may come in contact with the equipment supplied, no guarantee is expressed or implied concerning materials of construction for corrosion resistance.
Customer should make every effort to assure suitability prior to purchase.

Proposal by: Arthur Schlett

Date: 11-19-88

SPECIFICATIONS

DIMENSIONS

Gas Inlet/Outlet 8" / 8"
Scrubbing Liquid Inlet: 1.5"
Tower Diameter: 18" Height: 17'-0"
Liquid Storage: YES ☒ NO ☐ Capacity 20 Gallons
Tank Connections: Drain 2", Fill -, Overflow 2"
Recycle No, Manway No, Removable Top Yes
Separator Type: Mesh Mist Eliminator
Packing Type: Rings Size: 1"

MATERIALS OF CONSTRUCTION

ITEM	MATERIAL
Tower Shell:	"304L" SS or "316L SS" *
Packing:	"316" Stainless Steel
Mist Eliminator:	"304" " "
Liquid Distributor:	"316" " "

*All wetted parts.

APPROXIMATE WEIGHT
Shipping: Operating:

CONSTRUCTION DESIGN

In general accordance with: standard good shop practice.
PS 15-69 ☐ ASME Code ☐ ASME Code Stamped ☐
or vessel designed for pressure/vacuum flooded -
Wall Thicknesses: 1/8"
Head Thicknesses Bottom/Top 1/8" / 1/8"
Hold down lugs Included ☒ Not included ☐
Lifting lugs Included ☐ Not included ☒

OPERATING CONDITIONS

Gas Inlet Rate Capacity: 200 acfm
Gas Inlet Temperature: 200°F
Pressure: 1 Atmosphere
Gas Composition: By Wt. 51.5% H_2O, 9.1% O_2, 35.2% N_2, 4.2% Total Carbon
Liquid Inlet Rate: 30 gpm
Pressure at Liquid Inlet: 6 psig
x Specific Gravity: Approx. 1.05
Liquid Composition: Creasote

Maximum Liquid Temperature: 90°F (Inlet)
Pressure Drop Across System: 1.5 Inch(es) W.G.

TANK INDENTIFICATION NO./NAME

Storage Tanks
A, B, C, D

14. For internal floating roof tanks, Type Seals:	
Liquid mounted resilient seal N/A	
Primary seal only	
With rim mounted secondary seal	
Vapor mounted resilient seal	
Primary seal only	
With rim mounted secondary seal	
Is the roof column supported? If yes, give	
a. Number of columns	
b. Column diameter (inches)	
15. Tank paint color; White, Aluminum (diffuse or specular), Light Gray, Medium Gray, Gray, Other (describe)	Black
16. Tank paint condition: Good or Poor	Good
17. Tank shell condition: Light rust, dense rust, gunite lined	Good
18. Tank seal condition: Good or Poor	Good
19. Date tank installed	1929
20. Tank modifications: Give date and describe	None
21. Is the tank equipped with a vapor recovery system? If yes, describe	No
22. Average wind velocity of the area (miles/hour)	Unk

FACILITY NAME Columbus

FACILITY ADDRESS 14th Avenue & 20th Street

TANK INDENTIFICATION NO./NAME Work Tanks RI, R2

1. Product stored; e.g. crude oil, gasoline, etc.	Creosote
2. True vapor pressure of product at storage temperature (PSIA/°F) @ 100°C	80 MM
3. Reid vapor pressure of product at storage temperature (PSIA/°F)	Unk
4. Density of product stored at storage temperature (lbs/gal)	9.2
5. Molecular weight of product vapor at storage temperature lb/lb mole	Unk
6. Throughput for the year 1985 (gals/year) For both tanks	1,101,200
7. Tank Capacity (gals)	36,274 ea.
8. Tank Diameter (feet) Spherical Tanks	21 ea.
9. Tank Height (feet)	21 ea.
10. Average Vapor Space Height (feet)	5± ea.
11. Tank Construction: Riveted or Welded	Welded
12. Type of Tank:	
Fixed Roof	
Floating Roof: External or Internal	
Variable Vapor Space	Yes
Pressure	Yes
Other, Describe	
13. For external floating roof tanks, Type Seals:	
Metallic shoe seal N/A	
Primary seal only	
With shoe mounted secondary seal	
With rim mounted secondary seal	
Liquid mounted resilient seal	
Primary seal only	
With weather shield	
With rim mounted secondary seal	
Vapor mounted resilient seal	
Primary seal only	
With weather shield	
With rim mounted secondary seal	

TANK INDENTIFICATION NO./NAME

Work Tanks R1, R2

14. For internal floating roof tanks, Type Seals:	
Liquid mounted resilient seal N/A	
Primary seal only	
With rim mounted secondary seal	
Vapor mounted resilient seal	
Primary seal only	
With rim mounted secondary seal	
Is the roof column supported? If yes, give	
a. Number of columns	
b. Column diameter (inches)	
15. Tank paint color; White, Aluminum (diffuse or specular), Light Gray, Medium Gray, Gray, Other (describe)	Black
16. Tank paint condition: Good or Poor	Good
17. Tank shell condition: Light rust, dense rust, gunite lined	Gunite Lined
18. Tank seal condition: Good or Poor	Good
19. Date tank installed	1979
20. Tank modifications: Give date and describe	None
21. Is the tank equipped with a vapor recovery system? If yes, describe	No
22. Average wind velocity of the area (miles/hour)	Unk

FACILITY NAME Columbus

FACILITY ADDRESS 14th Avenue & 20th Street

TANK INDENTIFICATION NO./NAME PM 1 and PM 2

1. Product stored; e.g. crude oil, gasoline, etc.	Creosote
2. True vapor pressure of product at storage temperature (PSIA/°F) @ 100°C	80 MM
3. Reid vapor pressure of product at storage temperature (PSIA/°F)	Unk
4. Density of product stored at storage temperature (lbs/gal)	9.2
5. Molecular weight of product vapor at storage temperature lb/lb mole	Unk
6. Throughput for the year 1985 (gals/year) For both total	1,101,200 Total
7. Tank Capacity (gals)	7,500 ea.
8. Tank Diameter (feet)	8 ea.
9. Tank Height (feet)	20 ea.
10. Average Vapor Space Height (feet)	Variable
11. Tank Construction: Riveted or Welded	Welded
12. Type of Tank:	
Fixed Roof	
Floating Roof: External or Internal	
Variable Vapor Space	X
Pressure	X
Other, Describe	
13. For external floating roof tanks, Type Seals:	
Metallic shoe seal	
Primary seal only N/A	
With shoe mounted secondary seal	
With rim mounted secondary seal	
Liquid mounted resilient seal	
Primary seal only	
With weather shield	
With rim mounted secondary seal	
Vapor mounted resilient seal	
Primary seal only	
With weather shield	
With rim mounted secondary seal	

14. For internal floating roof tanks, Type Seals:	
Liquid mounted resilient seal N/A	
Primary seal only	
With rim mounted secondary seal	
Vapor mounted resilient seal	
Primary seal only	
With rim mounted secondary seal	
Is the roof column supported? If yes, give	
a. Number of columns	
b. Column diameter (inches)	
15. Tank paint color; White, Aluminum (diffuse or specular), Light Gray, Medium Gray, Gray, Other (describe)	Specular Aluminum
16. Tank paint condition: Good or Poor	Good
17. Tank shell condition: Light rust, dense rust, gunite lined	Good
18. Tank seal condition: Good or Poor	Good
19. Date tank installed	1979
20. Tank modifications: Give date and describe	None
21. Is the tank equipped with a vapor recovery system? If yes, describe	No
22. Average wind velocity of the area (miles/hour)	Unk

FACILITY NAME Columbus

FACILITY ADDRESS 14th Avenue & 20th Street

TANK INDENTIFICATION NO./NAME WT-1

1. Product stored; e.g. crude oil, gasoline, etc.	Creosote
2. True vapor pressure of product at storage temperature (PSIA/°F) @ 100°C	80 MM
3. Reid vapor pressure of product at storage temperature (PSIA/°F)	Unk
4. Density of product stored at storage temperature (lbs/gal)	9.2
5. Molecular weight of product vapor at storage temperature lb/lb mole	Unk
6. Throughput for the year 1985 (gals/year)	90,000
7. Tank Capacity (gals)	78,200
8. Tank Diameter (feet)	22
9. Tank Height (feet)	27.5
10. Average Vapor Space Height (feet)	Variable
11. Tank Construction: Riveted or Welded	Riveted
12. Type of Tank:	
Fixed Roof	X
Floating Roof: External or Internal	
Variable Vapor Space	
Pressure	
Other, Describe	
13. For external floating roof tanks, Type Seals:	
Metallic shoe seal N/A	
Primary seal only	
With shoe mounted secondary seal	
With rim mounted secondary seal	
Liquid mounted resilient seal	
Primary seal only	
With weather shield	
With rim mounted secondary seal	
Vapor mounted resilient seal	
Primary seal only	
With weather shield	
With rim mounted secondary seal	

.TANK INDENTIFICATION NO./NAME

14. For internal floating roof tanks, Type Seals:	
Liquid mounted resilient seal N/A	
Primary seal only	
With rim mounted secondary seal	
Vapor mounted resilient seal	
Primary seal only	
With rim mounted secondary seal	
Is the roof column supported? If yes, give	
a. Number of columns	
b. Column diameter (inches)	
15. Tank paint color; White, Aluminum (diffuse or specular), Light Gray, Medium Gray, Gray, Other (describe)	Aluminum
16. Tank paint condition: Good or Poor	Good
17. Tank shell condition: Light rust, dense rust, gunite lined	Good
18. Tank seal condition: Good or Poor	Good
19. Date tank installed	1929
20. Tank modifications: Give date and describe	None
21. Is the tank equipped with a vapor recovery system? If yes, describe	No
22. Average wind velocity of the area (miles/hour)	Unk

FACILITY NAME Columbus

FACILITY ADDRESS 14th Avenue & 20th Street

TANK INDENTIFICATION NO./NAME WT-2

1. Product stored; e.g. crude oil, gasoline, etc.	Creosote
2. True vapor pressure of product at storage temperature (PSIA/°F) @ 100°C	80 MM
3. Reid vapor pressure of product at storage temperature (PSIA/°F)	Unk
4. Density of product stored at storage temperature (lbs/gal)	9.2
5. Molecular weight of product vapor at storage temperature lb/lb mole	Unk
6. Throughput for the year 1985 (gals/year)	60,000
7. Tank Capacity (gals)	47,600
8. Tank Diameter (feet)	18
9. Tank Height (feet)	25
10. Average Vapor Space Height (feet)	Variable
11. Tank Construction: Riveted or Welded	Riveted
12. Type of Tank:	
Fixed Roof	X
Floating Roof: External or Internal	
Variable Vapor Space	
Pressure	
Other, Describe	
13. For external floating roof tanks, Type Seals:	
Metallic shoe seal	N/A
Primary seal only	
With shoe mounted secondary seal	
With rim mounted secondary seal	
Liquid mounted resilient seal	
Primary seal only	
With weather shield	
With rim mounted secondary seal	
Vapor mounted resilient seal	
Primary seal only	
With weather shield	
With rim mounted secondary seal	

.TANK INDENTIFICATION NO./NAME

14. For internal floating roof tanks, Type Seals:	
Liquid mounted resilient seal N/A	
Primary seal only	
With rim mounted secondary seal	
Vapor mounted resilient seal	
Primary seal only	
With rim mounted secondary seal	
Is the roof column supported? If yes, give	
a. Number of columns	
b. Column diameter (inches)	
15. Tank paint color; White, Aluminum (diffuse or specular), Light Gray, Medium Gray, Gray, Other (describe)	Black
16. Tank paint condition: Good or Poor	Good
17. Tank shell condition: Light rust, dense rust, gunite lined	Good
18. Tank seal condition: Good or Poor	Good
19. Date tank installed	1979
20. Tank modifications: Give date and describe	None
21. Is the tank equipped with a vapor recovery system? If yes, describe	No
22. Average wind velocity of the area (miles/hour)	Unk

FACILITY NAME Columbus

FACILITY ADDRESS 14th Avenue & 20th Street

TANK INDENTIFICATION NO./NAME Fuel Tanks (4 tanks)

1. Product stored; e.g. crude oil, gasoline, etc.	#2 Fuel
2. True vapor pressure of product at storage temperature (PSIA/^{o}F)	
3. Reid vapor pressure of product at storage temperature (PSIA/^{o}F)	
4. Density of product stored at storage temperature (lbs/gal)	
5. Molecular weight of product vapor at storage temperature lb/lb mole	
6. Throughput for the year 1985 (gals/year)	12,700 Total
7. Tank Capacity (gals)	25,300 ea.
8. Tank Diameter (feet)	12 ea.
9. Tank Height (feet)	30 ea.
10. Average Vapor Space Height (feet)	Variable
11. Tank Construction: Riveted or Welded	Welded
12. Type of Tank:	
Fixed Roof	X
Floating Roof: External or Internal	
Variable Vapor Space	X
Pressure	
Other, Describe	
13. For external floating roof tanks, Type Seals:	
Metallic shoe seal N/A	
Primary seal only	
With shoe mounted secondary seal	
With rim mounted secondary seal	
Liquid mounted resilient seal	
Primary seal only	
With weather shield	
With rim mounted secondary seal	
Vapor mounted resilient seal	
Primary seal only	
With weather shield	
With rim mounted secondary seal	

14. For internal floating roof tanks, Type Seals:	
Liquid mounted resilient seal N/A	
Primary seal only	
With rim mounted secondary seal	
Vapor mounted resilient seal	
Primary seal only	
With rim mounted secondary seal	
Is the roof column supported? If yes, give	
a. Number of columns	
b. Column diameter (inches)	
15. Tank paint color; White, Aluminum (diffuse or specular), Light Gray, Medium Gray, Gray, Other (describe)	Red
16. Tank paint condition: Good or Poor	Good
17. Tank shell condition: Light rust, dense rust, gunite lined	Good
18. Tank seal condition: Good or Poor	Good
19. Date tank installed	
20. Tank modifications: Give date and describe	None
21. Is the tank equipped with a vapor recovery system? If yes, describe	No
22. Average wind velocity of the area (miles/hour)	Unk

APPENDIX B

Original Application for Construction
of Creosote Storage Tank, Dated
August 12, 1988

STATE OF MISSISSIPPI
DEPARTMENT OF NATURAL RESOURCES
BUREAU OF POLLUTION CONTROL
P.O. BOX 10385
JACKSON, MISSISSIPPI 39209

For Agency Use
FACILITY NUMBER

Date Received

Month Day Year

Kerr-McGee Chemical Corporation
Forest Products Division
Columbus Facility
Operating Permit No. 1680-00020

APPLICATION FOR PERMIT TO CONSTRUCT AND/OR
OPERATE AIR EMISSIONS EQUIPMENT - GENERAL FORM

APPLICATION FOR: X CONSTRUCTION ____ PERMIT RENEWAL - PLEASE CHECK APPROPRIATE BOX

1. Name, Address, Location, and Telephone Number
   A. Name Kerr-McGee Chemical Corporation, Forest Products Division
   B. Mailing Address of Applicant
      1. Street Address or P.O. Box 906
      2. City Columbus 3. State Mississippi
      4. Zip Code 39701 5. Telephone No. (601) 328-7551
   C. Location of Facility
      1. Street 14th Avenue and 20th Street North
      2. City Columbus 3. State MS
      4. Zip Code 39701 5. Telephone No. (601) 328-7551
   D. If the facility is located outside the City limits, please provide a sketch or description showing the approximate location and attach to this application.
2. SIC Code 2491
3. Number of Employees 64
4. Principal Product Creosote treated wood cross ties
5. Principal Raw Materials Creosote, mixed hardwoods
6. Principal Process Rueping pressure process
7. Maximum amount of principal product produced or raw material consumed per day
   14,000 cu. ft. wood treated; 4,000 cross ties; 10,000 gallons creosote
8. (A) Check here if operation which generates air pollutant emissions occurs all y
   or specify the months the operation occurs: Year round operation
   (B) Specify how many days per week the operation occurs: 5 days
   (C) Specify how many hours per day the operation occurs: 8 to 24 hours
9. If this application is for existing facility permit renewal only, has the facility been modified in any way (including production rate, fuel, and/or raw material changes) during period covered by the Operating Permit ____ Yes X No or since 1972? ____ Yes X No
   If Yes, give year(s) in which modification(s) occurred. ____
10. ALL APPLICATIONS MUST BE SIGNED BY THE APPLICANT.

I certify that I am familiar with the information contained in the application and that to the best of my knowledge and belief such information is true, complete, and accurate, and that I am the owner or chief corporate officer, or his designated representative, responsible for complying with air pollution control laws and regulations.

Peter C. Gaskin
Printed Name of Person Signing

Staff, Environmental Control & Regulatory Affairs
Title

August 12, 1988
Date Application Signed

Signature of Applicant

PLEASE COMPLETE FOLLOWING PAGES WHERE APPLICABLE

RECEIVED
AUG 19 1988

ADDITIONAL INFORMATION REQUIRED FOR APPROVAL TO CONSTRUCT

The following additional information must be submitted. Failure to submit any of the additional information or to conform to the instructions will result in initial denial of the application.

1. Site Plan - The drawing or sketch submitted must be to scale and show at least the following:

   A. The property involved and outlines and heights of all buildings. Identify property lines plainly.

   B. Location and identification of all existing or proposed points of discharge of air contaminants to the atmosphere.

   C. Location of streets and all adjacent properties. Show location of all buildings outside the property that are within 150 feet of the equipment involved in the application. Identify all such buildings (as a residence, apartment, warehouse, etc.), specifying number of stories. Indicate north, and prevailing wind direction.

2. Drawings of Equipment (See Note Below) - Supply an assembly drawing, dimensioned and to scale, and plan elevation in as many sections as are needed to show clearly the design and operation of the equipment and the means by which air contaminants are controlled. The following must be shown:

   A. Size and shape of equipment. Show exterior and interior dimensions and features.

   B. Locations, sizes, and shape details of all features which may affect the production, collection, conveying or control of air contaminants of any kind; location, size and shape details concerning all materials handling equipment.

   C. All data and calculations used in selecting or designing the equipment.

   D. Horsepower rating of all motors driving the equipment.

   NOTE: Structural design calculations and details are not required.

ADDITIONAL INFORMATION MAY BE REQUIRED.

3. Description of Process and Control equipment - The application must be accompanied by two copies of a written description of each process to be carried out in the facility and the function of the equipment used in the process. The descriptions must be complete and particular attention must be given to explaining all stages in the process where the discharge of any materials might contribute in any way to air pollution. Control procedures must be described in sufficient detail to show the extent of control of air contaminants anticipated in the design, specifying the expected efficiency of the control devices. All obtainable data must be supplied concerning the nature, volumes, particle size, weights, chemical composition and concentrations of all types of air contaminants.

4. Two copies of a block flow diagram showing the steps of the process and the flow of materials through the process and any control devices must be supplied.

NOTE: THE APPLICATION FORM, SITE PLAN, AND EQUIPMENT MUST BE SIGNED AND STAMPED BY AN ENGINEER REGISTERED IN THE STATE OF MISSISSIPPI.

ADDITIONAL INFORMATION

1. Two copies of construction site plot plan.
2. Two copies of detailed equipment drawings.
3. Two copies of a detailed explanation of the process and control equipment.
4. Two copies of a flow diagram of the of the process or operation showing control devices.

SIGNATURES: If for construction, the application must be submitted in duplicate and both copies should also be signed and stamped by an engineer registered in the State of Mississippi. If application is for Existing Facility or Renewal of Permit to Operate, registered engineer's signature not required. All signatures and stamps must be originals on all copies, not photocopies.

Charles E. Hudnall, P.E.

Miss. Registered P.E. 3350
TYPED NAME & MISSISSIPPI REGISTRATION NUMBER

Charles E. Hudnall
SIGNATURE OF ENGINEER REGISTERED IN MISSISSIPPI

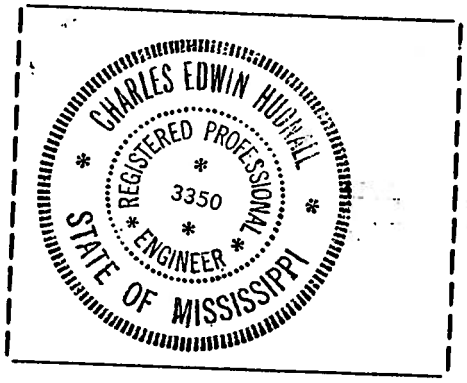

Seal of Engineer
Registered in Mississippi

FACILITY NAME Kerr-McGee Chemical Corporation

FACILITY ADDRESS Columbus Facility

TANK INDENTIFICATION NO./NAME Storage Tank No. 2

*New welded tank to replace old riveted tank. Same capacity and use.

1. Product stored; e.g. crude oil, gasoline, etc.	creosote
2. True vapor pressure of product at storage temperature (PSIA/°F)	1.45
3. Reid vapor pressure of product at storage temperature (PSIA/°F)	
4. Density of product stored at storage temperature (lbs/gal)	9.4
5. Molecular weight of product vapor at storage temperature lb/lb mole	130 - 210
6. Throughput for the most recent calendar year (gals/year)	400,000
7. Tank Capacity (gals)	57,000
8. Tank Diameter (feet)	18'
9. Tank Height (feet)	30'
10. Average Vapor Space Height (feet)	4'
11. Tank Construction: Riveted or Welded	Welded
12. Type of Tank:	
Fixed Roof	Fixed roof
Floating Roof: External or Internal	
Variable Vapor Space	
Pressure	
Other, Describe	
13. For external floating roof tanks, Type Seals: N/A	
Metallic shoe seal	
Primary seal only	
With shoe mounted secondary seal	
With rim mounted secondary seal	
Liquid mounted resilient seal	
Primary seal only	
With weather shield	
With rim mounted secondary seal	
Vapor mounted resilient seal	
Primary seal only	
With weather shield	
With rim mounted secondary seal	

TANK INDENTIFICATION NO./NAME — Storage Tank No. 2

14. For internal floating roof tanks, Type Seals: N/A	
Liquid mounted resilient seal	
Primary seal only	
With rim mounted secondary seal	
Vapor mounted resilient seal	
Primary seal only	
With rim mounted secondary seal	
Is the roof column supported? If yes, give	
a. Number of columns	
b. Column diameter (inches)	
15. Tank paint color; White, Aluminum (diffuse or specular), Light Gray, Medium Gray, Gray, Other (describe)	shall be aluminum jacketed
16. Tank paint condition: Good or Poor shall be	primed only
17. Tank shell condition: Light rust, dense rust, gunite lined	shall be sanblasted clean
18. Tank seal condition: Good or Poor	N/A
19. Date tank installed Proposed	August 1988
20. Tank modifications: Give date and describe	N/A
21. Is the tank equipped with a vapor recovery system? If yes, describe	No
22. Average wind velocity of the area (miles/hour)	* 4.6 mi/Hr

* in Southerly to Northerly direction.

INTERNAL FLOATING ROOF TANKS ONLY

TANK INDENTIFICATION NO. Storage Tank No. 2

Deck Fitting Type		No. of Fittings
23. Access hatch	N/A	
Bolted cover, gasketed		
Unbolted cover, gasketed		
Unbolted cover, ungasketed		
24. Automatic gauge float well	N/A	
Bolted cover, gasketed		
Unbolted cover, gasketed		
Unbolted cover, ungasketed		
25. Column well	N/A	
Builtup column-sliding cover, gasketed		
Builtup column-sliding cover, ungasketed		
Pipe column-flexible fabric sleeve seal		
Pipe column-sliding cover, gasketed		
Pipe column-sliding cover, ungasketed		
26. Ladder well	N/A	
Sliding cover, gasketed		
Sliding cover, ungasketed		
27. Roof leg or hanger well	N/A	
Adjustable		
Fixed		
28. Sample pipe or well	N/A	
Slotted pipe-sliding cover, gasketed		
Slotted pipe-sliding cover, ungasketed		
Sample well-slit fabric seal, 10% open area		
29. Stub drain, 1 inch diameter	N/A	
30. Vacuum breaker	N/A	
Weighted mechanical actuation, gasketed		
Weighted mechanical actuation, ungasketed		

DECK CONSTRUCTION for INTERNAL FLOATING ROOF TANKS [for Bolted Decks ONLY]

31. Continuous sheet construction	N/A	
5 ft wide		
6 ft wide		
7 ft wide		
32. Panel construction	N/A	
5 X 7.5 ft rectangular		
5 X 12 ft rectangular		
33. Length of deck seams (feet)	N/A	
34. Area of deck (square feet)	N/A	

FACILITY NAME Kerr-McGee Chemical Corporation

FACILITY ADDRESS [illegible]umbus Facility [illegible]

BULK STORAGE TANKS (LOADING/UNLOADING INFORMATION)

Storage Tank No. 2

New weleded tank to replace old riveted tank.
Same capacity and use.

Item No.	For Most Recent Calendar Year 1987	
1.	Product transferred: crude oil, gasoline, etc.	creosote
2.	Amount transferred (loading), gals/day Daily average	20,000 (est.)
3.	Amount transferred (unloading), gals/day	22,000 (est.)
4.	Amount transferred (pipe line), gals/day	42,000 (est.)
5.	Bulk temperature of the product, °F	100 - 150 F
6.	True vapor pressure of the product at storage temperature, psia	1.45
7.	Reid vapor pressure of the product, psia	
8.	Molecular weight of the product, lb/lb mole	130 - 210
9.	Density of the product at bulk temperature (lbs/gal)	9.1 - 9.4
10.	Type of loading: vessel, barge, truck, other (specify)	Tank Truck and RR Tankcar
11.	Type of filling: submerged, fill pipe Proposed splash filling, bottom filling, other (specify)	Submerged and bottom filling
11a.	If submerged fill is used, what approximate percent is the fill pipe submerged Proposed	100%
12.	Type of service: dedicated service to one product, vapor balance service, other (specify)	Dedicated to one product only; creosote
13.	Is loading/unloading operation equipped with vapor recovery or other pollution control system (specify)	No
14.	Efficiency of vapor collection system	N/A
15.	For ships/barges; The arrival cargo true ullage (feet) prior to dockside discharge	N/A
16.	For ships/barges; compartment condition before cargo discharge: fully loaded or lightered/short-loaded	N/A
17.	For ships; ballast water (gallons)	N/A
18.	For ships/barges; Receiving vessel/tank conditions: Uncleaned, Ballasted, Cleaned, Gas-Freed	N/A
19.	For ships/barges; The previous cargo was: Volatile, Non-Volatile, other (specify)	N/A

MISSISSIPPI DEPARTMENT OF NATURAL RESOURCES
Bureau of Pollution Control
P. O. Box 10385
Jackson, Mississippi 39209
(601) 961-5171

MEMORANDUM

FILE COPY

TO: *Danny S. Jackson*

FROM: *Bobby Whitaker*

RE: *Kerr-McGee, Forest Products* *New Source Construction*
Columbus, Mississippi
Facility No. 1680-00020
Minor/North
For February 14, 1989, Permit Board

DATE: *February 3, 1989*

Kerr-McGee, Forest Products Division, Columbus, Mississippi, has applied for a construction permit for a creosote storage tank at the referenced facility. The tank will be used to charge their wood treating operation.

NSPS regulations apply to this tank. The installation of a wet scrubber will satisfy control requirements for NSPS.

VOC emissions will be 0.8 lb/hr, and less than 0.32 tons/year. Approval for a Construction Permit is recommended.

STATE OF MISSISSIPPI
DEPARTMENT OF NATURAL RESOURCES
BUREAU OF POLLUTION CONTROL
P.O. BOX 10385
JACKSON, MISSISSIPPI 39209

For Agency Use
FACILITY NUMBER
120-1680-00020
Date Received
9 21 88
Month Day Year

Kerr-McGee Chemical Corporation
Forest Products Division
Columbus Facility
Operating Permit No. 1680-00020

APPLICATION FOR PERMIT TO CONSTRUCT AND/OR
OPERATE AIR EMISSIONS EQUIPMENT - GENERAL FORM

APPLICATION FOR: X CONSTRUCTION ____ PERMIT RENEWAL - PLEASE CHECK APPROPRIATE BOX

1. Name, Address, Location, and Telephone Number
   A. Name Kerr-McGee Chemical Corporation, Forest Products Division
   B. Mailing Address of Applicant
      1. Street Address or P.O. Box 906
      2. City Columbus 3. State Mississippi
      4. Zip Code 39701 5. Telephone No. (601) 328-7551
   C. Location of Facility
      1. Street 14th Avenue and 20th Street North
      2. City Columbus 3. State MS
      4. Zip Code 39701 5. Telephone No. (601) 328-7551
   D. If the facility is located outside the City limits, please provide a sketch or description showing the approximate location and attach to this application.
2. SIC Code 2491
3. Number of Employees 64
4. Principal Product Creosote treated wood cross ties
5. Principal Raw Materials Creosote, mixed hardwoods
6. Principal Process Rueping pressure process
7. Maximum amount of principal product produced or raw material consumed per day
   14,000 cu. ft. wood treated; 4,000 cross ties; 10,000 gallons creosote
8. (A) Check here if operation which generates air pollutant emissions occurs all y
   or specify the months the operation occurs: Year round operation
   (B) Specify how many days per week the operation occurs: 5 days
   (C) Specify how many hours per day the operation occurs: 8 to 24 hours
9. If this application is for existing facility permit renewal only, has the facility been modified in any way (including production rate, fuel, and/or raw material changes) during period covered by the Operating Permit ____ Yes X No or since 1972? ____ Yes X No
   If Yes, give year(s) in which modification(s) occurred. ____
10. ALL APPLICATIONS MUST BE SIGNED BY THE APPLICANT.

I certify that I am familiar with the information contained in the application and that to the best of my knowledge and belief such information is true, complete, and accurate, and that I am the owner or chief corporate officer, or his designated representative, responsible for complying with air pollution control laws and regulations.

Peter C. Gaskin
Printed Name of Person Signing

Staff, Environmental Control & Regulatory Affairs
Title

August 12, 1988
Date Application Signed

Signature of Applicant

PLEASE COMPLETE FOLLOWING PAGES WHERE APPLICABLE

KERR-McGEE CHEMICAL CORPORATION
KERR-McGEE CENTER • OKLAHOMA CITY, OKLAHOMA 73125

August 12, 1988

405 270 2395

RECEIVED
AUG 18 1988
Dept. of Natural Resources
Bureau of Pollution Control

Mr. Danny Jackson
Bureau of Pollution Control
P.O. Box 10385
Jackson, MS 39209

Re: Kerr-McGee Chemical Corporation
Forest Products Division
Columbus, MS Facility
Operating Permit 1680-00020

Dear Mr. Jackson:

Please find enclosed the application to construct a creosote storage tank at the Kerr-McGee Chemical Corporation, Forest Products Division (KMCC-FPD), Columbus Facility.

The above ground field erected storage tank will replace one old riveted tank. The new tank will be approximately the same capacity as the old tank, and the use will be the same.

To provide space for the new tank, two additional storage tanks will be removed, one of which is not in service at the present time.

It is estimated that the yearly throughput for the three old tanks being removed is about 600,000 gallons. The throughput of the proposed new tank is estimated to be 400,000 gallons.

KMCC-FPD would appreciate your review and approval of the application to construct at your earliest convenience.

Should you have any questions, please do not hesitate to contact me at (405)270-2395.

Sincerely,

KERR-McGEE CHEMICAL CORPORATION
FOREST PRODUCTS DIVISION

P. C. Gaskin
Staff, Environmental Control &
Regulatory Affairs

PCG:wpc

cc: E. L. Creekmore
Charles E. Hudnall
Consulting Engineer
P. O. Box 2100
Columbus, MS 39704

FOREST PRODUCTS
1541C

FOR ALL APPLICANTS

MANUFACTURING PROCESS OPERATIONS

Page 1

1. Company Name and Address, plus year for which information is given (if existing facility) at top of page. Use data for must recent calendar year available.
2. Reference Number. Use an identifying number for each manufacturing process which emits matter to the air and use the same number on all three pages of this form to identify information for the same operation.
3. Process or Unit Operation Name. Identify the unit or process section for which information is given by name.
4. Rated Process Capacity. Give in tons per hour the maximum rated capacity of the process or unit identified, wet weight.
5. Feed Input. Process rate in wet tons per hour and wet tons per year of materials fed to the operation.
6. Number of Emission Points to Air. Number of stacks, vents, etc., which emit materials to air.
7. Product Output. Product rate in wet tons per hour and wet tons per year from the operation.

Page 2

8. Reference Number. Use same number as on Page 1 of form to identify information for same process or operation.
9. Stack Data (or outlet of air cleaning device).
   Stack Height in feet above ground.
   Stack Inside Diameter in Feet.
   Exit Gas Velocity in feet per second. (SCFM may be used if velocity is not known; specify units as SCFM if used).
   Exit Gas Temperature in degrees F.
10. Air Pollution Control Equipment.
    Manufacturer and Model Number. Nameplate Data.
    Type. Use Table 1, Page 16. If a wet scrubber, give water flow in GPM and water pressure.
    Collection efficiency. Design and actual collection efficiency if known.

Page 3

11. Reference Number. Use same number as on Pages 1 & 2 of form to identify information for same process or operation.
12. Process Emissions. Give in pounds per hour and tons per year the amount of emissions from the process or operation of each of the two pollutant categories so that process rates versus emission rates may be compared with Regulations. Identify the units of measure used.
    Give the basis of the estimates of pollutants emitted (stack tests, material balance, emission factors, etc.)

8. Reference Number. Continue reference numbers from Page 1, using same number to identify information for same unit.

9. Stack Parameters.
   Stack Height in feet from ground.
   Stack Inside Exit Diameter in feet.
   Exit Gas Velocity in feet per second. (SCFM may be used if velocity is not known; specify units as SCFM if used.)
   Exit Gas Temperature in degrees F.

10. Fuel Data
    Fuel Type. Coal, Gas, #2 Oil, #6 Oil, etc.
    Maximum Capacity burned per hour. Gallons, pounds, cubic feet, etc.
    Specify. Average amount burned per year. Gallons, tons, million cubic feet, etc.
    Specify. Heat Content of Fuel. BTU per gallon, pound, cubic foot, etc., Specify.
    Average Percent Sulfur Content.
    Average Percent Ash Content.
    (If percent sulfur and percent ash are not known, list fuel type and supplier's name at bottom of page in spaces provided so that information may be obtained.)

11. Reference Number. Use same numbers as on Pages 1 and 2 to identify information for same unit.

12. Air Pollution Control Equipment.
    Manufacturer and Model Number. Information from nameplate. Type. Use Table 1, Page 16. If a wet scrubber, specify gallons per minute of water flow and water pressure if known. Efficiency. Percent design control on pollutants and actual percent control if known.

13. Emission Rates.
    Specify tons per year of each of the listed pollutants emitted per year.
    Give basis of estimates of pollutants emitted (Material Balance, Stack Tests, Emission Factors, etc.)
    (If unit is a kiln or similar unit in which combustion products and process losses vent through a common stack, emissions may be totaled and listed under process losses).

FILE COPY

September 19, 1988

Lowndes

Mr. P. C. Gaskin
Kerr-McGee Chemical Corporation/
Forest Products Division
Kerr-McGee Center
Oklahoma City, Oklahoma 73125

Dear Mr. Gaskin:

Re: Construction Application
Facility No. 1680-00020
Columbus, Mississippi

The Bureau of Pollution Control has reviewed the application for construction of a new creosote storage tank at the referenced facility.

This construction is apparently subject to New Source Performance Standards (NSPS), Subpart Kb. These regulations require that such a storage tank be equipped with some type of floating roof, or a closed vent system.

To consider permitting a creosote storage tank, new information must be submitted to indicate that the tank will conform to the above cited standards.

Very truly yours,

Bobby V. Whitaker
North Air Emissions Section

BVW:lr

ADDITIONAL INFORMATION REQUIRED FOR APPROVAL TO CONSTRUCT

The following additional information must be submitted. Failure to submit any of the additional information or to conform to the instructions will result in initial denial of the application.

1. Site Plan - The drawing or sketch submitted must be to scale and show at least the following:

   A. The property involved and outlines and heights of all buildings. Identify property lines plainly.

   B. Location and identification of all existing or proposed points of discharge of air contaminants to the atmosphere.

   C. Location of streets and all adjacent properties. Show location of all buildings outside the property that are within 150 feet of the equipment involved in the application. Identify all such buildings (as a residence, apartment, warehouse, etc.), specifying number of stories. Indicate north, and prevailing wind direction.

2. Drawings of Equipment (See Note Below) - Supply an assembly drawing, dimensioned and to scale, and plan elevation in as many sections as are needed to show clearly the design and operation of the equipment and the means by which air contaminants are controlled. The following must be shown:

   A. Size and shape of equipment. Show exterior and interior dimensions and features.

   B. Locations, sizes, and shape details of all features which may affect the production, collection, conveying or control of air contaminants of any kind; location, size and shape details concerning all materials handling equipment.

   C. All data and calculations used in selecting or designing the equipment.

   D. Horsepower rating of all motors driving the equipment.

   NOTE: Structural design calculations and details are not required.

ADDITIONAL INFORMATION MAY BE REQUIRED.

3. Description of Process and Control equipment - The application must be accompanied by two copies of a written description of each process to be carried out in the facility and the function of the equipment used in the process. The descriptions must be complete and particular attention must be given to explaining all stages in the process where the discharge of any materials might contribute in any way to air pollution. Control procedures must be described in sufficient detail to show the extent of control of air contaminants anticipated in the design, specifying the expected efficiency of the control devices. All obtainable data must be supplied concerning the nature, volumes, particle size, weights, chemical composition and concentrations of all types of air contaminants.

4. Two copies of a block flow diagram showing the steps of the process and the flow of materials through the process and any control devices must be supplied.

NOTE: THE APPLICATION FORM, SITE PLAN, AND EQUIPMENT MUST BE SIGNED AND STAMPED BY AN ENGINEER REGISTERED IN THE STATE OF MISSISSIPPI.

ADDITIONAL INFORMATION

1. Two copies of construction site plot plan.

2. Two copies of detailed equipment drawings.

3. Two copies of a detailed explanation of the process and control equipment.

4. Two copies of a flow diagram of the of the process or operation showing control devices.

SIGNATURES: If for construction, the application must be submitted in duplicate and both copies should also be signed and stamped by an engineer registered in the State of Mississippi. If application is for Existing Facility or Renewal of Permit to Operate, registered engineer's signature not required. All signatures and stamps must be originals on all copies, not photocopies.

Charles E. Hudnall, P.E.

Miss. Registered P.E. 3350
TYPED NAME & MISSISSIPPI REGISTRATION NUMBER

Charles E. Hudnall
SIGNATURE OF ENGINEER REGISTERED IN MISSISSIPPI

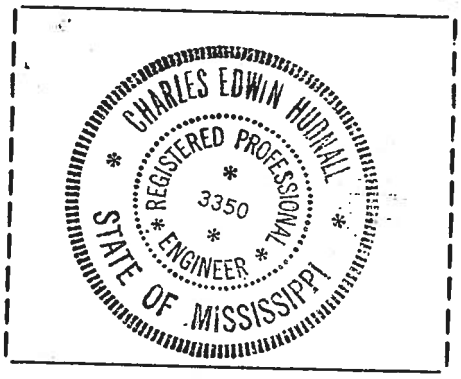

Seal of Engineer
Registered in Mississippi

FACILITY NAME Kerr-McGee Chemical Corporation

FACILITY ADDRESS Columbus Facility

TANK INDENTIFICATION NO./NAME Storage Tank No. 2

*New welded tank to replace old riveted tank. Same capacity and use.

1. Product stored; e.g. crude oil, gasoline, etc.	creosote
2. True vapor pressure of product at storage temperature (PSIA/°F)	1.45 10.0 kPa
3. Reid vapor pressure of product at storage temperature (PSIA/°F)	
4. Density of product stored at storage temperature (lbs/gal)	9.4
5. Molecular weight of product vapor at storage temperature lb/lb mole	130 - 210
6. Throughput for the most recent calendar year (gals/year)	400,000
7. Tank Capacity (gals)	57,000
8. Tank Diameter (feet)	18'
9. Tank Height (feet)	30'
10. Average Vapor Space Height (feet)	4'
11. Tank Construction: Riveted or Welded	Welded
12. Type of Tank:	
Fixed Roof	Fixed roof
Floating Roof: External or Internal	
Variable Vapor Space	
Pressure	
Other, Describe	
13. For external floating roof tanks, Type Seals: N/A	
Metallic shoe seal	
Primary seal only	
With shoe mounted secondary seal	
With rim mounted secondary seal	
Liquid mounted resilient seal	
Primary seal only	
With weather shield	
With rim mounted secondary seal	
Vapor mounted resilient seal	
Primary seal only	
With weather shield	
With rim mounted secondary seal	

TANK INDENTIFICATION NO./NAME — Storage Tank No. 2

14. For internal floating roof tanks, Type Seals: N/A	
Liquid mounted resilient seal	
Primary seal only	
With rim mounted secondary seal	
Vapor mounted resilient seal	
Primary seal only	
With rim mounted secondary seal	
Is the roof column supported? If yes, give	
a. Number of columns	
b. Column diameter (inches)	
15. Tank paint color; White, Aluminum (diffuse or specular), Light Gray, Medium Gray, Gray, Other (describe)	shall be aluminum jacketed
16. Tank paint condition: Good or Poor shall be	primed only
17. Tank shell condition: Light rust, dense rust, gunite lined	shall be sanblasted clean
18. Tank seal condition: Good or Poor	N/A
19. Date tank installed Proposed	August 1988
20. Tank modifications: Give date and describe	N/A
21. Is the tank equipped with a vapor recovery system? If yes, describe	No
22. Average wind velocity of the area (miles/hour)	*4.6 MPH

*in southerly to Northerly direction

INTERNAL FLOATING ROOF TANKS ONLY

TANK INDENTIFICATION NO. Storage Tank No. 2

Deck Fitting Type		No. of Fittings
23. Access hatch	N/A	
Bolted cover, gasketed		
Unbolted cover, gasketed		
Unbolted cover, ungasketed		
24. Automatic gauge float well	N/A	
Bolted cover, gasketed		
Unbolted cover, gasketed		
Unbolted cover, ungasketed		
25. Column well	N/A	
Builtup column-sliding cover, gasketed		
Builtup column-sliding cover, ungasketed		
Pipe column-flexible fabric sleeve seal		
Pipe column-sliding cover, gasketed		
Pipe column-sliding cover, ungasketed		
26. Ladder well	N/A	
Sliding cover, gasketed		
Sliding cover, ungasketed		
27. Roof leg or hanger well	N/A	
Adjustable		
Fixed		
28. Sample pipe or well	N/A	
Slotted pipe-sliding cover, gasketed		
Slotted pipe-sliding cover, ungasketed		
Sample well-slit fabric seal, 10% open area		
29. Stub drain, 1 inch diameter	N/A	
30. Vacuum breaker	N/A	
Weighted mechanical actuation, gasketed		
Weighted mechanical actuation, ungasketed		

DECK CONSTRUCTION for INTERNAL FLOATING ROOF TANKS [for Bolted Decks ONLY]

31. Continuous sheet construction	N/A	
5 ft wide		
6 ft wide		
7 ft wide		
32. Panel construction	N/A	
5 X 7.5 ft rectangular		
5 X 12 ft rectangular		
33. Length of deck seams (feet)	N/A	
34. Area of deck (square feet)	N/A	

FACILITY ADDRESS Columbus Facility

BULK STORAGE TANKS (LOADING/UNLOADING INFORMATION)

Storage Tank No. 2

New weleded tank to replace old riveted tank.
Same capacity and use.

Item No.	For Most Recent Calendar Year 1987	
1.	Product transferred: crude oil, gasoline, etc.	creosote
2.	Amount transferred (loading), gals/day Daily average	20,000 (est.)
3.	Amount transferred (unloading), gals/day	22,000 (est.)
4.	Amount transferred (pipe line), gals/day	42,000 (est.)
5.	Bulk temperature of the product, °F	100 - 150 F
6.	True vapor pressure of the product at storage temperature, psia	1.45
7.	Reid vapor pressure of the product, psia	
8.	Molecular weight of the product, lb/lb mole	130 - 210
9.	Density of the product at bulk temperature (lbs/gal)	9.1 - 9.4
10.	Type of loading: vessel, barge, truck, other (specify)	Tank Truck and RR Tankcar
11.	Type of filling: submerged, fill pipe Proposed splash filling, bottom filling, other (specify)	Submerged and bottom filling
11a.	If submerged fill is used, what approximate percent is the fill pipe submerged Proposed	100%
12.	Type of service: dedicated service to one product, vapor balance service, other (specify)	Dedicated to one product only; creosote
13.	Is loading/unloading operation equipped with vapor recovery or other pollution control system (specify)	No
14.	Efficiency of vapor collection system	N/A
15.	For ships/barges; The arrival cargo true ullage (feet) prior to dockside discharge	N/A
16.	For ships/barges; compartment condition before cargo discharge: fully loaded or lightered/short-loaded	N/A
17.	For ships; ballast water (gallons)	N/A
18.	For ships/barges; Receiving vessel/tank conditions: Uncleaned, Ballasted, Cleaned, Gas-Freed	N/A
19.	For ships/barges; The previous cargo was: Volatile, Non-Volatile, other (specify)	N/A

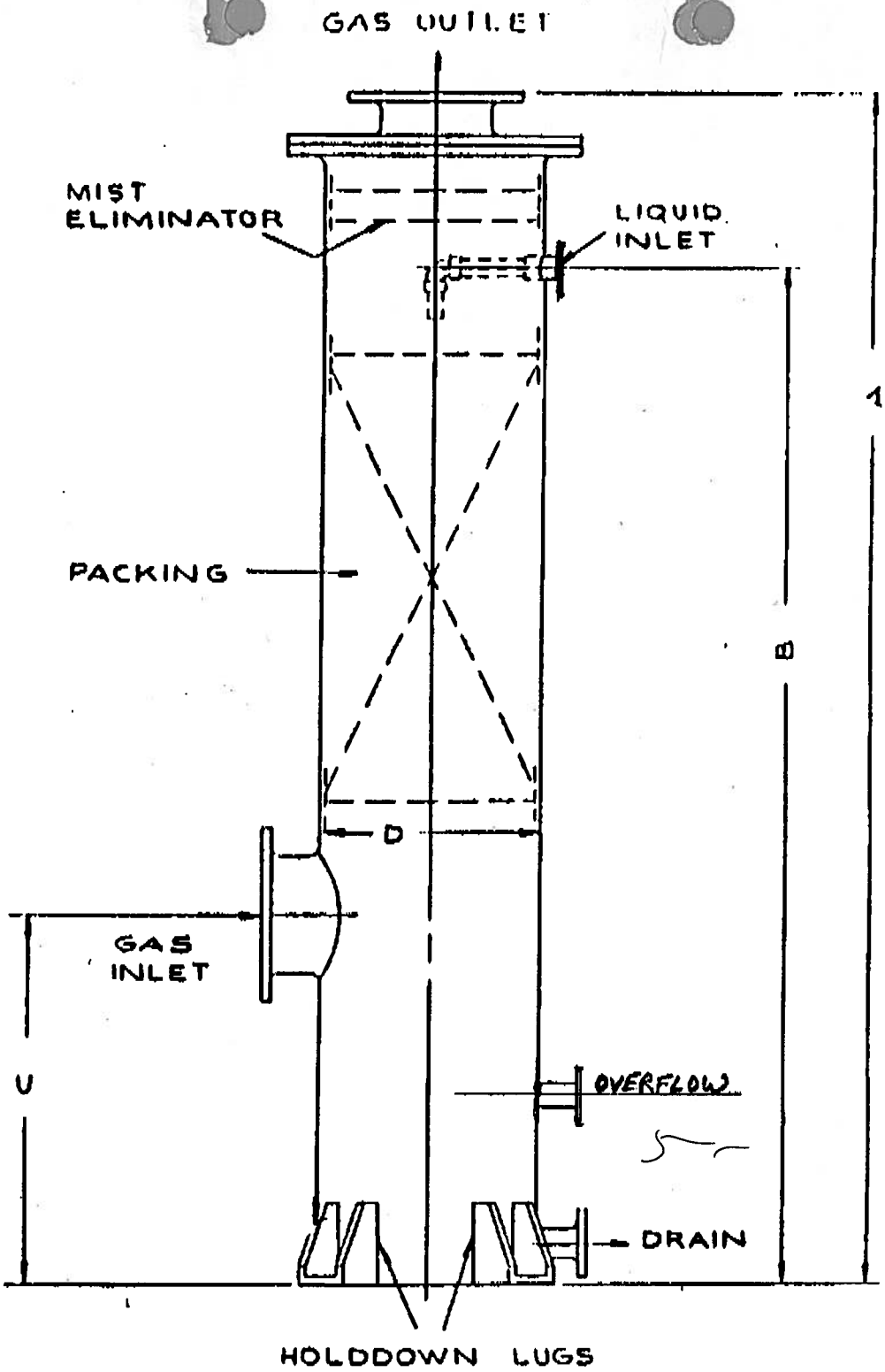

CONNECTIONS	SIZE	LETTER	DIMENSION
GAS INLET	8"	A	17'-0"
GAS OUTLET	8"	B	14'-8"
LIQUID INLET	1½"	C	28"
DRAIN	2"	D	18"
OVERFLOW	2"		

18T-10H

ALL DIMENSIONS ARE APPROXIMATE

CROLL-REYNOLDS COMPANY, INC.
WESTFIELD, N.J.

PROPOSED LAYOUT OF PACKED TOWER
SCALE: NONE

APPENDIX A (continued)

Use of Storage Tank and Packed Tower
Wet Scrubber

The storage tank shall be used as a charging tank or work tank that will temporarily store hot creosote utilized in the pressure treatment of wood crossties.

When a treating cylinder (retort) is charged with a load of crossties, creosote is pumped from the work tank to the treating cylinder to completely fill all voids. The fill pump rate is about 900 gpm, and the pump requires about 20 minutes to completely fill the treating cylinder. The work tank is normally maintained at two-thirds full and after the treating cylinder is filled, the tank has been reduced to about one-third full.

Following pressure treatment of the wood crossties to the required retention of creosote, the creosote is then pumped from the treating cylinder back to the work tank at the same 900 gpm rate.

The packed tower wet scrubber shall be operated during the pump back cycle when the creosote is being pumped from the treating cylinder to the work tank. As the tank fills, the vapor displaced will flow to the packed tower.

The controls for the pump feeding water to the packed tower will be interlocked with the controls for the creosote fill pump, so that the fill pump can only be used when there is water being fed to the packed tower.

APPENDIX E

Manufacturer's Operating Conditions

and

Performance Data for

Packed Tower

APPENDIX E

OPERATING CONDITIONS AND PERFORMANCE DATE

Model No.: 18T-10H Croll-Reynolds Job No.: 67459

I. OPERATING CONDITIONS

A. Gas Inlet Rate Capacity: 200 acfm

B. Gas Inlet Temperature: 200°F

C. Gas Inlet Pressure: 1 atmospheric

D. Gas Composition: by wt: 51.5% H_2, 9.1% O_2, 35.2% N_2
4% total carbon

E. Liquid Inlet Rate:
1. 50 gpm
2. gpm

F. Pressure At Liquid Inlet:
1. 7 psig
x specific gravity:
2. psig
x specific gravity:

G. Liquid Composition:
1. water
2.

H. Maximum Liquid Temperature: 90°F

I. Pressure Drop Across System: 2 Inch(es) W.G.

APPENDIX F

Construction Permit No. 1680-00020

MISSISSIPPI DEPARTMENT OF NATURAL RESOURCES
Bureau of Pollution Control
P.O. Box 10385
Jackson, Mississippi 39289-0385
(601) 961-5171

April 4, 1989

Certified Mail No. P 962 285 440

Mr. Peter C. Gaskin, Environmental Control
Kerr-McGee Chemical Corporation,
Forest Products Division
P.O. Box 906
Columbus, Mississippi 39701

Dear Mr. Gaskin:

Re: Construction Permit No. 1680-00020
Columbus, Mississippi

We have completed our review of the plans and specifications for the above referenced permit and approval is hereby indicated for air pollution control purposes only. Enclosed please find Construction Permit No. 1680-00020 construction of the air emissions equipment and air pollution control equipment.

Prior to startup of the air emissions equipment at this facility, a Performance Evaluation Permit must be obtained from the Permit Board. In order to obtain the Performance Evaluation Permit, it will be necessary to submit certification by a professional engineer registered in the State of Mississippi that construction was completed in accordance with the approved plans and specifications and a written request for the permit.

Any appeal of this permit action must be made within the 30 day period provided for in Section 49-17-29(4)(b) Mississippi Code of 1972.

If you have any questions or if we can be of any service, please let me know.

Very truly yours,

Bobby V. Whitaker
North Air Emissions Section

BVW:sr
Enclosure

RECEIVED
APR 6 1989
KERR-McGEE CORP.
FOREST PRODUCTS DIV.

STATE OF MISSISSIPPI AIR POLLUTION CONTROL PERMIT

TO CONSTRUCT AIR EMISSIONS EQUIPMENT

THIS CERTIFIES THAT

Kerr-McGee Chemical Corporation
Forest Products Division
14th Avenue & 20th Street North
Columbus, Mississippi

has been granted permission to construct air emissions equipment to comply with emission limitations, monitoring requirements and other conditions set forth herein. This permit is issued in accordance with the provisions of the Mississippi Air and Water Pollution Control Law (Section 49-17-1 et. seq., Mississippi Code of 1972), and the regulations and standards adopted and promulgated thereunder.

Issued this 14th day of February, 1989

MISSISSIPPI NATURAL RESOURCES PERMIT BOARD

DIRECTOR, BUREAU OF POLLUTION CONTROL
MISSISSIPPI DEPARTMENT OF NATURAL RESOURCES

Permit No. 1680-00020
Emission Point 004

PART I
GENERAL CONDITIONS

1. The plans, specifications, schedules, dates and other data submitted to the Permit Board are filed with and considered as a part of this permit.

2. All air pollution control facilities shall be designed and constructed such as to allow proper operation and maintenance of this permit.

3. The necessary facilities shall be constructed so that solids removed in the course of control of air emissions may be disposed of in a manner such as to prevent the solids from becoming windborne and to prevent the materials from entering State waters.

4. The air pollution control facilities shall be constructed such that diversion from or bypass of collection and control facilities is not needed except (i) where unavoidable to prevent loss of life or severe property damage or (ii) when approved by the Mississippi Natural Resources Permit Board.

5. The construction of facilities shall be performed in such a manner as to reduce both point source and fugitive dust emissions to a minimum.

6. The permittee shall allow the Mississippi Department of Natural Resources Bureau of Pollution Control and the Mississippi Natural Resources Permit Board and/or their representatives upon presentation of credentials:

   a. To enter upon the permittee's premises where an air emission source is located or in which any records are required to be kept under the terms and conditions of this permit; and

   b. At reasonable times to have access to and copy any records required to be kept under the terms and conditions of this permit; to inspect any monitoring equipment or monitoring method required in this permit; and to sample any air emission.

7. After notice and opportunity for a hearing, this permit may be modified, suspended, or revoked in whole or in part during its term for cause including, but not limited to:

   a. Violation of any terms or conditions of this permit;

   b. Obtaining this permit by misrepresentation or failure to disclose fully all relevant facts, or

   c. A change in any condition that requires either a temporary or permanent reduction or elimination of authorized air emissions.

8. Except for data determined to be confidential under the Mississippi Air & Water Pollution Control Law, all reports prepared in accordance with the terms of this permit shall be available for public inspection at the offices of the Mississippi Department of Natural Resources Bureau of Pollution Control.

9. The issuance of this permit does not convey any property rights in either real or personal property, or any exclusive privileges, nor does it authorize any injury to private property or any invasion of personal rights, nor any infringement of Federal, State or local laws or regulations.

10. Nothing herein contained shall be construed as releasing the permittee from any liability for damage to persons or property by reason of the installation, maintenance, or operation of the air cleaning facility, or from compliance with the applicable statutes of the State, or with local laws, regulations, or ordinances.

11. This permit is non-transferable.

12. This permit is for air pollution control purposes only.

13. Approval to construct will expire should construction not begin within one (1) year of the issuance of this permit, or should construction be suspended for one (1) year or more.

14. This permit shall become void upon completion of construction. The permittee shall furnish the Bureau of Pollution Control written notification of construction completion within 15 days of such date.

15. Prior to startup of air emissions equipment at this source, a Performance Evaluation Permit must be obtained. The permittee shall submit certification by a professional engineer registered in the State of Mississippi that construction completed in accordance with the approved plans and specifications and a written request for the permit.

PART II
EMISSION LIMITATIONS AND MONITORING REQUIREMENTS

Beginning February 14, 1989, the permittee is authorized to construct air emissions equipment for the emission of air contaminants from a 57,000 gallon creosote storage tank, controlled by a scrubber, Emission Point 004.

The air emissions equipment shall be constructed to comply with the emission limitations and monitoring requirements specified below.

EMISSION LIMITATIONS

Volatile Organic Compounds (VOC) 0.8 lb/hr, 3.5 tons/year, and reduction of control equipment inlet VOC by 95% as set forth by 40 CFR 60.112b(a)(3).

REPORTING & RECORDKEEPING

The permittee shall provide notices and reports, and maintain records as required by 40 CFR 60, Section 60.115b.

TESTING & PROCEDURES

The permittee shall demonstrate compliance with the required control efficiency for VOC emissions as required by 40 CFR 60.113b.

PART III
OTHER REQUIREMENTS

(1) The operator of the equipment covered by this permit shall operate and maintain this equipment to assure that the emission rates will not, at any time, exceed the rates allowed by the Mississippi Air Emission Regulations.

(2) The permittee is required to meet all applicable conditions and requirements contained in New-Source Performance Standards (NSPS), Subpart Kb.

(3) The permitted system must be controlled by a closed vent system and scrubber. The closed vent system shall be designed to collect all VOC vapors and gases discharged from the storage vessel and operated with no detectable emissions as indicated by an instrument reading of less than 500 ppm above background. The control device shall be designed and operated to reduce inlet VOC emissions by 95% or greater.

(4) The permittee is allowed to store only creosote in the storage vessel. The amount of creosote stored must be recorded at all times. The maximum true vapor pressure of the stored creosote must be recorded at all times.

APPENDIX G

Inspection Checklist

Daily Shift Log

APPENDIX G

Inspection Checklist
Packed Tower Water Scrubber
Air Emission Control Monitoring
Daily Shift Log

KMCC/FPD Columbus Facility Date _____

Shift _____ Time: _____ Operator _____

1. Equipment Monitoring	Frequency	Reading/Condition	Design Specification
Storage Tank Fittings & P/V Relief Valve	3/Day	_____	Closed
Water Tank	3/Day	_____	N/A
Water Pump	3/Day	_____	N/A
Elec. Controls	3/Day	_____	Interlocked

2. Gas Inlet Flow To Scrubber	Frequency	Reading/Condition	Design Specification
Inlet Flow Rate	3/Week	_____	200 ACFM
Inlet Temp.	3/Day	_____	200°F
Inlet Press.	3/Day	_____	14.6 psia
Press. Drop	3/Day	_____	1.20 oz.

3. Water Inlet Flow To Scrubber	Frequency	Reading/Condition	Design Specification
Inlet Flow Rate	3/Day	_____	50 GPM
Flow Temp.	3/Day	_____	90°F
Inlet Press.	3/Day	_____	7.0 psia
Level in Scrubber	3/Day	_____	18 inches

4. Notes & Comments:
Actions taken/Maintenance or Repair

_____

_____

_____

_____

_____

_____

_____

FILE COPY

Lowndes

June 27, 1989

DATA CODED

Mr. Peter C. Gaskin, Environmental Control
Kerr-McGee Chemical Corporation
P. O. Box 906
Columbus, Mississippi 39701

Dear Mr. Gaskin:

Re: Operating Permit No. 1680-00020
Columbus, Mississippi

This letter is to inform you that the above referenced operating permit has been modified. This modification consists of an extension of this permit through August 1, 1990.

Any appeal of this permit action must be taken in accordance with Section 49-17-29(4)(b) Mississippi Code of 1972.

If you have questions or if we can be of any service, please let me know.

Very truly yours,

Cynthia James
Air Emissions Section

CJ:els

State of Mississippi
Air Pollution Control
PERMIT

TO OPERATE AIR EMISSIONS EQUIPMENT

THIS CERTIFIES THAT

Kerr-McGee Chemical Corporation
Forest Products Division
14th Avenue & 20th Street
Columbus, Mississippi

has been granted permission to operate air emissions equipment in accordance with emission limitations, monitoring requirements and other conditions set forth herein. This permit is issued in accordance with the provisions of the Mississippi Air and Water Pollution Control Law (Section 49-17-1 et. seq., Mississippi Code of 1972), and the regulations and standards adopted and promulgated thereunder.

Issued this 22nd day of July, 19 86

MISSISSIPPI NATURAL RESOURCES PERMIT BOARD

_____

DIRECTOR, BUREAU OF POLLUTION CONTROL
MISSISSIPPI DEPARTMENT OF NATURAL RESOURCES

Expires 1st day of August, 19 89

Permit No. 1680-00020

PART I
GENERAL CONDITIONS

1. All emissions authorized herein shall be consistent with the terms and conditions of this permit. The discharge of any air pollutant identified in this permit more frequently than or at a level in excess of that authorized shall constitute a violation of the permit. Any anticipated facility expansions or modifications which will result in new, different, or increased emission of air pollutants must be reported by submission of a new application.

2. The permittee shall at all times maintain in good working order and operate as efficiently as possible all air pollution control facilities or systems installed or used by the permittee to achieve compliance with the terms and conditions of this permit.

3. Solids removed in the course of control of air emissions shall be disposed of in a manner such as to prevent the solids from becoming windborne and to prevent the materials from entering state waters.

4. Any diversion from or bypass of collection and control facilities is prohibited except (i) where unavoidable to prevent loss of life or severe property damage or (ii) when approved by the Mississippi Department of Natural Resources Bureau of Pollution Control Permit Board.

5. Whenever any emergency, accidental or excessive discharge of air contaminants occurs, the office of the Mississippi Department of Natural Resources Bureau of Pollution Control shall be notified immediately of all information concerning cause of the discharge, point of discharge, volume and characteristics, and whether discharge is continuing or stopped.

6. Should the Executive Director of the Mississippi Department of Natural Resources declare an Air Pollution Emergency Episode, the permittee will be required to operate in accordance with the permittee's previously approved Emissions Reduction Schedule.

7. The permittee shall allow the Mississippi Department of Natural Resources Bureau of Pollution Control and the Mississippi Department of Natural Resources Bureau of Pollution Control Permit Board and/or their authorized representatives, upon the presentation of credentials:

   a. To enter upon the permittee's premises where an air emission source is located or in which any records are required to be kept under the terms and conditions of this permit; and

   b. At reasonable times to have access to and copy any records required to be kept under the terms and conditions of this permit; to inspect any monitoring equipment or monitoring method required in this permit; and to sample any air emission.

8. After notice and opportunity for a hearing, this permit may be modified, suspended, or revoked in whole or in part during its term for cause including, but not limited to:
   a. Violation of any terms or conditions of this permit;
   b. Obtaining this permit by misrepresentation or failure to disclose fully all relevant facts; or
   c. A change in any condition that required either a temporary or permanent reduction or elimination of authorized air emissions.

9. For renewal of this permit the applicant shall make application not less than one-hundred eighty (180) days prior to the expiration date of the permit substantiated with current emissions data, test results or reports or other data as deemed necessary by the Mississippi Department of Natural Resources Bureau of Pollution Control Permit Board.

10. Except for data determined to be confidential under the Mississippi Air and Water Pollution Control Law, all reports prepared in accordance with the terms of this permit shall be available for public inspection at the offices of the Mississippi Department of Natural Resources Bureau of Pollution Control.

11. The issuance of this permit does not convey any property rights in either real or personal property, or any exclusive privileges, nor does it authorize any injury to private property or any invasion of personal rights, nor any infringement of Federal, State or local laws or regulations.

12. Nothing herein contained shall be construed as releasing the permittee from any liability for damage to persons or property by reason of the installation, maintenance, or operation of the air cleaning facility, or from compliance with the applicable statutes of the State, or with local laws, regulations, or ordinances.

13. This permit is non-transferable.

14. This permit is for air pollution control purposes only.

PART II
EMISSION LIMITATIONS AND MONITORING REQUIREMENTS

During the period beginning July 22, 1986, and lasting until August 1, 1989, the permittee is authorized to operate air emissions equipment and emit air contaminants from CB D-6 Boiler, Emission Point 001.

Such emissions shall be limited and monitored by the permittee as specified below:

EMISSION CHARACTERISTIC	EMISSION LIMITATIONS		
	lb/hr	lbs/day	Other units (specify)
Particulate Matter	16.6		
Sulfur Dioxide	163.2		
Opacity			40% Maximum

EMISSION CHARACTERISTIC	MONITORING REQUIREMENTS		
	Measurement Frequency	Sample Type	Reporting Frequency

PART III
OTHER REQUIREMENTS

The operator of the equipment covered by this permit shall operate and maintain this equipment to assure that the emission rates will not, at any time, exceed the rates allowed by the Mississippi Air Emission Regulations.

KERR-McGEE CHEMICAL CORPORATION
KERR-McGEE CENTER • OKLAHOMA CITY, OKLAHOMA 73125

May 1, 1989

RECEIVED
MAY - 4 1989
Dept. of Natural Resources
Bureau of Pollution Control

Certified Mail -
Return Receipt Requested

Mr. Bobby V. Whitaker
North Air Emissions Section
Bureau of Pollution Control
P. O. Box 10385
Jackson, MS 39209

RE: Operating Permit No. 1680-00020
Renewal Application
Kerr-McGee Chemical Corporation
Forest Products Division
Columbus, Mississippi Facility

Dear Mr. Whitaker:

Enclosed is the completed Air Pollution Control Operating Permit Renewal Application for the Kerr-McGee Chemical Corporation, Forest Products Division, Columbus facility. The current permit to operate air emissions equipment expires August 1, 1989.

The permit application to construct a new creosote storage tank and associated packed tower water scrubber, dated 1/11/89, and the BPC approved construction permit is incorporated by reference and attached hereto as information.

Wood refuse as fuel for the Vogt boiler, Ref. No. 002, has been permanently eliminated as a fuel. The Vogt boiler utilizes only natural gas as fuel.

Should you have any questions, please contact Ross Harrod, Plant Superintendent, (601) 328-7551, or me at (405) 270-2395.

Sincerely,

KERR-MCGEE CHEMICAL CORPORATION
FOREST PRODUCTS DIVISION

P. C. Gaskin
Staff, Environmental Control
and Regulatory Affairs

PCG/jlb
enclosure

cc: G. R. Harrod

FOREST PRODUCTS

STATE OF MISSISSIPPI
DEPARTMENT OF NATURAL RESOURCES
BUREAU OF POLLUTION CONTROL
P.O. BOX 10385
JACKSON, MISSISSIPPI 39209

For Agency Use
FACILITY NUMBER
120-1680-00020
Date Received
5-4-89
Month Day Year

APPLICATION FOR PERMIT TO CONSTRUCT AND/OR
OPERATE AIR EMISSIONS EQUIPMENT - GENERAL FORM

APPLICATION FOR: ____ CONSTRUCTION XX PERMIT RENEWAL - PLEASE CHECK APPROPRIATE BOX

DATA CODED

1. Name, Address, Location, and Telephone Number
   A. Name Kerr-McGee Chemical Corporation, Forest Products Division
   B. Mailing Address of Applicant
      1. Street Address or P.O. Box P. O. Box 906
      2. City Columbus 3. State MS
      4. Zip Code 39701 5. Telephone No. 601/328-7551
   C. Location of Facility
      1. Street 14th Avenue and 20th Street North
      2. City Columbus 3. State MS
      4. Zip Code 39701 5. Telephone No. (601) 328-7551
   D. If the facility is located outside the City limits, please provide a sketch or description showing the approximate location and attach to this application.
2. SIC Code 2491
3. Number of Employees 79
4. Principal Product Creosote treated wood railroad cross ties
5. Principal Raw Materials Creosote, mixed hardwoods
6. Principal Process Rueping pressure process
7. Maximum amount of principal product produced or raw material consumed per day
   14,000 cu. ft. wood treated; 4,000 cross ties; 10,000 gals. creosote
8. (A) Check here if operation which generates air pollutant emissions occurs all year ____, or specify the months the operation occurs: Year-round operation
   (B) Specify how many days per week the operation occurs: 5 days
   (C) Specify how many hours per day the operation occurs: 8 to 24 hrs.
9. If this application is for existing facility permit renewal only, has the facility been modified in any way (including production rate, fuel, and/or raw material changes) during period covered by the Operating Permit ____ Yes XX No or since 1972? ____ Yes XX No
   If Yes, give year(s) in which modification(s) occurred. ____
10. ALL APPLICATIONS MUST BE SIGNED BY THE APPLICANT.

I certify that I am familiar with the information contained in the application and that to the best of my knowledge and belief such information is true, complete, and accurate, and that I am the owner or chief corporate officer, or his designated representative, responsible for complying with air pollution control laws and regulations.

Peter C. Gaskin
Printed Name of Person Signing

Staff, Environmental Control
Title

May 1, 1989
Date Application Signed

Signature of Applicant

PLEASE COMPLETE FOLLOWING PAGES WHERE APPLICABLE

FOR ALL APPLICANTS, WHETHER NEW CONSTRUCTION, EXISTING FACILITY, OR RENEWAL

CONTROL EQUIPMENT COVERED UNDER THIS APPLICATION - PLEASE CHECK ALL APPLICABLE AND INDICATE NUMBER OF UNITS.

PARTICULATE EMISSIONS CONTROL EQUIPMENT

1. Cyclone(s) 2
2. Water Scrubber _____
3. Baghouse _____
4. Electrostatic Precipitator _____
5. Venturi Scrubber _____
6. Cyclonic Baghouse _____
7. Cyclonic Scrubber _____
8. Other _____

GASEOUS EMISSIONS CONTROL EQUIPMENT

1. Water Scrubber Packed Tower
2. Activated Carbon Bed _____ Construction Permit application for packed tower incorporated by reference
3. Other _____

WASTE DISPOSAL SYSTEMS

1. Solid Waste Incinerator _____
2. Liquid Waste Incinerator _____
3. Wood or Other Waste Fuel Recovery Boiler _____
4. Gaseous Waste Flare _____
5. Liquid Waste Flare _____
6. Other _____

Pneumatic Conveying System _____

Other (please describe)

FOR ALL APPLICANTS

FUEL BURNING EQUIPMENT
(Except for Refuse Disposal)

This form has 3 pages; each is a continuation of the equipment information from the page before. Please fill in as completely as possible, listing all fuel burning equipment. Reasons should be given explaining any data not filled in.

PAGE 1

1. Fill in company name and address, plus year for which data is given (if existing facility) at top of page. Use data for most recent calendar year available.
2. Reference Number. Use an identifying number for each boiler, furnace, kiln, etc., and use the same reference number on each of the three pages to identify information for the same unit.
3. Manufacturer and Model Number. Nameplate data for boiler, furnace, kiln, etc. Waste gas flares and stationary internal combustion engines should also be included on this form.
4. Rated Capacity in Millions of BTU per hour.
5. Type of Burner Unit. Use Codes (1*) at bottom of form. If not listed put (11) and specify.
6. Usage. Type of fuel burning equipment. Use codes (2*) at bottom of form. If not listed put (5) and specify.
7. Heat Usage. Percent of heat used for process and percent for space heating.

FUEL BURNING EQUIPMENT
(Except for Refuse Disposal)

1 FACILITY NAME	Address	for Agency use Only
Kerr-McGee Chemical Corporation Forest Products Division	14th Avenue and 20th Street Columbus, MS 39701	

FACILITY NUMBER	Information for Calender Year	Date
168-00020-001, 002, 003	19 88	4/20/89

2	3	4	5	6	7	
Reference Number	Manufacturer and Model Number	Rated Capacity 10^6BTU/hr	Type of Burner Unit (use code 1*)	Usage (use code 2*)	Most Usage % Process	Most Usage % Space heat
001	CB Boiler D-6 (Primary)	34	7, 9	1	100	---
002	Vogt 14435 (Standby)	14.3	7	1	100	---

1* BURNER CODES

1. Cyclone furnace
2. Pulverized coal
3. Spreader Stoker
4. Hand fired
5. Other stoker (specify)
6. Multiple port gas
7. Forced draft gas
8. Atomizing Oil (Stove of Air)
9. Atomizing Oil (Mechanical)
10. Rotary Cup Oil
11. Others (specify)

2* USAGE CODES

1. Boiler, Steam
2. Boiler, Other (specify)
3. Air Heating for Space Heating
4. Air Heating for Process Usage
5. Others (specify)

(FOR AGENCY USE ONLY)

FUEL BURNING EQUIPMENT

Reference Number	Stack Parameters				Fuel Type	Fuel Data				
	Stack Height Feet	Inside Exit Dia. Feet	Exit Gas Velocity Feet/Sec.	Exit Gas Temperature Degree F.		Maximum Amount Per Hour (Specify Units)	Amount Per Year (Specify Units)	Heat Content BTU/Gal, etc. (Specify Units)	Percent Sulfur	Percent Ash
001	40	2.50	46	500	Nat. gas	15,000 cu. ft.	40-60,000 MCF	1000/cu. ft.	< 0.2	< 0.05
					#2 Fuel oil (Standby)	100 gals.	Standby	140,000/gal.	< 0.3	< 0.01
002	120	5.0	UNK	575	Nat. gas	12,000 cu. ft.	Standby	1000/cu. ft.	< 0.2	< 0.5

FUEL SUPPLIERS:

Fuel Type	Supplier
Nat. Gas	MS Valley Gas Co.
#2 Fuel Oil	Triangle Refinery

FUEL BURNING EQUIPMENT

(FOR AGENCY USE ONLY)

11	12				13			
Reference Number	Air Pollution Control Equipment				Emissions (Tons/Year)			Basis of Estimate
	Manufacturer and Model Number	Type* (Use Table 1)	Efficiency					
			Design	Actual	Particulate	SO_2	Other (specify)	
001	None used							
002	None used							

*For Wet Scrubber give
Gallons per minute Water
Flow and Water Pressure if known.

MANUFACTURING PROCESS OPERATIONS

Company Name	Address	FOR AGENCY USE
Kerr-McGee Chemical Corporation Forest Products Division	14th Avenue and 20th Street Columbus, MS 39701	

FACILITY NUMBER	Information for Calendar Year	Date
168-00020-001, 002, 003	19 88	4/20/89

Reference Number	Process or Unit Operation Name	Rated Process Capacity Tons/Hour	Feed Input Quantity Per Hour	Feed Input Quantity Per Year	Number of Emission Points To Air	Product Output* tons Quantity Per Hour	Product Output* tons Quantity Per Year
003(a)	cyclone	3	varies according		1	0.18	720
			to production rate				
(b)	cyclone	6	varies according		1	0.27	1080
			to production rate				

*Specify Units of Measure Used

(FOR AGENCY USE ONLY)

MANUFACTURING PROCESS OPERATIONS

Reference Number	Stack Data				Air Pollution Control Equipment			
	Height Feet	Inside Unit Dia. Feet	Exit Gas Velocity Feet/Sec.	Exit Gas Temperature °F	Manufacturer and Model Number	Type* (use Table 1)	Collection Efficiency	
							Design	Actual
003(a)	50	7	11.7	Amb.	D & N Size 12	31	90	85
(b)	40	13	13.3	Amb.	D & N Size 39	31	90	85

*For Wet Scrubbers Give Gallons per minute Water Flow and Water Pressure if known.

MANUFACTURING PROCESS OPERATIONS

(FOR AGENCY USE ONLY)

11	12				
Reference Number	Process Emissions*			Basis for Estimation	(Agency Comments Only)
	Particulates	Sulfur Oxides	Others (Specify by chemical composition)		
003(a)	54 lb./hr.	N/A		Manufacturer's Specifications	
(b)	81 lb./hr.	N/A		Manufacturer's Specifications	

*Please Express Emissions as Tons per Year and Pounds per Hour and Identify Units Being Used.

A

REFUSE DISPOSAL AND INCINERATION

Company Name	Information for Year	(Agency Use Only)
Kerr-McGee Chemical Corporation Forest Products Division	1988	
Address	**Date**	
14th Avenue and 20th Street Columbus, MS 39701	4/20/89	

B

Description of Waste Materials

Type (Describe)	C Maximum Amount Per Day (Pounds)	D Amount Per Year (Tons)	E Method of Disposal 1*
Wood Blocks/chips and dust	25,000	3900	6. Waste Haulers and
Yard/Office refuse	100 (est.)	15.6	Scavengers

If Waste Disposal is by Incineration, Specify the Following:

1. Type of Incinerator:

N/A

single chamber ☐
multiple Chamber ☐
Modified (describe) ☐
Other (describe) ☐

Rotary ☐
Flue Fed ☐

2. Manufacturer's Name: _____
   Model Number _____
   Rated Capacity _____ Pounds / Hour _____ Type Waste
3. Quantity Burned: _____ Pounds / Day
   _____ Tons / Year
4. Operating Schedule _____ Hours / Day
   _____ Days / Year

*1 Disposal Method Codes

1. Open Burning
2. Landfill (No Burning)
3. Incinerator (Complete rest of Form)
4. Conical Burner (TeePee)
5. Burned in Boiler or Furnance
6. Other (Specify)

(AGENCY USE ONLY)

5. Auxiliary Fuel:

N/A

Type	_____
Amount/Year (Specify Units)	_____
Heat Content	_____
Percent Sulfur	_____
Percent Ash	_____
Supplier's Name	_____

6. Pollution Control Equipment:

N/A

Manufacturer	_____
Model Number	_____
% Efficiency	_____
Type	_____
GPM Water Flow (If Wet Scrubber)	_____

7. Stack Data:

N/A

Height	_____	Feet
Inside Exit Diameter	_____	Feet
Exit Gas Velocity	_____	Feet/Sec.
Exit Gas Volume	_____	SCFM
Exit Gas Temp.	_____	^{o}F.

8. Estimated Emissions From Refuse Incineration:

Name: N/A

			Basis of Estimates:
Particulates	_____	Tons/Year	_____
Sulfur Oxides	_____	"	_____

TABLE 1

CODE NUMBERS FOR CONTROL DEVICES

Vapor Control Equipment

00 Group – CONTROL BY COMBUSTION

01 catalytic combustion
02 furnace combustion
03 boiler firebox
04 steam injection flare
05 venturi flare
06 direct flame combustion (afterburner)

10 Group – ADSORBERS

10 activated carbon – nonregenerative
11 activated carbon – regenerative
12 silica gel – nonregenerative
13 silica gel – regenerative
14 lithium chloride
15 activated alumina
16 activated bauxite

20 Group – ABSORBERS

20 sieve plate tower
21 bubble-cap tower
22 packed tower

Particulate Matter – Liquid Mist Control Equipment

30 Group – DRY SEPARATORS AND FILTERS

30 simple cyclones
31 high efficiency cyclones
32 settling chamber
33 simple filters
34 baghouse (shaking)
35 baghouse (reverse jet)
36 dry collector (dynamic)

40 Group – WET COLLECTORS

40 spray chamber – no baffles
41 spray chamber – with baffles
42 wet cyclones – rotoclone
43 wet dynamic precipitator
44 venturi scrubber
45 spray tower (not absorption – scrubbers)
46 packed tower (not absorption – scrubbers)
47 condensors (tube and shell); air
48 barometric condensor with hot wells

50 Group – ELECTRICAL PRECIPITATORS

50 single stage
51 double stage
52 precipitron

60 Group

60 Counteractant

70 Group – SPECIAL

71 Jet exhausters (air dilution)
72 Mist eliminators

80 Group – Other
Specify

APPENDIX H

Performance Evaluation Permit No. 1680-00020

Dated July 11, 1989

ATTACHMENT I

OPERATING PLAN

For Operation and Monitoring of a Creosote Storage Tank

and

Packed Tower Water Scrubber

Introduction

This Operating Plan has been developed to insure the air emissions control device for the creosote storage tank at the Kerr-McGee Chemical Corporation, Forest Products Division (KMCC-FPD), Columbus Facility, will be operated and maintained to achieve the required control efficiency during maximum operating loading conditions.

Use of Storage Tank and Packed Tower Water Scrubber

The tank will be used as a storage tank for creosote utilized in the production process wood preserving system. Appendix A presents the description and use of the storage tank and scrubber.

Operating Instructions for Packed Tower Scrubbers

The manufacturer's operating instructions for the Croll-Reynolds counter-current packed tower is presented in Appendix B.

Description of Storage Tank and Scrubber

The tank, designated Storage Tank No. 2, will store creosote used in the production process wood preserving system. The above ground vertical, cylindrical welded steel tank measures 18' dia. x 30' high. The totally

enclosed fixed roof tank has one 8" vent attached to the scrubber. A pressure-vacuum safety relief valve is attached to the totally enclosed fixed roof to protect the tank structure from rupture due to excessive pressure and vacuum.

The scrubber is a countercurrent packed tower water scrubber designed for using water as the scrubbing liquid. The Model No. 18T-10H scrubber was manufactured by Croll-Reynolds Company in May, 1989, and is 18" dia. x 17' high. Appendix C presents the manufacturer's design specifications and a layout drawing of the packed tower.

Description of Gas Streams

KMCC-FPD employed Aristech Research Laboratory to prepare a computer simulation program using water as the scrubbing medium in a packed tower water scrubber. Aristech Chemical Corporation is a major manufacturer of creosote and is experienced in making these computer simulations. The computer simulation program identified the total volatile organic carbon compounds present in the emissions from the storage tank, and under dynamic conditions quantified the total organic compounds entering and exiting the packed tower water scrubber, and absorbed by the circulating water. Total hydrocarbon vapor in the gas stream entering the water scrubber at an instantaneous rate of 19.5 lbs./hr. is reduced to 0.8 lbs./hr. for a reduction efficiency of 95.9%. The description of the gas stream and material balance using water as the scrubbing medium is presented in Appendix D.

Under periods of static conditions when the level of creosote in the storage tank is at equilibrium, the weight percent of the total hydrocarbons in the vapor head space of the tank, 8" vent line and scrubber system is about 4% when the temperature of the creosote is 190°F. Water vapor accounts for 51% of the total vapor present, and oxygen and nitrogen the remaining 45%.

When its use is anticipated, creosote is maintained at 180° to 212°F. The vapor pressure of creosote at 212° is at a level of about 10.6 kPa, making it a low volatile material. The flow of emissions at static conditions is extremely low and unmeasurable. Since the scrubber is the only vent for emissions from the tank, extremely low levels of volatile organic compounds were detected at the scrubber's outlet. A photoionization detector (PID) recorded levels of 22.4 ppm, 16.5 ppm and 31.0 ppm. Table I, presents the results of the volatile organic emission study conducted in September 1989.

Monitoring Plan

The packed tower water scrubber will be monitored to ensure both it and the storage tank are properly operated and maintained to achieve the required control efficiency during maximum operating loading conditions. Dynamic conditions exist when the storage tank is being filled with creosote at a temperature that will average about 190°F.

As described in Appendix A, the storage tank scrubber will be in operation whenever one or more of the three pumps are transferring creosote to the storage tank. The maximum operating loading condition would be 147 ACFM when all three creosote transfer pumps are operating simultaneously. The operating conditions and performance data provided by the manufacturer of the scrubber is based upon a maximum gas inlet flow rate of 200 ACFM at a temperature of

TABLE I

RESULTS OF VOLATILE ORGANIC EMISSIONS STUDY

TABLE 1
KERR-McGEE CHEMICAL CORPORATION
FOREST PRODUCTS DIVISION
COLUMBUS, MS FACILITY

RESULTS OF VOLATILE ORGANIC EMISSION STUDY
Conducted September 21, 1989

Test Run	Time	Flow Rates		Temperature (°F)			PID Readings (ppm)		Percent Removal
					Scrubber		Scrubber		
		Tank(GPM)	Scrubber(CFM)	Tank	Inlet	Outlet	Inlet	Outlet	
1	0835	0	0	195	N/A	74	N/A	22.4	N/A
2	0850	0	0	194	N/A	82	N/A	16.5	N/A
3	0911	0	0	194	N/A	84	N/A	31.0	N/A
4	1002	1050	140	195	178	85	609	0.0	100
5	1017	800	107	130	176	86	310	1.2	99.6
6	1037	971	130	200	175	85	313	9.0	97.1
7	1514	925	124	204	198	100	312	1.4	99.6
8	1536	822	110	187	174	85	719	36.2	95.0
9	1553	271	36	186	160	85	288	11.7	95.9

200°F. Based upon the manufacturer's operating conditions and performance data, and the results of the computer simulation program, the scrubber will operate well within its operating capacity under maximum loading conditions. Appendix E presents the manufacturer's operating conditions and performance data.

The monitoring program is based upon compliance with the state approved design specifications in the construction permit, and includes the instantaneous monitoring of the packed tower water scrubber during use. Appendix F presents the Inspection Checklist form to record the inspections and values of the parameters that will be monitored in accordance with the Operating Plan. Appendices G and H are the Construction and Performance Evaluation Permits.

TABLE II lists the equipment items to be monitored to ensure that the storage tank and packed tower are operating in conformance with their design. The table lists the equipment, frequency, typical operating condition and design specifications.

TABLE II

AIR EMISSION

MONITORING PROGRAM

TABLE II

AIR EMISSION

MONITORING PROGRAM

Equipment Monitoring	Location	Frequency	Typical Operating Condition	Design Specifications
	Tank fittings	3/Day	Closed/No Leakage	Closed/No Leakage
	Press/Vac Safety Relief Valve	3/Day	Closed/Operational	Closed/Operational
	Water Tank	3/Day	Operational	12" Freeboard
	Water Pump	3/Day	Operational	Operational
	Elec. Controls	3/Day	Interlocked	Interlocked
Scrubber	Inlet Flow Rate	1/Week	140 ACFM	200 ACFM
	Inlet Temp.	3/Day	175°F	200°F
	Inlet Press.	3/Day	14.6 psia	14.6 psia
	Press. Drop	3/Day	1.20 oz.	1.20 oz.
Water Circulation System				
	Inlet Flow Rate	1/Week	50.1 GPM	50 GPM
	Inlet Temp.	3/Day	85°F	90°F
	Min. Inlet Press.	3/Day	12.0 psia	7.0 psia
	Level in Scrubber	3/Day	18 inches	18 inches
	Drain Scrubber	1/Week	---	---

The daily inspection schedule for the air emission and control equipment shall include:

1) The creosote storage tank shall be inspected daily for signs of liquid and air emission leakage. The 8" vent line connecting the storage tank to the packed tower scrubber will likewise be checked.

2) The packed tower scrubber will be inspected daily for air emission leakage from flanged connections, and pipe fittings for circulating water leakage.

3) The tank storing the water supply for the scrubber will be checked daily for optimum volume of water. Freeboard shall be maintained at 12".

4) The scrubber's water circulating pump will be checked daily for lubrication needs and mechanical wear and tear.

5) Interlocked electrical controls for the three creosote transfer pumps will be checked each time any of the pumps are used to ensure that the scrubber's water circulating pump system is in operation.

The parameters to be monitored to ensure that the packed tower is operated in conformance with its design specifications are as follows:

Gas Inlet Flow to Scrubber

1) Gas Inlet Flow Rate - The gas inlet flow rate to the scrubber will be checked once a week for maximum operating loading conditions. The gas inlet flow rate will be measured by timing the storage tank's fill rate in GPM when the large fill pump (1000 GPM cap.) is in operation or in simultaneous operation with one or both of the other two smaller fill pumps. The combined operation of the large fill pump with one or both of the other fill pumps will give a maximum operating loading condition. The gas inlet flow rate design capacity is 200 ACFM.

2) Gas Inlet Temperature - The temperature of the air emissions entering the packed tower will be checked once each shift during operation of the production process system. The maximum gas inlet temperature is 200°F.

3) Gas Inlet Pressure - The gas inlet pressure will be checked once each shift during operation of the system. The manufacturer's maximum gas inlet pressure specification is one (1) atmosphere (14.7 psia).

4) Gas Pressure Drop Across Scrubber - The design pressure drop across the system is 2 inches W.G. (1.2 oz.). The maximum gas inlet pressure and pressure drop across the system will be monitored daily to detect any increases in the pressure drop. Maximum gas inlet pressure will be limited to 6 inches W.G. (3.47 oz.).

Water Inlet Flow to Scrubber

1) Water Inlet Pressure and Flow Rate - The pressure and flow rate of water to the scrubber will be checked once each shift during operation to ensure the pump pipelines and spray nozzle are free of blockage and the required 50 GPM of water at 7 psig is being provided at the spray nozzle.

2) Water Inlet Temperature - The temperature of the water used as the scrubbing medium will be checked each shift. Makeup water will be added to the water storage tank as necessary to stay below the maximum water inlet temperature of 90°F. Water removed from the water storage tank will be drained to the production process water treatment system.

3) Water Level in (Scrubber) Storage Compartment - The water level in the scrubber's storage compartment will be checked daily to assure the water level has not reached a level greater than 18" and is blocking the gas inlet. The water storage compartment will be emptied daily, as necessary, and the water drained to the production process water treatment system.

Recordkeeping and Reporting

The KMCC-FPD, Columbus Facility shall keep a copy of the Operating Plan in file for the life of the source.

The storage tank closed vent system and packed tower water scrubber shall be operated and parameters monitored in accordance with the Operating Plan. A record of the measured values of the parameters shall be maintained in file at the facility for at least 2 years.

The Inspection Checklist Form will be used to record the inspections and values of the parameters that will be monitored in accordance with the Operating Plan.

APPENDIX A

Use of Storage Tank

and

Countercurrent Packed Tower Water Scrubber

APPENDIX A

Use of Storage Tank and Countercurrent Packed Tower Water Scrubber

The tank shall be used as a storage tank that will store creosote utilized in the production process wood preserving system. The average temperature of the creosote will range from ambient to 200°F.

When a wood preserving treating cylinder (retort) is charged with a load of wood products such as crossties, creosote is pumped from the storage tank to the retort to completely fill all voids. The pumping flow rate is about 900 gpm, and the pump requires about 20 minutes to completely fill the retort. The storage tank is normally maintained at two-thirds full and after the retort is filled, the tank has been reduced to about one-third full.

Following pressure treatment of the wood crossties to the required retention of creosote, the creosote is then pumped from the retort back to the storage tank at the same 900 gpm flow rate.

The packed tower water scrubber shall be operated during the pump back cycle when the creosote is being pumped from the retort to the storage tank. As the tank fills, the vapor displaced will flow to the packed tower.

The electrical control for the pump feeding water to the packed tower will be interlocked with the electrical control for the creosote fill pump, so that the fill pump can only be used when there is water being circulated to the packed tower.

Within the production process system there are two additional smaller pumps that will transfer creosote into the storage tank. They are identified as the creosote recycle pump rated at 50 GPM and the tank car unloading pump rated at 150 GPM. The electrical controls for these two pumps will likewise be interlocked with the packed tower water pump system so that the two creosote transfer pump can only be used when there is water being circulated to the packed tower.

APPENDIX B

Manufacturer's Operating Instructions

for Countercurrent Packed Tower Water Scrubber

APPENDIX B

Manufacturer's Operating Instructions for Countercurrent Packed Tower Water Scrubber

The Croll-Reynolds countercurrent packed tower water scrubber consists of custom-designed units where the gas flow is directed upwards through a packed bed while the liquid flow is distributed downwards over the packing. This countercurrent flow assures the highest possible efficiency of gas absorption for a particular application. The height of packing was selected to assure the required efficiency for the particular need.

The basic features of all countercurrent packed towers include a side gas inlet, top gas outlet, packing support grate, packed bed, liquid distributor, and mist eliminator. Materials of construction will vary, but these essential features will always be the same. All wetted parts are stainless steel.

The 316 stainless steel packing support grate is a fixed grating located directly above the gas inlet. It is sufficiently open to allow gas to pass through it without causing excessive pressure drop. All openings are small enough to provide sufficient support for the packing used on this particular application.

A flanged top is included in the unit. This opening can be used for inspection of the liquid distributor as well as installing the packing. The packing is shipped loose in boxes and installed at the site. The method of installation will vary with the particular material being used, but for the

lightweight 316 stainless steel packing, it is simply necessary to dump the boxes of packing directly into the tower. This should continue until the design height as listed in the specification is reached.

Normally, the packing is supplied in increments of 5 or 10 cubic feet per box. Care must be taken that the proper number of feet of height of packing is installed rather than trying to install all the packing. Normally, some excess packing is included with the unit. This excess packing should not be installed in the unit, as it will cause liquid distribution problems.

When installing the metal packing, it is desirable to have the box of packing lowered into the bottom of the unit and then turned over. Dropping stainless steel packing from high elevations may cause distortion of the packing or damage to the support grate.

It is not desirable to shake down or try to reduce the voidage in the packing. Shaking, tamping, or walking on the packing should be avoided.

A 304 stainless steel knitted wire mesh mist eliminator is included as a feature of the packed tower. The mist eliminator is extremely efficient and provides the maximum possible elimination of any mist carryover from the packed tower. This item is installed last.

To operate the tower, it is necessary simply to provide the specified liquid pressure of 7 psig at the spray nozzle and to provide adequate draft for the resistance due to pressure drop through the unit.

Should there be an increase in the pressure drop through the packed tower in excess of 2 inches W.G., check the mist eliminator and packing materials to see if they are plugged with foreign substances. Next check the liquid pressure to the liquid distributor. Since the liquid distributor has a spray nozzle system built into it, if the proper pressure is applied, the flow rate will be correct. Excessive flow rates through the liquid distributor can cause additional pressure drop not accounted for in the design.

Check the liquid level in the storage compartment to assure that it has not reached an excessive height and is blocking the gas inlet. After a Croll-Reynolds packed tower is in operation, it requires very little maintenance and should give excellent service if it is kept clean.

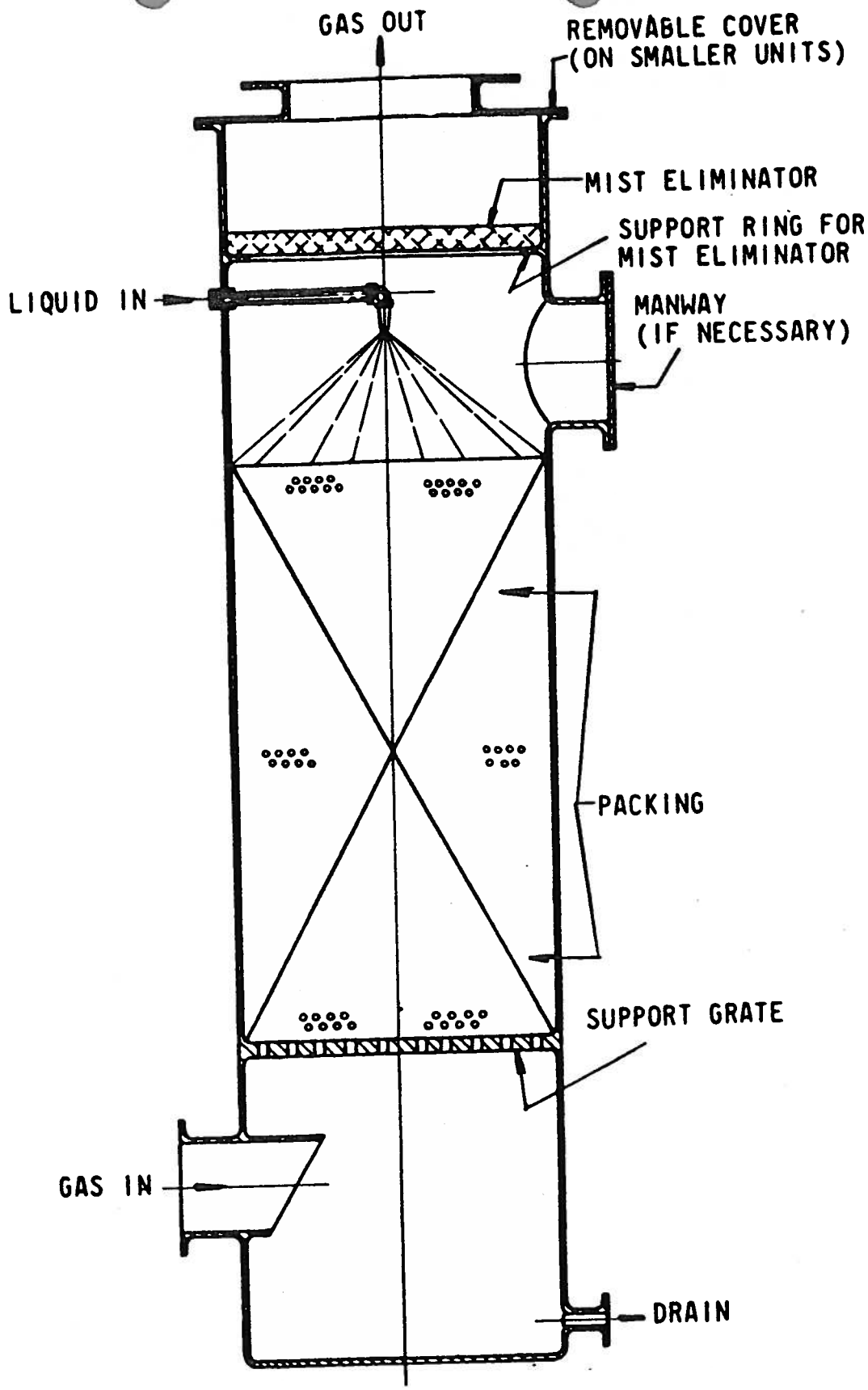
GAS OUT
REMOVABLE COVER
(ON SMALLER UNITS)
MIST ELIMINATOR
SUPPORT RING FOR
MIST ELIMINATOR
LIQUID IN
MANWAY
(IF NECESSARY)
PACKING
SUPPORT GRATE
GAS IN
DRAIN

APPENDIX C

Manufacturer's Design Specifications

and Layout Drawing of the

Croll-Reynolds Model No. 18T-10H

Packed Tower Water Scrubber

CR PROPOSAL Customer Inquiry [illegible] C.R. Ref. [illegible]

CROLL-REYNOLDS PACKED TOWER

TO: Kerr-McGee Corporation

MODEL NO.: 18T-10H
QUANTITY: One (1)
PRICE PER SYSTEM:

F.O.B.:
TERMS: Net 30 ☒

ESTIMATED DELIVERY:
12-14 Weeks after drawing approval
3 Weeks for drawings

☐ ITEM IN STOCK DELIVERY:
_____ Weeks after receipt of order

Deliveries are quoted based on standard shop schedules at the time of quote. Special delivery requirements may be accommodated on an individual basis.

COMMENTS:
Since Croll-Reynolds Co. has no control over the mixture or concentration of corrosive elements which may come in contact with the equipment supplied, no guarantee is expressed or implied concerning materials of construction for corrosion resistance.
Customer should make every effort to assure suitability prior to purchase.

Proposal by: Arthur Schlett

Date: 11-19-88

SPECIFICATIONS

DIMENSIONS

Gas Inlet/Outlet 8" / 8"
Scrubbing Liquid Inlet: 1.5"
Tower Diameter: 18" Height: 17'-0"
Liquid Storage: YES ☒ NO ☐ Capacity 20 Gallons
Tank Connections: Drain 2", Fill -, Overflow 2"
Recycle No, Manway No, Removable Top Yes
Separator Type: Mesh Mist Eliminator
Packing Type: Rings Size: 1"

MATERIALS OF CONSTRUCTION

ITEM	MATERIAL
Tower Shell:	"304L" SS or "316L SS" *
Packing:	"316" Stainless Steel
Mist Eliminator:	"304" " "
Liquid Distributor:	"316" " "

*All wetted parts.

APPROXIMATE WEIGHT
Shipping: 2630 lbs. Operating: 3120 lb.

CONSTRUCTION DESIGN

In general accordance with: standard good shop practice.
PS 15-69 ☐ ASME Code ☐ ASME Code Stamped ☐
or vessel designed for pressure/vacuum flooded -
Wall Thicknesses: 1/8"
Head Thicknesses Bottom/Top 1/8" / 1/8"
Hold down lugs Included ☒ Not included ☐
Lifting lugs Included ☐ Not included ☒

OPERATING CONDITIONS

Gas Inlet Rate Capacity: 200 acfm
Gas Inlet Temperature: 200°F
Pressure: 1 Atmosphere
Gas Composition: By Wt. 51.5% H2O, 9.1% O2, 35.2% N2, 4.2% Total Carbon
Liquid Inlet Rate: 50 gpm
Pressure at Liquid Inlet: 7.0 psig
x Specific Gravity:
Liquid Composition: water
Maximum Liquid Temperature: 90°F (Inlet)
Pressure Drop Across System: 2 Inch(es) W.G.

MARK	SIZE	DESCRIPTION	FLANGE O.D. AND DRILLING	REMARKS
A	8"	GAS INLET	150# ANSI STD.	VAN STONE TYPE FLG.
B	8"	GAS OUTLET	150# ANSI STD.	VAN STONE TYPE FLG.
C	2"	LIQUID INLET	150# ANSI STD.	VAN STONE TYPE FLG.
D	2"	OVERFLOW	150# ANSI STD	VAN STONE TYPE FLG.
E	2"	DRAIN	150# ANSI STD.	VAN STONE TYPE FLG.

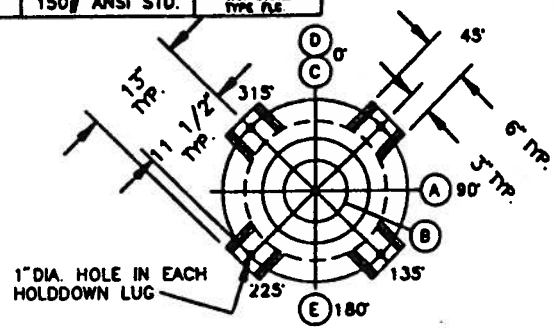

PLAN VIEW SHOWING TRUE ORIENT. OF ALL CONN'S. & HOLDDOWN LUGS

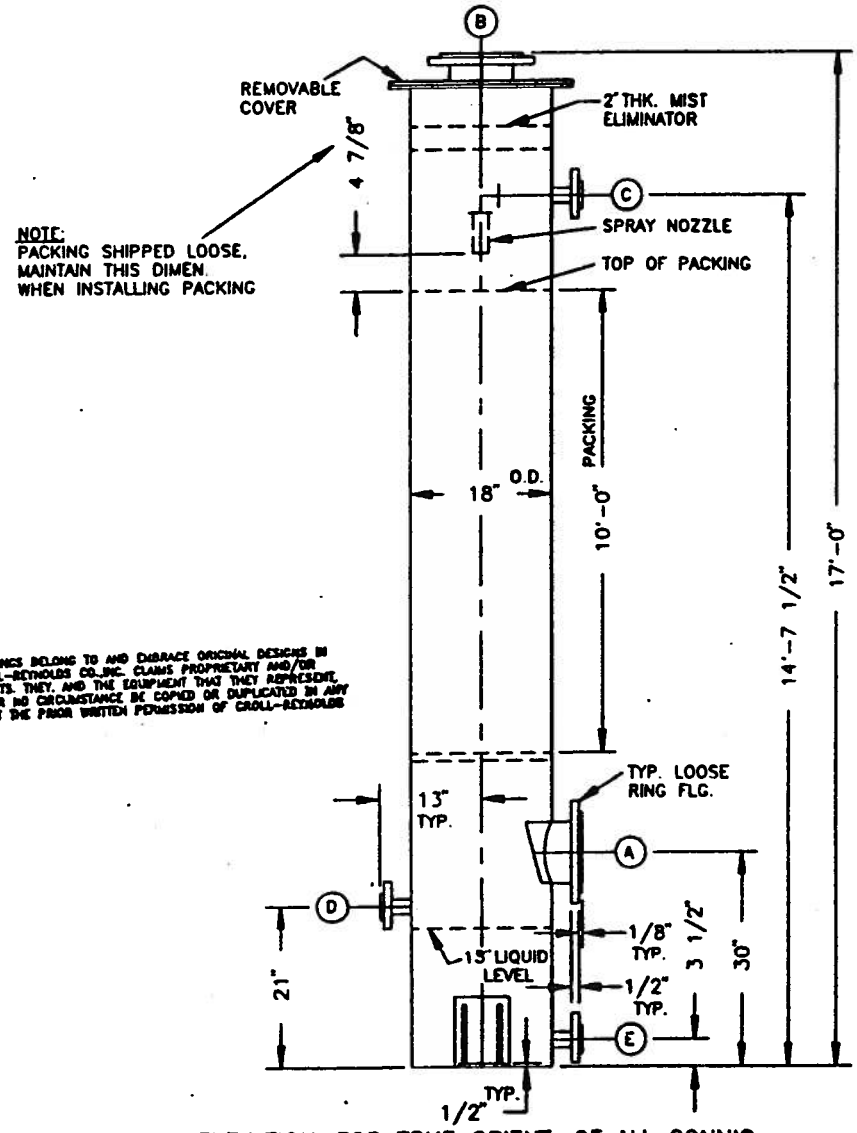

THESE DRAWINGS BELONG TO AND EMBRACE ORIGINAL DESIGNS IN WHICH CROLL-REYNOLDS CO., INC. CLAIMS PROPRIETARY AND/OR PATENT RIGHTS. THEY, AND THE EQUIPMENT THAT THEY REPRESENT, SHALL UNDER NO CIRCUMSTANCE BE COPIED OR DUPLICATED IN ANY WAY WITHOUT THE PRIOR WRITTEN PERMISSION OF CROLL-REYNOLDS CO., INC.

ELEVATION—FOR TRUE ORIENT. OF ALL CONN'S. & HOLDDOWN LUGS—SEE PLAN VIEW

NOTES:
1.) APPROX. WTS.—EMPTY—2,630 LBS.
OPERATING—3,120 LBS.
2.) HOLDDOWN LUGS FOR PLACEMENT ONLY, NOT DESIGNED FOR WINDLOADING.
3.) BOLT HOLES IN ALL FLG'D. CONN'S. ARE EQUALLY SPACED.
4.) MAT'L OF CONSTRUCTION
SHELL—S.S. TYPE 316—L
LOOSE RING FLG'S.—CARBON STL.
PACKING & MIST ELIM.—S.S. TYPE 316
SPRAY NOZZLE—S.S. TYPE 316

CERTIFIED CORRECT FOR:
CUST. ORDER NO.- E89-188801
ITEM NO-
TAG NO-
C.R. CO. SERIAL NO - 67459
CROLL-REYNOLDS CO. INC.
ENGINEERING DEPT.
DATE: 4-5-89

REV	DATE	DESCRIPTION

CROLL-REYNOLDS COMPANY, INC.
WESTFIELD, N.J.

NO.18—10H PACKED TOWER LAYOUT

SCALE: 3/4"=1'0"
F.S. 3-27-89

FSB—20433—E

APPENDIX D

Description of Gas Streams

and Material Balance

RECEIVED
OCT 11 1989
DEPT OF NATURAL RESOURCE
BUREAU OF POLLUTION CONTROL

Kerr-McGee Chemical Corporation
Forest Products Division
Columbus, Mississippi Facility

APPENDIX D
Description of Gas Stream and Material Balance

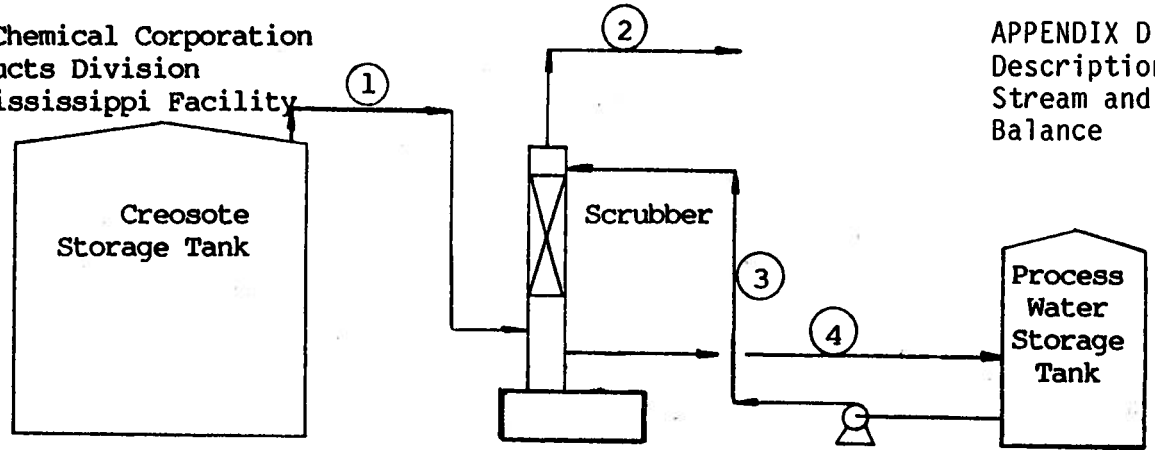

Emission Description	Stream 1	Stream 2	Stream 3	Stream 4
H_2O (lb./hr.)	251.4	6.0	24989	25234
O_2 (lb./hr.)	46.6	46.6	--	--
N_2 (lb./hr.)	179.2	179.2	--	< 1
Hydrocarbon Vapor (lb./hr.)	19.5	0.8	--	< 1
Creosote (lb./hr.)	--	--	1	20
Total (lb./hr.)	496.7	232.6	24990	25254
HC Vapor Mole. Wt.	123	80	--	--
ACFM	174	55	--	--
Actual GPM	--	--	50.1	50.7
Temp., °F	190	85	85	87
Pressure (psia)	14.6	14.6	7.0	--

APPENDIX E

Manufacturer's Operating Conditions

and

Performance Data for

Packed Tower

APPENDIX E

OPERATING CONDITIONS AND PERFORMANCE DATE

Model No.: 18T-10H Croll-Reynolds Job No.: 67459

I. OPERATING CONDITIONS

A. Gas Inlet Rate Capacity: 200 acfm

B. Gas Inlet Temperature: 200°F

C. Gas Inlet Pressure: 1 atmospheric

D. Gas Composition: by wt: 51.5% H_2, 9.1% O_2, 35.2% N_2
4% total carbon

E. Liquid Inlet Rate:
1. 50 gpm
2. gpm

F. Pressure At Liquid Inlet:
1. 7 psig
x specific gravity:
2. psig
x specific gravity:

G. Liquid Composition:
1. water
2.

H. Maximum Liquid Temperature: 90°F

I. Pressure Drop Across System: 2 Inch(es) W.G.

APPENDIX F

Inspection Checklist

Daily Shift Log

KERR-MCGEE CHEMICAL CORPORATION
FOREST PRODUCTS DIVISION
COLUMBUS FACILITY

Inspection Checklist
Packed Tower Water Scrubber
Air Emission Control Monitoring
Daily Shift Log

Date _____

Shift _____ Time: _____ Operator _____

1. Equipment Monitoring	Frequency	Reading/Condition	Design Specification
Storage Tank Fittings & P/V Relief Valve	3/Day		Closed/No leakage
Water Tank	3/Day		12" Freeboard
Water Pump	3/Day		Operational
Elec. Controls	3/Day		Interlocked

2. Gas Inlet Flow To Scrubber	Frequency	Reading/Condition	Design Specification
Inlet Flow Rate	1/Week		200 ACFM
Inlet Temperature	3/Day		200°F
Inlet Pressure	3/Day		4 inches

3. Water Inlet Flow To Scrubber	Frequency	Reading/Condition	Design Specification
Inlet Flow Rate	1/Week		50 GPM
Flow Temperature	3/Day		90°F
Inlet Pressure	3/Day		7.0 psi
Level in Scrubber	3/Day		18 inches
Drain Scrubber	1/Week		

4. Notes & Comments:
Actions taken/Maintenance or Repair

_____

_____

_____

_____

_____

_____

_____

APPENDIX G

Construction Permit No. 1680-00020

Dated February 14, 1989

MISSISSIPPI DEPARTMENT OF NATURAL RESOURCES
Bureau of Pollution Control
P.O. Box 10385
Jackson, Mississippi 39289-0385
(601) 961-5171

April 4, 1989

Certified Mail No. P 962 285 440

Mr. Peter C. Gaskin, Environmental Control
Kerr-McGee Chemical Corporation,
Forest Products Division
P.O. Box 906
Columbus, Mississippi 39701

Dear Mr. Gaskin:

Re: Construction Permit No. 1680-00020
Columbus, Mississippi

We have completed our review of the plans and specifications for the above referenced permit and approval is hereby indicated for air pollution control purposes only. Enclosed please find Construction Permit No. 1680-00020 construction of the air emissions equipment and air pollution control equipment.

Prior to startup of the air emissions equipment at this facility, a Performance Evaluation Permit must be obtained from the Permit Board. In order to obtain the Performance Evaluation Permit, it will be necessary to submit certification by a professional engineer registered in the State of Mississippi that construction was completed in accordance with the approved plans and specifications and a written request for the permit.

Any appeal of this permit action must be made within the 30 day period provided for in Section 49-17-29(4)(b) Mississippi Code of 1972.

If you have any questions or if we can be of any service, please let me know.

Very truly yours,

Bobby V. Whitaker
North Air Emissions Section

BVW:sr
Enclosure

RECEIVED
APR 6 1989
KERR-McGEE CORP.
FOREST PRODUCTS DIV.

STATE OF MISSISSIPPI
AIR POLLUTION CONTROL
PERMIT

TO CONSTRUCT AIR EMISSIONS EQUIPMENT

THIS CERTIFIES THAT

Kerr-McGee Chemical Corporation
Forest Products Division
14th Avenue & 20th Street North
Columbus, Mississippi

has been granted permission to construct air emissions equipment to comply with emission limitations, monitoring requirements and other conditions set forth herein. This permit is issued in accordance with the provisions of the Mississippi Air and Water Pollution Control Law (Section 49-17-1 et. seq., Mississippi Code of 1972), and the regulations and standards adopted and promulgated thereunder.

Issued this 14th day of February, 1989

MISSISSIPPI NATURAL RESOURCES PERMIT BOARD

DIRECTOR, BUREAU OF POLLUTION CONTROL
MISSISSIPPI DEPARTMENT OF NATURAL RESOURCES

Permit No. 1680-00020
Emission Point 004

PART I
GENERAL CONDITIONS

1. The plans, specifications, schedules, dates and other data submitted to the Permit Board are filed with and considered as a part of this permit.

2. All air pollution control facilities shall be designed and constructed such as to allow proper operation and maintenance of this permit.

3. The necessary facilities shall be constructed so that solids removed in the course of control of air emissions may be disposed of in a manner such as to prevent the solids from becoming windborne and to prevent the materials from entering State waters.

4. The air pollution control facilities shall be constructed such that diversion from or bypass of collection and control facilities is not needed except (i) where unavoidable to prevent loss of life or severe property damage or (ii) when approved by the Mississippi Natural Resources Permit Board.

5. The construction of facilities shall be performed in such a manner as to reduce both point source and fugitive dust emissions to a minimum.

6. The permittee shall allow the Mississippi Department of Natural Resources Bureau of Pollution Control and the Mississippi Natural Resources Permit Board and/or their representatives upon presentation of credentials:

   a. To enter upon the permittee's premises where an air emission source is located or in which any records are required to be kept under the terms and conditions of this permit; and

   b. At reasonable times to have access to and copy any records required to be kept under the terms and conditions of this permit; to inspect any monitoring equipment or monitoring method required in this permit; and to sample any air emission.

7. After notice and opportunity for a hearing, this permit may be modified, suspended, or revoked in whole or in part during its term for cause including, but not limited to:

   a. Violation of any terms or conditions of this permit;

   b. Obtaining this permit by misrepresentation or failure to disclose fully all relevant facts, or

   c. A change in any condition that requires either a temporary or permanent reduction or elimination of authorized air emissions.

8. Except for data determined to be confidential under the Mississippi Air & Water Pollution Control Law, all reports prepared in accordance with the terms of this permit shall be available for public inspection at the offices of the Mississippi Department of Natural Resources Bureau of Pollution Control.

9. The issuance of this permit does not convey any property rights in either real or personal property, or any exclusive privileges, nor does it authorize any injury to private property or any invasion of personal rights, nor any infringement of Federal, State or local laws or regulations.

10. Nothing herein contained shall be construed as releasing the permittee from any liability for damage to persons or property by reason of the installation, maintenance, or operation of the air cleaning facility, or from compliance with the applicable statutes of the State, or with local laws, regulations, or ordinances.

11. This permit is non-transferable.

12. This permit is for air pollution control purposes only.

13. Approval to construct will expire should construction not begin within one (1) year of the issuance of this permit, or should construction be suspended for one (1) year or more.

14. This permit shall become void upon completion of construction. The permittee shall furnish the Bureau of Pollution Control written notification of construction completion within 15 days of such date.

15. Prior to startup of air emissions equipment at this source, a Performance Evaluation Permit must be obtained. The permittee shall submit certification by a professional engineer registered in the State of Mississippi that construction completed in accordance with the approved plans and specifications and a written request for the permit.

PART II
EMISSION LIMITATIONS AND MONITORING REQUIREMENTS

Beginning February 14, 1989, the permittee is authorized to construct air emissions equipment for the emission of air contaminants from a 57,000 gallon creosote storage tank, controlled by a scrubber, Emission Point 004.

The air emissions equipment shall be constructed to comply with the emission limitations and monitoring requirements specified below.

EMISSION LIMITATIONS

Volatile Organic Compounds (VOC) 0.8 lb/hr, 3.5 tons/year, and reduction of control equipment inlet VOC by 95% as set forth by 40 CFR 60.112b(a)(3).

REPORTING & RECORDKEEPING

The permittee shall provide notices and reports, and maintain records as required by 40 CFR 60, Section 60.115b.

TESTING & PROCEDURES

The permittee shall demonstrate compliance with the required control efficiency for VOC emissions as required by 40 CFR 60.113b.

PART III
OTHER REQUIREMENTS

(1) The operator of the equipment covered by this permit shall operate and maintain this equipment to assure that the emission rates will not, at any time, exceed the rates allowed by the Mississippi Air Emission Regulations.

(2) The permittee is required to meet all applicable conditions and requirements contained in New-Source Performance Standards (NSPS), Subpart Kb.

(3) The permitted system must be controlled by a closed vent system and scrubber. The closed vent system shall be designed to collect all VOC vapors and gases discharged from the storage vessel and operated with no detectable emissions as indicated by an instrument reading of less than 500 ppm above background. The control device shall be designed and operated to reduce inlet VOC emissions by 95% or greater.

(4) The permittee is allowed to store only creosote in the storage vessel. The amount of creosote stored must be recorded at all times. The maximum true vapor pressure of the stored creosote must be recorded at all times.

TABLE I

RESULTS OF VOLATILE ORGANIC EMISSIONS STUDY

TABLE 1
KERR-McGEE CHEMICAL CORPORATION
FOREST PRODUCTS DIVISION
COLUMBUS, MS FACILITY

RESULTS OF VOLATILE ORGANIC EMISSION STUDY
Conducted September 21, 1989

Test Run	Time	Flow Rates		Temperature (°F)			PID Readings (ppm)		Percent Removal
					Scrubber		Scrubber		
		Tank(GPM)	Scrubber(CFM)	Tank	Inlet	Outlet	Inlet	Outlet	
1	0835	0	0	195	N/A	74	N/A	22.4	N/A
2	0850	0	0	194	N/A	82	N/A	16.5	N/A
3	0911	0	0	194	N/A	84	N/A	31.0	N/A
4	1002	1050	140	195	178	85	609	0.0	100
5	1017	800	107	130	176	86	310	1.2	99.6
6	1037	971	130	200	175	85	313	9.0	97.1
7	1514	925	124	204	198	100	312	1.4	99.6
8	1536	822	110	187	174	85	719	36.2	95.0
9	1553	271	36	186	160	85	288	11.7	95.9

KERR-McGEE CHEMICAL CORPORATION
KERR-McGEE CENTER • OKLAHOMA CITY, OKLAHOMA 73125

November 10, 1989

CERTIFIED - RETURN RECEIPT REQUESTED

Mr. Bobby V. Whitaker, P.E.
North Air Emissions Section
Bureau of Pollution Control
P.O. Box 10385
Jackson, MS 39289-0385

Dear Mr. Whitaker:

Re: Kerr-McGee Chemical Corporation
Forest Products Division
Columbus, MS Facility
Performance Evaluation Permit
No. 1680-00020

This serves to advise the Bureau of Pollution Control (BPC) that Performance Evaluation Permit No. 1680-00020 for operation of the packed tower water scrubber during startup and performance evaluation at the Kerr-McGee Chemical Corporation, Forest Products Division (KMCC-FPD), Columbus Facility, will expire November 11, 1989.

Should the BPC not respond to KMCC-FPD's request for an operating permit for the air emission control device, dated October 10, 1989, KMCC-FPD requests the BPC grant an extension for the current Performance Evaluation Permit to such time an operating permit is approved.

During our phone conversation on October 30, you had indicated approval of our request was under consideration by the BPC. Nevertheless, if the permit approval process extends beyond the expiration date of the evaluation permit, KMCC-FPD would like to have that permit extended.

Please call me should you have any questions.

Sincerely,

KERR-McGEE CHEMICAL CORPORATION
FOREST PRODUCTS DIVISION

P. C. Gaskin
Staff, Environmental Control
and Regulatory Affairs

PCG:wpc

cc: W. H. Lamansky
J. H. Bull

FOREST PRODUCTS

APPLICATION FOR CONSTRUCTION

ORGANIC AIR EMISSION CONTROL

EQUIPMENT

PC Gaskin

KERR-McGEE

KERR-McGEE CENTER • OKLAHOMA CITY, OKLAHOMA 73125

January 11, 1989

Mr. Bobby Whitaker
North Air Emissions Section
Bureau of Pollution Control
P.O. Box 10385
Jackson, MS 39209

Re: Kerr-McGee Chemical Corporation
Forest Products Division
Columbus, MS Facility
Operating Permit 1680-00020

Dear Mr. Whitaker:

Please find enclosed the revised application to construct a creosote storage tank at the Kerr-McGee Chemical Corporation, Forest Products Division (KMCC-FPD) Columbus Facility. The original application submitted to the Bureau of Pollution Control (BPC) on August 12, 1988 is incorporated by reference and a copy attached as Appendix B.

The application to construct the storage tank was denied by the BPC for the reason that the new storage tank is subject to New Source Performance Standards that require control of volatile organic emissions from the tank. The enclosed revised application provides information on air emission control equipment proposed for the new storage tank.

Should you have any questions or would like to schedule a meeting to discuss the application or the project, please contact me at (405) 270-2395.

Sincerely,

KERR-McGEE CHEMICAL CORPORATION
FOREST PRODUCTS DIVISION

P.C. Gaskin
Staff, Environmental Control
and Regulatory Affairs

PCG:wpc

cc: Ross Harrod, Plant Superintendent

FOREST PRODUCTS

STATE OF MISSISSIPPI
DEPARTMENT OF NATURAL RESOURCES
BUREAU OF POLLUTION CONTROL
P.O. BOX 10385
JACKSON, MISSISSIPPI 39209

For Agency Use
FACILITY NUMBER

Date Received

Month Day Year

Kerr-McGee Chemical Corporation
Forest Products Division
Columbus Facility
Operating Permit No. 1680-00020

APPLICATION FOR PERMIT TO CONSTRUCT AND/OR
OPERATE AIR EMISSIONS EQUIPMENT - GENERAL FORM

APPLICATION FOR: X CONSTRUCTION ____ PERMIT RENEWAL - PLEASE CHECK APPROPRIATE BOX

1. Name, Address, Location, and Telephone Number
   A. Name Kerr-McGee Chemical Corporation, Forest Products Division
   B. Mailing Address of Applicant
      1. Street Address or P.O. Box P. O. Box 906
      2. City Columbus 3. State Mississippi
      4. Zip Code 39701 5. Telephone No. (601) 328-7551
   C. Location of Facility
      1. Street 14th Avenue and 20th Street North
      2. City Columbus 3. State Mississippi
      4. Zip Code 39701 5. Telephone No. (601) 328-7551
   D. If the facility is located outside the City limits, please provide a sketch or description showing the approximate location and attach to this application.
2. SIC Code 2491
3. Number of Employees 64
4. Principal Product Creosote treated wood cross ties
5. Principal Raw Materials Creosote, mixed hardwoods
6. Principal Process Rueping pressure process
7. Maximum amount of principal product produced or raw material consumed per day 14,000 cu. ft. wood treated; 4,000 cross ties; 10,000 gallons creosote
8. (A) Check here if operation which generates air pollutant emissions occurs all year ____, or specify the months the operation occurs: Year round operation
   (B) Specify how many days per week the operation occurs: 5 days
   (C) Specify how many hours per day the operation occurs: 1½ to 3 hours
9. If this application is for existing facility permit renewal only, has the facility been modified in any way (including production rate, fuel, and/or raw material changes) during period covered by the Operating Permit ____ Yes X No or since 1972? ____ Yes X No
   If Yes, give year(s) in which modification(s) occurred. ____
10. ALL APPLICATIONS MUST BE SIGNED BY THE APPLICANT.

I certify that I am familiar with the information contained in the application and that to the best of my knowledge and belief such information is true, complete, and accurate, and that I am the owner or chief corporate officer, or his designated representative, responsible for complying with air pollution control laws and regulations.

Peter C. Gaskin
Printed Name of Person Signing

Staff, Environmental Control & Regulatory Affairs
Title

December 20, 1988
Date Application Signed

Signature of Applicant

PLEASE COMPLETE FOLLOWING PAGES WHERE APPLICABLE

FOR ALL APPLICANTS, WHETHER NEW CONSTRUCTION, EXISTING FACILITY, OR RENEWAL

CONTROL EQUIPMENT COVERED UNDER THIS APPLICATION - PLEASE CHECK ALL APPLICABLE AND INDICATE NUMBER OF UNITS.

PARTICULATE EMISSIONS CONTROL EQUIPMENT

1. Cyclone(s) _____
2. Water Scrubber _____
3. Baghouse _____
4. Electrostatic Precipitator _____
5. Venturi Scrubber _____
6. Cyclonic Baghouse _____
7. Cyclonic Scrubber _____
8. Other _____

GASEOUS EMISSIONS CONTROL EQUIPMENT

1. Water Scrubber Packed Tower
2. Activated Carbon Bed _____
3. Other _____

WASTE DISPOSAL SYSTEMS

1. Solid Waste Incinerator _____
2. Liquid Waste Incinerator _____
3. Wood or Other Waste Fuel Recovery Boiler _____
4. Gaseous Waste Flare _____
5. Liquid Waste Flare _____
6. Other _____

Pneumatic Conveying System _____

Other (please describe)

FOR ALL APPLICANTS

NOT APPLICABLE

FUEL BURNING EQUIPMENT
(Except for Refuse Disposal)

This form has 3 pages; each is a continuation of the equipment information from the page before. Please fill in as completely as possible, listing all fuel burning equipment. Reasons should be given explaining any data not filled in.

PAGE 1

1. Fill in company name and address, plus year for which data is given (if existing facility) at top of page. Use data for most recent calendar year available.
2. Reference Number. Use an identifying number for each boiler, furnace, kiln, etc., and use the same reference number on each of the three pages to identify information for the same unit.
3. Manufacturer and Model Number. Nameplate data for boiler, furnace, kiln, etc. Waste gas flares and stationary internal combustion engines should also be included on this form.
4. Rated Capacity in Millions of BTU per hour.
5. Type of Burner Unit. Use Codes (1*) at bottom of form. If not listed put (11) and specify
6. Usage. Type of fuel burning equipment. Use codes (2*) at bottom of form. If not listed put (5) and specify.
7. Heat Usage. Percent of heat used for process and percent for space heating.

NOT APPLICABLE

FUEL BURNING EQUIPMENT
(Except for Refuse Disposal)

1 FACILITY NAME	Address	for Agency use Only
Kerr-McGee Chemical Corporation Forest Products Division	P. O. Box 906 Columbus, MS 39701	

FACILITY NUMBER	Information for Calender Year	Date
	19____	12/12/88

2	3	4	5	6	7	
Reference Number	Manufacturer and Model Number	Rated Capacity 10^6 BTU/hr	Type of Burner Unit (use code 1*)	Usage (use code 2*)	Most Usage % Process	% Space heat

1* BURNER CODES

1. Cyclone furnace
2. Pulverized coal
3. Spreader Stoker
4. Hand fired
5. Other stoker (specify)
6. Multiple port gas
7. Forced draft gas
8. Atomizing Oil (Stove of Air)
9. Atomizing Oil (Mechanical)
10. Rotary Cup Oil
11. Others (specify)

2* USAGE CODES

1. Boiler, Steam
2. Boiler, Other (specify)
3. Air Heating for Space Heating
4. Air Heating for Process Usage
5. Others (specify)

FUEL BURNING EQUIPMENT

(FOR AGENCY USE ONLY)

NOT APPLICABLE

Reference Number	Stack Parameters					Fuel Data				
	Stack Height Feet	Inside Exit Dia. Feet	Exit Gas Velocity Feet/Sec.	Exit Gas Temperature Degree F.	Fuel Type	Maximum Amount Per Hour (Specify Units)	Amount Per Year (Specify Units)	Heat Content BTU/Gal, etc. (Specify Units)	Percent Sulfur	Percent Ash

FUEL SUPPLIERS:

Fuel Type	Supplier

(FOR AGENCY USE ONLY)

NOT APPLICABLE

FUEL BURNING EQUIPMENT

11	12				13			
Reference Number	Air Pollution Control Equipment				Emissions (Tons/Year)			Basis of Estimate
	Manufacturer and Model Number	Type* (Use Table 1)	Efficiency					
			Design	Actual	Particulate	SO_2	Other (specify)	

*For Wet Scrubber give Gallons per minute Water Flow and Water Pressure if known.

MANUFACTURING PROCESS OPERATIONS

Company Name	Address	FOR AGENCY USE
Kerr-McGee Chemical Corporation Forest Products Division	P. O. Box 906 Columbus, MS 39701	

FACILITY NUMBER	Information for Calendar Year	Date
	19 88	12/12/88

Reference Number	Process or Unit Operation Name	Rated Process Capacity Tons/Hour	Feed Input (tons) Quantity Per Hour	Feed Input (tons) Quantity Per Year	Number of Emission Points To Air	Product Output - (tons) Quantity Per Hour	Product Output - (tons) Quantity Per Year
01	Creosote Storage Tank	540*	243	63180	1	243	63180
	*2000 gpm @ 9#/gal.						

*Specify Units of Measure Used

(FOR AGENCY USE ONLY)

MANUFACTURING PROCESS OPERATIONS

Reference Number	Stack Data				Air Pollution Control Equipment			
	Height Feet	Inside Unit Dia. Feet	Exit Gas Velocity Feet/Sec.	Exit Gas Temperature °F	Manufacturer and Model Number	Type* (use Table 1)	Collection Efficiency	
							Design	Actual
01	22	1.5	55 ACFM	92	Croll-Reynolds Model No. 18T - 10H	46	95.9	UNK
						50 gpm @ 6.3 psia		

*For Wet Scrubbers Give Gallons per minute Water Flow and Water Pressure if known.

(FOR AGENCY USE ONLY)

MANUFACTURING PROCESS OPERATIONS

11	12					
Reference Number	Process Emissions*				Basis for Estimation	(Agency Comments Only)
	Particulates	Sulfur Oxides	Others (Specify by chemical composition)			
01		Composition	Lb./hr.	Tons/yr.		
		H_2O	7.5	0.6	Computer simulation used	
		O_2	46.0	3.6	as basis for estimation of	
		N_2	179.2	14.0	process emissions. Appendix A	
		Total C	0.8	0.1	presents a schematic diagram	
					of the emission stream data,	
					proposed layout of packed tower	
					specifications, and description	
					of use.	

*Please Express Emissions as Tons per Year and Pounds per Hour and Identify Units Being Used.

NOT APPLICABLE

REFUSE DISPOSAL AND INCINERATION

A

Company Name	Information for Year	(Agency Use Only)
Address	Date	

B

Description of Waste Materials

Type (Describe)	C Maximum Amount Per Day (Pounds)	D Amount Per Year (Tons)	E Method of Disposal 1*

If Waste Disposal is by Incineration, Specify the Following:

1. Type of Incinerator:
   - single chamber ☐
   - multiple Chamber ☐
   - Modified (describe) ☐
   - Other (describe) ☐
   - Rotary ☐
   - Flue Fed ☐

_____

_____

_____

2. Manufacturer's Name: _____
   Model Number _____
   Rated Capacity _____ Pounds / Hour _____ Type Waste
3. Quantity Burned: _____ Pounds / Day
   _____ Tons / Year
4. Operating Schedule _____ Hours / Day
   _____ Days / Year

*1 Disposal Method Codes

1. Open Burning
2. Landfill (No Burning)
3. Incinerator (Complete rest of Form)
5. Burned in Boiler or Furnance
6. Other (Specify)

(AGENCY USE ONLY)

NOT APPLICABLE

5. Auxiliary Fuel:

Type _____

Amount/Year (Specify Units) _____

Heat Content _____

Percent Sulfur _____

Percent Ash _____

Supplier's Name _____

6. Pollution Control Equipment:

Manufacturer _____

Model Number _____

% Efficiency _____

Type _____

GPM Water Flow (If Wet Scrubber) _____

7. Stack Data:

Height _____ Feet

Inside Exit Diameter _____ Feet

Exit Gas Velocity _____ Feet/Sec.

Exit Gas Volume _____ SCFM

Exit Gas Temp. _____ °F.

8. Estimated Emissions From Refuse Incineration:

Name:			Basis of Estimates:
Particulates	_____	Tons/Year	_____
Sulfur Oxides	_____	"	_____

ADDITIONAL INFORMATION

1. Two copies of construction site plot plan.
2. Two copies of detailed equipment drawings.
3. Two copies of a detailed explanation of the process and control equipment.
4. Two copies of a flow diagram of the of the process or operation showing control devices.

SIGNATURES: If for construction, the application must be submitted in duplicate and both copies should also be signed and stamped by an engineer registered in the State of Mississippi. If application is for Existing Facility or Renewal of Permit to Operate, registered engineer's signature not required. All signatures and stamps must be originals on all copies, not photocopies.

TYPED NAME & MISSISSIPPI REGISTRATION NUMBER

SIGNATURE OF ENGINEER REGISTERED IN MISSISSIPPI

Seal of Engineer
Registered in Mississippi

APPENDIX A

Schematic Diagram of Emission Stream
Data, Proposed Layout of Packed Tower
Specifications and Use

Kerr-McGee Chemical Corporation
Forest Products Division
Columbus, Mississippi Facility

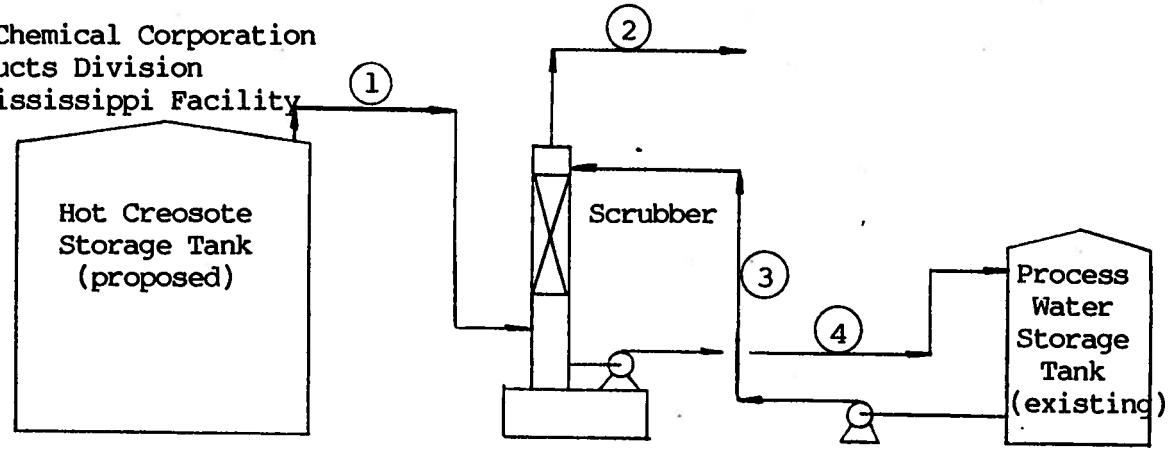

Emission Description	Stream 1	Stream 2	Stream 3	Stream 4
H_2O (lb./hr.)	251.4	7.5	24989	25234
O_2 (lb./hr.)	46.6	46.0	--	--
N_2 (lb./hr.)	179.2	179.2	--	< 1
Hydrocarbon Vapor (lb./hr.)	19.5	0.8	--	< 1
Creosote (lb./hr.)	--	--	1	20
Total (lb./hr.)	496.7	231.6	24990	25254
HC Vapor Mole. Wt.	123	80	--	--
ACFM	174	55	--	--
Actual GPM	--	--	50.1	50.7
Temp., ^oF	190	85	85	87
Pressure (psia)	14.6	14.6	6.3	--

APPENDIX A

CR PROPOSAL Customer Inquiry Coal Tar Distillate Fumes C.R. Ref. 0000 11 010

CROLL-REYNOLDS PACKED TOWER

TO: Kerr-McGee Corporation

MODEL NO.: 18T-10H
QUANTITY: One (1)
PRICE PER SYSTEM:

F.O.B.:
TERMS: Net 30 ☒

ESTIMATED DELIVERY:
12-14 Weeks after drawing approval
3 Weeks for drawings

☐ ITEM IN STOCK DELIVERY:
_____ Weeks after receipt of order

Deliveries are quoted based on standard shop schedules at the time of quote. Special delivery requirements may be accommodated on an individual basis.

COMMENTS:
Since Croll-Reynolds Co. has no control over the mixture or concentration of corrosive elements which may come in contact with the equipment supplied, no guarantee is expressed or implied concerning materials of construction for corrosion resistance.
Customer should make every effort to assure suitability prior to purchase.

SPECIFICATIONS

DIMENSIONS

Gas Inlet/Outlet 8" / 8"
Scrubbing Liquid Inlet: 1.5"
Tower Diameter: 18" Height: 17'-0"
Liquid Storage: YES ☒ NO ☐ Capacity 20 Gallons
Tank Connections: Drain 2", Fill -, Overflow 2"
Recycle No, Manway No, Removable Top Yes
Separator Type: Mesh Mist Eliminator
Packing Type Rings Size: 1"

MATERIALS OF CONSTRUCTION

ITEM	MATERIAL
Tower Shell:	"304L" SS or "316L SS" *
Packing:	"316" Stainless Steel
Mist Eliminator:	"304" " "
Liquid Distributor:	"316" " "

*All wetted parts.

APPROXIMATE WEIGHT
Shipping: _____ Operating: _____

CONSTRUCTION DESIGN

In general accordance with: standard good shop practice.
PS 15-69 ☐ ASME Code ☐ ASME Code Stamped ☐
or vessel designed for pressure/vacuum flooded -
Wall Thicknesses: 1/8"
Head Thicknesses Bottom/Top 1/8" / 1/8"
Hold down lugs Included ☒ Not included ☐
Lifting lugs Included ☐ Not included ☒

OPERATING CONDITIONS

Gas Inlet Rate Capacity: 200 acfm
Gas Inlet Temperature: 200°F
Pressure: 1 Atmosphere
Gas Composition: By Wt. 51.5% H_2O, 9.1% O_2, 35.2% N_2, 4.2% Total Carbon
Liquid Inlet Rate: 30 gpm
Pressure at Liquid Inlet: 6 psig
x Specific Gravity: Approx. 1.05
Liquid Composition: Creasote
Maximum Liquid Temperature: 90°F (Inlet)
Pressure Drop Across System: 1.5 Inch(es) W.G.

Proposal by: Arthur Schlett
Date: 11-19-88

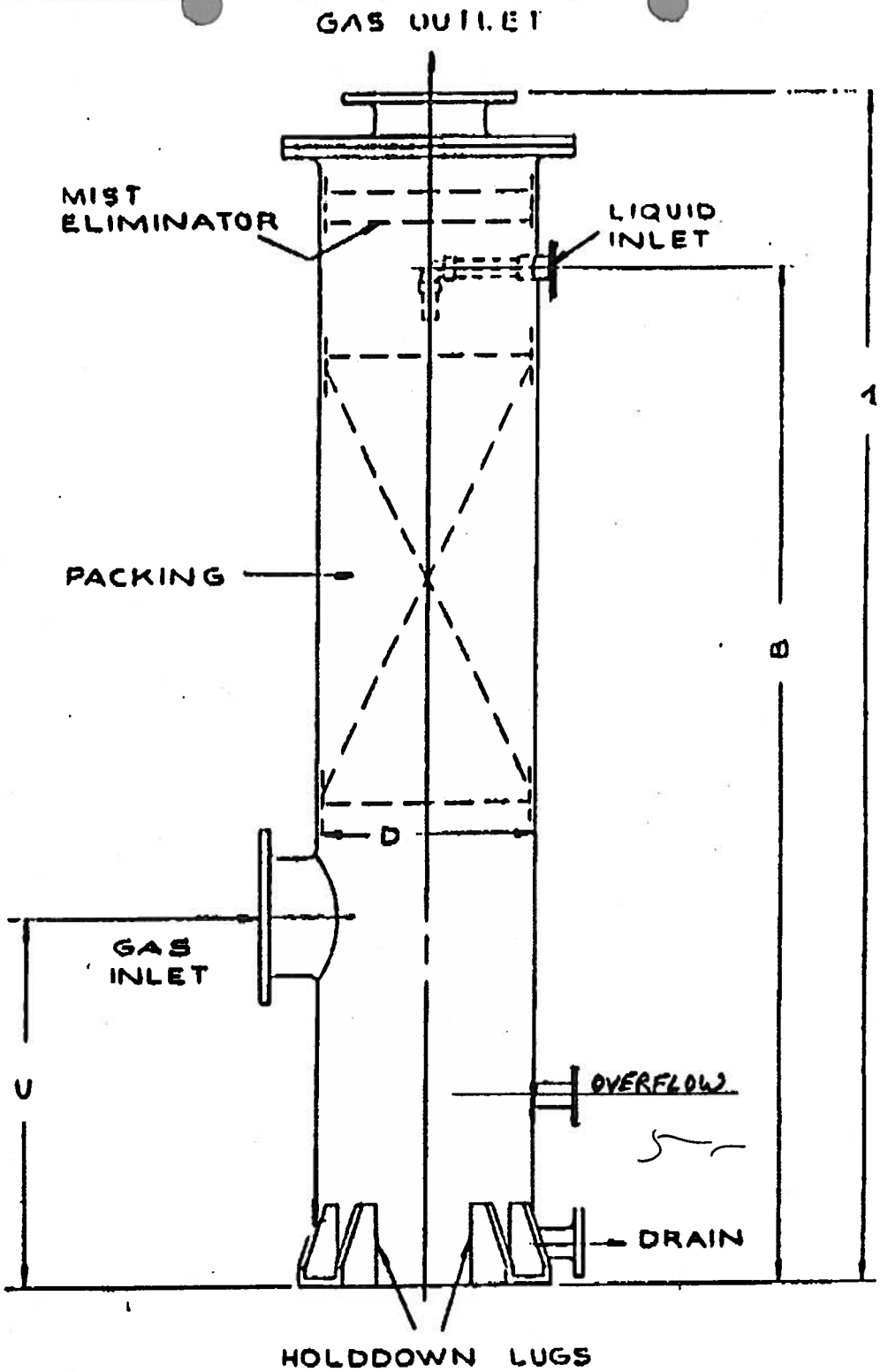

CONNECTIONS	SIZE	LETTER	DIMENSION
GAS INLET	8"	A	17'-0"
GAS OUTLET	8"	B	14'-8"
LIQUID INLET	1½"	C	28"
DRAIN	2"	D	18"
OVERFLOW	2"		

18T-10H

ALL DIMENSIONS ARE APPROXIMATE

CROLL-REYNOLDS COMPANY, INC.
WESTFIELD, N.J.

PROPOSED LAYOUT OF PACKED TOWER

APPENDIX A (continued)

Use of Storage Tank and Packed Tower
Wet Scrubber

The storage tank shall be used as a charging tank or work tank that will temporarily store hot creosote utilized in the pressure treatment of wood crossties.

When a treating cylinder (retort) is charged with a load of crossties, creosote is pumped from the work tank to the treating cylinder to completely fill all voids. The fill pump rate is about 900 gpm, and the pump requires about 20 minutes to completely fill the treating cylinder. The work tank is normally maintained at two-thirds full and after the treating cylinder is filled, the tank has been reduced to about one-third full.

Following pressure treatment of the wood crossties to the required retention of creosote, the creosote is then pumped from the treating cylinder back to the work tank at the same 900 gpm rate.

The packed tower wet scrubber shall be operated during the pump back cycle when the creosote is being pumped from the treating cylinder to the work tank. As the tank fills, the vapor displaced will flow to the packed tower.

The controls for the pump feeding water to the packed tower will be interlocked with the controls for the creosote fill pump, so that the fill pump can only be used when there is water being fed to the packed tower.

APPENDIX B

Original Application for Construction
of Creosote Storage Tank, Dated
August 12, 1988

STATE OF MISSISSIPPI
DEPARTMENT OF NATURAL RESOURCES
BUREAU OF POLLUTION CONTROL
P.O. BOX 10385
JACKSON, MISSISSIPPI 39209

For Agency Use
FACILITY NUMBER

Date Received

Month Day Year

Kerr-McGee Chemical Corporation
Forest Products Division
Columbus Facility
Operating Permit No. 1680-00020

APPLICATION FOR PERMIT TO CONSTRUCT AND/OR OPERATE AIR EMISSIONS EQUIPMENT - GENERAL FORM

APPLICATION FOR: X CONSTRUCTION ____ PERMIT RENEWAL - PLEASE CHECK APPROPRIATE BOX

1. Name, Address, Location, and Telephone Number
   A. Name Kerr-McGee Chemical Corporation, Forest Products Division
   B. Mailing Address of Applicant
      1. Street Address or P.O. Box 906
      2. City Columbus 3. State Mississippi
      4. Zip Code 39701 5. Telephone No. (601) 328-7551
   C. Location of Facility
      1. Street 14th Avenue and 20th Street North
      2. City Columbus 3. State MS
      4. Zip Code 39701 5. Telephone No. (601) 328-7551
   D. If the facility is located outside the City limits, please provide a sketch or description showing the approximate location and attach to this application.
2. SIC Code 2491
3. Number of Employees 64
4. Principal Product Creosote treated wood cross ties
5. Principal Raw Materials Creosote, mixed hardwoods
6. Principal Process Rueping pressure process
7. Maximum amount of principal product produced or raw material consumed per day 14,000 cu. ft. wood treated; 4,000 cross ties; 10,000 gallons creosote
8. (A) Check here if operation which generates air pollutant emissions occurs all year or specify the months the operation occurs: Year round operation
   (B) Specify how many days per week the operation occurs: 5 days
   (C) Specify how many hours per day the operation occurs: 8 to 24 hours
9. If this application is for existing facility permit renewal only, has the facility been modified in any way (including production rate, fuel, and/or raw material changes) during period covered by the Operating Permit ____ Yes X No or since 1972? ____ Yes X No
   If Yes, give year(s) in which modification(s) occurred. ____
10. ALL APPLICATIONS MUST BE SIGNED BY THE APPLICANT.

I certify that I am familiar with the information contained in the application and that to the best of my knowledge and belief such information is true, complete, and accurate, and that I am the owner or chief corporate officer, or his designated representative, responsible for complying with air pollution control laws and regulations.

Peter C. Gaskin
Printed Name of Person Signing

Staff, Environmental Control & Regulatory Affairs
Title

August 12, 1988
Date Application Signed

Signature of Applicant

PLEASE COMPLETE FOLLOWING PAGES WHERE APPLICABLE

RECEIVED
AUG 19 1988

ADDITIONAL INFORMATION REQUIRED FOR APPROVAL TO CONSTRUCT

The following additional information must be submitted. Failure to submit any of the additional information or to conform to the instructions will result in initial denial of the application.

1. Site Plan - The drawing or sketch submitted must be to scale and show at least the following:

   A. The property involved and outlines and heights of all buildings. Identify property lines plainly.

   B. Location and identification of all existing or proposed points of discharge of air contaminants to the atmosphere.

   C. Location of streets and all adjacent properties. Show location of all buildings outside the property that are within 150 feet of the equipment involved in the application. Identify all such buildings (as a residence, apartment, warehouse, etc.), specifying number of stories. Indicate north, and prevailing wind direction.

2. Drawings of Equipment (See Note Below) - Supply an assembly drawing, dimensioned and to scale, and plan elevation in as many sections as are needed to show clearly the design and operation of the equipment and the means by which air contaminants are controlled. The following must be shown:

   A. Size and shape of equipment. Show exterior and interior dimensions and features.

   B. Locations, sizes, and shape details of all features which may affect the production, collection, conveying or control of air contaminants of any kind; location, size and shape details concerning all materials handling equipment.

   C. All data and calculations used in selecting or designing the equipment.

   D. Horsepower rating of all motors driving the equipment.

   NOTE: Structural design calculations and details are not required.

ADDITIONAL INFORMATION MAY BE REQUIRED.

3. Description of Process and Control equipment - The application must be accompanied by two copies of a written description of each process to be carried out in the facility and the function of the equipment used in the process. The descriptions must be complete and particular attention must be given to explaining all stages in the process where the discharge of any materials might contribute in any way to air pollution. Control procedures must be described in sufficient detail to show the extent of control of air contaminants anticipated in the design, specifying the expected efficiency of the control devices. All obtainable data must be supplied concerning the nature, volumes, particle size, weights, chemical composition and concentrations of all types of air contaminants.

4. Two copies of a block flow diagram showing the steps of the process and the flow of materials through the process and any control devices must be supplied.

NOTE: THE APPLICATION FORM, SITE PLAN, AND EQUIPMENT MUST BE SIGNED AND STAMPED BY AN ENGINEER REGISTERED IN THE STATE OF MISSISSIPPI.

ADDITIONAL INFORMATION

1. Two copies of construction site plot plan.

2. Two copies of detailed equipment drawings.

3. Two copies of a detailed explanation of the process and control equipment.

4. Two copies of a flow diagram of the of the process or operation showing control devices.

SIGNATURES: If for construction, the application must be submitted in duplicate and both copies should also be signed and stamped by an engineer registered in the State of Mississippi. If application is for Existing Facility or Renewal of Permit to Operate, registered engineer's signature not required. All signatures and stamps must be originals on all copies, not photocopies.

Charles E. Hudnall, P.E.

Miss. Registered P.E. 3350
TYPED NAME & MISSISSIPPI REGISTRATION NUMBER

Charles E. Hudnall
SIGNATURE OF ENGINEER REGISTERED IN MISSISSIPPI

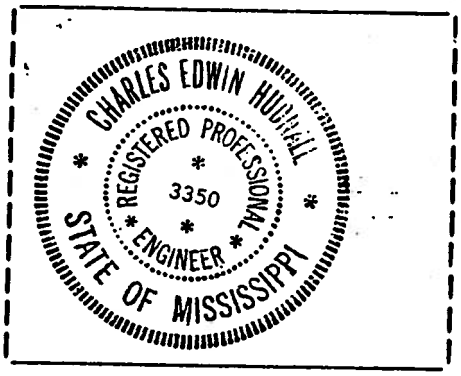

Seal of Engineer
Registered in Mississippi

FACILITY NAME Kerr-McGee Chemical Corporation

FACILITY ADDRESS Columbus Facility

TANK INDENTIFICATION NO./NAME Storage Tank No. 2

*New welded tank to replace old riveted tank. Same capacity and use.

1. Product stored; e.g. crude oil, gasoline, etc.	creosote
2. True vapor pressure of product at storage temperature (PSIA/°F)	1.45
3. Reid vapor pressure of product at storage temperature (PSIA/°F)	
4. Density of product stored at storage temperature (lbs/gal)	9.4
5. Molecular weight of product vapor at storage temperature lb/lb mole	130 - 210
6. Throughput for the most recent calendar year (gals/year)	400,000
7. Tank Capacity (gals)	57,000
8. Tank Diameter (feet)	18'
9. Tank Height (feet)	30'
10. Average Vapor Space Height (feet)	4'
11. Tank Construction: Riveted or Welded	Welded
12. Type of Tank:	Fixed roof
Fixed Roof	
Floating Roof: External or Internal	
Variable Vapor Space	
Pressure	
Other, Describe	
13. For external floating roof tanks, Type Seals: N/A	
Metallic shoe seal	
Primary seal only	
With shoe mounted secondary seal	
With rim mounted secondary seal	
Liquid mounted resilient seal	
Primary seal only	
With weather shield	
With rim mounted secondary seal	
Vapor mounted resilient seal	
Primary seal only	
With weather shield	
With rim mounted secondary seal	

TANK INDENTIFICATION NO./NAME — Storage Tank No. 2

14. For internal floating roof tanks, Type Seals: N/A	
Liquid mounted resilient seal	
Primary seal only	
With rim mounted secondary seal	
Vapor mounted resilient seal	
Primary seal only	
With rim mounted secondary seal	
Is the roof column supported? If yes, give	
a. Number of columns	
b. Column diameter (inches)	
15. Tank paint color; White, Aluminum (diffuse or specular), Light Gray, Medium Gray, Gray, Other (describe)	shall be aluminum jacketed
16. Tank paint condition: Good or Poor shall be	primed only
17. Tank shell condition: Light rust, dense rust, gunite lined	shall be sanblasted clean
18. Tank seal condition: Good or Poor	N/A
19. Date tank installed Proposed	August 1988
20. Tank modifications: Give date and describe	N/A
21. Is the tank equipped with a vapor recovery system? If yes, describe	No
22. Average wind velocity of the area (miles/hour)	*4.6 mi/Hr

* in Southerly to Northerly direction.

INTERNAL FLOATING ROOF TANKS ONLY

TANK INDENTIFICATION NO. Storage Tank No. 2

Deck Fitting Type		No. of Fittings
23. Access hatch	N/A	
Bolted cover, gasketed		
Unbolted cover, gasketed		
Unbolted cover, ungasketed		
24. Automatic gauge float well	N/A	
Bolted cover, gasketed		
Unbolted cover, gasketed		
Unbolted cover, ungasketed		
25. Column well	N/A	
Builtup column-sliding cover, gasketed		
Builtup column-sliding cover, ungasketed		
Pipe column-flexible fabric sleeve seal		
Pipe column-sliding cover, gasketed		
Pipe column-sliding cover, ungasketed		
26. Ladder well	N/A	
Sliding cover, gasketed		
Sliding cover, ungasketed		
27. Roof leg or hanger well	N/A	
Adjustable		
Fixed		
28. Sample pipe or well	N/A	
Slotted pipe-sliding cover, gasketed		
Slotted pipe-sliding cover, ungasketed		
Sample well-slit fabric seal, 10% open area		
29. Stub drain, 1 inch diameter	N/A	
30. Vacuum breaker	N/A	
Weighted mechanical actuation, gasketed		
Weighted mechanical actuation, ungasketed		

DECK CONSTRUCTION for INTERNAL FLOATING ROOF TANKS [for Bolted Decks ONLY]

31. Continuous sheet construction	N/A	
5 ft wide		
6 ft wide		
7 ft wide		
32. Panel construction	N/A	
5 X 7.5 ft rectangular		
5 X 12 ft rectangular		
33. Length of deck seams (feet)	N/A	
34. Area of deck (square feet)	N/A	

FACILITY NAME Koppers Chemical Corporation

FACILITY ADDRESS Columbus Facility

BULK STORAGE TANKS (LOADING/UNLOADING INFORMATION)

Storage Tank No. 2

New weleded tank to replace old riveted tank.
Same capacity and use.

Item No.	For Most Recent Calendar Year 1987	
1.	Product transferred: crude oil, gasoline, etc.	creosote
2.	Amount transferred (loading), gals/day Daily average	20,000 (est.)
3.	Amount transferred (unloading), gals/day	22,000 (est.)
4.	Amount transferred (pipe line), gals/day	42,000 (est.)
5.	Bulk temperature of the product, °F	100 - 150 F
6.	True vapor pressure of the product at storage temperature, psia	1.45
7.	Reid vapor pressure of the product, psia	
8.	Molecular weight of the product, lb/lb mole	130 - 210
9.	Density of the product at bulk temperature (lbs/gal)	9.1 - 9.4
10.	Type of loading: vessel, barge, truck, other (specify)	Tank Truck and RR Tankcar
11.	Type of filling: submerged, fill pipe Proposed splash filling, bottom filling, other (specify)	Submerged and bottom filling
11a.	If submerged fill is used, what approximate percent is the fill pipe submerged Proposed	100%
12.	Type of service: dedicated service to one product, vapor balance service, other (specify)	Dedicated to one product only; creosote
13.	Is loading/unloading operation equipped with vapor recovery or other pollution control system (specify)	No
14.	Efficiency of vapor collection system	N/A
15.	For ships/barges; The arrival cargo true ullage (feet) prior to dockside discharge	N/A
16.	For ships/barges; compartment condition before cargo discharge: fully loaded or lightered/short-loaded	N/A
17.	For ships; ballast water (gallons)	N/A
18.	For ships/barges; Receiving vessel/tank conditions: Uncleaned, Ballasted, Cleaned, Gas-Freed	N/A
19.	For ships/barges; The previous cargo was: Volatile, Non-Volatile, other (specify)	N/A