Mississippi Department of Environmental Quality
Office of Pollution Control

I-sys 2000 Master Site Detail Report

Site Name: Hercules Inc

PHYSICAL ADDRESS	
LINE 1:	613 West 7th Street
LINE 2:	
LINE 3:	
MUNICIPALITY:	Hattiesburg
STATE CODE:	MS
ZIP CODE:	39401-

MAILING ADDRESS	
LINE 1:	613 West 7th Street
LINE 2:	
LINE 3:	
MUNICIPALITY:	Hattiesburg
STATE CODE:	MS
ZIP CODE:	39401-

OTHER INFORMATION	
MASTER ID:	002022
COUNTY:	Forrest
REGION	SRO
SIC 1:	2822
AIR TYPE:	TITLE V
HW TYPE:	LARGE QUANTITY
SOLID TYPE:	
WATER TYPE:	INDUSTRIAL
BRANCH:	Chemical
ECED CONTACT:	Yassin, Mohammad
BASIN:	

AIR PROGRAMS ☑ SIP ☐ PSD ☐ NSPS ☐ NESHAPS ☑ MACT

Mississippi Department of Environmental Quality
Office of Pollution Control

Pemits

PROGRAM	PERMIT TYPE	PERMIT #	MDEQ PERMIT CONTACT	ACTIVE
HAZ. WASTE	EPA ID	MSD008182081		NO
AIR	TITLE V	080000001	Ketchum, Brian	YES
AIR	SOP	080000001	Ketchum, Brian	NO
WATER	NPDES - MAJOR	MS0001830	Cook, Charles	NO
WATER	NPDES - MAJOR	MS0001830	Cook, Charles	NO
WATER	NPDES - MAJOR	MS0001830	Beasley, Jerry	YES
WATER	PRE-TREATMENT	MSP091286	Tomkins, Tracy	YES
GENERAL	SARA TITLE III	MSR110153	Lavallee, Louis	YES
AIR	TITLE V	0800-00001	Glenn, Montie	NO

Compliance Actions

MEDIA	ACTIVITY TYPE	SCHEDULED	COMPLETED	INSPECTED B
WATER	CEI - NA	3/17/99	3/17/99	Yassin, Mohammad
WATER	CMI - PRETREATMENT	11/1/99		Sharp, Loyd
WATER	CMI - NPDES	4/1/00		Sharp, Loyd
WATER	CMI - NPDES	11/1/99		Sharp, Loyd
WATER	CEI - NA	9/30/00		Yassin, Mohammad
HAZ WASTE	Compliance Evaluation Inspection	9/30/00		Yassin, Mohammad
AIR	State Compliance Inspection	9/30/00		Yassin, Mohammad
HAZ WASTE	Compliance Evaluation Inspection	6/30/99	6/30/99	Yassin, Mohammad
AIR	State Compliance Inspection	6/29/99	6/29/99	Yassin, Mohammad
WATER	CEI - NA	6/30/99	6/30/99	Yassin, Mohammad

MISSISSIPPI DEPARTMENT OF NATURAL RESOURCES
Bureau of Pollution Control
P.O. Box 10385
Jackson, Mississippi 39289-0385
(601) 961-5171

MEMORANDUM

TO: File

FROM: Jesse Thompson, Jr.

SUBJECT: Stack Test Review

DATE: June 8, 1989

DATA ENTERED

Facility No. 110-0800-00001-102

The review of the test submitted for the Flaking belt scrubber has been completed. The hot end of the Flaker was tested utilizing Method 25. The review did not reveal any problem. I recommend that the test be accepted.

JT:cm

BONNER ANALYTICAL TESTING COMPANY
RT. 14, BOX 509
HATTIESBURG, MS 39402
(601) 264-2854

EPA METHOD 25

VOLATILE ORGANIC CARBON

Facility Hercules, Inc.

Location 102 - Hot End of Flaker

Date 6/14/88 Operators JCP

Run # 1A
Bag # 001
Trap # 801

Barometric Press (in Hg) 30.19

Ambient Temp. (F) 95

Wet Bulb 82
Dry Bulb 106
% Moisture <1

Sample Train Leak Rate (<1 cc/min) <.1

Pretest Vacuum 30 in H_2O < 0.1 in/min Leakrate (<1.6 in/min)

Post Test Vacuum 30 in H_2O < 0.1 in/min Leakrate (<1.6 in/min)

DRY GAS METER

Meter # NA

Meter Coef: NA

Date Calibrated NA

	Time	Mass Flow	Source Volumetric Flow Data		
	Clock/Sample	Meter Reading	Dry Gas Meter: Cubic feet	Temp (F)	Static Press (in H_2O)
1	1355	100 cc/min			
1	1405	100 cc/min			
2	1415	100 cc/min			
3	1425	100 cc/min	SEE PITOT TRAVERSE		
4	1435	105 cc/min			
5	1445	105 cc/min			
6	1455	105 cc/min			
7					
8					
9					
10					
11					
12					
Total	60				
Average		102.5 cc/min (6.150)			

BONNER ANALYTICAL TESTING COMPANY
RT. 14, BOX 509
HATTIESBURG, MS 39402
(601) 264-2254

BYRON METHOD 25 Lab Data Sheet

FACILITY Hercules, Inc.

LOCATION 102 - HEF RUN #19

Bag I.D. 001
Volume Collected 6.150 Volume Analyzed 6.150
If changed, why

Trap I.D. 801
Volume Collected 6.150 Burnout Volume 0.225

BAG ANALYSIS

Date 6/15/88 Analyst JP/MSB

				Average
NMHC	698	668	693	683
CO	<3	<3	<3	<3
CO_2	365	365	372	368
CH_4	<3	<3	<3	<3

TRAP ANALYSIS

Date 6/16/88 Temperature 300 C Analyst JP/MSB

				Average
NMHC	<3	<3	<3	<3
CO	<3	<3	<3	<3
CO_2	109	120	117	115
CH_4	<3	<3	<3	

General Comments

VOC = volatile organic carbon - This is the sum of the VOC collected in the trap plus any VOC that passes through the trap into the bag. In the analysis the bag portion is the BAG NMHC (nonmethane hydrocarbon) & the trap is burned out and all the VOC converted to carbon dioxide prior to analysis thus the trap portion is the TRAP CO_2.

$$VOC_A \text{ lb/hr} = \frac{(VOC\ BAG_{ave} + VOC\ TRAP_{ave})\ SCFM}{32 \times 10^5}$$

$$VOC_A \text{ lb/hr} = \frac{(\ 683\ \text{bag} + \ 115\ \text{trap})\ 406603\ \text{SCFM}}{32 \times 10^5}$$

$$VOC_A = \boxed{\ 10.14\ \text{lb/hr}}$$

BONNER ANALYTICAL TESTING COMPANY
RT. 14, BOX 509
HATTIESBURG, MS 39402
(601) 264-2854

Facility Hercules, Inc. Location 103 - Hot End Flaker

Date 6/14/88 Run Number 1

Stack Diameter or Dimensions, n(in.) 28" X 28"

Barometric Pressure (in. Hg) 30.19 Ambient Temp (F) 95

Cross Sectional Area, (ft^2) 5.44 Operators JP/MBB

Pitot Tube I.D. Number 001

Avg. Coefficient, Cp = 1.50
Last Date Calibrated 6/10/88

SCHEMATIC OF STACK CROSS SECTION

Traverse Pt.No.	Vel. Hd., Δp (in.) H_2O	Stack Temperature t_s (C)	Ps (in.-g)	Δp o.s
1	0.19	106		
2	0.20	106		
3	0.19	106		
4	0.20	106		
5	0.24	106		
6	0.20	106		
7	0.22	106		
8	0.19	106		
9	0.20	106		
10	0.22	106		
11	0.05	106		
12	0.04	106		
13	0.02	105		
14	0.07	105		
15	0.04	105		
16	0.03	105		
17	0.04	106		
18	0.03	106		
19	0.06	106		
20	0.03	106		
21	0.03	106		
22	0.03	106		
23	0.03	106		
24	0.04	106		
25	0.03	107		
Average	0.1068	106 F (541 R)	30.19	0.327

BONNER ANALYTICAL TESTING COMPANY
RT. 14, BOX 309
HATTIESBURG, MS 39402
(601) 264-2854

EPA METHOD 25

VOLATILE ORGANIC CARBON

Facility Hercules, Inc.

Location 102 - Hot End Flaker

Date 5/14/98 Operators JCP

Run # 2A
Bag # 002
Trap # 002

Barometric Press (in Hg) 30.19

Ambient Temp. (F) 96

Wet Bulb 82
Dry Bulb 106
% Moisture <1

Sample Train Leak Rate (<1 cc/min) <1

Pretest Vacuum 30 in H_2O < 0.1 in/min Leakrate (<1.6 in/min)

Post Test Vacuum 30 in H_2O < 0.1 in/min Leakrate (<1.6 in/min)

DRY GAS METER

Meter # NA

Meter Coef: NA

Date Calibrated NA

	Time	Mass Flow	Source Volumetric Flow Data		
	Clock/Sample	Meter Reading	Cubic feet	Dry Gas Meter Temp(F)	Static Press (in H_2O)
0	1505				
1	1515	105 cc/min			
2	1525	105 cc/min			
3	1535	105 cc/min	SEE PITOT TRAVERSE		
4	1545	105 cc/min			
5	1555	105 cc/min			
6	1605	105 cc/min			
7					
8					
9					
10					
11					
12					
Total	60				
Average		105 cc/min (6.300)			

BONNER ANALYTICAL TESTING COMPANY
RT. 14, BOX 509
HATTIESBURG, MS 39402
(601) 264-2854

BYRON METHOD 25 Lab Data Sheet

FACILITY Hercules, Inc.

LOCATION 102 - Hot End Flaker RUN 2A

Bag I.D. 002
Volume Collected 6.300 Volume Analyzed 6.300
if changed, why

Trap I.D. 802
Volume Collected 6.300 Burnout Volume 6.500

BAG ANALYSIS

Date 6/16/98 Analyst JP/MSB

				Average
NMHC	166	162	159	162
CO	<3	<3	<3	<3
CO_2	344	365	353	354
CH_4	<3	<3	<3	<3

TRAP ANALYSIS

Date 6/16/98 Temperature 300 C Analyst JP/MSB

				Average
NMHC	<3	<3	<3	<3
CO	<3	<3	<3	<3
CO_2	91	95	95	94
CH_4	<3	<3	<3	

General Comments

VOC = volatile organic carbon - This is the sum of the VOC collected in the trap plus any VOC that passes through the trap into the bag. In the analysis the bag portion is the BAG NMHC (nonmethane hydrocarbon); the trap is burned out and all the VOC converted to carbon dioxide prior to analysis thus the trap portion is the TRAP CO_2.

$$VOC_A \text{ lb/hr} = \frac{(\text{VOC BAG}_{avg} + \text{VOC TRAP}_{avg})\ \text{SCFH}}{32 \times 10^6}$$

$$VOC_A \text{ lb/hr} = \frac{(162 \text{ bag} + 94 \text{ trap})\ 428284\ \text{SCFH}}{32 \times 10^6}$$

VOC_A = 2.40 lb/hr.

BONNER ANALYTICAL TESTING COMPANY
RT. 14, BOX 509
HATTIESBURG, MS 39402
(601) 264-2954

Facility Hercules, Inc. Location 102 - Wet End Flaker

Date 6/14/88 Run Number 2A

Stack Diameter or Dimensions, m(in.) 28" X 28"

Barometric Pressure (in. Hg) 30.19 Ambient Temp (F) 95

Cross Sectional Area, (ft_s) 5.44 ft.2 Operators DP/MSB

Pitot Tube I.D. Number 0.001

Avg. Coefficient, Cp = 1.00
Last Date Calibrated 6/16/88

SCHEMATIC OF STACK CROSS SECTION

Traverse Pt.No.	Vel. Hd., Δp (in.) H_2O	Stack Temperature t_s (C)	P_s (in.Hg)	Δp o.s
1	0.20	104		
2	0.19	105		
3	0.19	105		
4	0.22	106		
5	0.24	106		
6	0.21	106		
7	0.22	106		
8	0.19	106		
9	0.22	105		
10	0.20	106		
11	0.07	106		
12	0.05	106		
13	0.09	106		
14	0.09	106		
15	0.05	106		
16	0.05	106		
17	0.09	105		
18	0.05	106		
19	0.06	106		
20	0.03	105		
21	0.01	105		
22	0.05	105		
23	0.06	106		
24	0.05	106		
25	0.03	106		
Average	0.117	106 F (566 R)	30.19	0.342

Facility Hercules, Inc.

Location 102 - Hot End of Flaker

Stack Gas Velocity (Vs) avg. sec.

$$(Vs)_{avg.} = K_p C_p \frac{(\Delta P)^{0.5}}{(P_s M_s)} \left((T_s)_{avg.}\right)^{0.5}$$

Run

1. = (85.49) (1.0) (0.327) (0.797)

= 22.280

2. = (85.49) (1.0) (0.342) (0.797)

= 23.302

3. = (85.49) (1.0) (0.343) (0.797)

= 23.370

Stack Gas Volumetric Flow Rate (std. cond.) Q_s $\frac{ft.^3}{hr.}$

$$3600\ (1-B_{wo})\ V_s A \frac{(T_{std.})}{(T_s)_{avg.}} \frac{(P_s)}{P_{std.}}$$

1. $= (3600)(0.99)(22.280)(5.44)\left(\frac{528 \times 30.19}{566 \times 29.92}\right)$

Q_s = 406,603

2. $= (3600)(0.99)(23.302)(5.44)\frac{(528)(30.19)}{(566)(29.92)}$

Q_s = 425,254

3. $= (3600)(0.99)(23.370)(5.44)\left(\frac{528 \times 30.19}{566 \times 29.92}\right)$

Q_s = 426,495

BONNER ANALYTICAL TESTING COMPANY
RT. 14, BOX 309
HATTIESBURG, MS 39402
(601) 264-2854

EPA METHOD 25

VOLATILE ORGANIC CARBON

Facility Hercules, Inc.

Location 102 - Wet End Flaker

Date 6/14/88 Operators JCP

Run # 3A
Bag # 003
Trap # 803

Barometric Press (in Hg) 30.19

Ambient Temp. (F) 95

Wet Bulb 82
Dry Bulb 106
% Moisture <1

Sample Train Leak Rate (<1 cc/min) <.1

Pretest Vacuum 30 in H_2O < 0.1 in/min Leakrate (<1.6 in/min)

Post Test Vacuum 30 in H_2O < 0.1 in/min Leakrate (<1.6 in/min)

DRY GAS METER

Meter # NA

Meter Coef: NA

Date Calibrated NA

	Time	Mass Flow	Source Volumetric Flow Data		
			Dry Gas Meter		Static
	Clock/Sample	Meter Reading	Cubic feet	Temp(F)	Press (in H_2O)
0	1610				
1	1620	105 cc/min			
2	1630	105 cc/min			
3	1640	105 cc/min	SEE PITOT TRAVERSE		
4	1650	105 cc/min			
5	1700	105 cc/min			
6	1710	105 cc/min			
7					
8					
9					
10					
11					
12					

Total 60

Average 105 cc/min (.100)

BONNER ANALYTICAL TESTING COMPANY
RT. 14, BOX 509
HATTIESBURG, MS 39402
(601) 264-2854

BYRON METHOD 25 Lab Data Sheet

FACILITY Hercules, Inc.

LOCATION 102 - Hot End Flaker RUN 3A

Bag I.D. 003
Volume Collected 6.300 Volume Analyzed 6.300
if changed, why

Trap I.D. 003
Volume Collected 6.300 Burnout Volume 7.900

BAG ANALYSIS

Date 6/16/88 Analyst JP/MSB

				Average
NMHC	4.2	4.9	4.9	4.7
CO	<3	<3	<3	<3
CO_2	409	355	371	378
CH_4	<3	<3	<3	<3

TRAP ANALYSIS

Date 6/16/88 Temperature 300 C Analyst JP/MSB

				Average
NMHC	<3	<3	<3	<3
CO	<3	<3	<3	<3
CO_2	445	461	456	454
CH_4	<3	<3	<3	

General Comments

VOC = volatile organic carbon - This is the sum of the VOC collected in the trap plus any VOC that passes through the trap into the bag. In the analysis the bag portion is the BAG NMHC (nonmethane hydrocarbon); the trap is burned out and all the VOC converted to carbon dioxide prior to analysis thus the trap portion is the TRAP CO_2.

$$VOC_t \text{ lb/hr} = \frac{(VOC\ BAG_{ave} + VOC\ TRAP_{ave})\ SCFM}{32 \times 10^6}$$

$$VOC_t \text{ lb/hr} = \frac{(4.7 \text{ bag} + 454 \text{ trap})\ 424495 \text{ SCFM}}{32 \times 10^6}$$

VOC_t = 4.11 lb/hr.

BONNER ANALYTICAL TESTING COMPANY
RT. 14, BOX 509
HATTIESBURG, MS 39402
(601) 264-2854

Facility Hercules, Inc. Location 102 - Wet End Flaker

Date 6/14/88 Run Number 3A

Stack Diameter or Dimensions, n(in.) 28" X 22"

Barometric Pressure (in. Hg) 30.19 Ambient Temp (F) 76

Cross Sectional Area, (ft_2) 5.44 $ft.^2$ Operators JP/WSB

Pitot Tube I.D. Number 001

Avg. Coefficient, Cp = 1.00
Last Date Calibrated 6/14/88

SCHEMATIC OF STACK CROSS SECTION

Traverse Pt.No.	Vel. Hd., Δp (in.) H_2O	Stack Temperature t_s (C)	P_s (in.-g)	Δp o.s
1	0.23	105		
2	0.20	105		
3	0.20	105		
4	0.21	105		
5	0.20	106		
6	0.19	106		
7	0.18	106		
8	0.19	106		
9	0.18	106		
10	0.17	107		
11	0.11	107		
12	0.09	106		
13	0.10	106		
14	0.06	106		
15	0.05	106		
16	0.09	106		
17	0.09	106		
18	0.08	107		
19	0.06	107		
20	0.02	107		
21	0.03	106		
22	0.07	105		
23	0.07	105		
24	0.06	105		
25	0.03	105		
Average	0.118	106 F (566 R)	30.19	0.340

RT. 14, BOX 509
HATTIESBURG, MS 39402
(601) 264-2854

EPA METHOD 25

VOLATILE ORGANIC CARBON

Facility Hercules

Location 102 Hot End Flaker

Date 6-14-88 Operators JCP

Run # 1A
Bag # 001
Trap # 801

Barometric Press (in Hg) 30.14

Ambient Temp. (F) 95

Wet Bulb 28°C 82°F
Dry Bulb 41°C 106°F
% Moisture <1

Sample Train Leak Rate ((1 cc/min) <.1 cc/m

Pretest Vacuum 30 in H_2O <0.1 "Hg min Leakrate ((1.6 in/min)

Post Test Vacuum 30 in H_2O <0.1 Leakrate ((1.6 in/min)

DRY GAS METER

Meter # N/A

Meter Coef: N/A

Date Calibrated N/A

	Time Clock/Sample	Mass Flow Meter Reading	Source Volumetric Flow Data: Cubic feet	Dry Gas Meter Temp(F)	Static Press (in H_2O)
I	1355	100 CC/min			
1	1405	100			
2	1415	100	See	Pitot	Traverse
3	1425	100			
4	1435	105			
5	1444	105			
6	1455	105			
7					
8					
9					
10					
11					
12					
Total	60				
Average		102.5			
		6.150			

BONNER ANALYTICAL TESTING COMPANY
RT. 14, BOX 509
HATTIESBURG, MS 39402
(601) 264-2854

BYRON METHOD 25 Lab Data Sheet

FACILITY Hercules Inc

LOCATION 102 Hot End of Flakur RUN 1A

1A

Bag I.D. 001
Volume Collected 6.150 Volume Analyzed 6.150
if changed, why

Trap I.D. 801
Volume Collected 6.150 Burnout Volume 5.225

BAG ANALYSIS

Date 06/15/88 Analyst MSB/JP

				Average
NMHC	688	668	693	683
CO	<3	<3	<3	<3
CO_2	365	368	372	368
CH_4	<3	<3	<3	<3

TRAP ANALYSIS

Date 06/16/88 Temperature 300°C Analyst MSB/JP

				Average
NMHC	<3	<3	<3	<3
CO	<3	<3	<3	<3
CO_2	109	120	117	115
CH_4	<3	<3	<3	<3

General Comments

VOC = volatile organic carbon - This is the sum of the VOC collected in the trap plus any VOC that passes through the trap into the bag. In the analysis the bag portion is the BAG NMHC (nonmethane hydrocarbon); the trap is burned out and all the VOC converted to carbon dioxide prior to analysis thus the trap portion is the TRAP CO_2.

$$VOC_t \text{ lb/hr} = \frac{(VOC\ BAG_{ave} + VOC\ TRAP_{ave})\ SCFH}{32 \times 10^6}$$

$$VOC_t \text{ lb/hr} = \frac{(683 \text{ bag} + 115 \text{ trap})\ 406603\ SCFH}{32 \times 10^6}$$

VOC_t = 10.14 lb/hr

RT. 14, BOX 509
HATTIESBURG, MS 39402
(601) 264-2854

Facility Hercules Inc Location 102 Hot End of Flake

Date 6/14/88 Run Number 1

Stack Diameter or Dimensions, m(in.) 28" x 28"

Barometric Pressure (in. Hg) 30.19 Ambient Temp (F) 95

Cross Sectional Area, (ft^2) 5.44 Operators JP/MSB

Pitot Tube I.D. Number 001

Avg. Coefficient, Cp = 1.00
Last Date Calibrated 06/10/88

SCHEMATIC OF STACK CROSS SECTION

Traverse Pt.No.	Vel. Hd., Dp (In.) H_2O	Stack Temperature t_s (F)	P_s (in.Hg)	Dp o.s
1	0.19	106		
2	0.20	106		
3	0.19	106		
4	0.20	106		
5	0.24	106		
6	0.20	106		
7	0.22	106		
8	0.19	106		
9	0.20	106		
10	0.22	106		
11	0.05	106		
12	0.04	106		
13	0.05	105		
14	0.07	105		
15	0.04	105		
16	0.05	105		
17	0.04	106		
18	0.03	106		
19	0.06	106		
20	0.03	106		
21	0.03	106		
22	0.03	106		
23	~~0.04~~ 0.03	106		
24	0.04	106		
25	0.03	107	30.19	0.327
Average	0.1068	106	566R	

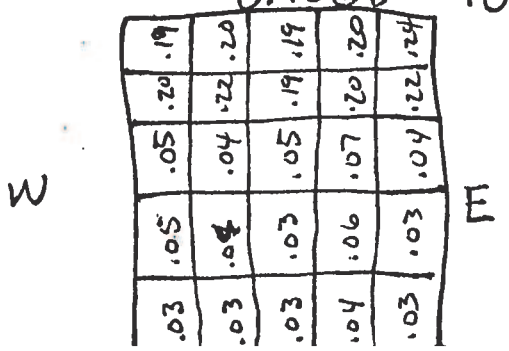

BONNER ANALYTICAL TESTING COMPANY
RT. 14, BOX 509
HATTIESBURG, MS 39402
(601) 264-2854

EPA METHOD 25

VOLATILE ORGANIC CARBON

Facility Hercules

Location 102 Hot End Flakes

Date 6-14-88 Operators Tom

Run # 2-A
Bag # 002
Trap # 802

Barometric Press (in Hg) 30.19

Ambient Temp. (F) 96

Wet Bulb 28°C 82°F
Dry Bulb 41°C 106°F
% Moisture

Sample Train Leak Rate ((1 cc/min) <1

Pretest Vacuum 30 in H_2O <0.1 Leakrate ((1.6 in/min)

Post Test Vacuum 30 in H_2O <0.1 Leakrate ((1.6 in/min)

DRY GAS METER

Meter # NA

Meter Coef: NA

Date Calibrated NA

	Time Clock/Sample	Mass Flow Meter Reading	Source Volumetric Flow Data: Cubic feet	Dry Gas Meter Temp(F)	Static Press (in H_2O)
I	~~1425~~ 1505	—			
1	1515	105			
2	1525	105	SEE	Pitot	TRAVERSE
3	1535	105			
4	1545	105			
5	1555	105			
6	1605	105			
7					
8					
9					
10					
11					
12					
Total	60				
Average		105			

TOTAL (Vacuum) 6.300

BONNER ANALYTICAL TESTING COMPANY
RT. 14, BOX 509
HATTIESBURG, MS 39402
(601) 264-2854

BYRON METHOD 25 Lab Data Sheet

FACILITY Hercules Inc

LOCATION 102 Hot End of Elder RUN 2A

Bag I.D. 002
Volume Collected 6.300 Volume Analyzed 6.300
if changed, why

Trap I.D. 802
Volume Collected 6.300 Burnout Volume 6.800

BAG ANALYSIS Date 06/16/88 Analyst MSB/JP

				Average
NMHC	166	162	159	162
CO	<3	<3	<3	<3
CO_2	344	365	353	354
CH_4	<3	<3	<3	<3

TRAP ANALYSIS

Date 06/16/88 Temperature 300°C Analyst MSB/JP

				Average
NMHC	<3	<3	<3	<3
CO	<3	<3	<3	<3
CO_2	91	95	95	94
CH_4	<3	<3	<3	<3

General Comments

VOC = volatile organic carbon - This is the sum of the VOC collected in the trap plus any VOC that passes through the trap into the bag. In the analysis the bag portion is the BAG NMHC (nonmethane hydrocarbon); the trap is burned out and all the VOC converted to carbon dioxide prior to analysis thus the trap portion is the TRAP CO_2.

$$VOC_t \text{ lb/hr} = \frac{(VOC\ BAG_{ave} + VOC\ TRAP_{ave})\ SCFH}{32 \times 10^6}$$

$$VOC_t \text{ lb/hr} = \frac{(162 \text{ bag} + 94 \text{ trap})\ 475\,254 \text{ SCFH}}{32 \times 10^6}$$

VOC_t = 340

RT. 14, BOX 509
HATTIESBURG, MS 39402
(601) 264-2854

EPA METHOD 25

VOLATILE ORGANIC CARBON

Facility Hercules

Location 102 Hot End Flaker

Date 6-14-88 Operators Joe

Run # 3-A
Bag # 003
Trap # 803

Barometric Press (in Hg) 30.19

Ambient Temp. (F) 95°

Wet Bulb 28°C 82°F
Dry Bulb 41°C 106°F
% Moisture

Sample Train Leak Rate ((1 cc/min) < .1 cc/m

Pretest Vacuum 30 in H_2O <0.1"WS/min Leakrate ((1.6 in/min)

Post Test Vacuum 30 in H_2O <0.1 Leakrate ((1.6 in/min)

DRY GAS METER

Meter # N/A

Meter Coef: NA

Date Calibrated NA

	Time Clock/Sample	Mass Flow Meter Reading	Source Volumetric Flow Data: Cubic feet	Dry Gas Meter Temp(F)	Static Press (in H_2O)
I	1610	105 cc/m			
1	1620	105			
2	1630	105	SEE Pitot	TRAVERSE	
3	1640	105			
4	1650	105			
5	1700	105			
6	1710	105			
7					
8					
9					
10					
11					
12					
Total					
Average		105			

6,300

BONNER ANALYTICAL TESTING COMPANY
RT. 14, BOX 509
HATTIESBURG, MS 39402
(601) 264-2854

BYRON METHOD 25 Lab Data Sheet

FACILITY Hercules Inc

LOCATION 102 Hot End of Baker RUN 3

3A

Bag I.D.
Volume Collected 003 Volume Analyzed
if changed, why

Trap I.D. 803
Volume Collected 6.300 Burnout Volume 7900

BAG ANALYSIS Date 06/16/88 Analyst MSB/SP

				Average
NMHC	4.2	4.9	4.9	4.7
CO	<3	<3	<3	<3
CO_2	409	355	371	378
CH_4	<3	<3	<3	<3

TRAP ANALYSIS Date 06/16/88 Temperature 300°C Analyst MSB/SP

				Average
NMHC	<3	<3	<3	<3
CO	<3	<3	<3	<3
CO_2	445	461	456	454
CH_4	<3	<3	<3	<3

General Comments

VOC = volatile organic carbon - This is the sum of the VOC collected in the trap plus any VOC that passes through the trap into the bag. In the analysis the bag portion is the BAG NMHC (nonmethane hydrocarbon); the trap is burned out and all the VOC converted to carbon dioxide prior to analysis thus the trap portion is the TRAP CO_2.

$$VOC_t \text{ lb/hr} = \frac{(VOC\ BAG_{ave} + VOC\ TRAP_{ave})\ SCFH}{32 \times 10^6}$$

$$VOC_t \text{ lb/hr} = \frac{(4.7 \text{ bag} + 454 \text{ trap})\ 42695\ SCFH}{32 \times 10^6}$$

VOC_t = (0.11

EXAMINER ANALYTICAL TESTING COMPANY
RT. 14, BOX 509
HATTIESBURG, MS 39402
(601) 264-2854

Facility Hercules Inc Location 102 Hot End of Flaker

Date 06/14/88 Run Number 3

Stack Diameter or Dimensions, m(in.) 28" x 28"

Barometric Pressure (in. Hg) 30.19 Ambient Temp (F) 96

Cross Sectional Area, (ft^2) 5.44 Operators MSB/JP

Pitot Tube I.D. Number 001

Avg. Coefficient, Cp 1.00
Last Date Calibrated 06/14/88

SCHEMATIC OF STACK CROSS SECTION

Traverse Pt.No.	Vel. Hd., Dp (in.) H_2O	Stack Temperature t_s (F)	P_s (in.Hg)	Dp o.s
1	0.23	105		
2	0.20	105		
3	0.20	105		
4	0.21	105		
5	0.20	106		
6	0.19	106		
7	0.18	106		
8	0.19	106		
9	0.18	106		
10	0.17	107		
11	0.11	107		
12	0.09	106		
13	0.10	106		
14	0.06	106		
15	0.05	106		
16	0.09	106		
17	0.09	107		
18	0.05	107		
19	0.06	107		
20	0.02	106		
21	0.03	106		
22	0.07	105		
23	0.07	105		
24	0.05	105		
Average	0.03 / 0.118	105	30.19	0.343

106°F 566°R

.23	.20	.20	.21	.20
.19	.18	.19	.18	.17
0.11	0.09	0.10	0.06	0.05
09	09	05	06	0.02
0.03	0.07	0.01	0.05	.03

W E

MISSISSIPPI DEPARTMENT OF NATURAL RESOURCES
Bureau of Pollution Control
P.O. Box 10385
Jackson, Mississippi 39289-0385
(601) 961-5171

MEMORANDUM

TO: File

FROM: Jesse Thompson, Jr.

SUBJECT: Stack Test Review

DATE: June 8, 1989



Facility No. 110-0800-00001-112

The review of the test performed on the Hydrogen Process at Hercules has been finished. The review did not reveal any problems. The emission point was tested using Method 25. I recommend that the test be accepted.

JT:cm

BONNER ANALYTICAL TESTING COMPANY
RT. 14, BOX 509
HATTIESBURG, MS 39402
(601) 264-2854

EPA METHOD 25

VOLATILE ORGANIC CARBON

Facility Hercules, Inc. - Hattiesburg, MS

Location 112 - Hydrogen Process

Date 5/24/88 Operators JP/MSB

Run # 1
Bag # 008
Trap # 008

Barometric Press (in Hg) 30.06

Ambient Temp. (F) 83

Wet Bulb 84 C
Dry Bulb 87 C
% Moisture <1

Sample Train Leak Rate (<1 cc/min) <1.0 cc/min

Pretest Vacuum 30 in H_2O 0.25 in/min Leakrate (<1.6 in/min)

Post Test Vacuum 30 in H_2O 0.25 in/min Leakrate (<1.6 in/min)

Stack Dia 0.5'
Stack Area 0.196

	Time Clock/Sample	Mass Flow Meter Reading	Source Volumetric Flow Data: ft/min	Dry Gas Meter Temp (F)	Static Press (in H_2O)
I	0945	100 cc/min			
1	0955	100 cc/min	113	83	
2	1008	100 cc/min	115	83	
3	1015	100 cc/min	164	83	
4	1025	100 cc/min	164	87	
5	1035	100 cc/min	166	87	
6	1045	100 cc/min	166	87	
7					
8					
9					
10					
11					
12					
Total			148 ft/min		
Average		100 cc/min	2.66 7ft/sec	85 (545R)	30.06

BONNER ANALYTICAL TESTING COMPANY
RT. 14, BOX 509
HATTIESBURG, MS 39402
(601) 264-2854

BYRON METHOD 25 Lab Data Sheet

FACILITY Hercules, Inc.

LOCATION 112 Hydrogen Process RUN # 1

Bag I.D. 008
Volume Collected 6.000 Volume Analyzed 6.000
if changed, why

Trap I.D. 009
Volume Collected 6.000 Burnout Volume 5.000

BAG ANALYSIS

Date 5/30/88 Analyst MSB/JP

				Average
NMHC	1609	1642	1636	1629
CO	4624	4580	4600	4601
CO_2	10582	10380	10920	10627
CH_4	21343	21780	20920	21348

TRAP ANALYSIS

Date 5/29/88 Temperature 300 C Analyst MSB/JP

				Average
NMHC	<3	<3	<3	<3
CO	<3	<3	<3	<3
CO_2	1188	1168	1205	1187
CH_4	<3	<3	<3	<3

General Comments

VOC = volatile organic carbon - This is the sum of the VOC collected in the trap plus any VOC that passes through the trap into the bag. In the analysis the bag portion is the BAG NMHC (nonmethane hydrocarbon); the trap is burned out and all the VOC converted to carbon dioxide prior to analysis thus the trap portion is the TRAP CO_2.

$$VOC_+ \text{ lb/hr} = \frac{(\text{VOC BAG}_{avg} + \text{VOC TRAP}_{avg})\ SCFH}{32 \times 10^6}$$

$$VOC_+ \text{ lb/hr} = \frac{(1629 \text{ bag} + 1187 \text{ trap})\ 1677\ SCFH}{32 \times 10^6}$$

VOC_+ = 0.147 lb/hr.

BONNER ANALYTICAL TESTING COMPANY
RT. 14, BOX 509
HATTIESBURG, MS 39402
(601) 264-2854

EPA METHOD 25

VOLATILE ORGANIC CARBON

Facility Hercules, Inc. - Hattiesburg, MS

Location 112 - Hydrogen Process

Date 5/24/89 Operators JP/MSB

Run # 2
Bag # 004
Trap # 004

Barometric Press (in Hg) 30.06

Ambient Temp. (F) 86

Wet Bulb 85 C
Dry Bulb 88 C
% Moisture <1

Sample Train Leak Rate (<1 cc/min) <1.0 cc/min

Pretest Vacuum 30 in H_2O 0.30 in/min Leakrate (<1.6 in/min)

Post Test Vacuum 30 in H_2O 0.30 in/min Leakrate (<1.6 in/min)

	Time	Mass Flow	Source Volumetric Flow Data		
				Dry Gas Meter	Static
	Clock/Sample	Meter Reading	ft/min	Temp (F)	Press (in H_2O)
I	1050	130 cc/min			
1	1100	130 cc/min	163	88	
2	1110	130 cc/min	163	88	
3	1120	130 cc/min	168	88	
4	1130	130 cc/min	168	88	
5	1140	130 cc/min	164	88	
6	1150	130 cc/min	164	88	
7					
8					
9					
10					
11					
12					
Total	60		165 ft/min		
			2.75 ft/sec		
Average		130 cc/min		88 (548R)	30.06

BONNER ANALYTICAL TESTING COMPANY
RT. 14, BOX 509
HATTIESBURG, MS 39402
(601) 264-2854

BYRON METHOD 25 Lab Data Sheet

FACILITY Hercules, Inc.

LOCATION 112 Hydrogen Process RUN # 2

Bag I.D. 004
Volume Collected 7.800 Volume Analyzed 7.800
if changed, why

Trap I.D. 004
Volume Collected 7.800 Burnout Volume 5.000

BAG ANALYSIS

Date 5/30/88 Analyst MSB/JP

				Average
NMHC	2613	2588	2580	2594
CO	5406	5375	5385	5389
CO_2	11442	11316	11213	11324
CH_4	22834	22390	22415	22546

TRAP ANALYSIS

Date 5/29/88 Temperature 300 C Analyst MSB/JP

				Average
NMHC	<3	<3	<3	<3
CO	<3	<3	<3	<3
CO_2	5708	5755	5768	5744
CH_4	<3	<3	<3	<3

General Comments

VOC = volatile organic carbon - This is the sum of the VOC collected in the trap plus any VOC that passes through the trap into the bag. In the analysis the bag portion is the BAG NMHC (nonmethane hydrocarbon); the trap is burned out and all the VOC converted to carbon dioxide prior to analysis thus the trap portion is the TRAP CO_2.

$$VOC_+ \text{ lb/hr} = \frac{(VOC\ BAG_{ave} + VOC\ TRAP_{ave})\ SCFH}{32 \times 10^6}$$

$$VOC_+ \text{ lb/hr} = \frac{(2594 \text{ bag} + 5744 \text{ trap})\ 1859\ SCFH}{32 \times 10^6}$$

VOC_+ = 0.484 lb/hr.

BONNER ANALYTICAL TESTING COMPANY
RT. 14, BOX 509
HATTIESBURG, MS 39402
(601) 264-2854

EPA METHOD 25

VOLATILE ORGANIC CARBON

Facility Hercules, Inc. - Hattiesburg, MS

Location 112 - Hydrogen Process

Date 5/24/88 Operators JP/MSB

Run # 3
Bag # 035
Trap # 035

Barometric Press (in Hg) 30.06

Ambient Temp. (F) 88

Wet Bulb 87 C
Dry Bulb 90 C
% Moisture <1

Sample Train Leak Rate (<1 cc/min) <1.0 cc/min

Pretest Vacuum 30 in H_2O 0.30 in/min Leakrate (<1.6 in/min)

Post Test Vacuum 30 in H_2O 0.30 in/min Leakrate (<1.6 in/min)

	Time	Mass Flow	Source Volumetric Flow Data		
				Dry Gas Meter	Static
	Clock/Sample	Meter Reading	Cubic feet	Temp (F)	Press (in H_2O)
I	1155	100 cc/min			
1	1205	100 cc/min	176	90	
2	1215	100 cc/min	176	90	
3	1225	100 cc/min	176	90	
4	1235	100 cc/min	180	90	
5	1245	100 cc/min	180	90	
6	1255	100 cc/min	180	90	
7					
8					
9					
10					
11					
12					
Total	60		178 ft/min		
Average		100 cc/min	2.967 ft/sec	90 (550R)	(30.06)

BONNER ANALYTICAL TESTING COMPANY
RT. 14, BOX 509
HATTIESBURG, MS 39402
(601) 264-2854

BYRON METHOD 25 Lab Data Sheet

FACILITY Hercules, Inc.

LOCATION 112 Hydrogen Process RUN # 3

Bag I.D. 035
Volume Collected 6.000 Volume Analyzed 6.000
if changed, why

Trap I.D. 035
Volume Collected 6.000 Burnout Volume 6.250

BAG ANALYSIS

Date 5/30/88 Analyst MSB/JP

				Average
NMHC	3755	3815	3795	3788
CO	5603	5705	5693	5667
CO_2	11656	11880	11453	11663
CH_4	22659	23110	23009	22926

TRAP ANALYSIS

Date 5/29/88 Temperature 300 C Analyst MSB/JP

				Average
NMHC	<3	<3	<3	<3
CO	<3	<3	<3	<3
CO_2	1799	1856	1834	1830
CH_4	<3	<3	<3	<3

General Comments

VOC = volatile organic carbon - This is the sum of the VOC collected in the trap plus any VOC that passes through the trap into the bag. In the analysis the bag portion is the BAG NMHC (nonmethane hydrocarbon); the trap is burned out and all the VOC converted to carbon dioxide prior to analysis thus the trap portion is the TRAP CO_2.

$$VOC_+ \text{ lb/hr} = \frac{(\text{VOC BAG}_{avg} + \text{VOC TRAP}_{avg})\ \text{SCFH}}{32 \times 10^6}$$

$$VOC_+ \text{ lb/hr} = \frac{(3788 \text{ bag} + 1830 \text{ trap})\ 2006\ \text{SCFH}}{32 \times 10^6}$$

$$VOC_+ = \boxed{0.352 \text{ lb/hr.}}$$

Facility Hercules, Inc.

Location 112 Hydrogen Process

Stack Gas Velocity (vs) avg. sec.

$$(Vs)avg. = KpCp \quad (\Delta P)^{0.5} \quad ((Ts)avg.)^{0.5}$$

RUN

1 =

= |2.467|

2 =

= |2.75 |

3 =

= |2.967|

Stack Gas Volumetric Flow Rate (std.conc.) Qs $\frac{ft.^3}{hr.}$

$$3600\ (1-Bwo)\ VsA \quad \frac{(Tstd.)}{(Ts)avg.} \quad \frac{(\ Ps\ )}{Pstd.}$$

RUN

1 = $(3600)\ (0.99)\ (2.467)\ (0.196)\ \frac{528\ X\ 30.06}{545\ X\ 29.92}$

= | 1677 $\frac{ft^3}{hr}$ |

2 = $(3600)\ (0.99)\ (2.75)\ (0.196)\ \frac{528\ X\ 30.06}{548\ X\ 29.92}$

= | 1859 $\frac{ft^3}{hr}$ |

3 = $(3600)\ (0.99)\ (2.967)\ (0.196)\ \frac{528\ X\ 30.06}{548\ X\ 29.92}$

= | 2006 $\frac{ft^3}{hr}$ |

BONNER ANALYTICAL TESTING COMPANY
RT. 14, BOX 509
HATTIESBURG, MS 39402
(601) 264-2854

P.B.S

EPA METHOD 25

VOLATILE ORGANIC CARBON

Facility HER. INC

Location H2 - Hydrogen Process

Date 5/24/88 Operators JP/MSD

Run # 1
Bag # 008
Trap # 008

Barometric Press (in Hg) 30.06

Ambient Temp. (F) 83

Wet Bulb 84
Dry Bulb ~~83~~ 87
% Moisture <1

Sample Train Leak Rate (<1 cc/min) <1

Pretest Vacuum 30 in H_2O 0.25 in/min Leakrate (<1.6 in/min)

Post Test Vacuum 30 in H_2O 0.25 in/min Leakrate (<1.6 in/min)

Stack Dia 0.5'
Stack Area 0.196

DRY GAS METER

Meter # NA

Meter Coef:

Date Calibrated

	Time Clock/Sample	Mass Flow Meter Reading	Source Volumetric Flow Data: Ft/Min ~~Cubic feet~~	Dry Gas Meter Temp(F)	Static Press (in H_2O)
I	0945	100			
1	0955	100	113	83	
2	1005	100	115	83	
3	1015	100	164	83	
4	1025	100	164	87	
5	1035	100	166	87	
6	1045	100	166	87	
7	~~10~~				
8					
9					
10					
11					
12					
Total			148 Ft/Min		
Average		100 cc/min	2.667 Ft/Sec	85 (545R)	30.06

BONNER ANALYTICAL TESTING COMPANY
RT. 14, BOX 509
HATTIESBURG, MS 39402
(601) 264-2854

BYRON METHOD 25 Lab Data Sheet

FACILITY Hercules

LOCATION 112-Hydrogen Process RUN 1

Bag I.D. 008
Volume Collected 6,000 Volume Analyzed 6000
if changed, why

Trap I.D. 008
Volume Collected 6.000 Burnout Volume 5.000

BAG ANALYSIS Date 5/30/88 Analyst JP/MSB

				Average
NMHC	1609	1642	1636	1629
CO	4624	4580	4600	4601
CO_2	10582	10380	10920	10627
CH_4	21343	21780	20920	21348

TRAP ANALYSIS

Date 5/29/88 Temperature 300 Analyst JP/MSB

				Average
NMHC	<3	<3	<3	<3
CO	<3	<3	<3	<3
CO_2	1188	1168	1208	1187
CH_4	<3	<3	<3	<3

General Comments

VOC = volatile organic carbon - This is the sum of the VOC collected in the trap plus any VOC that passes through the trap into the bag. In the analysis the bag portion is the BAG NMHC (nonmethane hydrocarbon); the trap is burned out and all the VOC converted to carbon dioxide prior to analysis thus the trap portion is the TRAP CO_2.

$$VOC_t \text{ lb/hr} = \frac{(VOC\ BAG_{ave} + VOC\ TRAP_{ave})\ SCFH}{32 \times 10^6}$$

$$VOC_t \text{ lb/hr} = \frac{(1629 \text{ bag} + 1187 \text{ trap})\ 1677 \text{ SCFH}}{32 \times 10^6}$$

VOC_t = 0.147

BONNER ANALYTICAL TESTING COMPANY
RT. 14, BOX 509
HATTIESBURG, MS 39402
(601) 264-2854

EPA METHOD 25

VOLATILE ORGANIC CARBON

Facility HERC Inc

Location 112

Date 5/24/88 Operators JP/MSB

Run # 2
Bag # 004
Trap # 004

Barometric Press (in Hg) 30.06

Ambient Temp. (F) 86

Wet Bulb 85
Dry Bulb 58
% Moisture <1

Sample Train Leak Rate (<1 cc/min) <1

Pretest Vacuum 30 in H_2O 0.30 in/min Leakrate (<1.6 in/min)

Post Test Vacuum 30 in H_2O 0.30 in/min Leakrate (<1.6 in/min)

DRY GAS METER

Meter # NA

Meter Coef: NA

Date Calibrated NA

	Time Clock/Sample	Mass Flow Meter Reading	Source Volumetric Flow Data: ft/min ~~Cubic feet~~	Dry Gas Meter Temp(F)	Static Press (in H_2O)
I	1050	130			
1	1100	130	163	84	
2	1110	130	163	86	
3	1120	130	168	86	
4	1130	130	168	86	
5	1140	130	164	86	
6	1150	130	164	88	
7					
8					
9					
10					
11					
12					
Total	60		165 Ft/min		
Average		130cc/min	2.75 Ft/sec	88 (548R)	30.06

BONNER ANALYTICAL TESTING COMPANY
RT. 14, BOX 509
HATTIESBURG, MS 39402
(601) 264-2854

BYRON METHOD 25 Lab Data Sheet

FACILITY Hercules

LOCATION 112 - Hydrogen Process RUN 2

Bag I.D. 004
Volume Collected 7.800 Volume Analyzed 7.800
if changed, why

Trap I.D. 004
Volume Collected 7.800 Burnout Volume 5.000

BAG ANALYSIS

Date 5/30/88 Analyst JP/MSB

				Average
NMHC	2613	2588	2580	2594
CO	5406	5375	5385	5389
CO_2	11442	11316	11213	11324
CH_4	22834	22390	22415	22546

TRAP ANALYSIS

Date 5/29/88 Temperature MSB Analyst JP

				Average
NMHC	<3	<3	<3	<3
CO	<3	<3	<3	<3
CO_2	5708	5755	5768	5744
CH_4	<3	<3	<3	<3

General Comments

VOC = volatile organic carbon - This is the sum of the VOC collected in the trap plus any VOC that passes through the trap into the bag. In the analysis the bag portion is the BAG NMHC (nonmethane hydrocarbon); the trap is burned out and all the VOC converted to carbon dioxide prior to analysis thus the trap portion is the TRAP CO_2.

$$VOC_t \text{ lb/hr} = \frac{(VOC\ BAG_{ave} + VOC\ TRAP_{ave})\ SCFH}{32 \times 10^6}$$

$$VOC_t \text{ lb/hr} = \frac{(2594 \text{ bag} + 5744 \text{ trap})\ 1859 \text{ SCFH}}{32 \times 10^6}$$

VOC_t = 0.484 lb/hr

BONNER ANALYTICAL TESTING COMPANY
RT. 14, BOX 509
HATTIESBURG, MS 39402
(601) 264-2854

p.47

EPA METHOD 25

VOLATILE ORGANIC CARBON

Facility Hercules Inc

Location 112

Date 5/24/88 Operators JP/MSB

Run # 3
Bag # 035
Trap # 035

Barometric Press (in Hg) 30.06

Ambient Temp. (F) 88

Wet Bulb 87
Dry Bulb 90
% Moisture <1

Sample Train Leak Rate (<1 cc/min) <1

Pretest Vacuum 30 in H_2O 0.30 in/min Leakrate (<1.6 in/min)

Post Test Vacuum 30 in H_2O 0.30 in/min Leakrate (<1.6 in/min)

DRY GAS METER

Meter # NA

Meter Coef: NA

Date Calibrated NA

	Time Clock/Sample	Mass Flow Meter Reading	Source Volumetric Flow Data: Cubic feet	Dry Gas Meter Temp(F)	Static Press (in H_2O)
I	1155	100 cc/min			
1	1205	100	176	90	
2	1215	100	176	90	
3	1225	100	176	90	
4	1235	100	180	90	
5	1245	100	180	90	
6	1255	100	180	90	
7					
8					
9					
10					
11					
12					
Total			178 Ft/mn		
Average		100cc/min	2.967 Ft/sec	90 (550R)	(30.06)

Pitot
Traverse

BONNER ANALYTICAL TESTING COMPANY
RT. 14, BOX 509
HATTIESBURG, MS 39402
(601) 264-2854

BYRON METHOD 25 Lab Data Sheet

FACILITY Hercules Inc

LOCATION 112 Hydrogen Proc. RUN 3

Bag I.D. 035
Volume Collected 6.000 Volume Analyzed 6.000
if changed, why

Trap I.D. 035
Volume Collected 6.000 Burnout Volume 6.250

BAG ANALYSIS Date 5/30/88 Analyst JP/mSB

				Average
NMHC	3755	3815	3795	3788
CO	5603	5705	5693	5667
CO_2	11656	11880	11453	11663
CH_4	22689	23110	23009	22926

TRAP ANALYSIS Date 5/29/88 Temperature 300 Analyst JP/mSB

				Average
NMHC	<3	<3	<3	<3
CO	<3	<3	<3	<3
CO_2	1799	1856	1834	1830
CH_4	<3	<3	<3	<3

General Comments

VOC = volatile organic carbon - This is the sum of the VOC collected in the trap plus any VOC that passes through the trap into the bag. In the analysis the bag portion is the BAG NMHC (nonmethane hydrocarbon); the trap is burned out and all the VOC converted to carbon dioxide prior to analysis thus the trap portion is the TRAP CO_2.

$$VOC_t \text{ lb/hr} = \frac{(VOC\ BAG_{ave} + VOC\ TRAP_{ave})\ SCFH}{32 \times 10^6}$$

$$VOC_t \text{ lb/Hr} = \frac{(3788 \text{ bag} + 1830 \text{ trap})\ 2006 \text{ SCFH}}{32 \times 10^6}$$

VOC_t = 0.352

Facility Hercules

Location 112 Hydrogen Process

p.44

Stack Gas Velocity (vs) avg. sec.

$(Vs)avg. = KpCp \quad (\Delta P)^{0.5} \quad ((Ts)avg.)^{0.5}$

RUN

1 2.467

2 2.75

3 2.967

Stack Gas Volumetric Flow Rate (std.cond.) Qs $\frac{ft.^3}{hr.}$

$3600\ (1-Bwo)\ VsA \quad \frac{(Tstd.)}{(Ts)avg.} \quad \frac{(Ps)}{Pstd.}$

RUN

1 $= (3600)(0.99)(2.467)(0.196)\left(\frac{528 * 30.06}{545 * 29.92}\right)$

$= 1677\ ft^3/Hr$

2 $(3600)(0.99)(2.75)(0.196)\left(\frac{528 * 30.06}{548 * 29.92}\right)$

$1859\ ft^3/HR$

3 $(3600)(0.99)(2.967)(0.196)\left(\frac{528 * 30.06}{548 * 29.92}\right)$

$2006\ ft^3/Hr$

MISSISSIPPI DEPARTMENT OF NATURAL RESOURCES
Bureau of Pollution Control
P.O. Box 10385
Jackson, Mississippi 39289-0385
(601) 961-5171

MEMORANDUM

TO: File

FROM: Jesse Thompson, Jr.

SUBJECT: Stack Test Review

DATE: June 8, 1989

Facility No. 110-0800-00001-161

The review of the data submitted for the Kettle Water Aspirator has been completed. The Aspirator was tested using EPA Method 25 for Volatile Organic Carbon. The review did not reveal any problems. I recommend that the test be accepted.

JT:cm

BONNER ANALYTICAL TESTING COMPANY
RT. 14, BOX 509
HATTIESBURG, MS 39402
(601) 264-2054

EPA METHOD 25

VOLATILE ORGANIC CARBON

Facility Hercules, Inc. - Hattiesburg, MS

Location 161 - Kettle Water Aspirator

Date 4/25/88 Operators JT/MSB

Run # 1
Bag # 009
Trap # 009

Barometric Press (in Hg) 29.99

Ambient Temp. (F) 84

Wet Bulb 77
Dry Bulb 85
% Moisture <1

Sample Train Leak Rate (<1 cc/min) <1

Pretest Vacuum 30 in H_2O 0.20 in/min Leakrate (<1.6 in/min)

Post Test Vacuum 30 in H_2O 0.25 in/min Leakrate (<1.6 in/min)

DRY GAS METER

Meter # 326323

Meter Coef: 0.99x

Date Calibrated 4/24/88

	Time	Mass Flow	Source Volumetric Flow Dscf	Dry Gas Meter	
	Clock/Sample	Meter Reading	Cubic Feet	Temp (F)	Static (in H_2O)
I	1514	123 cc/min	1.69	85	< 0.1
1	1524	123 cc/min	1.71	86	< 0.1
2	1534	133 cc/min	1.72	88	< 0.1
3	1544	133 cc/min	1.72	86	< 0.1
4	1554	133 cc/min	1.72	87	< 0.1
5	1604	133 cc/min	1.72	90	< 0.1
6	1614	133 cc/min	1.72	90	< 0.1
7					
8					
9					
10					
11					
12					
Total	60		0.03 Dscf		
Average		130 cc/min		87 (547R)	<0.1 (29.99)

BONNER ANALYTICAL TESTING COMPANY
RT. 14, BOX 509
HATTIESBURG, MS 39402
(601) 264-2054

BYRON METHOD 25 Lab Data Sheet

FACILITY Hercules, Inc.

LOCATION 161 Kett. Wat. Ass. RUN 8.1

Bag I.D. 009
Volume Collected 7.800 Volume Analyzed 7.800
if changed, why

Trap I.D. 009
Volume Collected 7.800 Burnout Volume 5.000

BAG ANALYSIS

Date 5/30/88 Analyst MSB/JP

				Average
NMHC	4125	4205	4280	4203
CO	< 3	< 3	< 3	< 3
CO_2	1778	1745	1810	1778
CH_4	< 3	< 3	< 3	< 3

TRAP ANALYSIS

Date 5/29/88 Temperature 300 C Analyst MSB/JP

				Average
NMHC	<3	<3	<3	<3
CO	<3	<3	<3	<3
CO_2	14392	14104	14680	14392
CH_4	<3	<3	<3	<3

General Comments

VOC = volatile organic carbon - This is the sum of the VOC collected in the trap plus any VOC that passes through the trap into the bag. In the analysis the bag portion is the BAG NMHC (nonmethane hydrocarbon); the trap is burned out and all the VOC converted to carbon dioxide prior to analysis thus the trap portion is the CO_2.

$$VOC_+ \text{ lb/hr} = \frac{(\text{VOC BAG}_{avg} + \text{VOC TRAP}_{avg})\ SCFH}{32 \times 10^6}$$

$$VOC_+ \text{ lb/hr} = \frac{(\ 4203\ \text{bag} + \ 14392\ \text{trap})\ 2.022\ SCFH}{32 \times 10^6}$$

$$VOC_+ = \ 1.68 \times 10^{-3}\ \text{lb/hr.}$$

BONNER ANALYTICAL TESTING COMPANY
RT. 14, BOX 507
HATTIESBURG, MS 39401
(601) 264-1054

Facility Hercules, Inc.

Location 161 - Kettle Water Aspirator

Run # 1

1. Standard Cubic Feet Per Run (Vms)

$$Vms = 17.647 \times Ym \ (Vmf - Vmi) \ \frac{(Pb + \frac{\Delta P}{13.6})}{Tm}$$

$$Vms = (17.647)(0.991)(0.03)\left(\frac{29.99}{547}\right)$$

$$= \boxed{0.029}$$

2. Standard Cubic Feet Per Hour (SCFH)

$$SCFH = \frac{Vms}{HR} = \boxed{0.029}$$

3. Gas Flow Rate

$$Qs = \frac{Vms}{\theta}$$

BONNER ANALYTICAL TESTING COMPANY
RT. 14, BOX 509
HATTIESBURG, MS 39402
(601) 264-2854

EPA METHOD 25

VOLATILE ORGANIC CARBON

Facility Hercules, Inc. - Hattiesburg, MS

Location 161 - Kettle Water Aspirator

Date 4/25/88 Operators JF/MSB

Run # 2
Bag # 008
Trap # 008

Barometric Press (in Hg) 29.99

Ambient Temp. (F) 84

Wet Bulb 77
Dry Bulb 85
% Moisture <1

Sample Train Leak Rate (<1 cc/min) <1

Pretest Vacuum 30 in H_2O 0.20 in/min Leakrate (<1.6 in/min)

Post Test Vacuum 30 in H_2O 0.20 in/min Leakrate (<1.6 in/min)

DRY GAS METER

Meter # 336323

Meter Coef: 0.991

Date Calibrated 4/24/88

Source Volumetric Flow Data

	Time Clock/Sample	Mass Flow Meter Reading	Cubic feet	Dry Gas Meter Temp (F)	Static Press (in H2O)
I	1620	180 cc/min	1.72	90	< 0.1
1	1630	176 cc/min	1.72	89	< 0.1
2	1640	158 cc/min	1.72	88	< 0.1
3	1650	153 cc/min	1.72	89	< 0.1
4	1700	153 cc/min	1.72	88	< 0.1
5	1710	153 cc/min	1.72	89	< 0.1
6	1720	153 cc/min	1.72	89	< 0.1
7					
8					
9					
10					
11					
12					
Total	60	1126	0.00 CF		< 0.1
Average		161 cc/min		BY (549R)	<0.1 (29.99)

BONNER ANALYTICAL TESTING COMPANY
RT. 14, BOX 509
HATTIESBURG, MS 39402
(601) 264-2854

BYRON METHOD 25 Lab Data Sheet

FACILITY Hercules, Inc.

LOCATION 161 Kettle Water Asp. RUN # 2

Bag I.D. 008
Volume Collected 9.660 Volume Analyzed 9.660
if changed, why

Trap I.D. 008
Volume Collected 9.660 Burnout Volume 9.660

BAG ANALYSIS

Date 5/30/88 Analyst MSB/JP

				Average
NMHC	173	179	179	177
CO	< 3	< 3	< 3	< 3
CO_2	905	853	888	882
CH_4	< 3	< 3	< 3	< 3

TRAP ANALYSIS

Date 5/30/88 Temperature 300 C Analyst MSB

				Average
NMHC	<3	<3	<3	<3
CO	<3	<3	<3	<3
CO_2	8248	8005	8175	8143
CH_4	<3	<3	<3	<3

General Comments

VOC = volatile organic carbon - This is the sum of the VOC collected in the trap plus any VOC that passed through the trap into the bag. In the analysis the bag portion is the BAG NMHC (nonmethane hydrocarbon); the trap is purged out and all the VOC converted to carbon dioxide prior to analysis thus the trap portion is the TRAP CO_2.

$$VOC_+ \text{ lb/hr} = \frac{(VOC\ BAG_{ave} + VOC\ TRAP_{ave})\ SCFM}{32 \times 10^6}$$

$$VOC_+ \text{ lb/hr} = \frac{(177 \text{ bag} + 8143 \text{ trap})\ 0.0[illegible]}{32 \times 10^6}$$

VOC_+ = 8320 ppm mass loading can not be calculated

RT. 14, BOX 509
HATTIESBURG, MS 39401
(601) 264-2054

Facility Hercules, Inc.

Location 161 - Kettle Water Application

Run # 2

1. Standard Cubic Feet Per Run (Vms)

$$Vms = 17.647 \times Ym \, (Vmf - Vmi) \frac{(Pb + \frac{\Delta P}{13.6})}{Tm}$$

$$Vms = (17.647)(0.991)$$

$$= \boxed{0 \text{ Discharge}}$$

2. Standard Cubic Feet Per Hour (SCFH)

$$SCFH = \frac{Vms}{HR} = \boxed{0 \text{ Discharge}}$$

3. Gas Flow Rate

$$Qs = \frac{Vms}{\theta}$$

BONNER ANALYTICAL TESTING COMPANY
RT. 14, BOX 509
HATTIESBURG, MS 39402
(601) 264-2854

EPA METHOD 25

VOLATILE ORGANIC CARBON

Facility Hercules, Inc. - Hattiesburg, MS

Location 161 - Kettle Water Asperator

Date 4/25/88 Operators [illegible]

Run # 3
Bag # 011
Trap # 011

Barometric Press (in Hg) 29.99

Ambient Temp. (F) 84

Wet Bulb 77
Dry Bulb 85
% Moisture <1

Sample Train Leak Rate (<1 cc/min) [illegible]

Pretest Vacuum 30 in H_2O 0.20 in/min Leakrate (<1.6 in/min)

Post Test Vacuum 30 in H_2O 0.20 in/min Leak rate (<1.6 in/min)

Dry GAS METER

Meter # [illegible]

Meter Coef. [illegible]

Date Calibrated [illegible]

	Time Clock/Sample	Mass Flow Meter Reading	Source Volumetric Flow Data: Cubic Feet	Dry Gas Meter Temp (F)	Static Press (in H2O)
I	1725	163 cc/min	[illegible]	[illegible]	[illegible]
1	1735	163 cc/min	[illegible]	[illegible]	[illegible]
2	1745	163 cc/min	[illegible]	[illegible]	[illegible]
3	1755	163 cc/min	[illegible]	[illegible]	[illegible]
4	1805	163 cc/min	[illegible]	[illegible]	[illegible]
5	1815	163 cc/min	[illegible]	[illegible]	[illegible]
6	1825	163 cc/min	[illegible]	[illegible]	[illegible]
7					
8					
9					
10					
11					
12					
Total	60		0.00 CF		
Average		163 cc/min		82 (542R)	<0.1 (24.99)

BONNER ANALYTICAL TESTING COMPANY
RT. 14, BOX 509
HATTIESBURG, MS 39402
(601) 264-2854

BYRON METHOD 25 Lab Data Sheet

FACILITY Hercules, Inc.

LOCATION 161 - Kettle Water Asp RUN # 3

Bag I.D. 011
Volume Collected 9.780 Volume Analyzed 9.780
if changed, why

Trap I.D. 011
Volume Collected 9.780 Burnout Volume

BAG ANALYSIS

Date 5/30/88 Analyst MSB/JP

				Average
NMHC	255	265	265	262
CO	< 3	< 3	< 3	< 3
CO_2	759	740	774	758
CH_4	< 3	< 3	< 3	< 3

TRAP ANALYSIS

Date 5/30/88 Temperature 300 C Analyst MSB

				Average
NMHC	<3	<3	<3	<3
CO	<3	<3	<3	<3
CO_2	2890	2775	2950	2872
CH_4	<3	<3	<3	<3

General Comments

VOC = volatile organic carbon - This is the sum of the VOC collected in the trap plus any VOC that passes through the trap into the bag. In the analysis the trap portion is the BAG NMHC (nonmethane hydrocarbon); the trap is [illegible] and all the VOC converted [illegible] sis thus the trap portion is the TRAP [illegible].

$$VOC_t \text{ lb/hr} = \frac{(VOC\ BAG_{avg} + VOC\ TRAP_{avg})\ SCFH}{32 \times 10^6}$$

$$VOC_t \text{ lb/hr} = \frac{(262 \text{ bag} + 2872 \text{ trap})\ [illegible]}{32 \times 10^6}$$

VOC_t = 3134 ppm mass loading can not be [illegible]

RT. 14, BOX 509
HATTIESBURG, MS 39401
(601) 264-2054

Facility Hercules, Inc.

Location 161 - Kettle Water Reservoir

Run # 3

1. Standard Cubic Feet Per Run (Vms)

$$Vms = 17.647 \times Ym \ (Vmf - Vmi) \ \frac{(Pb + \frac{\Delta Pm}{13.6})}{Tm}$$

Vms = Zero Discharge

= | 0 Discharge |

2. Standard Cubic Feet Per Hour (SCFH)

$$SCFH = \frac{Vms}{HR} = |0 \text{ Discharge}|$$

3. Gas Flow Rate

$$Qs = \frac{Vms}{\theta}$$

Method 18

Facility: Hercules, Inc.

Location: 161 - Kettle Water Aspirator

Analyte: Epichlorohydrin

1. Nanograms of standard injected @ STP (NGSTD)

$$NG(STD) = NGobs \times \frac{(29.92 \times Tobs)^{0.5}}{Pbar \times 528}$$

STD1 = 50 X 1.008 = 50.4

STD2 = 100 X 1.008 = 100.8

STD3 = 250 X 1.008 = 252

2. Concentration of Analyte mg/m³ @ STP CSTD

$$CSTD = \frac{AA \times 1 \times 10^{-3}}{RfSTD \times Vi \times \frac{(29.92 \times Tbar)^{0.5}}{Pbar \times 528}}$$

Run 1 = $\frac{< 100 \times 1 \times 10^{-3}}{970.2 \times 0.002 \times 1.008}$ = < 0.051

Run 2 = $\frac{936666 \times 1 \times 10^{-3}}{970.2 \times 0.002 \times 1.008}$ = 446.9

Run 3 = $\frac{101759 \times 1 \times 10^{-3}}{970.2 \times 0.002 \times 1.008}$ = 52.0

3. Parts per million of Analyte @ STP (PPM)

$$PPM = CSTD \times \frac{24.05}{MW}$$

Run 1 < 0.051 X $\frac{24.05}{78.45}$ = < 0.0157

Run 2 446.9 X $\frac{24.05}{78.45}$ = 137.0

Run 3 52.0 X $\frac{24.05}{78.45}$ = 15.9

4. Mass Loading of Analyte (STP) lb/hr (MSTD)

$$MSTD = \frac{CSTD \times SCFH}{1.6019 \times 10^{7}}$$

Run 1 = $\frac{< 0.051 \times 0.029}{1.6019 \times 10^{7}}$ = 9.32×10^{-11}

Run 2 = $\frac{X}{1.6019 \times 10^{7}}$ = NA

Run 3 = $\frac{X}{1.6019 \times 10^{7}}$ = NA

FIELD DATA SHEET VOLATILE HYDROCARBONS

Facility: Hercules, Inc.

Location: 161 - Kettle Water Aspirator

Date: 4/25/88 Operators JP/MSP

Analyte: Epicholrohydrin

	Run 1	Run 2	Run 3
Sample Temp (F	85	85	85
Barometric press (in Hg)	29.99	29.99	29.99
Ambient Temperature (F)	84	84	84
Sample flow rate	100	100	100
Bag ID	161/1	161/2	161/3
Start Time	1514	1620	1725
End Time	1614	1720	1825

Facility: Hercules, Inc. Method 1E-GC/MS

Location: 161 - Kettle Water Asp. Sample Type Bag

Date: 6/3/88

Analyte: Epichlorohydrin Operator: DM/MSB

Calibration Data: GC - GC/MS

	STANDARD	Amt (ng) STD	AREA			Ave Area	Ave Area/ng
1.	50	50.4	36558	47774	45663	41332	820
2.	100	100.8	92046	74366	96076	89162	884
3.	250	252	303753	317112	291438	304098	1206

Rf (STD) = 970.2

Sample	Area	Samp Vol. (L)	mg/m³ (STD)	PPM (STD)	lb/hr (STD)
Run 1A	< 100				
1B	< 100				
1C	< 100				
Ave (AA)	< 100	0.002	< 0.051	< 0.0157	NA
2A	956701				
2B	933811				
2C	919456				
Ave (AA)	936666	0.002	446.9	137	NA
3A	100277				
3B	103645				
3C	101355				
Ave (AA)	101759	0.002	50.2	15.9	NA

BONNER ANALYTICAL TESTING COMPANY
RT. 14, BOX 509
HATTIESBURG, MS 39402
(601) 264-2854

EPA METHOD 25

VOLATILE ORGANIC CARBON

Facility Hercules Inc - H'burg

Location 161 - Kettle Water Aspiration

Date 4/25/88 Operators JP/MSB

Run # 1
Bag # 009
Trap # 009

Barometric Press (in Hg) 29.99

Ambient Temp. (F) 84

Wet Bulb 77
Dry Bulb 85
% Moisture <1

Sample Train Leak Rate ((1 cc/min) <1

Pretest Vacuum 30 in H_2O 0.20 in/m Leakrate ((1.6 in/min)

Post Test Vacuum 30 in H_2O 0.25 in/m Leakrate ((1.6 in/min)

+ EPI

DRY GAS METER

Meter # 336323

Meter Coef: 0.991

Date Calibrated 4/24/88

	Time	Mass Flow	Source Volumetric Flow Data		
	Clock/Sample	Meter Reading	Cubic feet	Dry Gas Meter Temp(F)	Static Press (in H_2O)
I	1514	123 cc/min	1.69	85	<0.1
1	1524	123	1.71	86	<0.1
2	1534	133	1.72	88	<0.1
3	1544	133	1.72	86	<0.1
4	1554	133	1.72	89	<0.1
5	1604	133	1.72	90	<0.1
6	1614	133	1.72	90	<0.1
7					
8					
9					
10					
11					
12					
Total	60		0.03 CF		
Average		130 cc/min		87 (547R)	<0.1 (29.99)

BONNER ANALYTICAL TESTING COMPANY
RT. 14, BOX 509
HATTIESBURG, MS 39402
(601) 264-2854

BYRON METHOD 25 Lab Data Sheet

FACILITY Hercules

LOCATION 161 RUN 1

Bag I.D. 009
Volume Collected 7.800 Volume Analyzed 7.800
if changed, why

Trap I.D. 009
Volume Collected 7.800 Burnout Volume 5.000

BAG ANALYSIS Date 5/30/88 Analyst MRB/JP

				Average
NMHC	4125	4205	4280	4203
CO	<3	<3	<3	<3
CO_2	1778	1745	1810	1778
CH_4	<3	<3	<3	<3

TRAP ANALYSIS

Date 5/29/88 Temperature 300°C Analyst MRB/JP

				Average
NMHC	<3	<3	<3	<3
CO	<3	<3	<3	<3
CO_2	14392	14104	14680	14392
CH_4	<3	<3	<3	<3

General Comments

VOC = volatile organic carbon - This is the sum of the VOC collected in the trap plus any VOC that passes through the trap into the bag. In the analysis the bag portion is the BAG NMHC (nonmethane hydrocarbon); the trap is burned out and all the VOC converted to carbon dioxide prior to analysis thus the trap portion is the TRAP CO_2.

$$VOC_t \text{ lb/hr} = \frac{(VOC\ BAG_{ave} + VOC\ TRAP_{ave})\ SCFH}{32 \times 10^6}$$

$$VOC_t \text{ lb/hr} = \frac{(4203 \text{ bag} + 14392 \text{ trap})\ 0.029 \text{ SCFH}}{32 \times 10^6}$$

$$VOC_t = 1.68 \times 10^{-5} \text{ lb/hr}$$

BONNER ANALYTICAL TESTING COMPANY
RT. 14, BOX 509
HATTIESBURG, MS 39401
(601) 264-2854

Facility Hercules Inc

Location 161

Run 1

1. Standard Cubic Feet Per Run (Vms)

$$Vms = 17.647 \times Ym \ (Vmf - Vmi) \ \frac{(Pb + \frac{DPm}{13.6})}{Tm}$$

$$Vms = 17.647 * 0.991 * 0.03 * \frac{29.99}{547}$$

$$= \boxed{0.029}$$

2. Standard Cubic Feet Per Hour (SCFH)

$$SCFH = \frac{Vms}{HR} = \boxed{0.029}$$

3. Gas Flow Rate

$$Qs = \frac{Vms}{J}$$

BONNER ANALYTICAL TESTING COMPANY
RT. 14, BOX 509
HATTIESBURG, MS 39402
(601) 264-2854

EPA METHOD 25

VOLATILE ORGANIC CARBON

Facility Hercules Inc Hattiesburg

Location 161 - Kettle Water Aspirator

Date 4/25/88 Operators JP/MSB

Run # 2
Bag # 008
Trap # 008

Barometric Press (in Hg) 29.99

Ambient Temp. (F) 84

Wet Bulb 77
Dry Bulb 85
% Moisture <1

Sample Train Leak Rate ((1 cc/min) <1

Pretest Vacuum 30 in H_2O 0.20 in/m Leakrate ((1.6 in/min)

Post Test Vacuum 30 in H_2O 0.20 in/m Leakrate ((1.6 in/min)

DRY GAS METER

Meter # 386323

Meter Coef: 0.991

Date Calibrated 4/24/88

	Time Clock/Sample	Mass Flow Meter Reading	Source Volumetric Flow Data: Cubic feet	Dry Gas Meter Temp(F)	Static Press (in H_2O)
I	1620	~~1.72~~ 180	1.72	90	<0.1
1	1630	~~1.72~~ 176	1.72	~~88~~ 88	<0.1
2	1640	~~1.72~~ 158	1.72	88	<0.1
3	1650	~~1.72~~ 153	1.72	89	<0.1
4	1700	~~1.72~~ 153	1.72	88	<0.1
5	1710	~~1.72~~ 153	1.72	89	<0.1
6	1720	~~1.72~~ 153	1.72	89	<0.1
7					
8					
9					
10					
11					
12					
Total	60	1126	0.00		<0.1
Average		~~1.72~~ 161 cc/min ~~0.00~~ NO FLOW	NO FLOW	89 (549R)	<0.1 (29.99)

BONNER ANALYTICAL TESTING COMPANY
RT. 14, BOX 509
HATTIESBURG, MS 39402
(601) 264-2854

BYRON METHOD 25 Lab Data Sheet

FACILITY Hercules

LOCATION 161 RUN 2

Bag I.D. 008
Volume Collected 9.660 Volume Analyzed 9.660
if changed, why

Trap I.D. 008
Volume Collected 9.660 Burnout Volume 9.660

BAG ANALYSIS Date 5/30/88 Analyst MSB/JP

				Average
NMHC	173	179	179	177
CO	<3	<3	<3	<3
CO_2	905	853	888	882
CH_4	<3	<3	<3	<3

TRAP ANALYSIS Date 5/30/88 Temperature 300° Analyst MSB

				Average
NMHC	<3	<3	<3	<3
CO	<3	<3	<3	<3
CO_2	8248	8005	8175	8143
CH_4	<3	<3	<3	<3

General Comments

VOC = volatile organic carbon - This is the sum of the VOC collected in the trap plus any VOC that passes through the trap into the bag. In the analysis the bag portion is the BAG NMHC (nonmethane hydrocarbon); the trap is burned out and all the VOC converted to carbon dioxide prior to analysis thus the trap portion is the TRAP CO_2.

$$VOC_t \text{ lb/hr} = \frac{(VOC\ BAG_{ave} + VOC\ TRAP_{ave})\ SCFH}{32 \times 10^6}$$

$$VOC_t \text{ lb/hr} = \frac{(177 \text{ bag} + 8143 \text{ trap})\ \text{Zero Discharge SCFH}}{32 \times 10^6}$$

VOC_t = 8320 PPM. MASS loading CAN not be CALCulated

BONNER ANALYTICAL TESTING COMPANY
RT. 14, BOX 509
HATTIESBURG, MS 39401
(601) 264-2854

Facility HERC

Location 161

Run 2

1. Standard Cubic Feet Per Run (Vms)

$$Vms = 17.647 \times Ym \ (Vmf - Vmi) \ \frac{(Pb + \frac{DPm}{13.6})}{Tm}$$

$Vms = 17.647 * 0.991$

= Zero Discharge

2. Standard Cubic Feet Per Hour (SCFH)

$SCFH = \frac{Vms}{HR}$ Zero Discharge

3. Gas Flow Rate

$Qs = \frac{Vms}{J}$

BONNER ANALYTICAL TESTING COMPANY
RT. 14, BOX 509
HATTIESBURG, MS 39402
(601) 264-2854

EPA METHOD 25

VOLATILE ORGANIC CARBON

Facility H&R Coke Inc

Location 161 - Kettle Water Aspirator.

Date 4/25/88 Operators JP/MSB

Run # 3
Bag # 011
Trap # 011

Barometric Press (in Hg) 29.99

Ambient Temp. (F) 84

Wet Bulb 77
Dry Bulb 85
% Moisture <1

Sample Train Leak Rate ((1 cc/min) <1

Pretest Vacuum 30 in H_2O 0.20 in/min Leakrate ((1.6 in/min)

Post Test Vacuum 30 in H_2O 0.20 in/min Leakrate ((1.6 in/min)

DRY GAS METER

Meter # 336323

Meter Coef: 0.991

Date Calibrated 4/24/88

	Time Clock/Sample	Mass Flow Meter Reading	Source Volumetric Flow Data: Cubic feet	Dry Gas Meter Temp(F)	Static Press (in H_2O)
I	1725	163	81.73	85	<0.1
1	1735	163	1.73	84	<0.1
2	1745	163	1.73	84	<0.1
3	1755	163	1.73	80	<0.1
4	1805	163	1.73	80	<0.1
5	1815	163	1.73	80	<0.1
6	1825	163	1.73	80	<0.1
7					
8					
9					
10					
11					
12					
Total	60.		0.0 CF		
Average		163 cc/min (9.780)		82 (542R)	0.1 29.99

BONNER ANALYTICAL TESTING COMPANY
RT. 14, BOX 509
HATTIESBURG, MS 39402
(601) 264-2854

BYRON METHOD 25 Lab Data Sheet

FACILITY Hercules

LOCATION 161 - Kettle Water Ap RUN 3

Bag I.D. 011
Volume Collected 9780 Volume Analyzed 9.780
if changed, why

Trap I.D. 011
Volume Collected 9.780 Burnout Volume

BAG ANALYSIS Date 5/30/88 Analyst JP/MSB

				Average
NMHC	255	265	265	262
CO	<3	<3	<3	<3
CO_2	759	740	774	758
CH_4	<3	<3	<3	<3

TRAP ANALYSIS

Date 5/30/88 Temperature 300 Analyst JP/MSB

				Average
NMHC	<3	<3	<3	<3
CO	<3	<3	<3	<3
CO_2	2890	2775	2950	2872
CH_4	<3	<3	<3	<3

General Comments

VOC = volatile organic carbon - This is the sum of the VOC collected in the trap plus any VOC that passes through the trap into the bag. In the analysis the bag portion is the BAG NMHC (nonmethane hydrocarbon); the trap is burned out and all the VOC converted to carbon dioxide prior to analysis thus the trap portion is the TRAP CO_2.

$$VOC_t \text{ lb/hr} = \frac{(VOC\ BAG_{ave} + VOC\ TRAP_{ave})\ SCFH}{32 \times 10^6}$$

$$VOC_t \text{ lb/hr} = \frac{(262 \text{ bag} + 2872 \text{ trap}) \text{ Zero Discharge SCFH}}{32 \times 10^6}$$

VOC_t = 3134 PPM - No MASS Loading could be calculated

BONNER ANALYTICAL TESTING COMPANY
RT. 14, BOX 509
HATTIESBURG, MS 39401
(601) 264-2854

Facility Hercules

Location 161

Run 3

1. Standard Cubic Feet Per Run (Vms)

$$Vms = 17.647 \times Ym \ (Vmf - Vmi) \ \frac{(Pb + \frac{DPm}{13.6})}{Tm}$$

Vms = Zero Discharge

=

2. Standard Cubic Feet Per Hour (SCFH)

$$SCFH = \frac{Vms}{HR}$$

3. Gas Flow Rate

$$Qs = \frac{Vms}{J}$$

Method 18

Facility: Hercules Inc

Location: 161

Analyte: Epichlorohydrin

1. Nanograms of standard injected @ STP (NG_{STD})

$$NG_{(STD)} = NGobs \times \frac{(29.92 \times Tobs)^{0.5}}{Pbar \times 528}$$

STD1 = 50 x 1.008 = 50.4

STD2 = 100 x 1.008 = 1008

STD3 = 250 x 1.008 = 252

2. Concentration of Analyte mg/m³ @ STP C_{STD}

$$C_{STD} = \frac{AA \times 1 \times 10^{-3}}{Rf_{STD} \times Vi \times \frac{(29.92 \times Tobs)^{0.5}}{Pbar \times 528}}$$

Run 1 = $\frac{<100 \times 1 \times 10^{-3}}{970.2 \times .002 \times 1.008}$ = <0.051

Run 2 = $\frac{93666 \times 1 \times 10^{-3}}{970.2 \times 0.002 \times 1.008}$ = 446.9

Run 3 = $\frac{101759 \times 1 \times 10^{-3}}{970.2 \times 0.002 \times 1.008}$ = 52.0

3. Parts per million of Analyte @ STP (PPM)

$$PPM = C_{STD} \times \frac{24.05}{MW}$$

Run 1 <0.051 x $\frac{24.05}{78.45}$ = <0.0157

Run 2 446.9 x $\frac{24.05}{78.45}$ = 137.0

Run 3 52.0 x $\frac{24.05}{78.45}$ = 15.9

4. Mass Loading of Analyte (STP) lb/hr (M_{STD})

$$M_{STD} = \frac{C_{STD} \times SCFH}{1.6019 \times 107}$$

Run 1 = $\frac{<0.051 \times 0.029}{1.6019 \times 107}$ = ~~NA~~ $9.32 * 10^{-11}$

Run 2 = $\frac{X}{1.6019 \times 107}$ = NA

Run 3 = $\frac{X}{1.6019 \times 107}$ = NA

FIELD DATA SHEET VOLATILE HYDROCARBONS

Facility: Hercules Inc

Location: 161-Kettle Water Aspiration

Date: 4/25/88 Operators JP/MSB

Analyte: EPIChlorohydrin

	Run 1	Run 2	Run 3
Sample Temp (F	85	85	85
Barometric press (in Hg)	29.99	29.99	29.99
Ambient Temperature (F)	84	84	84
Sample flow rate cc/min	100	100	100
Bag ID	161/1	161/2	161/3
Start Time	1514	1620	1725
End Time	1614	1720	1825

Facility: Hercules Inc Method 1B - GC/MS

Location: 161- Sample Type Bag

Date: 6/3/88

Analyte: Epichlorohydrin Operator: DM/MSB

Calibration Data: GC - GC/MS

	STANDARD	Amt (ng) STD	AREA			Ave Area	Ave Area/ng
1.	50	50.4	36558	41774	45663	41332	820
2.	100	100.8	92046	79366	96076	89162	884
3.	250	252.	303753	317112	291431	304098	1206

Rf (STD) = 970.2

Sample	Area	Samp Vol. (L)	mg/m³ (STD)	PPM (STD)	lb/hr (STD)
Run 1A	<100				
1B	<100				
1C	<100				
Ave (AA)	<100	0.002	<0.051	<0.0157	NA
2A	956701				
2B	933811				
2C	919456				
Ave (AA)	936656	0.002	446.9	137	NA
3A	100277				
3B	103645				
3C	101355				
Ave (AA)	101759	0.002	52.0	15.9	NA

MISSISSIPPI DEPARTMENT OF NATURAL RESOURCES
Bureau of Pollution Control
P.O. Box 10385
Jackson, Mississippi 39289-0385
(601) 961-5171

MEMORANDUM

TO: File

FROM: Jesse Thompson, Jr.

SUBJECT: Stack Test Review

DATE: June 8, 1989



Facility No. 110-0800-00001-182

The review of the test data submitted for the Ammonia Scrubber has been finished. The emission point was tested utilizing NIOSH Method Method 205. The review did not reveal any problems. I recommend that the test be accepted.

JT:cm

BONNER ANALYTICAL TESTING COMPANY
RT. 14, BOX 509
HATTIESBURG, MS 39402
(601) 264-2854

AMMONIA VIA

NIOSH METHOD 205

Facility Hercules Inc. - Hattiesburg, MS

Location 182 - Ammonia Scrubber

Date 5/26/88 Operators JJ/MSB

Run # 1
Bag # NA
Trap # NA

Barometric Press (in Hg) 30.06

Ambient Temp. (F) 92

Wet Bulb 67
Dry Bulb 81
% Moisture <1

Sample Train Leak Rate (<1 cc/min) <1.0 cc/min

Pretest Vacuum 30 in H_2O <0.3 in/min Leakrate (<1.6 in/min)

Post Test Vacuum 30 in H_2O <0.3 in/min Leakrate (<1.6 in/min)

DRY GAS METER

Meter # 326323

Meter Coef: 0.991

Date Calibrated 5/19/88

	Time	Mass Flow	Source Volumetric Flow Data		
	Clock/Sample	Meter Reading	Dry Gas Meter: Cubic feet	Temp (F)	Static Press (in H_2O)
I	1135	150 cc/min			
1	1145	150 cc/min			
2	1155	150 cc/min			
3	1205	150 cc/min			
4	1215	150 cc/min			
5	1225	150 cc/min			
6	1235	150 cc/min			
7					
8					
9					
10					
11					

$V_{STD} = fr \times 0 \times \left(\frac{P_{bar} \times T_{STD}}{P_{STD} \quad T_m}\right)$

$V_{STD} = 0.15 \times 60 \left(\frac{30.06 \times 529}{29.92 \quad 541}\right)^{0.5}$

$V_{STD} = 8.92$ liters

Total 60 .150 l/min

Average 9 liters

BONNER ANALYTICAL TESTING COMPANY
RT. 14, BOX 509
HATTIESBURG, MS 39402
(601) 264-2854

EPA METHOD 25

VOLATILE ORGANIC CARBON

Facility Hercules, Inc. - Hattiesburg, MS

Location 182 - Ammonia Scrubber

Date 5/26/88 Operators JP/MSB

Run # 1
Bag # 020
Trap # 020

Barometric Press (in Hg) 30.06

Ambient Temp. (F) 82

Wet Bulb 67
Dry Bulb 81
% Moisture <1

Sample Train Leak Rate (<1 cc/min) <1.0 cc/min

Pretest Vacuum 30 in H_2O <0.25 in/min Leakrate (<1.6 in/min)

Post Test Vacuum 30 in H_2O <0.25 in/min Leakrate (<1.6 in/min)

DRY GAS METER

Meter # 336323

Meter Coef. 0.991

Date Calibrated 5/19/88

	Time	Mass Flow	Source Volumetric Flow Data: Dry Gas Meter		Static
	Clock/Sample	Meter Reading	Cubic feet	Temp (F)	Press (in H_2O)
I	1135	100 cc/min	493.645	82	< 0.1
1	1145	100 cc/min	493.645	82	< 0.1
2	1155	100 cc/min	493.645	82	< 0.1
3	1205	100 cc/min	493.645	82	< 0.1
4	1215	100 cc/min	493.645	82	< 0.1
5	1225	100 cc/min	493.645	82	< 0.1
6	1235	100 cc/min	493.645	82	< 0.1
7					
8					
9					
10					
11					
12					
Total	60				
Average		100 cc/min		81 (542R)	<0.1 (30.06)

BYRON ANALYTICAL TESTING EQUIPMENT
RT. 14, BOX 509
HATTIESBURG, MS 39402
(601) 264-2854

BYRON METHOD 25 Lab Data Sheet

FACILITY Hercules, Inc.

LOCATION 182 - Ammonia Scrubber RUN # 1

Bag I.D. 020
Volume Collected 6.000 Volume Analyzed 6.000
if changed, why

Trap I.D. 020
Volume Collected 6.000 Burnout Volume 5.000

BAG ANALYSIS

Date 5/28/88 Analyst MSB

				Average
NMHC	363000	355000	364000	360666
CO	42507	41967	42236	42237
CO_2	15	15	13	14
CH_4	110230	108222	109276	109242

TRAP ANALYSIS

Date 5/28/88 Temperature 300 C Analyst MSB/[illegible]

				Average
NMHC	<3	<3	<3	<3
CO	85	86	87	86
CO_2	5750	5690	5711	5716
CH_4	<3	<3	<3	<3

General Comments

VOC = volatile organic carbon - This is the sum of the VOC collected in the trap plus any VOC that passes through the trap into the bag. In the analysis the bag portion is the BAG NMHC (nonmethane hydrocarbon); the trap is burned out and all the VOC converted to carbon dioxide prior to analysis thus the trap portion is the TRAP CO_2.

$$VOC_+ \text{ lb/hr} = \frac{(\text{VOC BAG}_{avg} + \text{VOC TRAP}_{avg}) \text{ SCFM}}{32 \times 10^6}$$

$$VOC_+ \text{ lb/hr} = \frac{(360666 \text{ bag} + 5716 \text{ trap}) \text{ 0 Discharge SCFM}}{32 \times 10^6}$$

VOC_+ = 366382 PPM

BONNER ANALYTICAL TESTING COMPANY
RT. 14, BOX 509
HATTIESBURG, MS 39401
(601) 264-2854

Facility Hercules, Inc.

Location 182 - Ammonia Scrubber

Run # 1

1. Standard Cubic Feet Per Run (Vms)

$$Vms = 17.647 \times Ym \ (Vmf - Vmi) \ \frac{(Pb + \frac{\Delta Pm}{13.6})}{Tm}$$

Vms = Zero Discharge

2. Standard Cubic Feet Per Hour (SCFH)

$$SCFH = \frac{Vms}{HR} = \boxed{<0.001}$$

3. Gas Flow Rate

$$Qs = \frac{Vms}{\theta}$$

BONNER ANALYTICAL TESTING COMPANY
RT. 14, BOX 509
HATTIESBURG, MS 39402
(601) 264-2854

AMMONIA VIA

NIOSH METHOD 205

Facility Hercules, Inc. - Hattiesburg, MS

Location 182 - Ammonia Scrubber

Date 5/26/88 Operators JM/MSB

Run # 2
Bag # NA
Trap # NA

Barometric Press (in Hg) 30.06

Ambient Temp. (F) 82

Wet Bulb 67
Dry Bulb 81
% Moisture <1

Sample Train Leak Rate (<1 cc/min) <1.0 cc/min

Pretest Vacuum 30 in H_2O 0.35 in/min Leakrate (<1.6 in/min)

Post Test Vacuum 30 in H_2O 0.35 in/min Leakrate (<1.6 in/min)

DRY GAS METER

Meter # 336323

Meter Coef: 0.991

Date Calibrated 5/19/88

	Time	Mass Flow	Source Volumetric Flow Data		
			Dry Gas Meter		Static
	Clock/Sample	Meter Reading	Cubic feet	Temp (F)	Press (in H_2O)
I	1240	150 cc/min			
1	1250	150 cc/min			
3	1300	150 cc/min			
4	1310	150 cc/min			
5	1320	150 cc/min			
6	1340	150 cc/min			
7					
8					
9					
10					
11					
12					

$$V_{STD} = fr \times O \times \left(\frac{P_{bar}}{P_{STD}} \times \frac{T_{STD}}{T_M}\right)$$

$$V_{STD} = 0.15 \times 60 \left(\frac{30.06}{29.92} \times \frac{528}{541}\right)^{-.5}$$

V_{STD} = 8.912 liters

Total 60 .150 l/min

Average 9 liters

BONNER ANALYTICAL TESTING COMPANY
RT. 14, BOX 509
HATTIESBURG, MS 39402
(601) 264-2854

EPA METHOD 25

VOLATILE ORGANIC CARBON

Facility Hercules, Inc. - Hattiesburg, MS

Location 182 - Ammonia Scrubber

Date 5/26/88 Operators JP/MSD

Run # 2
Bag # 030
Trap # 030

Barometric Press (in Hg) 30.06

Ambient Temp. (F) 82

Wet Bulb 67
Dry Bulb 81
% Moisture <1

Sample Train Leak Rate (<1 cc/min) <1.0 cc/min

Pretest Vacuum 30 in H_2O 0.30 in/min Leakrate (<1.6 in/min)

Post Test Vacuum 30 in H_2O 0.35 in/min Leakrate (<1.6 in/min)

DRY GAS METER

Meter # 336323

Meter Coef: 0.991

Date Calibrated 5/19/88

	Time	Mass Flow	Source Volumetric Flow Data		
	Clock/Sample	Meter Reading	Cubic feet	Dry Gas Meter Temp (F)	Static Press (in H_2O)
I	1240	140 cc/min	493.645	82	< 0.1
1	1250	140 cc/min	493.645	82	< 0.1
2	1300	140 cc/min	493.645	82	< 0.1
3	1310	140 cc/min	493.645	82	< 0.1
4	1320	140 cc/min	493.645	82	< 0.1
5	1330	140 cc/min	493.645	82	< 0.1
6	1340	140 cc/min	493.645	82	< 0.1
7					
8					
9					
10					
11					
12					
Total	60		0		
Average		140 cc/min		82 (542R)	<0.1 (30.06)

BONNER ANALYTICAL TESTING COMPANY
RT. 14, BOX 509
HATTIESBURG, MS 39402
(601) 264-2854

BYRON METHOD 25 Lab Data Sheet

FACILITY Hercules, Inc.

LOCATION 182 - Ammonia Scrubber RUN # 2

Bag I.D. 030
Volume Collected 8.400 Volume Analyzed 8.400
if changed, why

Trap I.D. 030
Volume Collected 8.400 Surnout Volume 9.280

BAG ANALYSIS

Date 5/28/88 Analyst MSB/JP

				Average
NMHC	400266	408270	392260	400265
CO	46343	45410	47170	46307
CO_2	<3	<3	<3	<3
CH_4	116920	114580	119250	116916

TRAP ANALYSIS

Date 5/30/88 Temperature 300 C Analyst MSB/JP

				Average
NMHC	<3	<3	<3	<3
CO	<3	<3	<3	<3
CO_2	17045	16877	16804	16908
CH_4	<3	<3	<3	<3

General Comments

VOC = volatile organic carbon - This is the sum of the VOC collected in the trap plus any VOC that passes through the trap into the bag. In the analysis the bag portion is the BAG NMHC (nonmethane hydrocarbon); the trap is burned out and all the VOC converted to carbon dioxide prior to analysis thus the trap portion is the TRAP CO_2.

$$VOC_+ \text{ lb/hr} = \frac{(\text{VOC BAG}_{ave} + \text{VOC TRAP}_{ave})\ \text{SCFM}}{32 \times 10^6}$$

$$VOC_+ \text{ lb/hr} = \frac{(400265 \text{ bag} + 16908 \text{ trap})\ 0 \text{ Discharge SCFM}}{32 \times 10^6}$$

VOC_+ = 417173 PPM

BUNNER ANALYTICAL TESTING COMPANY
RT. 14, BOX 509
HATTIESBURG, MS 39401
(601) 264-2854

Facility Hercules, Inc.

Location 182 - Ammonia Scrubber

Run # 2

1. Standard Cubic Feet Per Run (Vms)

$$Vms = 17.647 \times Ym \ (Vmf - Vmi) \ \frac{(Pb + \frac{\Delta Pm}{13.6})}{Tm}$$

Vms = Zero Discharge

2. Standard Cubic Feet Per Hour (SCFH)

$$SCFH = \frac{Vms}{HR} = \boxed{<0.001}$$

3. Gas Flow Rate

$$Qs = \frac{Vms}{@}$$

BONNER ANALYTICAL TESTING COMPANY
RT. 14, BOX 509
HATTIESBURG, MS 39402
(601) 264-2854

AMMONIA VIA

NIOSH METHOD 205

Facility Hercules, Inc. - Hattiesburg, MS

Location 182 - Ammonia Scrubber

Date 5/26/88 Operators JF/MSW

Run # 3
Bag # NA
Trap # NA

Barometric Press (in Hg) 30.06

Ambient Temp. (F) 83

Wet Bulb 69
Dry Bulb 83
% Moisture <1

Sample Train Leak Rate (<1 cc/min) <1.0 cc/min

Pretest Vacuum 30 in H_2O 0.35 in/min Leakrate (<1.6 in/min)

Post Test Vacuum 30 in H_2O 0.35 in/min Leakrate (<1.6 in/min)

DRY GAS METER

Meter # 336323

Meter Coef: 0.991

Date Calibrated 5/19/88

	Time	Mass Flow	Source Volumetric Flow Data: Dry Gas Meter		Static
	Clock/Sample	Meter Reading	Cubic feet	Temp (F)	Press (in H_2O)
I	1345	150 cc/min			
1	1355	150 cc/min			
2	1405	150 cc/min			
3	1415	150 cc/min			
4	1425	150 cc/min			
5	1435	150 cc/min			
6	1445	150 cc/min			
7					
8					
9					
10					
11					
Total	60	0.150 l/min			
Average		9 liters			

$$V_{STD} = fr \times O \times \left(\frac{P_{bar}}{P_{STD}} \times \frac{T_{STD}}{T_m}\right)$$

$$V_{STD} = 0.15 \times 60 \left(\frac{30.06}{29.92} \times \frac{528}{541}\right)^{0.5}$$

V_{STD} = 8.912 liters

BONNER ANALYTICAL TESTING COMPANY
RT. 14, BOX 509
HATTIESBURG, MS 39402
(601) 264-2854

EPA METHOD 25

VOLATILE ORGANIC CARBON

Facility Hercules, Inc. - Hattiesburg, MS

Location 182 - Ammonia Scrubber

Date 5/26/88 Operators JP/MSB

Run # 3
Bag # 017
Trap # 017

Barometric Press (in Hg) 30.06

Ambient Temp. (F) 83

Wet Bulb 69
Dry Bulb 83
% Moisture <1

Sample Train Leak Rate (<1 cc/min) <1.0 cc/min

Pretest Vacuum 30 in H_2O 0.30 in/min Leakrate (<1.6 in/min)

Post Test Vacuum 30 in H_2O 0.30 in/min Leakrate (<1.6 in/min)

DRY GAS METER

Meter # 336323

Meter Coef: 0.991

Date Calibrated 5/19/88

	Time	Mass Flow	Source Volumetric Flow Data		
				Dry Gas Meter	Static
	Clock/Sample	Meter Reading	Cubic feet	Temp (F)	Press (in H_2O)
I	1345	150 cc/min	493.645	83	< 0.1
1	1355	150 cc/min	493.645	83	< 0.1
2	1405	150 cc/min	493.645	83	< 0.1
3	1415	150 cc/min	493.645	83	< 0.1
4	1425	150 cc/min	493.645	83	< 0.1
5	1435	150 cc/min	493.645	83	< 0.1
6	1445	150 cc/min	493.645	83	< 0.1
7					
8					
9					
10					
11					
12					
Total	60		0		
Average		150 cc/min		83 (543R)	<0.1 (30.06)

BONNER ANALYTICAL TESTING COMPANY
RT. 14, BOX 509
HATTIESBURG, MS 39402
(601) 264-2854

EPA METHOD 25

VOLATILE ORGANIC CARBON

Facility Hercules, Inc. - Hattiesburg, MS

Location 182 - Ammonia Scrubber

Date 5/26/88 Operators JP/MSB

Run # 3
Bag # 017
Trap # 017

Barometric Press (in Hg) 30.06

Ambient Temp. (F) 83

Wet Bulb 69
Dry Bulb 83
% Moisture <1

Sample Train Leak Rate (<1 cc/min) <1.0 cc/min

Pretest Vacuum 30 in H_2O 0.30 in/min Leakrate (<1.6 in/min)

Post Test Vacuum 30 in H_2O 0.30 in/min Leakrate (<1.6 in/min)

DRY GAS METER

Meter # 336323

Meter Coef: 0.991

Date Calibrated 5/19/88

	Time	Mass Flow	Source Volumetric Flow Data		
	Clock/Sample	Meter Reading	Cubic Feet	Dry Gas Meter Temp (F)	Static Press (in H_2O)
I	1345	150 cc/min	493.645	83	< 0.1
1	1355	150 cc/min	493.645	83	< 0.1
2	1405	150 cc/min	493.645	83	< 0.1
3	1415	150 cc/min	493.645	83	< 0.1
4	1425	150 cc/min	493.645	83	< 0.1
5	1435	150 cc/min	493.645	83	< 0.1
6	1445	150 cc/min	493.645	83	< 0.1
7					
8					
9					
10					
11					
12					
Total	60		0		
Average		150 cc/min		83 (543R)	<0.1 (30.06)

BONNER ANALYTICAL TESTING COMPANY
RT. 14, BOX 509
HATTIESBURG, MS 39402
(601) 264-2854

BYRON METHOD 25 Lab Data Sheet

FACILITY Hercules, Inc.

LOCATION 182 - Ammonia Scrubber RUN # 3

Bag I.D. 017
Volume Collected 9.000 Volume Analyzed 9.000
if changed, why

Trap I.D. 017
Volume Collected 9.000 Burnout Volume 9.000

BAG ANALYSIS

Date 5/28/88 Analyst MSB/JP

				Average
NMHC	307720	311460	305910	308363
CO	36010	36713	36110	36278
CO_2	<3	<3	<3	<3
CH_4	95226	94155	94355	94578

TRAP ANALYSIS

Date 5/30/88 Temperature 300 C Analyst MSB/JP

				Average
NMHC	<3	<3	<3	<3
CO	<3	<3	<3	<3
CO_2	38070	38831	38170	38357
CH_4	<3	<3	<3	<3

General Comments

VOC = volatile organic carbon - This is the sum of the VOC collected in the trap plus any VOC that passes through the trap into the bag. In the analysis the bag portion is the BAG NMHC (nonmethane hydrocarbon); the trap is burned out and all the VOC converted to carbon dioxide prior to analysis thus the trap portion is the TRAP CO_2.

$$VOC_+ \text{ lb/hr} = \frac{(VOC\ BAG_{ave} + VOC\ TRAP_{ave})\ SCF+}{32 \times 10^6}$$

$$VOC_+ \text{ lb/hr} = \frac{(308363 \text{ bag} + 38357 \text{ trap})\ 0\ \text{Discharge SCF+}}{32 \times 10^6}$$

VOC_+ = 346720 PPM

BONNER ANALYTICAL TESTING COMPANY
RT. 14, BOX 509
HATTIESBURG, MS 39401
(601) 264-2854

Facility Hercules, Inc.

Location 182 - Ammonia Scrubber

Run # 3

1. Standard Cubic Feet Per Run (Vms)

$$Vms = 17.647 \times Ym \ (Vmf - Vmi) \ \frac{\frac{\Delta Pm}{(Pb + 13.6)}}{Tm}$$

Vms = Zero Discharge

2. Standard Cubic Feet Per Hour (SCFH)

$$SCFH = \frac{Vms}{HR} = \boxed{<0.001}$$

3. Gas Flow Rate

$$Qs = \frac{Vms}{\theta}$$

1. Ammonia conc.(cn) in stack (mg/m3)
Cn = Cr X Vt X 1000/Vs(std)

Run 1 = (319.2) (0.05) (1000)/8.912

Cn = 1791 mg/m3 ppm = 2534

Run 2 = (305.2) (0.05) (1000)/8.912

Cn = 1712 mg/m3 ppm = 2422

Run 3 = (313.6) (0.05) (1000)/8.912

Cn = 1759 mg/m3 ppm = 2489

2. Ammonia conc.(Ac) 16/hr

$$Ac(lb/hr) = \frac{Cn \times Qs}{453600 \times 35.3}$$

Run 1 = NA

Ac =

Run 2 = NA

Ac =

Run 3 = NA

Ac =

Cr = concentration in mg/l of sample.

V_t = liters of sample in impinger.

V_{STD} = liters of sample collected.

BONNER ANALYTICAL TESTING COMPANY
RT. 14, BOX 509
HATTIESBURG, MS 39402
(601) 264-2854

~~AMMONIA~~
~~EPA METHOD 25~~
VIA
NIOSH METHOD 205
~~VOLATILE ORGANIC CARBON~~

Facility Hercules Inc

Location 182 Amm. Scrubber

Date 5/26/88 Operator JP/MSB

Run # 1
Bag # NA
Trap # NA

Barometric Press (in Hg) 30.06

Ambient Temp. (F) 82

Wet Bulb 67
Dry Bulb 81
% Moisture <1

Sample Train Leak Rate (<1 cc/min) <1.

Pretest Vacuum 30 in H_2O <0.3 in/min Leakrate (<.5 in/min)

Post Test Vacuum 30 in H_2O <0.3 in/min Leakrate (<1.6 in/min)

DRY GAS METER

Meter # 336323

Meter Coef: 0.991

Date Calibrated 5/19/88

	Time Clock/Sample	Mass Flow Meter Reading	Source Volumetric Flow Data: Dry Gas Meter Cubic feet	Dry Gas Meter Temp(F)	Static Press (in H_2O)
I	1135	150 cc/min			
1	1145	150			
2	1155	150			
3	1205	150			
4	1215	150			
5	1225	150			
6	1235	150			
7	1245				
8					
9					
10					
11					
12					

$$V_{STD} = FR * \theta * \left(\frac{P_{bar} * T_{STD}}{P_{STD} \; T_m}\right)^{0.5}$$

$$V_{STD} = 0.15 * 60 \left(\frac{30.06}{29.92} * \frac{528}{541}\right)^{.5}$$

$V_{STD} = 8.912$ liters

Total 60 min .150L/min

Average 9 Liters

BONNER ANALYTICAL TESTING COMPANY
RT. 14, BOX 509
HATTIESBURG, MS 39402
(601) 264-2854

EPA METHOD 25

VOLATILE ORGANIC CARBON

Facility Hercules Inc

Location 182 Ammonia Scrubber

Date 5/26/88 Operators JP/MSB

Run # 1
Bag # 020
Trap # 020

Barometric Press (in Hg) 30.06

Ambient Temp. (F) 82

Wet Bulb 67
Dry Bulb 81
% Moisture <1

Sample Train Leak Rate (<1 cc/min) <1.0

Pretest Vacuum 30 in H_2O <0.25 in/min Leakrate (<1.5 in/min)

Post Test Vacuum 30 in H_2O <0.25 in/min Leakrate (<1.5 in/min)

DRY GAS METER

Meter # 336323

Meter Coef: 0.991

Date Calibrated 5/19/88

	Time Clock/Sample	Mass Flow Meter Reading	Source Volumetric Flow Data: Cubic feet	Dry Gas Meter Temp(F)	Static Press (in H_2O)
I	1135	100	493.645	82	<0.1
1	1145	100	493.645	82	<0.1
2	1155	100	493.645	82	<0.1
3	1205	100	493.645	82	<0.1
4	1215	100	493.645	82	<0.1
5	1225	100	493.645	82	<0.1
6	1235	100	493.645	82	<0.1
7					
8					
9					
10					
11					
12					
Total	60				
Average		100 cc/min 6000		82 542	<0.1 30.06

BONNER ANALYTICAL TESTING COMPANY
RT. 14, BOX 509
HATTIESBURG, MS 39402
(601) 264-2854

BYRON METHOD 25 Lab Data Sheet

FACILITY Hercules

LOCATION 182 RUN 1

Bag I.D. 020
Volume Collected 6.000 Volume Analyzed 6.000
if changed, why

Trap I.D. 020 6.000
Volume Collected Burnout Volume 5.000

BAG ANALYSIS Date 5/28/88 Analyst MJB

				Average
NMHC	363,000	355,000	364000	360666
CO	42507	41967	42236	42237
CO_2	15	15	13	14
CH_4	110280	108222	108276	109242

TRAP ANALYSIS Date 5/29/88 Temperature 300 Analyst JP/MJB

				Average
NMHC	<3	<3	<3	<3
CO	85	86	87	86
CO_2	5750	5690	5711	5716
CH_4	<3	<3	<3	<3

General Comments

VOC = volatile organic carbon - This is the sum of the VOC collected in the trap plus any VOC that passes through the trap into the bag. In the analysis the bag portion is the BAG NMHC (nonmethane hydrocarbon); the trap is burned out and all the VOC converted to carbon dioxide prior to analysis thus the trap portion is the TRAP CO_2.

$$VOC_t \text{ lb/hr} = \frac{(VOC\ BAG_{ave} + VOC\ TRAP_{ave})\ SCFH}{32 \times 10^6}$$

$$VOC_t \text{ lb/hr} = \frac{(360666 \text{ bag} + 5716 \text{ trap})\ \text{Zero Discharge SCFH}}{32 \times 10^6}$$

VOC_t = 366382 DPMA

BONNER ANALYTICAL TESTING COMPANY
RT. 14, BOX 509
HATTIESBURG, MS 39401
(601) 264-2854

Facility Hercules Inc

Location 182

Run 1

1. Standard Cubic Feet Per Run (Vms)

$$Vms = 17.647 \times Ym \ (Vmf - Vmi) \ \frac{(Pb + \frac{DPm}{13.6})}{Tm}$$

Vms = Zero Discharge

=

2. Standard Cubic Feet Per Hour (SCFH)

$$SCFH = \frac{Vms}{HR} \quad (0.00)$$

3. Gas Flow Rate

$$Qs = \frac{Vms}{J}$$

BONNER ANALYTICAL TESTING COMPANY
RT. 14, BOX 509
HATTIESBURG, MS 39402
(601) 264-2854

Ammonia
~~EPA METHOD 25~~
NIOSH METHOD 205
~~VOLATILE ORGANIC CARBON~~

Facility Hercules Inc

Location 18 2 Amm Scrubber

Date 5/26/88 Operators JP/MAB

Run # 2
Bag # N
Trap # N

Barometric Press (in Hg) 30.06

Ambient Temp. (F) 82

Wet Bulb 67
Dry Bulb 81
% Moisture <1

Sample Train Leak Rate (<1 cc/min) <1

Pretest Vacuum 30 in H_2O 0.35 Leakrate (<1.0 cc/min)

Post Test Vacuum 30 in H_2O 0.35 Leakrate (<1.0 cc/min)

DRY GAS METER

Meter # 336323

Meter Coef: 0.991

Date Calibrated 5/19/88

	Time Clock/Sample	Mass Flow Meter Reading	Source Volumetric Flow Data: Cubic feet	Dry Gas Meter Temp(F)	Static Press (in H_2O)
1	1240	0+ 150 cc/min	$V_{STD} = fR * \theta \left(\frac{P_{bar} * T_{STD}}{P_{STD} * T_m} \right)^{0.5}$		
1	1280	150			
2	1300	150			
3	1310	180			
4	1320	150			
5	1330	150	$V_{STD} = 0.15 * 60 \left(\frac{30.06 * 528}{29.92 * 541} \right)^{0.5}$		
6	1340	150			
7					
8					
9					
10					
11					
12					

$V_{STD} = 8.912$ liters

Total 60 .160 L/min

Average 9.0

BONNER ANALYTICAL TESTING COMPANY
RT. 14, BOX 509
HATTIESBURG, MS 39402
(601) 264-2854

EPA METHOD 25

VOLATILE ORGANIC CARBON

Facility Hercules Inc

Location 182 - Ammonia Scrubber

Date 5/26/88 Operators JP/MSB

Run # 2
Bag # 030
Trap # 030

Barometric Press (in Hg) 30.06

Ambient Temp. (F) 82

Wet Bulb 67
Dry Bulb 81
% Moisture <1

Sample Train Leak Rate (<1 cc/min) <1

Pretest Vacuum 30 in H_2O 0.30 in/min Leakrate (<1.6 in/min)

Post Test Vacuum 30 in H_2O 0.35 in/min Leakrate (<1.6 in/min)

DRY GAS METER

Meter # 336323

Meter Coef: 0.991

Date Calibrated 5/19/88

	Time	Mass Flow	Source Volumetric Flow Data		
	Clock/Sample	Meter Reading	Cubic feet	Dry Gas Meter Temp(F)	Static Press (in H_2O)
I	1240	140 cc/min	493.645	82	<0.1
1	1250	140	493.64	82	<0.1
2	1300	140	493.64	82	<0.1
3	1316	140	493.64	82	<0.1
4	1320	140	493.64	82	<0.1
5	1336	140	493.645	82	<0.1
6	1340	140			
7					
8					
9					
10					
11					
12					
Total	60		-0-		
Average		140 cc/min		82 (542R)	<0.1 (30.06)
		8.400			

BONNER ANALYTICAL TESTING COMPANY
RT. 14, BOX 509
HATTIESBURG, MS 39402
(601) 264-2854

BYRON METHOD 25 Lab Data Sheet

FACILITY Hercules Inc

LOCATION 182 RUN 2

Bag I.D. 030
Volume Collected 8.400 Volume Analyzed 8.400
if changed, why

Trap I.D. 030
Volume Collected 8.400 Burnout Volume 8.9.250

BAG ANALYSIS Date 5/28/88 Analyst MSB/JP

				Average
NMHC	400266	408270	392260	400 265
CO	46'343	45410	47'170	46307
CO_2	<3	<3	<3	<3
CH_4	116920	114580	119,250	116916

TRAP ANALYSIS Date 5/30/88 Temperature 300 Analyst JP/MSB

				Average
NMHC	<3	<3	<3	<3
CO	<3	<3	<3	<3
CO_2	17045	16877	16804	16908
CH_4	<3	<3	<3	<3

General Comments

VOC = volatile organic carbon - This is the sum of the VOC collected in the trap plus any VOC that passes through the trap into the bag. In the analysis the bag portion is the BAG NMHC (nonmethane hydrocarbon); the trap is burned out and all the VOC converted to carbon dioxide prior to analysis thus the trap portion is the TRAP CO_2.

$$VOC_t \text{ lb/hr} = \frac{(VOC\ BAG_{ave} + VOC\ TRAP_{ave})\ SCFH}{32 \times 10^6}$$

Zero Discharge

$$VOC_t \text{ lb/hr} = \frac{(400265 \text{ bag} + 16908 \text{ trap})\ 0\ SCFH}{32 \times 10^6}$$

VOC_t = 417173 PPM

BONNER ANALYTICAL TESTING COMPANY
RT. 14, BOX 509
HATTIESBURG, MS 39401
(601) 264-2854

Facility Hercules

Location 182

Run 2

1. Standard Cubic Feet Per Run (Vms)

$$Vms = 17.647 \times Ym \, (Vmf - Vmi) \, \frac{(Pb + \frac{DPm}{13.6})}{Tm}$$

Vms = Zero Discharge

=

2. Standard Cubic Feet Per Hour (SCFH)

$$SCFH = \frac{Vms}{HR}$$ <0.001

3. Gas Flow Rate

$$Qs = \frac{Vms}{J}$$

BONNER ANALYTICAL TESTING COMPANY
RT. 14, BOX 509
HATTIESBURG, MS 39402
(601) 264-2854

EPA METHOD 25

VOLATILE ORGANIC CARBON

Facility Hercules Inc

Location 182 Ammonia Sandbar

Date 5/26/88 Operators JP/MSB

Run # 3
Bag # N
Trap # N

Barometric Press (in Hg) 30.06

Ambient Temp. (F) 83

Wet Bulb 69
Dry Bulb 83
% Moisture <1

Sample Train Leak Rate (<1 cc/min) <1

Pretest Vacuum 30 in H_2O 0.35 Leakrate (<1.6 in/min)

Post Test Vacuum 30 in H_2O 0.35 Leakrate (<1.6 in/min)

DRY GAS METER

Meter # 336323

Meter Coef: 0.991

Date Calibrated 5/19/88

	Time Clock/Sample	Mass Flow Meter Reading	Source Volumetric Flow Data: Cubic feet	Dry Gas Meter Temp(F)	Static Press (in H_2O)
I	1345	150 cc/min			
1	1355	150	$V_{STD} = FR * \theta * \left(\frac{P_{bar}\ T_{STD}}{P_{STD}\ T_m}\right)^{.5}$		
2	1405	150			
3	1415	150			
4	1425	150			
5	1435	150	$V_{STD} = 0.15 * 60 \left(\frac{30.06\ 528}{29.92\ 543}\right)^{.5}$		
6	1445	150			
7					
8					
9			V_{STD} 8.912 Liters		
10					
11					
12					

Total 60 0.150 L/min

Average 9 Liters

BONNER ANALYTICAL TESTING COMPANY
RT. 14, BOX 509
HATTIESBURG, MS 39402
(601) 264-2854

EPA METHOD 25

VOLATILE ORGANIC CARBON

Facility Hercules Inc

Location 182 - Ammonia Scrubber

Date 5/26/88 Operators JP/WSB

Run # 3
Bag # 017
Trap # 017

Barometric Press (in Hg) 30.06

Ambient Temp. (F) 83

Wet Bulb 69
Dry Bulb 83
% Moisture <1

Sample Train Leak Rate ((1 cc/min) <1

Pretest Vacuum 30 in H_2O 0.30 in/min Leakrate ((1.6 in/min)

Post Test Vacuum 30 in H_2O 0.30 in/min Leakrate ((1.6 in/min)

DRY GAS METER

Meter # 336323

Meter Coef: 0.991

Date Calibrated 5/19/88

	Time Clock/Sample	Mass Flow Meter Reading	Source Volumetric Flow Data: Cubic feet	Dry Gas Meter Temp(F)	Static Press (in H_2O)
I	1345	150	493.645	83	<0.1
1	1355	150	493.645	83	<0.1
2	1405	150	493.645	83	<0.1
3	1415	150	493.645	83	<0.1
4	1425	150	493.645	83	<0.1
5	1435	150	493.645	83	<0.1
6	1445	150	493.645	83	<0.1
7			493.645		
8					
9					
10					
11					
12					

Total 900 Zero Discharge

Average 150 cc/min 83 (543R) (30.06)
9,000

BONNER ANALYTICAL TESTING COMPANY
RT. 14, BOX 509
HATTIESBURG, MS 39402
(601) 264-2854

BYRON METHOD 25 Lab Data Sheet

FACILITY Hercules

LOCATION 182 RUN 3

Bag I.D. 017
Volume Collected 9.000 Volume Analyzed 9.000
if changed, why

Trap I.D. 017
Volume Collected 9.000 Burnout Volume 9.000

BAG ANALYSIS Date 5/28/88 Analyst JP/MSB

				Average
NMHC	307720	311460	305910	308363
CO	36010	36713	36110	36278
CO_2	<3	<3	<3	<3
CH_4	95226	94155	94355	94578

TRAP ANALYSIS

Date 5/30/88 Temperature 300 Analyst JP/MSB

				Average
NMHC	<3	<3	<3	<3
CO	<3	<3	<3	<3
CO_2	38070	38831	38176	38357
CH_4	<3	<3	<3	<3

General Comments

VOC = volatile organic carbon - This is the sum of the VOC collected in the trap plus any VOC that passes through the trap into the bag. In the analysis the bag portion is the BAG NMHC (nonmethane hydrocarbon); the trap is burned out and all the VOC converted to carbon dioxide prior to analysis thus the trap portion is the TRAP CO_2.

$$VOC_t \text{ lb/hr} = \frac{(VOC\ BAG_{ave} + VOC\ TRAP_{ave})\ SCFH}{32 \times 10^6}$$

$$VOC_t \text{ lb/hr} = \frac{(308363_{bag} + 38357_{trap})\ \text{Zero Discharge SCFH}}{32 \times 10^6}$$

VOC_t = 346720 PPM

BONNER ANALYTICAL TESTING COMPANY
RT. 14, BOX 509
HATTIESBURG, MS 39401
(601) 264-2854

Facility Hercules

Location 182

Run 3

1. Standard Cubic Feet Per Run (Vms)

$$Vms = 17.647 \times Ym\ (Vmf - Vmi)\ \frac{(Pb + \frac{DPm}{13.6})}{Tm}$$

Vms = Zero Discharge

=

2. Standard Cubic Feet Per Hour (SCFH)

$$SCFH = \frac{Vms}{HR}$$ 20.021

3. Gas Flow Rate

$$Qs = \frac{Vms}{J}$$

Comp 2

1

1. Ammonia conc. (cn) in stack (mg/m3)
Cn = Cr X Vt X 1000/Vs(std)

=

Run 1 = (319.2)(0.05)(1000)/ 8.912

Cn = 1791 mg/m3 ppm = 2534

Run 2 = (305.2)(0.05)(1000)/8.912

Cn = 1712 mg/m3 ppm = 2422

Run 3 = (313.6)(0.05)(1000)/8.912

Cn = 1759 mg/m3 ppm = 2489

2. Ammonia conc. (Ac) lb/hr

$$Ac(lb/hr) = \frac{Cn \times Qs}{453600 \times 35.3}$$

Run 1 = NA

Ac = lb/hr NA

Run 2 =

Ac = lb/hr NA

Run 3 =

Ac = lb/hr

Cr = ~~mg(NH4) found in impingers~~ Conc in mg/L of Sample in impinger

Vt = Liters of sample in impinger

V_{STD} = Liters of Sample Collected

MISSISSIPPI DEPARTMENT OF NATURAL RESOURCES
Bureau of Pollution Control
P.O. Box 10385
Jackson, Mississippi 39289-0385
(601) 961-5171

MEMORANDUM

TO: File

FROM: Jesse Thompson, Jr.

SUBJECT: Stack Test Review

DATE: June 8, 1989



Facility No. 110-0800-00001-183

The review of the test data for the Amine Water scrubber has been finished. The emission point was tested using Method 25. The review did not reveal any problems. I recommend that the test be accepted.

JT:cm

BONNER ANALYTICAL TESTING COMPANY
RT. 14, BOX 509
HATTIESBURG, MS 39402
(601) 264 2264

EPA METHOD 25

VOLATILE ORGANIC CARBON

Facility Hercules, Inc.

Location 183 - Amine Water Scrubber

Date 6/1/88 Operators JP

Run # 1
Bag # 024
Trap # 024

Barometric Press (in Hg) 30.04

Ambient Temp. (F) 88

Wet Bulb _____
Dry Bulb _____
% Moisture _____

Sample Train Leak Rate (<1 cc/min) <1

Pretest Vacuum 30 in H_2O 0.30 in/min Leakrate (<1.6 in/min)

Post Test Vacuum 30 in H_2O 0.30 in/min Leakrate (<1.6 in/min)

DRY GAS METER

Meter # 3363323 Rockwell (250 CFF)

Meter Coef: 0.991

Date Calibrated 5/19/88

Source Volumetric Flow Data

	Time Clock/Sample	Mass Flow Meter Reading	Cubic feet	Dry Gas Meter Temp (F)	Static Press (in H_2O)
I	1120	125 cc/min	493.72	100	<0.1
1	1130	125 cc/min	493.72	100	<0.1
2	1140	125 cc/min	493.72	100	<0.1
3	1150	125 cc/min	493.72	100	<0.1
4	1200	125 cc/min	493.72	100	<0.1
5	1210	125 cc/min	493.72	100	<0.1
6	1220	125 cc/min	493.72	100	<0.1
7					
8					
9					
10					
11					
12					

Total 60 750 cc/min 0 Discharge 88 C

Average 125 cc/min (7.500) 100 (5605) <0.1 (30.04)

BUNNER ANALYTICAL TESTING COMPANY
RT. 14, BOX 509
HATTIESBURG, MS 39402
(601) 264-2954

BYRON METHOD 25 Lab Data Sheet

FACILITY Hercules, Inc.

LOCATION 183 - WS RUN #1

Bag I.D. 024
Volume Collected 7.500 Volume Analyzed 7.500
if changed, why

Trap I.D. 024
Volume Collected 7.500 Purrout Volume 7.500

BAG ANALYSIS

Date 6/2/88 Analyst JP

				Average
NMHC	23496	26152	24822	24726
CO	30.6	34	32	32
CO_2	264	240	251	251
CH_4	35000	38166	36642	36602

TRAP ANALYSIS

Date 6/2/88 Temperature 300 C Analyst JP/ MSB

				Average
NMHC	<3	<3	<3	<3
CO	<3	<3	<3	<3
CO_2	596	635	619	617
CH_4	<3	<3	<3	<3

General Comments

VOC = volatile organic carbon - This is the sum of the VOC collected in the trap plus any VOC that passes through the trap into the bag. In the analysis the bag portion is the BAG NMHC (nonmethane hydrocarbon) & the trap is burned out and all the VOC converted to carbon dioxide prior to analysis thus the trap portion is the TRAP CO_2.

$$VOC_+ \text{ lb/hr} = \frac{(\text{VOC BAG}_{ave} + \text{VOC TRAP}_{ave})\ SCFM}{32 \times 10^6}$$

$$VOC_+ \text{ lb/hr} = \frac{(\ 24726\ \text{bag} + \ 617\ \text{trap})\ 2\ \text{discrete SCFM}}{32 \times 10^6}$$

$$VOC_+ = \boxed{25,343 \text{ ppm}}$$

BONNER ANALYTICAL TESTING COMPANY
RT. 14, BOX 509
HATTIESBURG, MS 39401
(601) 264-2854

Facility Hercules, Inc.

Location 183 - Amine Water Scrubber

Run #1

1. Standard Cubic Feet Per Run (Vms)

$$Vms = 17.647 \times Ym \ (Vmf - Vmi) \ \frac{(Pb + \frac{\Delta Pm}{13.6})}{Tm}$$

= 0 Discharge

2. Standard Cubic Feet Per Hour (SCFH)

$$SCFH = \frac{Vms}{HR} = 0 \text{ Discharge}$$

3. Gas Flow Rate

$$Qs = \frac{Vms}{\theta}$$

BONNER ANALYTICAL TESTING COMPANY
RT. 14, BOX 309
HATTIESBURG, MS 39402
(601) 264-2854

EPA METHOD 25

VOLATILE ORGANIC CARBON

Facility Hercules, Inc.

Location 183 - Amine Water Scrubber

Date 6/1/88 Operators JP

Run # 2
Bag # 031
Trap # 031

Barometric Press (in Hg) 30.05

Ambient Temp. (F) 88

Wet Bulb
Dry Bulb
% Moisture

Sample Train Leak Rate (<1 cc/min) <1

Pretest Vacuum 30 in H_2O 0.35 in/min Leakrate (<1.6 in/min)

Post Test Vacuum 30 in H_2O 0.30 in/min Leakrate (<1.6 in/min)

DRY GAS METER

Meter # Rockwell 3363323 (250 CFF)

Meter Coef: 0.991

Date Calibrated 5/19/88

	Time	Mass Flow	Source Volumetric Flow Data: Dry Gas Meter		
	Clock/Sample	Meter Reading	Cubic feet	Temp (C)	Static Press (in H_2O)
I	1225	125 cc/min	493.72	38	<0.1
1	1235	125 cc/min	493.72	38	<0.1
2	1245	125 cc/min	493.72	38	<0.1
3	1255	125 cc/min	493.72	38	<0.1
4	1305	125 cc/min	493.72	38	<0.1
5	1315	125 cc/min	493.72	38	<0.1
6	1325	125 cc/min	493.72	38	<0.1
7					
8					
9					
10					
11					
12					
Total	60	750 cc/min	0 Discharge	38 C	
Average		125 cc/min (7,500)	100 (5693)	38	<0.1 (30.05)

RT. 14, BOX 509
HATTIESBURG, MS 39402
(601) 264-2854

BYRON METHOD 25 Lab Data Sheet

FACILITY Hercules, Inc.

LOCATION 183 - WS RUN #2

Bag I.D. 031
Volume Collected 7.500 Volume Analyzed 7.500
if changed, why

Trap I.D. 031
Volume Collected 7.500 Burnout Volume

BAG ANALYSIS

Date 6/2/88 Analyst JP

				Average
NMHC	18394	17998	18666	18353
CO	40	41	40	40
CO_2	344	338	338	340
CH_4	27042	27210	26950	27067

TRAP ANALYSIS

Date 6/2/88 Temperature 300 C Analyst JP

				Average
NMHC	<3	<3	<3	<3
CO	<3	<3	<3	<3
CO_2	1262	1214	1237	1238
CH_4	<3	<3	<3	<3

General Comments

VOC = volatile organic carbon - This is the sum of the VOC collected in the trap plus any VOC that passes through the trap into the bag. In the analysis the bag portion is the BAG NMHC (nonmethane hydrocarbon); the trap is burned out and all the VOC converted to carbon dioxide prior to analysis thus the trap portion is the TRAP CO_2.

$$VOC_+ \text{ lb/hr} = \frac{(VOC\ BAG_{avg} + VOC\ TRAP_{avg})\ SCFM}{32 \times 10^6}$$

$$VOC_+ \text{ lb/hr} = \frac{(\ 18353\ \text{bag} + \ 1238\ \text{trap})\ @\ \text{Discharge}\ SCFM}{32 \times 10^6}$$

$$VOC_+ = \boxed{19,591 \text{ ppm}}$$

BUNNER ANALYTICAL TESTING COMPANY
RT. 14, BOX 509
HATTIESBURG, MS 39401
(601) 264-2054

Facility Hercules, Inc.

Location 183 - Amine Water Scrubber

Run #2

1. Standard Cubic Feet Per Run (Vms)

$$Vms = 17.647 \times Ym \ (Vmf - Vmi) \ \frac{\frac{\Delta Pm}{(Pb + 13.6)}}{Tm}$$

= 0 Discharge

2. Standard Cubic Feet Per Hour (SCFH)

$$SCFH = \frac{Vms}{HR} = <0.001$$

3. Gas Flow Rate

$$Gs = \frac{Vms}{\theta}$$

RT. 14, BOX 509
HATTIESBURG, MS 39402
(601) 264-2854

EPA METHOD 25

VOLATILE ORGANIC CARBON

Facility Hercules, Inc.

Location 183 - Amine Water Scrubber (RAD)

Date 6/1/98 Operators JP

Run # 3
Bag # 033
Trap # 033

Barometric Press (in Hg) 30.05

Ambient Temp. (F) 88

Wet Bulb
Dry Bulb
% Moisture

Sample Train Leak Rate (<1 cc/min) <1

Pretest Vacuum 30 in H_2O 0.35 in/min Leakrate (<1.6 in/min)

Post Test Vacuum 30 in H_2O 0.35 in/min Leakrate (<1.6 in/min)

DRY GAS METER

Meter # Rockwell 3363323 (250 CFF)

Meter Coef: 0.991

Date Calibrated 5/19/88

	Time Clock/Sample	Mass Flow Meter Reading	Source Volumetric Flow Data: Cubic feet	Dry Gas Meter Temp (C)	Static Press (in H_2O)
I	1330	125 cc/min	493.72	38	<0.1
1	1340	125 cc/min	493.72	38	<0.1
2	1350	125 cc/min	493.72	39	<0.1
3	1400	125 cc/min	493.72	40	<0.1
4	1410	125 cc/min	493.72	41	<0.1
5	1420	125 cc/min	493.72	42	<0.1
6	1430	125 cc/min	493.72	42	<0.1
7					
8					
9					
10					
11					
12					

Total 60 750 cc/min 0 Discharge 38 C

Average 125 cc/min (7.500) 40 (E64R) <0.1 (30.05)

BYRON METHOD 25 Lab Data Sheet

FACILITY Hercules, Inc.

LOCATION 183 - WS RUN #3

Bag I.D. 033
Volume Collected 7.500 Volume Analyzed 7.500
if changed, why

Trap I.D. 033
Volume Collected 7.500 Burnout Volume 7.500

BAG ANALYSIS

Date 6/1/88 Analyst JP

				Average
NMHC	14369	14085	14656	14370
CO	38	38	38	38
CO_2	398	401	401	400
CH_4	21430	21772	21374	21525

TRAP ANALYSIS

Date 6/1/88 Temperature 300 C Analyst JP

				Average
NMHC	<3	<3	<3	<3
CO	<3	<3	<3	<3
CO_2	1981	2025	1947	1984
CH_4	<3	<3	<3	<3

General Comments

VOC = volatile organic carbon - This is the sum of the VOC collected in the trap plus any VOC that passes through the trap into the bag. In the analysis the bag portion is the BAG NMHC (nonmethane hydrocarbon) & the trap is burned out and all the VOC converted to carbon dioxide prior to analysis thus the trap portion is the TRAP CO_2.

$$VOC_+ \text{ lb/hr} = \frac{(\text{VOC BAG}_{ave} + \text{VOC TRAP}_{ave})\ \text{SCFH}}{32 \times 10^6}$$

$$VOC_+ \text{ lb/hr} = \frac{(14370 \text{ bag} + 1984 \text{ trap})\ \text{C Discharge SCFH}}{32 \times 10^6}$$

$$VOC_+ = \boxed{16354 \text{ ppm}}$$

BONNER ANALYTICAL TESTING COMPANY
RT. 14, BOX 509
HATTIESBURG, MS 39401
(601) 264-2854

Facility Hercules, Inc.

Location 183 - Amine Water Scrubber

Run #3

1. Standard Cubic Feet Per Run (Vms)

$$Vms = 17.647 \times Ym\ (Vmf - Vmi)\ \frac{\frac{\Delta Pm}{(Pb + 13.6)}}{Tm}$$

= 0 Discharge

2. Standard Cubic Feet Per Hour (SCFH)

$$SCFH = \frac{Vms}{HR} = <0.001$$

3. Gas Flow Rate

$$Qs = \frac{Vms}{\theta}$$

BONNER ANALYTICAL TESTING COMPANY
RT. 14, BOX 509
HATTIESBURG, MS 39402
(601) 264-2854

EPA METHOD 25

VOLATILE ORGANIC CARBON

Facility Hercules

Location 183 Amine Water Scrubber (Rad)

Date 6-1-88 Operators Joel

Run # 1
Bag # 024
Trap # 024

Barometric Press (in Hg) 30.04

Ambient Temp. (F) 88°

Wet Bulb —
Dry Bulb —
% Moisture

Sample Train Leak Rate ((1 cc/min) ~~<40 cc/min~~ <1.0CC/min

Pretest Vacuum 30 in H_2O 0.30 in/min Leakrate ((1.6 in/min)

Post Test Vacuum 30 in H_2O 0.30 in/min Leakrate ((1.6 in/min)

DRY GAS METER

Meter # Rockwell 250cfh #3363323

Meter Coef: 0.991

Date Calibrated 5/19/88

	Time Clock/Sample	Mass Flow Meter Reading	Source Volumetric Flow Data: Cubic feet	Dry Gas Meter Temp(F)	Static Press (in H_2O)
I	11:20	125 cc/min	493.72	~~38C~~ 100	E <.1
1	11:30	125 cc/min	493.72	~~38C~~ 100	<.1
2	11:40	125 cc/min	493.72	~~38°C~~ 100	<.1
3	11:50	125 cc/min	493.72	~~38°C~~ 100	<.1
4	12:00	125 cc/min	493.72	~~38°C~~ 100	<.1
5	1210	125 cc/min	493.72	~~38°C~~ 100	<.1
6	12.20	125 cc/min	493.72	38°C 100	<.1
7					
8					
9					
10					
11					
12					
Total	1 Hr	750 CC	0	38°C	
Average	60min	125cc/min	Zero Discharge	100 (560R)	<0.1 (30.04)

BONNER ANALYTICAL TESTING COMPANY
RT. 14, BOX 509
HATTIESBURG, MS 39402
(601) 264-2854

BYRON METHOD 25 Lab Data Sheet

FACILITY Hercules Inc

LOCATION 183 Amine Unit Scrubber 1

Bag I.D. 024
Volume Collected 7.500 Volume Analyzed 7.500
if changed, why

Trap I.D. 024
Volume Collected ____ Burnout Volume 7.500

BAG ANALYSIS Date 7.500 Analyst ~~7.500~~ JP

				Average
NMHC	23496	26162	24522	24726
CO	30.6	34	32.	32
CO_2	264	240	251	251
CH_4	35000	38166	36642	36602

TRAP ANALYSIS Date 06/02/88 Temperature 300°C Analyst MSG/JP

				Average
NMHC	<3	<3	<3	<3
CO	<3	<3	<3	<3
CO_2	596	635	619	617
CH_4	<3	<3	<3	<3

General Comments

VOC = volatile organic carbon - This is the sum of the VOC collected in the trap plus any VOC that passes through the trap into the bag. In the analysis the bag portion is the BAG NMHC (nonmethane hydrocarbon); the trap is burned out and all the VOC converted to carbon dioxide prior to analysis thus the trap portion is the TRAP CO_2.

$$VOC_t \text{ lb/hr} = \frac{(VOC\ BAG_{ave} + VOC\ TRAP_{ave})\ SCFH}{32 \times 10^6}$$

$$VOC_t \text{ lb/hr} = \frac{(24726_{bag} + 617_{trap})\ \text{Zero Discharge SCFH}}{32 \times 10^6}$$

VOC_t = 25343 PPM

BONNER ANALYTICAL TESTING COMPANY
RT. 14, BOX 509
HATTIESBURG, MS 39401
(601) 264-2854

Facility Hercules

Location 183 Amine Water Scrubber

Run 1

1. Standard Cubic Feet Per Run (Vms)

$$Vms = 17.647 \times Ym \, (Vmf - Vmi) \, \frac{(Pb + \frac{DPm}{13.6})}{Tm}$$

Vms = Zero Discharge <0.001

=

2. Standard Cubic Feet Per Hour (SCFH)

$$SCFH = \frac{Vms}{HR}$$ <0.001

3. Gas Flow Rate

$$Qs = \frac{Vms}{J}$$

BONNER ANALYTICAL TESTING COMPANY
RT. 14, BOX 509
HATTIESBURG, MS 39402
(601) 264-2854

EPA METHOD 25

VOLATILE ORGANIC CARBON

Facility Hercules

Location 183 Amine Water Scrubber (RAD)

Date 6-1-88 Operators Joel

Run # 2
Bag # 031
Trap # 031

Barometric Press (in Hg) 30.05

Ambient Temp. (F) 88°

Wet Bulb
Dry Bulb
% Moisture

Sample Train Leak Rate ((1 cc/min) .1 cc/min

Pretest Vacuum 30 in H_2O 0.35 in/min Leakrate ((1.6 in/min)

Post Test Vacuum 30 in H_2O 0.30 in/min Leakrate ((1.6 in/min)

DRY GAS METER

Meter # Rockwell 250CFH #3363323

Meter Coef: 0.991

Date Calibrated 5/19/88

	Time	Mass Flow	Source Volumetric Flow Data		
	Clock/Sample	Meter Reading	Cubic feet	Dry Gas Meter Temp(F)	Static Press (in H_2O)
I	12:25	125 cc/min	493.72	38°C	<.1
1	12:35	125 cc/min	493.72	38°C	<.1
2	12:45	125 cc/min	493.72	38°C	<.1
3	12:55	125 cc/min	493.72	38°C	<.1
4	13:05	125 cc/min	493.72	38°C	<.1
5	13:15	125 cc/min	493.72	38°C	<.1
6	13:25	125 cc/min	493.72	38°C	<.1
7					
8					
9					
10					
11					
12					
Total	1 HR	750 cc	No Flow	38°C	
Average		125 cc/min		100 (560R)	(30.05)

BONNER ANALYTICAL TESTING COMPANY
RT. 14, BOX 509
HATTIESBURG, MS 39402
(601) 264-2854

BYRON METHOD 25 Lab Data Sheet

FACILITY Hercules

LOCATION 183 RUN 2

Bag I.D. Q31
Volume Collected 7.500 Volume Analyzed 7.500
if changed, why

Trap I.D. Q31
Volume Collected 7.500 Burnout Volume

BAG ANALYSIS Date 6/2/88 Analyst JP

				Average
NMHC	18394	17998	18666	18353
CO	40	41	40	40
CO_2	344	338	338	340
CH_4	27042	27210	26950	27067

TRAP ANALYSIS Date 6/2/88 Temperature 318 Analyst JP

				Average
NMHC	<3	<3	<3	<3
CO	<3	<3	<3	<3
CO_2	1262	1214	1237	1238
CH_4	<3	<3	<3	<3

General Comments

VOC = volatile organic carbon - This is the sum of the VOC collected in the trap plus any VOC that passes through the trap into the bag. In the analysis the bag portion is the BAG NMHC (nonmethane hydrocarbon); the trap is burned out and all the VOC converted to carbon dioxide prior to analysis thus the trap portion is the TRAP CO_2.

$$VOC_t \text{ lb/hr} = \frac{(VOC\ BAG_{ave} + VOC\ TRAP_{ave})\ SCFH}{32 \times 10^6}$$

$$VOC_t \text{ lb/hr} = \frac{(18353 \text{ bag} + 1238 \text{ trap})\ \text{Zero Discharge}}{32 \times 10^6}$$

VOC_t = 19591 PPM

BONNER ANALYTICAL TESTING COMPANY
RT. 14, BOX 509
HATTIESBURG, MS 39401
(601) 264-2854

Facility Hercules Inc

Location 183 Amine Water Scrubber

Run 2

1. Standard Cubic Feet Per Run (Vms)

$$Vms = 17.647 \times Ym \ (Vmf - Vmi) \ \frac{(Pb + \frac{DPm}{13.6})}{Tm}$$

Vms = Zero Discharge

=

2. Standard Cubic Feet Per Hour (SCFH)

$$SCFH = \frac{Vms}{HR} \qquad < 0.001$$

3. Gas Flow Rate

$$Qs = \frac{Vms}{J}$$

BONNER ANALYTICAL TESTING COMPANY
RT. 14, BOX 509
HATTIESBURG, MS 39402
(601) 264-2854

EPA METHOD 25

VOLATILE ORGANIC CARBON

Facility Hercules

Location 183 Amine Water scrubber (RAD)

Date 6-1-88 Operators Sop

Run # 3
Bag # 033
Trap # 033

Barometric Press (in Hg) 30.05

Ambient Temp. (F) 88°F

Wet Bulb
Dry Bulb
% Moisture

Sample Train Leak Rate ((1 cc/min) < .1 cc/min

Pretest Vacuum 30 in H_2O 0.35 in/min Leakrate ((1.6 in/min)

Post Test Vacuum 30 in H_2O 0.35 in/min Leakrate ((1.6 in/min)

DRY GAS METER

Meter # Rockwell 250cfh #3363323

Meter Coef: .991

Date Calibrated 5/19/88

	Time Clock/Sample	Mass Flow Meter Reading	Source Volumetric Flow Data: Cubic feet	Dry Gas Meter Temp(F)	Static Press (in H_2O)
I	13:30	125 cc/m	493.72	38°C	< .1
1	13:40	125 cc/m	493.72	38°C	< .1
2	13:50	125 cc/m	493.72	39°C	< .1
3	14:00	125 cc/m	493.72	40°C	< .1
4	14:10	125 cc/m	493.72	41°C	< .1
5	14:20	125 cc/m	493.72	41°C	< .1
6	14:30	125 cc/m	493.72	42°C	< .1
7					
8					
9					
10					
11					
12					
Total	1 HR	750 cc	0		
Average		125 cc/min 7.500		40°C (564R)	(30.05)

BONNER ANALYTICAL TESTING COMPANY
RT. 14, BOX 509
HATTIESBURG, MS 39402
(601) 264-2854

BYRON METHOD 25 Lab Data Sheet

FACILITY Hercules

LOCATION 183-Amine WS RUN 3

Bag I.D. 033
Volume Collected 7.500 Volume Analyzed 7.500
if changed, why

Trap I.D. 033
Volume Collected 7.500 Burnout Volume 6.250

BAG ANALYSIS Date 6-1-88 Analyst JP

				Average
NMHC	14369	14085	14656	14370
CO	38	38	38	38
CO_2	398	401	401	400
CH_4	21430	21772	21314	21525

TRAP ANALYSIS Date 6/4/88 Temperature 300 Analyst JP

				Average
NMHC	<3	<3	<3	<3
CO	<3	<3	<3	<3
CO_2	1981	2025	1947	1984
CH_4	<3	<3	<3	<3

General Comments

VOC = volatile organic carbon - This is the sum of the VOC collected in the trap plus any VOC that passes through the trap into the bag. In the analysis the bag portion is the BAG NMHC (nonmethane hydrocarbon); the trap is burned out and all the VOC converted to carbon dioxide prior to analysis thus the trap portion is the TRAP CO_2.

$$VOC_t \text{ lb/hr} = \frac{(VOC\ BAG_{ave} + VOC\ TRAP_{ave})\ SCFH}{32 \times 10^6}$$

$$VOC_t \text{ lb/hr} = \frac{(14370_{bag} + 1984_{trap})\ Zero\ SCFH}{32 \times 10^6}$$

VOC_t = 11.2 ppm

BONNER ANALYTICAL TESTING COMPANY
RT. 14, BOX 509
HATTIESBURG, MS 39401
(601) 264-2854

Facility Hercules

Location 183-Amine US

Run 3

1. Standard Cubic Feet Per Run (Vms)

$$Vms = 17.647 \times Ym\ (Vmf - Vmi)\ \frac{(Pb + \frac{DPm}{13.6})}{Tm}$$

Vms = Zero Discharge

=

2. Standard Cubic Feet Per Hour (SCFH)

$$SCFH = \frac{Vms}{HR} \quad < 0.001$$

3. Gas Flow Rate

$$Qs = \frac{Vms}{J}$$

MISSISSIPPI DEPARTMENT OF NATURAL RESOURCES
Bureau of Pollution Control
P.O. Box 10385
Jackson, Mississippi 39289-0385
(601) 961-5171

MEMORANDUM

TO: File

FROM: Jesse Thompson, Jr.

SUBJECT: Stack Test Review

DATE: June 8, 1989

DATA CODE

Facility No. 110-0800-00001-190

The data submitted for the Polyrad test has been reviewed. The emission point was tested for Volatile Organic Carbon using Method 25. The review did not reveal any problems. I recommend that the test be accepted.

JT:cm

BONNER ANALYTICAL TESTING COMPANY
RT. 14, BOX 509
HATTIESBURG, MS 39402
(601) 264-2854

EPA METHOD 25

VOLATILE ORGANIC CARBON

Facility Hercules, Inc. - Hattiesburg, MS

Location 190 - Polyrad

Date 5/26/88 Operators JS/JP/MSB

Run # 1
Bag # 001
Trap # 001

Barometric Press (in Hg) 30.04

Ambient Temp. (F) 78

Wet Bulb 71
Dry Bulb 81
% Moisture <1

Sample Train Leak Rate (<1 cc/min) <1

Pretest Vacuum 30 in H_2O 0.35 in/min Leakrate (<1.6 in/min)

Post Test Vacuum 30 in H_2O 0.35 in/min Leakrate (<1.6 in/min)

DRY GAS METER

Meter # 75021

Meter Coef: 0.990

Date Calibrated 5/19/88

	Time	Mass Flow	Source Volumetric Flow Data		
				Dry Gas Meter	Static
	Clock/Sample	Meter Reading	Cubic feet	Temp (F)	Press (in H_2O)
I	0950	110 cc/min	2705	81	< 0.1
1	1000	110 cc/min	2705	81	< 0.1
2	1010	88 cc/min	2705	81	< 0.1
3	1020	114 cc/min	2705	85	< 0.1
4	1030	112 cc/min	2705	87	< 0.1
5	1040	110 cc/min	2705	87	< 0.1
6	1050	110 cc/min	2705	88	< 0.1
7					
8					
9					
10					
11					
12					
Total	60		0.0		
Average		108 cc/min		84 (544R)	<0.1 (30.04)

BONNER ANALYTICAL TESTING COMPANY
RT. 14, BOX 509
HATTIESBURG, MS 39402
(601) 264-2854

BYRON METHOD 25 Lab Data Sheet

FACILITY Hercules, Inc.

LOCATION 190 PolyRad RUN # 1

Bag I.D. 001
Volume Collected 6.480 Volume Analyzed 6.480
if changed, why

Trap I.D. 001
Volume Collected 6.480 Burnout Volume 6.500

BAG ANALYSIS

Date 6/05/88 Analyst MSB

				Average
NMHC	21823	21522	21576	21640
CO	24661	24611	24002	24424
CO_2	3409	3365	3369	3381
CH_4	5669	5602	5979	5750

TRAP ANALYSIS

Date 5/25/88 Temperature 300 C Analyst JP

				Average
NMHC	<3	<3	<3	<3
CO	21	22	22	22
CO_2	1342	1305	1344	1331
CH_4	<3	<3	<3	<3

General Comments

VOC = volatile organic carbon - This is the sum of the VOC collected in the trap plus any VOC that passes through the trap into the bag. In the analysis the bag portion is the BAG NMHC (nonmethane hydrocarbon); the trap is burned out and all the VOC converted to carbon dioxide prior to analysis thus the trap portion is the TRAP CO_2.

$$VOC_+ \text{ lb/hr} = \frac{(\text{VOC BAG}_{avg} + \text{VOC TRAP}_{avg})\ \text{SCFH}}{32 \times 10^6}$$

$$VOC_+ \text{ lb/hr} = \frac{(21640 \text{ bag} + 1331 \text{ trap})\ 0 \text{ Discharge SCFH}}{32 \times 10^6}$$

$$VOC_+ = \boxed{22971 \quad \text{PPM}}$$

BONNER ANALYTICAL TESTING COMPANY
RT. 14, BOX 509
HATTIESBURG, MS 39401
(601) 264-2854

Facility Hercules, Inc.

Location 190 PolyRad

Run # 1

1. Standard Cubic Feet Per Run (Vms)

$$Vms = 17.647 \times Ym\ (Vmf - Vmi)\ \frac{(Pb + \frac{\Delta Pm}{13.6})}{Tm}$$

Vms = 0 Discharge

= 0 Discharge

2. Standard Cubic Feet Per Hour (SCFH)

$$SCFH = \frac{Vms}{HR} = \text{0 Discharge}$$

3. Gas Flow Rate

$$Qs = \frac{Vms}{\theta}$$

BONNER ANALYTICAL TESTING COMPANY
RT. 14, BOX 509
HATTIESBURG, MS 39402
(601) 264-2854

EPA METHOD 25

VOLATILE ORGANIC CARBON

Facility Hercules, Inc. - Hattiesburg, MS

Location 190 - Polyrad

Date 5/26/88 Operators JS/JF/MSB

Run # 2
Bag # 002
Trap # 002

Barometric Press (in Hg) 30.04

Ambient Temp. (F) 80

Wet Bulb 70
Dry Bulb 82
% Moisture <1

Sample Train Leak Rate (<1 cc/min) <1

Pretest Vacuum 30 in H_2O 0.30 in/min Leakrate (<1.6 in/min)

Post Test Vacuum 30 in H_2O 0.30 in/min Leakrate (<1.6 in/min)

DRY GAS METER

Meter # 75021

Meter Coef: 0.990

Date Calibrated 5/17/88

	Source Volumetric Flow Data				
	Time	Mass Flow		Dry Gas Meter	Static
	Clock/Sample	Meter Reading	Cubic feet	Temp (F)	Press (in H_2O)
I	1100	110 cc/min	2705	86	< 0.1
1	1110	110 cc/min	2705	88	< 0.1
2	1120	110 cc/min	2705	84	< 0.1
3	1130	110 cc/min	2705	84	< 0.1
4	1140	110 cc/min	2705	82	< 0.1
5	1150	110 cc/min	2705	92	< 0.1
6	1200	110 cc/min	2705	82	< 0.1
7					
8					
9					
10					
11					
12					
Total	60		0.0		
Average		110 cc/min		84 (544R)	<0.1 (30.04)

BONNER ANALYTICAL TESTING COMPANY
RT. 14, BOX 509
HATTIESBURG, MS 39402
(601) 264-2854

BYRON METHOD 25 Lab Data Sheet

FACILITY Hercules, Inc.

LOCATION 190 PolyRad RUN # 2

Bag I.D. 002
Vplume Collected 6.600 Volume Analyzed 6.600
if changed, why

Trap I.D. 002
Volume Collected 6.600 Burnout Volume 6.500

BAG ANALYSIS

Date 6/05/88 Analyst MSB

				Average
NMHC	29049	29554	29592	29398
CO	33433	33871	32977	33427
CO_2	3773	3804	3801	3793
CH_4	6113	6019	6223	6118

TRAP ANALYSIS

Date 5/30/88 Temperature 300 C Analyst JP

				Average
NMHC	<3	<3	<3	<3
CO	<3	<3	<3	<3
CO_2	195	203	195	198
CH_4	<3	<3	<3	<3

General Comments

VOC = volatile organic carbon - This is the sum of the VOC collected in the trap plus any VOC that passes through the trap into the bag. In the analysis the bag portion is the BAG NMHC (nonmethane hydrocarbon); the trap is burned out and all the VOC converted to carbon dioxide prior to analysis thus the trap portion is the TRAP CO_2.

$$VOC_+ \text{ lb/hr} = \frac{(\text{VOC BAG}_{ave} + \text{VOC TRAP}_{ave})\ \text{SCFH}}{32 \times 10^6}$$

$$VOC_+ \text{ lb/hr} = \frac{(29398 \text{ bag} + 198 \text{ trap})\ 0 \text{ Discharge SCFH}}{32 \times 10^6}$$

VOC_+ = 29596 PPM

BONNER ANALYTICAL TESTING COMPANY
RT. 14, BOX 509
HATTIESBURG, MS 39401
(601) 264-2554

Facility Hercules, Inc.

Location 190 PolyRad

Run # 2

1. Standard Cubic Feet Per Run (Vms)

$$Vms = 17.647 \times Ym \ (Vmf - Vmi) \ \frac{(Pb + \frac{\Delta Pm}{13.6})}{Tm}$$

Vms = 0 Discharge

= 0 Discharge

2. Standard Cubic Feet Per Hour (SCFH)

$$SCFH = \frac{Vms}{HR} = \text{0 Discharge}$$

3. Gas Flow Rate

$$Qs = \frac{Vms}{\theta}$$

BONNER ANALYTICAL TESTING COMPANY
RT. 14, BOX 509
HATTIESBURG, MS 39402
(601) 264-2854

EPA METHOD 25

VOLATILE ORGANIC CARBON

Facility Hercules, Inc. - Hattiesburg, MS

Location 190 - Polyrad

Date 5/26/88 Operators JS/JP/MSS

Run # 3
Bag # 003
Trap # 003

Barometric Press (in Hg) 30.04

Ambient Temp. (F) 83

Wet Bulb 68
Dry Bulb 82
% Moisture <1

Sample Train Leak Rate (<1 cc/min) <1

Pretest Vacuum 30 in H_2O 0.35 in/min Leakrate (<1.6 in/min)

Post Test Vacuum 30 in H_2O 0.35 in/min Leakrate (<1.6 in/min)

DRY GAS METER

Meter # 75021

Meter Coef: 0.990

Date Calibrated 5/19/88

	Time	Mass Flow	Source Volumetric Flow Data:		
	Clock/Sample	Meter Reading	Cubic feet	Dry Gas Meter Temp (F)	Static Press (in H_2O)
I	1215	110 cc/min	2705	82	< 0.1
1	1225	110 cc/min	2705	82	< 0.1
2	1235	110 cc/min	2705	83	< 0.1
3	1245	110 cc/min	2705	83	< 0.1
4	1255	110 cc/min	2705	84	< 0.1
5	1305	110 cc/min	2705	84	< 0.1
6	1315	110 cc/min	2705	84	< 0.1
7					
8					
9					
10					
11					
12					
Total	60		0.0		
Average		110 cc/min		83 (543R)	<0.1 (30.04)

BONNER ANALYTICAL TESTING COMPANY
RT. 14, BOX 509
HATTIESBURG, MS 39402
(601) 264-2854

BYRON METHOD 25 Lab Data Sheet

FACILITY Hercules, Inc.

LOCATION 190 PolyRad RUN # 3

Bag I.D. 003
Volume Collected 6.600 Volume Analyzed 6.600
if changed, why

Trap I.D. 003
Volume Collected 6.600 Burnout Volume 6.500

BAG ANALYSIS

Date 5/29/88 Analyst MSB/JP

				Average
NMHC	5810	5875	5784	5823
CO	36570	35990	36250	36270
CO_2	3985	3915	3922	3941
CH_4	5455	5491	5493	5480

TRAP ANALYSIS

Date 5/29/88 Temperature 300 C Analyst MSB

				Average
NMHC	<3	<3	<3	<3
CO	<3	<3	<3	<3
CO_2	17359	17705	17011	17359
CH_4	<3	<3	<3	<3

General Comments

VOC = volatile organic carbon -- This is the sum of the VOC collected in the trap plus any VOC that passes through the trap into the bag. In the analysis the bag portion is the BAG NMHC (nonmethane hydrocarbon); the trap is purged out and all the VOC converted to carbon dioxide prior to analysis thus the trap portion is the TRAP CO_2.

$$VOC_+ \text{ lb/hr} = \frac{(VOC\ BAG_{ave} + VOC\ TRAP_{ave})\ SCFH}{32 \times 10^6}$$

$$VOC_+ \text{ lb/hr} = \frac{(5823 \text{ bag} + 17359 \text{ trap})\ 0 \text{ Discharge SCFH}}{32 \times 10^6}$$

$$VOC_+ = \boxed{23182 \quad PPM}$$

BONNER ANALYTICAL TESTING COMPANY
RT. 14, BOX 509
HATTIESBURG, MS 39401
(601) 264-2854

Facility Hercules, Inc.

Location 190 PolyRad

Run # 3

1. Standard Cubic Feet Per Run (Vms)

$$Vms = 17.647 \times Ym \ (Vmf - Vmi) \ \frac{(Pa + \frac{\Delta Pm}{13.6})}{Tm}$$

Vms = 0 Discharge

= 0 Discharge

2. Standard Cubic Feet Per Hour (SCFH)

$$SCFH = \frac{Vms}{HR} = \text{0 Discharge}$$

3. Gas Flow Rate

$$Qs = \frac{Vms}{\theta}$$

Method 18 - GC

Facility: Hercules, Inc.

Location: 190 PolyRad

Analyte: Ethylene Oxide

1. Nanograms of standard injected @ STP (NG$_{STD}$)

$$NG_{(STD)} = NGobs \times \frac{(29.92 \times Tobs)^{0.5}}{Pbar \times 528}$$

STD1 = 50 X 1.008 = 50.4

STD2 = 200 X 1.008 = 201.6

STD3 = 1000 X 1.008 = 1008

2. Concentration of Analyte mg/m³ @ STP C_{STD}

$$C_{STD} = \frac{AA \times 1 \times 10^{-3}}{Rf_{STD} \times Vi \times \frac{(29.92 \times Tobs)^{0.5}}{Pbar \times 528}}$$

Run 1 = $\frac{11.839 \times 1 \times 10^{-3}}{0.106 \times 1 \times 10^{-5} \times 1.008}$ = 11,080

Run 2 = $\frac{16.532 \times 1 \times 10^{-3}}{0.106 \times 1 \times 10^{-5} \times 1.008}$ = 15,472

Run 3 = $\frac{11.076 \times 1 \times 10^{-3}}{0.106 \times 1 \times 10^{-5} \times 1.008}$ = 10,366

3. Parts per million of Analyte @ STP (PPM)

$$PPM = C_{STD} \times \frac{24.05}{MW}$$

Run 1 11080 X $\frac{24.05}{44}$ = 6,056

Run 2 15472 X $\frac{24.05}{44}$ = 8,457

Run 3 10366 X $\frac{24.05}{44}$ = 5,666

4. Mass Loading of Analyte (STP) lb/hr (M_{STD})

$$M_{STD} = \frac{C_{STD} \times SCFH}{1.6019 \times 10^{7}}$$

Run 1 = $\frac{X}{1.6019 \times 10^{7}}$ = NA

Run 2 = $\frac{X}{1.6019 \times 10^{7}}$ = NA

Run 3 = $\frac{X}{1.6019 \times 10^{7}}$ = NA

FIELD DATA SHEET VOLATILE HYDROCARBONS

Facility: Hercules, Inc.

Location: 190 PolyRad

Date: 5/26/88 Operators JS/MSB/JP

Analyte: Ethylene Oxide

	Run 1	Run 2	Run 3
Sample Temp (F	81	82	82
Barometric press (in Hg)	30.04	30.04	30.04
Ambient Temperature (F)	78	80	83
Sample flow rate cc/min	100	100	100
Bag ID	190/1	190/2	190/3
Start Time	0950	1100	1215
End Time	1050	1200	1315

Facility: Hercules, Inc. Method 8+GC

Location: 190 PolyRad Sample Type Bag

Date: 6/3/88

Analyte: Ethylene Oxide Operator: MSB/DM

Calibration Data: GC - GC/MS

	STANDARD	Amt (ng) STD	AREA			Ave Area	Ave Area/ng
1.	50	50.4	5.441	5.312	5.274	5.342	0.106
2.	100	201.6	20.711	20.945	20.639	20.765	0.103
3.	1000	1008	109.655	110.001	109.960	109.872	0.109

Rf (STD) = 0.106

Sample	Area	Samp Vol. (L)	mg/m³ (STD)	PPM (STD)	lb/hr (STD)
Run 1A	11.810				
1B	11.905				
1C	11.802				
Ave(AA)	11.839	1 X 10-5	11080	6056	NA
2A	16.420				
2B	16.720				
2C	16.457				
Ave(AA)	16.532	1 X 10-5	15472	8457	NA
3A	11.541				
3B	10.923				
3C	10.766				
Ave(AA)	11.076	1 X 10-5	10366	5666	NA

BONNER ANALYTICAL TESTING COMPANY
RT. 14, BOX 509
HATTIESBURG, MS 39402
(601) 264-2854

EPA METHOD 25

VOLATILE ORGANIC CARBON

Facility Hercules Inc H'burg

Location 190 Polyrad

Date 5/26/88 Operators MSB/JS/DP

Run # 1
Bag # 001
Trap # 001

Barometric Press (in Hg) 30.04

Ambient Temp. (F) 78

Wet Bulb 91
Dry Bulb 81
% Moisture <1

Sample Train Leak Rate ((1 cc/min) <1

Pretest Vacuum 30 in H_2O 0.35 in/m Leakrate ((1.6 in/min)

Post Test Vacuum 30 in H_2O 0.35/in/m. Leakrate ((1.6 in/min)

Bag Sample

DRY GAS METER

Meter # 75021

Meter Coef: 0.990

Date Calibrated 5/19/88

	Time Clock/Sample	Mass Flow Meter Reading	Source Volumetric Flow Data: Cubic feet	Dry Gas Meter Temp(F)	Static Press (in H_2O)
I	0950	110	2705	81	<0.1
1	1000	110	2705	81	<0.1
2	1010	88	2709	81	<0.1
3	1020	114	2705	85	<0.1
4	1030	112	2705	87	<0.1
5	1040	110	2705	87	<0.1
6	1050	110	2705	88	<0.1
7	~~1100~~				
8					
9					
10					
11					
12					
Total	60		0.0		
Average		108 cc/min		84 (544R)	<0.1 (30.04)

BONNER ANALYTICAL TESTING COMPANY
RT. 14, BOX 509
HATTIESBURG, MS 39402
(601) 264-2854

BYRON METHOD 25 Lab Data Sheet

FACILITY Hercules Inc

LOCATION 190 Polk Road RUN 1

Bag I.D. 001
Volume Collected 6486 Volume Analyzed 6480
if changed, why

Trap I.D. 001
Volume Collected 6.480 Burnout Volume 6.500

BAG ANALYSIS Date 6/5/88 Analyst MSB

				Average
NMHC	21823	21522	21576	21640
CO	24661	24611	24002	24424
CO_2	3409	3365	3369	3381
CH_4	5669	5602	5979	5750

TRAP ANALYSIS

Date _____ Temperature _____ Analyst _____

				Average
NMHC	<3	<3	<3	<3
CO	21	22	22	22
CO_2	1342	1305	1344	1331
CH_4	<3	<3	<3	<3

General Comments

VOC = volatile organic carbon - This is the sum of the VOC collected in the trap plus any VOC that passes through the trap into the bag. In the analysis the bag portion is the BAG NMHC (nonmethane hydrocarbon); the trap is burned out and all the VOC converted to carbon dioxide prior to analysis thus the trap portion is the TRAP CO_2.

$$VOC_t \text{ lb/hr} = \frac{(VOC\ BAG_{ave} + VOC\ TRAP_{ave})\ SCFH}{32 \times 10^6}$$

$$VOC_t \text{ lb/hr} = \frac{(21640_{bag} + 1331_{trap})\ \text{Zero Discharge SCFH}}{32 \times 10^6}$$

VOC_t = 22971 PPM

BONNER ANALYTICAL TESTING COMPANY
RT. 14, BOX 509
HATTIESBURG, MS 39401
(601) 264-2854

Facility Hercules

Location 190 Polyrad

Run 1

1. Standard Cubic Feet Per Run (Vms)

$$Vms = 17.647 \times Ym \, (Vmf - Vmi) \, \frac{(Pb + \frac{DPm}{13.6})}{Tm}$$

Vms = Zero Discharge

=

2. Standard Cubic Feet Per Hour (SCFH)

$$SCFH = \frac{Vms}{HR}$$ Zero Discharge

3. Gas Flow Rate

$$Qs = \frac{Vms}{J}$$

BONNER ANALYTICAL TESTING COMPANY
RT. 14, BOX 509
HATTIESBURG, MS 39402
(601) 264-2854

EPA METHOD 25

VOLATILE ORGANIC CARBON

Facility Hercules Inc

Location 190 Polyrad

Date 5/26/88 Operators JS/MSB/CT

Run # 2
Bag # 002
Trap # 002

Barometric Press (in Hg) 30.04

Ambient Temp. (F) 80

Wet Bulb 70
Dry Bulb 82
% Moisture 21

Sample Train Leak Rate (<1 cc/min) <1

Pretest Vacuum 30 in H_2O 0.30 in/min Leakrate (<1.6 in/min)

Post Test Vacuum 30 in H_2O 0.30 in/min Leakrate (<1.6 in/min)

DRY GAS METER

Meter # 78021

Meter Coef: 0.990

Date Calibrated 5/19/88

	Time Clock/Sample	Mass Flow Meter Reading	Source Volumetric Flow Data: Cubic feet	Dry Gas Meter Temp(F)	Static Press (in H_2O)
I	1100	110	2705	88	
1	~~1104~~ 1100	110	2705	88	
2	1120	110	2705	84	
3	~~13~~ 1130	110	2705	84	
4	1140	110	2705	82	
5	1150	110	2705	82	
6	1200	110	2709	82	
7					
8					
9					
10					
11					
12					
Total			Zero Discharge		
Average		110 cc/min		84 (544R)	30.04
		6.600			

BONNER ANALYTICAL TESTING COMPANY
RT. 14, BOX 509
HATTIESBURG, MS 39402
(601) 264-2854

BYRON METHOD 25 Lab Data Sheet

FACILITY ~~Horsehead~~ Inc

LOCATION 190 Polyrad RUN 2

Bag I.D. 002
Volume Collected 6.600 Volume Analyzed 6.600
if changed, why

Trap I.D. 002
Volume Collected 6.600 Burnout Volume 6.600

BAG ANALYSIS

Date 6/5/88 Analyst MSB

				Average
NMHC	29049	29554	29592	29398
CO	33433	33871	33777	33427
CO_2	3773	3804	3801	3793
CH_4	6113	6019	6223	6118

TRAP ANALYSIS

Date 5/30/88 Temperature 800 Analyst MSB/JP

				Average
NMHC	<3	<3	<3	<3
CO	<3	<3	<3	<3
CO_2	195	203	195	198
CH_4	<3	<3	<3	<3

General Comments

VOC = volatile organic carbon - This is the sum of the VOC collected in the trap plus any VOC that passes through the trap into the bag. In the analysis the bag portion is the BAG NMHC (nonmethane hydrocarbon); the trap is burned out and all the VOC converted to carbon dioxide pnior to analysis thus the trap portion is the TRAP CO_2.

$$VOC_t \text{ lb/hr} = \frac{(VOC\ BAG_{ave} + VOC\ TRAP_{ave})\ SCFH}{32 \times 10^6}$$

$$VOC_t \text{ lb/hr} = \frac{(29398 \text{ bag} + 198 \text{ trap})\ \text{Zero Discharge SCFH}}{32 \times 10^6}$$

VOC_t = 29596 PPM

BONNER ANALYTICAL TESTING COMPANY
RT. 14, BOX 509
HATTIESBURG, MS 39401
(601) 264-2854

Facility Hercules

Location 190 - PolyRad

Run #3 (2)

1. Standard Cubic Feet Per Run (Vms)

$$Vms = 17.647 \times Ym \ (Vmf - Vmi) \ \frac{(Pb + \frac{DPm}{13.6})}{Tm}$$

Vms = Zero Discharge

=

2. Standard Cubic Feet Per Hour (SCFH)

$$SCFH = \frac{Vms}{HR}$$ Zero Discharge

3. Gas Flow Rate

$$Qs = \frac{Vms}{J}$$

RT. 14, BOX 509
HATTIESBURG, MS 39402
(601) 264-2854

EPA METHOD 25

VOLATILE ORGANIC CARBON

Facility Hercules Inc

Location 190 - Polyrad

Date 5/26/88 Operators JS/MB/BP

Run # 3
Bag # 003
Trap # 003

Barometric Press (in Hg) 30.04

Ambient Temp. (F) 83

Wet Bulb 68
Dry Bulb 82
% Moisture <1

Sample Train Leak Rate (<1 cc/min) <1

Pretest Vacuum 30 in H_2O 0.35 in/min Leakrate (<1.6 in/min)

Post Test Vacuum 30 in H_2O 0.35 in/min Leakrate (<1.6 in/min)

DRY GAS METER

Meter # 75021

Meter Coef: 0.990

Date Calibrated 5/19/88

	Time	Mass Flow	Source Volumetric Flow Data		
	Clock/Sample	Meter Reading	Cubic feet	Dry Gas Meter Temp(F)	Static Press (in H_2O)
I	1215	110	2705	82	<.1
1	1225	110	2705	82	<1
2	1235	110	2705	83	<1
3	1245	110	2705	83	<1
4	1255	110	2705	84	<.1
5	1305	110	2705	84	<1
6	1315	110	2705	84	<1
7					
8					
9					
10					
11					
12					
Total					
Average		110 / 6.600	Zero Discharge	83 (548R)	<1 30.04

BONNER ANALYTICAL TESTING COMPANY
RT. 14, BOX 509
HATTIESBURG, MS 39402
(601) 264-2854

BYRON METHOD 25 Lab Data Sheet

FACILITY Hercules

LOCATION 190 Polyrad RUN 3

Bag I.D. 003
Volume Collected 6.600 Volume Analyzed 6.600
if changed, why

Trap I.D. 003
Volume Collected 6.600 Burnout Volume 6.500

BAG ANALYSIS Date 5/29/88 Analyst JP/MSB

				Average
NMHC	5810.	5875	5784	5823
CO	36570	35990	36250	36270
CO_2	3985	3915	3922	3941
CH_4	5455	5491	5493	5480

TRAP ANALYSIS Date 5/29/88 Temperature 300°c Analyst MSB

				Average
NMHC	<3	<3	<3	<3
CO	<3	<3	<3	<3
CO_2	17359	17705	17011	17359
CH_4	<3	<3	<3	<3

General Comments

VOC = volatile organic carbon - This is the sum of the VOC collected in the trap plus any VOC that passes through the trap into the bag. In the analysis the bag portion is the BAG NMHC (nonmethane hydrocarbon); the trap is burned out and all the VOC converted to carbon dioxide prior to analysis thus the trap portion is the TRAP CO_2.

$$VOC_t \text{ lb/hr} = \frac{(VOC\ BAG_{ave} + VOC\ TRAP_{ave})\ SCFH}{32 \times 10^6}$$

$$VOC_t \text{ lb/hr} = \frac{(5823 \text{ bag} + 17359 \text{ trap})\ \text{Zero Discharge SCFH}}{32 \times 10^6}$$

VOC_t = 23182 PPM

BONNER ANALYTICAL TESTING COMPANY
RT. 14, BOX 509
HATTIESBURG, MS 39401
(601) 264-2854

Facility Hercules

Location 190 Polyrad

Run 3

1. Standard Cubic Feet Per Run (Vms)

$$Vms = 17.647 \times Ym \, (Vmf - Vmi) \, \frac{(Pb + \frac{DPm}{13.6})}{Tm}$$

Vms = Zero Discharge

=

2. Standard Cubic Feet Per Hour (SCFH)

$$SCFH = \frac{Vms}{HR}$$ Zero Discharge.

3. Gas Flow Rate

$$Qs = \frac{Vms}{J}$$

Facility: Hercules Inc

Location: 190 Polyrad

Analyte: Ethylene oxide

Method 18-GC

1. Nanograms of standard injected @ STP (NGSTD)

$$NG(STD) = NGobs \times \frac{(29.92 \times Tobs)^{0.5}}{Pbar \times 528}$$

STD1 = 50 x 1.008 = 50.4

STD2 = 200 x 1.008 = 201.6

STD3 = 1000 x 1.008 = 1008

2. Concentration of Analyte mg/m³ @ STP CSTD

$$CSTD = \frac{AA \times 1 \times 10^{-3}}{RfSTD \times Vi \times \frac{(29.92 \times Tobs)^{0.5}}{Pbar \times 528}}$$

Run 1 = $\frac{11.839}{0.106} \times 1 \times 10^{-3} \times 1*10^{-5} \times 1.008$ = 11,080

Run 2 = $\frac{16.532}{0.106} \times 1 \times 10^{-3} \times 1*10^{5} \times 1.008$ = 15,472

Run 3 = $\frac{11.076}{0.106} \times 1 \times 10^{-3} \times 1*10^{-5} \times 1.008$ = 10,366

3. Parts per million of Analyte @ STP (PPM)

$$PPM = CSTD \times \frac{24.05}{MW}$$

Run 1 11080 x $\frac{24.05}{44}$ = 6,056

Run 2 15472 x $\frac{24.05}{44}$ = 8,457

Run 3 10366 x $\frac{24.05}{44}$ = 5,666

4. Mass Loading of Analyte (STP) lb/hr (MSTD)

$$MSTD = \frac{CSTD \times SCFH}{1.6019 \times 107}$$

Run 1 = $\frac{X}{1.6019 \times 107}$ = NA

Run 2 = $\frac{X}{1.6019 \times 107}$ = NA

Run 3 = $\frac{X}{1.6019 \times 107}$ = NA

FIELD DATA SHEET VOLATILE HYDROCARBONS

Facility: Hercules Inc

Location: 190 Polyrad

Date: 5/26/88 Operators JS/MSB/JB

Analyte: Ethylene Oxide

	Run 1	Run 2	Run 3
Sample Temp (F	81	82	82
Barometric press (in Hg)	30.04	30.04	30.04
Ambient Temperature (F)	78	80	83
Sample flow rate cc/min	100	100	100
Bag ID	190/1	190/2	190/3
Start Time	0950	1100	1215
End Time	1050	1200	1315

Facility: Hercules Inc Method LB-GC

Location: 190 Polly Rd Sample Type Bag

Date: 6/3/88

Analyte: Ethylene Oxide Operator: MSB/DM

Calibration Data: GC - GC/MS

	STANDARD	Amt (ng) STD	AREA			Ave Area	Ave Area/ng
1.	50	50.4	5.441	5.312	5.274	5.342	0.106
2.	100	201.6	20.911	20.945	20.638	20.765	0.103
3.	1000	1008	109.655	110.001	109.960	109.872	0.109

Rf (STD) = 0.106

Sample	Area	Samp Vol. (L)	mg/m³ (STD)	PPM (STD)	lb/hr (STD)
Run 1A	11.810				
1B	11.905				
1C	11.802				
Ave (AA)	11.839	$1*10^{-5}$	11080	6056	NA
2A	16.420				
2B	16.720				
2C	16.457				
Ave (AA)	16.532	$1*10^{-5}$	15472	8457	NA
3A	11.541				
3B	10.923				
3C	10.766				
Ave (AA)	11.076	$1*10^{-5}$	10366	5666	

MISSISSIPPI DEPARTMENT OF NATURAL RESOURCES
Bureau of Pollution Control
P.O. Box 10385
Jackson, Mississippi 39289-0385
(601) 961-5171

MEMORANDUM

TO: File

FROM: Jesse Thompson, Jr.

SUBJECT: Stack Test Review

DATE: June 8, 1989

Facility No. 110-0800-00001-230

The data submitted for the Carbon Regeneration Furnace scrubber has been reviewed. EPA Method 25 was used to sample the emission point for VOC's. The review did not reveal any problems. I recommend that the test be accepted.

JT:cm

BONNER ANALYTICAL TESTING COMPANY
RT. 14, BOX 509
HATTIESBURG, MS 39402
(601) 264-2854

EPA METHOD 25

VOLATILE ORGANIC CARBON

Facility Hercules, Inc.

Location 230 - Carbon Regenerator Furnace Scrubber (CRFS)

Date 5/19/88 Operators JS/JP

Run # 1
Bag # 017
Trap # 017

Barometric Press (in Hg) 30.01

Ambient Temp. (F) _____

Wet Bulb 138
Dry Bulb 144
% Moisture <1

Sample Train Leak Rate (<1 cc/min) <1

Pretest Vacuum 30 in H_2O 0.30 in/min Leakrate (<1.6 in/min)

Post Test Vacuum 30 in H_2O 0.50 in/min Leakrate (<1.6 in/min)

DRY GAS METER

Meter # NA

Meter Coef: NA

Date Calibrated NA

	Time	Mass Flow	Source Volumetric Flow Data		
	Clock/Sample	Meter Reading	Cubic feet	Dry Gas Meter Temp (F)	Static Press (in H_2O)
I	0920	100 cc/min			
1	0930	100 cc/min			
2	0940	105 cc/min			
3	0950	105 cc/min	SEE PITOT TRAVERSE		
4	1000	95 cc/min			
5	1010	95 cc/min			
6	1020	100 cc/min			
7					
8					
9					
10					
11					
12					
Total		700 cc/min			
Average		100 cc/min (6.000)			

BONNER ANALYTICAL TESTING COMPANY
RT. 14, BOX 509
HATTIESBURG, MS 39402
(601) 264-2854

BYRON METHOD 25 Lab Data Sheet

FACILITY Hercules, Inc.

LOCATION 230 - CRFS RUN #1

Bag I.D. 017
Volume Collected 6.000 Volume Analyzed 6.000
If changed, why

Trap I.D. 017
Volume Collected 6.000 Burrout Volume 5.000

BAG ANALYSIS

Date 5/30/88 Analyst JP/MSB

				Average
NMHC	<3	<3	<3	<3
CO	45	45	45	45
CO_2	607	597	596	600
CH_4	<3	<3	<3	<3

TRAP ANALYSIS

Date 5/25/88 Temperature 300 C Analyst MSB

				Average
NMHC	<3	<3	<3	<3
CO	28.5	28	28	28
CO_2	4262	4212	4353	4276
CH_4	<3	<3	<3	<3

General Comments

VOC = volatile organic carbon - This is the sum of the VOC collected in the trap plus any VOC that passes through the trap into the bag. In the analysis the bag portion is the BAG NMHC (nonmethane hydrocarbon); the trap is burned out and all the VOC converted to carbon dioxide prior to analysis thus the trap portion is the TRAP CO_2.

$$VOC_+ \text{ lb/hr} = \frac{(VOC\ BAG_{ave} + VOC\ TRAP_{ave})\ SCFH}{32 \times 10^6}$$

$$VOC_+ \text{ lb/hr} = \frac{(\text{<3 bag} + \text{4276 trap})\ 101962\ SCFH}{32 \times 10^6}$$

VOC_+ = 13.62 lb/hr.

BONNER ANALYTICAL TESTING COMPANY
RT. 14, BOX 509
HATTIESBURG, MS 39402
(601) 264-2854

Facility Hercules, Inc. Location 230 - CRFS

Date 5/19/88 Run Number 1

Stack Diameter or Dimensions, m(in.) 16

Barometric Pressure (in. Hg) 30.01 Ambient Temp (F)

Cross Sectional Area, (ft_2) 1.046 Operators JS/MSB

Pitot Tube I.D. Number 001

Avg. Coefficient, Cp = 1.00
Last Date Calibrated 5/19/88

SCHEMATIC OF STACK CROSS SECTION

Traverse Pt.No.	Vel. Hd., Δp (in.) H_2O	Stack Temperature t_s (C)	P_s (in.Hg)	Δp o.s
1	0.16	62		
2	0.17	62		
3	0.18	63		
4	0.22	62		
5	0.22	62		
6	0.22	62		
7	0.18	63		
8	0.16	62		
1	0.18	62		
2	0.22	62		
3	0.22	62		
4	0.18	63		
5	0.17	63		
6	0.22	62		
7	0.20	62		
8	0.18	62 = 144 F		
Average	0.1925	144 F (604 R)	30.01	0.438

BONNER ANALYTICAL TESTING COMPANY
RT. 14, BOX 509
HATTIESBURG, MS 39402
(601) 264-2854

EPA METHOD 25

VOLATILE ORGANIC CARBON

Facility Hercules, Inc.

Location 230 - Carbon Regenerator Furnace Scrubber (CRFS)

Date 5/19/88 Operators JS/MSB

Run # 2
Bag # 020
Trap # 020

Barometric Press (in Hg) 30.01

Ambient Temp. (F) _____

Wet Bulb 138
Dry Bulb 144
% Moisture <1

Sample Train Leak Rate (<1 cc/min) <1

Pretest Vacuum 30 in H_2O 0.30 in/min Leakrate (<1.6 in/min)

Post Test Vacuum 30 in H_2 0.30 in/min Leakrate (<1.6 in/min)

DRY GAS METER

Meter # NA

Meter Coef: NA

Date Calibrated NA

	Time	Mass Flow	Source Volumetric Flow Data		
	Clock/Sample	Meter Reading	Cubic feet	Dry Gas Meter Temp (F)	Static Press (in H_2O)
I	1025	100 cc/min			
1	1035	95 cc/min			
2	1045	95 cc/min			
3	1055	105 cc/min	SEE PITOT TRAVERSE		
4	1105	105 cc/min			
5	1115	100 cc/min			
6	1125	100 cc/min			
7					
8					
9					
10					
11					
12					
Total	60				
Average		100 cc/min (6.000)			

BONNER ANALYTICAL TESTING COMPANY
RT. 14, BOX 509
HATTIESBURG, MS 39402
(601) 264-2854

BYRON METHOD 25 Lab Data Sheet

FACILITY Hercules, Inc.

LOCATION 230 - CRFS RUN #2

Bag I.D. 020
Volume Collected 6.000 volume Analyzed 6.000
if changed, why

Trap I.D. 020
Volume Collected 6.000 Burnout Volume 6.000

BAG ANALYSIS

Date 5/30/88 Analyst JP/MSB

				Average
NMHC	287	293	293	291
CO	297	290	289	292
CO_2	35067	34856	34970	34964
CH_4	22	22	22	22

TRAP ANALYSIS

Date 5/25/88 Temperature 300 C Analyst JP

				Average
NMHC	<3	<3	<3	<3
CO	14	14	13	14
CO_2	732	732	725	730
CH_4	<3	<3	<3	<3

General Comments

VOC = volatile organic carbon - This is the sum of the VOC collected in the trap plus any VOC that passes through the trap into the bag. In the analysis the bag portion is the BAG NMHC (nonmethane hydrocarbon); the trap is burned out and all the VOC converted to carbon dioxide prior to analysis thus the trap portion is the TRAP CO_2.

$$VOC_+ \text{ lb/hr} = \frac{(VOC\ BAG_{ave} + VOC\ TRAP_{ave})\ SCFH}{32 \times 10^6}$$

$$VOC_+ \text{ lb/hr} = \frac{(291 \text{ bag} + 732 \text{ trap})\ 1.01499\ SCFH}{32 \times 10^6}$$

VOC_+ = 3.24 lb/hr.

BONNER ANALYTICAL TESTING COMPANY
RT. 14, BOX 509
HATTIESBURG, MS 39402
(601) 264-2854

Facility Hercules, Inc. Location 230 - DRFS

Date 5/19/88 Run Number 2

Stack Diameter or Dimensions, m.(in.) 16"

Barometric Pressure (in. Hg) 30.01 Ambient Temp (F)

Cross Sectional Area, (ft_p) 1.046' Operators JS

Pitot Tube I.D. Number 001

Avg. Coefficient, Cp = 1.00
Last Date Calibrated 5/18/88

SCHEMATIC OF STACK CROSS SECTION

Traverse Pt.No.	Vel. Hd., Δp (in.) H_2O	Stack Temperature t_s (C)	P_s (in.Hg)	Δp o.s
1	0.17	62		
2	0.17	62		
3	0.18	62		
4	0.22	62		
5	0.22	62		
6	0.21	62		
7	0.20	62		
8	0.18	62		
1	0.18	62		
2	0.17	62		
3	0.21	61		
4	0.20	62		
5	0.21	62		
6	0.17	62		
7	0.17	62		
8	0.18	62 = 144 F		
Average	0.190	144 F (604 R)	30.01	0.436

BONNER ANALYTICAL TESTING COMPANY
RT. 14, BOX 509
HATTIESBURG, MS 39402
(601) 264-2854

EPA METHOD 25

VOLATILE ORGANIC CARBON

Facility Hercules, Inc.

Location 230 - Carbon Regenerator Furnace Scrubber (CRFS)

Date 5/19/88 Operators JS/MSR

Run # 3
Bag # 021
Trap # 021

Barometric Press (in Hg) 30.01

Ambient Temp. (F) _____

Wet Bulb 138
Dry Bulb 144
% Moisture <1

Sample Train Leak Rate (<1 cc/min) <1

Pretest Vacuum 30 in H_2O 0.30 in/min Leakrate (<1.6 in/min)

Post Test Vacuum 30 in H_2O 0.35 in/min Leakrate (<1.6 in/min)

DRY GAS METER

Meter # NA

Meter Coef: NA

Date Calibrated NA

	Time	Mass Flow	Source Volumetric Flow Data		
	Clock/Sample	Meter Reading	Cubic feet	Dry Gas Meter Temp (F)	Static Press (in H_2O)
I	1135	100 cc/min			
1	1145	100 cc/min			
2	1155	100 cc/min			
3	1205	100 cc/min	SEE PITOT TRAVERSE		
4	1215	100 cc/min			
5	1225	100 cc/min			
6	1235	100 cc/min			
7					
8					
9					
10					
11					
12					
Total	60				
Average		100 cc/min			

BONNER ANALYTICAL TESTING COMPANY
RT. 14, BOX 509
HATTIESBURG, MS 39402
(601) 264-2854

BYRON METHOD 25 Lab Data Sheet

FACILITY Hercules, Inc.

LOCATION 230 - CRFS RUN #3

Bag I.D. 021
Volume Collected 6.000 Volume Analyzed 6.000
if changed, why

Trap I.D. 021
Volume Collected 6.000 Purge Volume 6.000

BAG ANALYSIS

Date 5/30/88 Analyst JP/MSB

				Average
NMHC	599	604	604	602
CO	279	279	281	280
CO_2	34010	34510	34605	34375
CH_4	22	23	23	23

TRAP ANALYSIS

Date 5/25/88 Temperature 300 C Analyst JP/MSB

				Average
NMHC	<3	<3	<3	<3
CO	22	22	23	22
CO_2	971	991	989	984
CH_4	<3	<3	<3	<3

General Comments

VOC = volatile organic carbon - This is the sum of the VOC collected in the trap plus any VOC that passes through the trap into the bag. In the analysis the bag portion is the BAG NMHC (nonmethane hydrocarbon); the trap is burned out and all the VOC converted to carbon dioxide prior to analysis thus the trap portion is the TRAP CO_2.

$$VOC_+ \text{ lb/hr} = \frac{(VOC\ BAG_{ave} + VOC\ TRAP_{ave})\ SCFH}{32 \times 10^6}$$

$$VOC_+ \text{ lb/hr} = \frac{(602 \text{ bag} + 984 \text{ trap})\ 103826\ SCFH}{32 \times 10^6}$$

VOC_+ = 5.15 lb/hr.

BONNER ANALYTICAL TESTING COMPANY
RT. 14, BOX 509
HATTIESBURG, MS 39402
(601) 264-2854

Facility Hercules, Inc. Location 230 - CRFS

Date 5/19/88 Run Number 3

Stack Diameter or Dimensions, m(in.) 16"

Barometric Pressure (in. Hg) 30.01 Ambient Temp (F) ____

Cross Sectional Area, (ft_s) 1.046' Operators JS/WS3/JP

Pitot Tube I.D. Number 001

Avg. Coefficient, Cp = 1.00
Last Date Calibrated 5/18/88

SCHEMATIC OF STACK CROSS SECTION

Traverse Pt.No.	Vel. Hd., Δp (in.) H_2O	Stack Temperature t_s (C)	P_s (in.Hg)	Δp o.s
1	0.18	61		
2	0.18	61		
3	0.20	62		
4	0.22	62		
5	0.23	62		
6	0.21	63		
7	0.21	63		
8	0.17	62		
1	0.17	61		
2	0.16	62		
3	0.18	62		
4	0.20	62		
5	0.23	62		
6	0.23	62		
7	0.21	62		
8	0.20	62		
Average	0.199	144 F (604 R)	30.01	0.446

Facility Hercules, Inc.

Location 230 - CRFS

Stack Gas Velocity (vs) avg. sec.

$$(Vs)\ avg. = KpCp\ (\Delta P)^{0.5}\ \frac{((Ts)\ avg.)^{0.5}}{PsMs}$$

Run

1. $$= (85.49)(1.0)(0.438)\left(\frac{604}{30.01 \times 29}\right)^{0.5}$$

$$= \boxed{31.194}$$

2. $$= (85.49)(1.0)(0.436)\left(\frac{604}{30.01 \times 29}\right)^{0.5}$$

$$= \boxed{31.052}$$

3. $$= (85.49)(1.0)(0.446)\left(\frac{604}{30.01 \times 29}\right)^{0.5}$$

$$= \boxed{31.764}$$

Stack Gas Volumetric Flow Rate (std. cond.) Qs $\frac{ft.^3}{hr.}$

$$3600\ (1-Bwo)\ VsA\ \frac{(Tstd.)}{(Ts)avg.}\ \frac{(Ps)}{Pstd.}$$

1. $$= (3600)(0.99)(31.194)(1.046)\left(\frac{528 \times 30.01}{604 \times 29.92}\right)$$

$$= \boxed{101,962}$$

2. $$= (3600)(0.99)(31.052)(1.046)\left(\frac{528 \times 30.01}{604 \times 29.92}\right)$$

$$= \boxed{101,499}$$

3. $$= (3600)(0.99)(31.764)(1.046)\left(\frac{528 \times 30.01}{604 \times 29.92}\right)$$

$$= \boxed{103,826}$$

BONNER ANALYTICAL TESTING COMPANY
RT. 14, BOX 509
HATTIESBURG, MS 39402
(601) 264-2854

EPA METHOD 25

VOLATILE ORGANIC CARBON

Facility Hercules Inc

Location 230

Date 5/19/88 Operators JS/DP

Run # 1
Bag # 017
Trap # 017

Barometric Press (in Hg) 30.01

Ambient Temp. (F) _____

Wet Bulb 138
Dry Bulb 144
% Moisture <1

Sample Train Leak Rate (<1 cc/min) <1

Pretest Vacuum 30 in H_2O 0.30 in/min Leakrate (<1.6 in/min)

Post Test Vacuum 30 in H_2O 0.30 in/min Leakrate (<1.6 in/min)

DRY GAS METER

Meter # NA

Meter Coef: _____

Date Calibrated _____

	Time	Mass Flow	Source Volumetric Flow Data		
	Clock/Sample	Meter Reading	Cubic feet	Dry Gas Meter Temp(F)	Static Press (in H_2O)
I	0920	100			
1	0930	100	SEE	Pitot	TRAVERSE
2	0940	105			
3	0950	105			
4	1000	95			
5	1010	95			
6	1020	100			
7					
8					
9					
10					
11					
12					
Total		700			
Average		100 cc/min			
		6.000			

BONNER ANALYTICAL TESTING COMPANY
RT. 14, BOX 509
HATTIESBURG, MS 39402
(601) 264-2854

BYRON METHOD 25 Lab Data Sheet

FACILITY Hercules Inc

LOCATION 230 (CRFS) RUN 1

Bag I.D. 017
Volume Collected 6.000 Volume Analyzed 6.000
if changed, why

Trap I.D. 017
Volume Collected 6.000 Burnout Volume ~~6.000~~ 5.000

BAG ANALYSIS Date 5/30/88 Analyst JP/MSB

				Average
NMHC	<3	<3	<3	<3
CO	45	45	45	45
CO_2	607	597	596	600
CH_4	<3	<3	<3	<3

TRAP ANALYSIS Date 5/25/88 Temperature 300 Analyst MSB

				Average
NMHC	<3	<3	<3	<3
CO	28.5	28	28	28
CO_2	4262	4212	4353	4276
CH_4	<3	<3	<3	<3

General Comments

VOC = volatile organic carbon -- This is the sum of the VOC collected in the trap plus any VOC that passes through the trap into the bag. In the analysis the bag portion is the BAG NMHC (nonmethane hydrocarbon); the trap is burned out and all the VOC converted to carbon dioxide prior to analysis thus the trap portion is the TRAP CO_2.

$$VOC_t \text{ lb/hr} = \frac{(VOC\ BAG_{ave} + VOC\ TRAP_{ave})\ SCFH}{32 \times 10^6}$$

$$VOC_t \text{ lb/hr} = \frac{(<3 \text{ bag} + 4276 \text{ trap})\ 101962\ SCFH}{32 \times 10^6}$$

VOC_t = 13.62

BONNER ANALYTICAL TESTING COMPANY
RT. 14, BOX 509
HATTIESBURG, MS 39402
(601) 264-2854

Facility Hercules Location 230

Date 5-19-88 Run Number 1

Stack Diameter or Dimensions, m(in.) 16

Barometric Pressure (in. Hg) 30.01 Ambient Temp (F) _____

Cross Sectional Area, (ft^2) 1.046' Operators JS/MSB

Pitot Tube I.D. Number 001

Avg. Coefficient, Cp = 1.00

Last Date Calibrated 5/18/88

SCHEMATIC OF STACK CROSS SECTION

Traverse Pt. No.	Vel. Hd., Dp (in.) H_2O	Stack Temperature t_s (F)	Pg (in. Hg)	Dp 0.5
		°C		
1	0.16	62		
2	0.17	62		
3	0.18	63		
4	0.22	62		
5	0.22	62		
6	0.22	62		
7	0.18	63		
8	0.16	62		
1	0.18	62		
2	0.22	62		
3	0.22	62		
4	0.18	63		
5	0.17	63		
6	0.22	62		
7	0.20	62		
8	0.18	62 = 144°F		
Average	0.1925	144°F (604°R)	30.01	0.438

BONNER ANALYTICAL TESTING COMPANY
RT. 14, BOX 509
HATTIESBURG, MS 39402
(601) 264-2854

EPA METHOD 25

VOLATILE ORGANIC CARBON

Facility Hercules

Location 230 - (CRFS)

Date 5/19/88 Operators JS/MAB

Run # 2
Bag # 020
Trap # 020

Barometric Press (in Hg) 30.01

Ambient Temp. (F) _____

Wet Bulb 138
Dry Bulb 144
% Moisture <1

Sample Train Leak Rate (<1 cc/min) <1

Pretest Vacuum 30 in H_2O 0.30 IN/min Leakrate (<1.6 in/min)

Post Test Vacuum 30 in H_2O 0.30 IN/min Leakrate (<1.6 in/min)

DRY GAS METER

Meter # NA

Meter Coef: _____

Date Calibrated _____

	Time Clock/Sample	Mass Flow Meter Reading	Source Volumetric Flow Data: Dry Gas Meter Cubic feet	Dry Gas Meter Temp(F)	Static Press (in H_2O)
I	1025	100 cc/min			
1	1035	95			
2	1045	95	See Rotof		
3	1055	105			
4	1105	105			
5	1115	100			
6	1125	100			
7					
8					
9					
10					
11					
12					
Total	100				
Average		100 cc/min			

BONNER ANALYTICAL TESTING COMPANY
RT. 14, BOX 509
HATTIESBURG, MS 39402
(601) 264-2854

BYRON METHOD 25 Lab Data Sheet

FACILITY Hercules

LOCATION 230 (CRFS) RUN 2

Bag I.D. 020
Volume Collected 6.000 Volume Analyzed 6.000
if changed, why

Trap I.D. 020
Volume Collected 6.000 Burnout Volume 6.000

BAG ANALYSIS Date 5/30/88 Analyst JP/msb

				Average
NMHC	287	293	293	291
CO	299	290	289	292
CO_2	35067	34856	34970	34964
CH_4	22	22	22	22

TRAP ANALYSIS Date 5/25/88 Temperature 300 Analyst JP

				Average
NMHC	<3	<3	<3	<3
CO	14	14	13	14
CO_2	732	732	725	730
CH_4	<3	<3	<3	<3

General Comments

VOC = volatile organic carbon - This is the sum of the VOC collected in the trap plus any VOC that passes through the trap into the bag. In the analysis the bag portion is the BAG NMHC (nonmethane hydrocarbon); the trap is burned out and all the VOC converted to carbon dioxide prior to analysis thus the trap portion is the TRAP CO_2.

$$VOC_t \text{ lb/hr} = \frac{(VOC\ BAG_{ave} + VOC\ TRAP_{ave})\ SCFH}{32 \times 10^6}$$

$$VOC_t \text{ lb/hr} = \frac{(291 \text{ bag} + 732 \text{ trap})\ 101499 \text{ SCFH}}{32 \times 10^6}$$

VOC_t = 3.24

BONNER ANALYTICAL TESTING COMPANY
RT. 14, BOX 509
HATTIESBURG, MS 39402
(601) 264-2854

Facility Hercules Inc Location 230 ~~ARS~~ (CRFS)

Date 5/19/88 Run Number 2

Stack Diameter or Dimensions, m(in.) 16"

Barometric Pressure (in. Hg) 30.01 Ambient Temp (F) _____

Cross Sectional Area, (ft^2) 1.046' Operators JS

Pitot Tube I.D. Number 001

Avg. Coefficient, Cp = 1.00
Last Date Calibrated 5/18/88

SCHEMATIC OF STACK CROSS SECTION

Traverse Pt.No.	Vel. Hd., Dp (in.) H_2O	Stack Temperature t_s (F)	P_g (in.Hg)	Dp 0.5
1	0.17	62		
2	0.17	62		
3	0.18	62		
4	0.22	62		
5	0.22	62		
6	0.21	62		
7	0.20	62		
8	0.18	62		
1	0.18	62		
2	0.17	62		
3	0.21	61		
4	0.20	62		
5	0.21	63		
6	0.17	62		
7	0.17	62		
8	0.18	62 = 144°F		
Average	0.190	144°F (604°R)	(30.01)	0.436

BONNER ANALYTICAL TESTING COMPANY
RT. 14, BOX 509
HATTIESBURG, MS 39402
(601) 264-2854

EPA METHOD 25

VOLATILE ORGANIC CARBON

Facility Hercules

Location ZE 230 Carbon Regeneration Furn. Scrubber (CRFS)

Date 5/19/88 Operators JS/MB

Run # 3
Bag # 021
Trap # 021

Barometric Press (in Hg) 30.01

Ambient Temp. (F) _____

Wet Bulb 138
Dry Bulb 144
% Moisture 21

Sample Train Leak Rate ((1 cc/min) 4

Pretest Vacuum 30 in H_2O 0.30 IN/min Leakrate ((1.6 in/min)

Post Test Vacuum 30 in H_2O 0.35 IN/min Leakrate ((1.6 in/min)

DRY GAS METER

Meter # NA

Meter Coef: _____

Date Calibrated _____

	Time	Mass Flow	Source Volumetric Flow Data		
	Clock/Sample	Meter Reading	Cubic feet	Dry Gas Meter Temp(F)	Static Press (in H_2O)
I	1135	100 cc/min			
1	1145	100			
2	1155	100			
3	1205	100			
4	1215	100			
5	1225	100			
6	1235	100			
7					
8					
9					
10					
11					
12					
Total	60				
Average		100 cc/min			

See Attached

BONNER ANALYTICAL TESTING COMPANY
RT. 14, BOX 509
HATTIESBURG, MS 39402
(601) 264-2854

BYRON METHOD 25 Lab Data Sheet

FACILITY Hercules Inc

LOCATION 230 (CRFS) RUN 3

Bag I.D. 021
Volume Collected 6000 Volume Analyzed 6.000
if changed, why

Trap I.D. 021
Volume Collected 6.000 Burnout Volume 6.000

BAG ANALYSIS Date 5/30/88 Analyst MBB/JP

				Average
NMHC	599	604	604	602
CO	279	279	281	280
CO_2	34010	34510	34605	34375
CH_4	22	23	23	23

TRAP ANALYSIS Date 5/25/88 Temperature 300 Analyst JP/MBB

				Average
NMHC	<3	<3	<3	<3
CO	22	27	23	22
CO_2	971	991	989	~~998~~ 984
CH_4	<3	<3	<3	<3

General Comments

VOC = volatile organic carbon - This is the sum of the VOC collected in the trap plus any VOC that passes through the trap into the bag. In the analysis the bag portion is the BAG NMHC (nonmethane hydrocarbon); the trap is burned out and all the VOC converted to carbon dioxide prior to analysis thus the trap portion is the TRAP CO_2.

$$VOC_t \text{ lb/hr} = \frac{(VOC\ BAG_{ave} + VOC\ TRAP_{ave})\ SCFH}{32 \times 10^6}$$

$$VOC_t \text{ lb/hr} = \frac{(602 \text{ bag} + 984 \text{ trap})\ 103826 \text{ SCFH}}{32 \times 10^6}$$

VOC_t = 5.15 lb/hr.

BONNER ANALYTICAL TESTING COMPANY
RT. 14, BOX 509
HATTIESBURG, MS 39402
(601) 264-2854

Facility Hercules Inc Location 230 (CRFS)

Date 5/19/88 Run Number 3

Stack Diameter or Dimensions, m(in.) 16"

Barometric Pressure (in. Hg) ~~1.046~~ 30.01 Ambient Temp (F)

Cross Sectional Area, (ft_2) 1.046 Operators JS/[illegible]/[illegible]

Pitot Tube I.D. Number 001

Avg. Coefficient, Cp = 1.00
Last Date Calibrated 5/18/88

SCHEMATIC OF STACK CROSS SECTION

Traverse Pt. No.	Vel. Hd., Dp (in.) H_2O	Stack Temperature t_s (F)	Pg (in. Hg)	Dp 0.5
1	0.18	61		
2	0.18	61		
3	0.20	62		
4	0.22	62		
5	0.23	62		
6	0.21	63		
7	0.21	63		
8	0.17	62		
1	0.17	61		
2	0.16	62		
3	0.18	62		
4	0.20	62		
5	0.23	62		
6	0.23	62		
7	0.21	62 = 144°F		
8	0.20			
Average	~~0.198~~ 0.199	144°F (604°R)	30.01	0.446

Facility Hercules Inc

Location 230 (CRFS)

Stack Gas Velocity (vs) avg. ser.

$$(Vs)avg. = Kp(p \quad (\Delta P)^{0.5} \quad ((Ts)avg.)^{0.5} \Big/ P_s M_s$$

RUN

1 $= (85.49)(1.0)(0.438)\left(\frac{604}{30.01 * 29}\right)^{.5}$

$= 31.194$

2 $= (85.49)(1.0)(0.436)\left(\frac{604}{30.01 * 29}\right)^{.5}$

$= 31.052$

3 $= (8549)(1.0)(0.446)\left(\frac{604}{30.01 * 29}\right)^{0.5}$

$= 31.764$

Stack Gas Volumetric Flow Rate (std.comd.) Qs $\frac{ft.^3}{hr.}$

$$3600\ (1-Bwo)\ VsA\ \frac{(Tstd.)}{(Ts)avg.}\ \frac{(Ps)}{Pstd.}$$

RUN

1 $= (3600)(0.99)(31.194)(1.046)\left(\frac{528}{604} * \frac{30.01}{29.92}\right)$

$= \boxed{101,962}$

2 $= (3600)(0.99)(31.052)(1.046)\left(\frac{528 * 30.01}{604 * 29.92}\right)$

$= \boxed{101,499}$

3 $= (3600)(0.99)(31.764)(1.046)\left(\frac{528 * 30.01}{604 * 29.92}\right)$

$\boxed{103826}$

MISSISSIPPI DEPARTMENT OF NATURAL RESOURCES
Bureau of Pollution Control
P.O. Box 10385
Jackson, Mississippi 39289-0385
(601) 961-5171

MEMORANDUM

TO: File

FROM: Jesse Thompson, Jr.

SUBJECT: Stack Test Review

DATE: May 25, 1989



Facility No. 110-0800-00001-082

The review of the test data submitted for the Kettle vent has been reviewed. EPA Method 25 was used to analyze the samples. The review did not reveal any problems. I recommend that the test be accepted.

JT:els

BONNER ANALYTICAL TESTING COMPANY
RT. 14, BOX 509
HATTIESBURG, MS 39402
(601) 264-2854

EPA METHOD 25

VOLATILE ORGANIC CARBON

Facility Hercules, Inc. - Hattiesburg, MS

Location 082 - Kettle Vent

Date 5/6/88 Operators JP/MSB

Run # 1
Bag # 001
Trap # 001

Barometric Press (in Hg) 30.00

Ambient Temp. (F) 85

Wet Bulb 27 C
Dry Bulb 35 C
% Moisture <1

Sample Train Leak Rate (<1 cc/min) <1.0 cc/min

Pretest Vacuum 30 in H_2O <0.3 in/min Leakrate (<1.6 in/min)

Post Test Vacuum 30 in H_2O <0.3 in/min Leakrate (<1.6 in/min)

	Time	Mass Flow	Source Volumetric Flow Data		
	Clock/Sample	Meter Reading	Cubic feet	Dry Gas Meter Temp (F)	Static Press (in H_2O)
I	1405	165 cc/min			
1	1415	165 cc/min			
2	1425	165 cc/min			
3	1435	165 cc/min	SEE PITOT TRAVERSE		
4	1445	165 cc/min			
5	1455	165 cc/min			
6	1505	165 cc/min			
7					
8					
9					
10					
11					
12					
Total	60				
Average		165 cc/min			

BONNER ANALYTICAL TESTING COMPANY
RT. 14, BOX 509
HATTIESBURG, MS 39402
(601) 264-2854

Facility Hercules, Inc. Location 082 - Kettle Vent

Date 5/6/88 Run Number 1

Stack Diameter or Dimensions, m(in.) Rect: 1.58' X 1.58'

Barometric Pressure (in. Hg) 30.00 Ambient Temp (F) 85

Cross Sectional Area, (ft_2) 2.507 Operators JP/MSB

Pitot Tube I.D. Number 001

Avg. Coefficient, Cp = 1.00
Last Date Calibrated 5/1/88

SCHEMATIC OF STACK CROSS SECTION

Traverse Pt.No.	Vel. Hd., Δp (in.) H_2O	Stack Temperature t_s (F)	P_s (in.Hg)	Δp o.s
1	0.02	95		
2	0.02	95		
3	0.02	95		
4	0.02	95		
5	0.02	95		
6	0.02	95		
7	0.02	95		
8	0.02	95		
9	0.02	95		
10	0.02	95		
11	0.02	95		
12	0.02	95		
13	0.02	95		
14	0.02	95		
15	0.02	95		
16	0.015	95		
Average	(0.02)	95 (555R)	30.00	(0.1414)

BONNER ANALYTICAL TESTING COMPANY
RT. 14, BOX 509
HATTIESBURG, MS 39402
(601) 264-2854

BYRON METHOD 25 Lab Data Sheet

FACILITY Hercules, Inc.

LOCATION 082 Kettle Vent WS RUN # 1

Bag I.D. 001
Volume Collected 7.500 Volume Analyzed 7.500
if changed, why

Trap I.D. 001
Volume Collected 7.500 Burnout Volume 6.500

BAG ANALYSIS

Date 5/30/88 Analyst MSB/JP

				Average
NMHC	2060	2025	2065	2050
CO	344	336	344	342
CO_2	1557	1588	1578	1574
CH_4	302	305	320	309

TRAP ANALYSIS

Date 5/30/88 Temperature 300 C Analyst MSB/JP

				Average
NMHC	<3	<3	<3	<3
CO	<3	<3	<3	<3
CO_2	1352	1285	1390	1342
CH_4	<3	<3	<3	<3

General Comments

VOC = volatile organic carbon - This is the sum of the VOC collected in the trap plus any VOC that passes through the trap into the bag. In the analysis the bag portion is the BAG NMHC (nonmethane hydrocarbon); the trap is burned out and all the VOC converted to carbon dioxide prior to analysis thus the trap portion is the TRAP CO_2.

$$VOC_+ \text{ lb/hr} = \frac{(VOC\ BAG_{ave} + VOC\ TRAP_{ave})\ SCFH}{32 \times 10^6}$$

$$VOC_+ \text{ lb/hr} = \frac{(2050 \text{ bag} + 1342 \text{ trap})\ 86258\ SCFH}{32 \times 10^6}$$

$$VOC_+ = \boxed{9.14 \text{ lb/hr.}}$$

BONNER ANALYTICAL TESTING COMPANY
RT. 14, BOX 509
HATTIESBURG, MS 39402
(601) 264-2854

EPA METHOD 25

VOLATILE ORGANIC CARBON

Facility Hercules, Inc. - Hattiesburg, MS

Location 082 - Kettle Vent Water Scrubber

Date 5/6/88 Operators JP/MSB

Run # 2
Bag # 002
Trap # 002

Barometric Press (in Hg) 30.00

Ambient Temp. (F) 85

Wet Bulb 29 C
Dry Bulb 32 C
% Moisture <1

Sample Train Leak Rate (<1 cc/min) <1.0 cc/min

Pretest Vacuum 30 in H_2O 0.30 in/min Leakrate (<1.6 in/min)

Post Test Vacuum 30 in H_2O 0.30 in/min Leakrate (<1.6 in/min)

	Time	Mass Flow	Source Volumetric Flow Data		
	Clock/Sample	Meter Reading	Cubic feet	Dry Gas Meter Temp (F)	Static Press (in H_2O)
I	1520	125 cc/min			
1	1530	125 cc/min			
2	1540	125 cc/min			
3	1550	125 cc/min	SEE PITOT TRAVERSE		
4	1600	125 cc/min			
5	1610	125 cc/min			
6	1620	125 cc/min			
7					
8					
9					
10					
11					
12					
Total	60				
Average		125 cc/min			

BUNNER ANALYTICAL TESTING COMPANY
RT. 14, BOX 509
HATTIESBURG, MS 39402
(601) 264-2854

Facility Hercules, Inc. Location 082 - Kettle Vent

Date 5/6/88 Run Number 2

Stack Diameter or Dimensions, m(in.) Rect: 1.58' X 1.58'

Barometric Pressure (in. Hg) 30.00 Ambient Temp (F) 85

Cross Sectional Area, (ft_2) 2.507 Operators JP/MSB

Pitot Tube I.D. Number 001

Avg. Coefficient, Cp = 1.00
Last Date Calibrated 5/1/88

SCHEMATIC OF STACK CROSS SECTION

Traverse Pt.No.	Vel. Hd., Δp (in.) H_2O	Stack Temperature t_s (F)	P_g (in.Hg)	$\Delta p_{o.s}$
1	0.02	94		
2	0.02	94		
3	0.02	95		
4	0.02	95		
5	0.02	95		
6	0.02	95		
7	0.02	95		
8	0.02	95		
9	0.02	95		
10	0.02	95		
11	0.02	95		
12	0.02	95		
13	0.02	95		
14	0.02	95		
15	0.02	95		
16	0.02	95		
Average	(0.02)	95 (555R)	30.00	(0.1414)

BONNER ANALYTICAL TESTING COMPANY
RT. 14, BOX 509
HATTIESBURG, MS 39402
(601) 264-2854

BYRON METHOD 25 Lab Data Sheet

FACILITY Hercules, Inc.

LOCATION 082 Kettle Vent WS RUN # 2

Bag I.D. 002
Volume Collected 7.500 Volume Analyzed 7.500
if changed, why

Trap I.D. 002
Volume Collected 7.500 Burnout Volume 8.000

BAG ANALYSIS

Date 5/30/88 Analyst MSB/JP

				Average
NMHC	1375	1393	1402	1390
CO	587	591	595	591
CO_2	2376	2329	2338	2347
CH_4	333	327	339	333

TRAP ANALYSIS

Date 5/30/88 Temperature 300 C Analyst MSB/JP

				Average
NMHC	<3	<3	<3	<3
CO	<3	<3	<3	<3
CO_2	1614	1652	1608	1622
CH_4	<3	<3	<3	<3

General Comments

VOC = volatile organic carbon - This is the sum of the VOC collected in the trap plus any VOC that passes through the trap into the bag. In the analysis the bag portion is the BAG NMHC (nonmethane hydrocarbon); the trap is burned out and all the VOC converted to carbon dioxide prior to analysis thus the trap portion is the TRAP CO_2.

$$VOC_+ \text{ lb/hr} = \frac{(\text{VOC BAG}_{ave} + \text{VOC TRAP}_{ave})\ \text{SCFH}}{32 \times 10^6}$$

$$VOC_+ \text{ lb/hr} = \frac{(1390 \text{ bag} + 1622 \text{ trap})\ 86258\ \text{SCFH}}{32 \times 10^6}$$

VOC_+ = 8.12 lb/hr.

BONNER ANALYTICAL TESTING COMPANY
RT. 14, BOX 509
HATTIESBURG, MS 39402
(601) 264-2854

EPA METHOD 25

VOLATILE ORGANIC CARBON

Facility Hercules, Inc. - Hattiesburg, MS

Location 082 - Kettle Vent WS

Date 5/6/88 Operators JF/MSB

Run # 3
Bag # 003
Trap # 003

Barometric Press (in Hg) 30.00

Ambient Temp. (F) 85

Wet Bulb 29 C
Dry Bulb 37 C
% Moisture <1

Sample Train Leak Rate (<1 cc/min) <1.0 cc/min

Pretest Vacuum 30 in H_2O 0.30 in/min Leakrate (<1.6 in/min)

Post Test Vacuum 30 in H_2O 0.30 in/min Leakrate (<1.6 in/min)

	Time	Mass Flow	Source Volumetric Flow Data		
	Clock/Sample	Meter Reading	Cubic feet	Dry Gas Meter Temp (F)	Static Press (in H_2O)
I	1640	125 cc/min			
1	1650	125 cc/min			
2	1700	125 cc/min			
3	1710	125 cc/min	SEE PITOT TRAVERSE		
4	1720	125 cc/min			
5	1730	125 cc/min			
6	1740	125 cc/min			
7					
8					
9					
10					
11					
12					
Total	60				
Average		125 cc/min			

BONNER ANALYTICAL TESTING COMPANY
RT. 14, BOX 509
HATTIESBURG, MS 39402
(601) 264-2854

Facility Hercules, Inc. Location 082 - Kettle Vent

Date 5/6/88 Run Number 3

Stack Diameter or Dimensions, m(in.) Rect: 1.58' X 1.58'

Barometric Pressure (in. Hg) 30.00 Ambient Temp (F) 85

Cross Sectional Area, (ft_2) 2.507 Operators JP/MSB

Pitot Tube I.D. Number 001

Avg. Coefficient, Cp = 1.00
Last Date Calibrated 5/1/88

SCHEMATIC OF STACK CROSS SECTION

Traverse Pt.No.	Vel. Hd., Δp (in.) H_2O	Stack Temperature t_s (F)	P_s (in.Hg)	Δp o.s
1	0.02	98		
2	0.02	98		
3	0.02	98		
4	0.02	98		
5	0.02	98		
6	0.02	98		
7	0.02	98		
8	0.02	98		
9	0.02	98		
10	0.02	98		
11	0.03	98		
12	0.02	98		
13	0.02	94		
14	0.02	94		
15	0.02	94		
16	0.02	94		
Average	(0.02)	95 (558R)	30.00	(0.1414)

BUNNER ANALYTICAL TESTING COMPANY
RT. 14, BOX 509
HATTIESBURG, MS 39402
(601) 264-2854

BYRON METHOD 25 Lab Data Sheet

FACILITY Hercules, Inc.

LOCATION 082 Kettle Vent WS RUN # 3

Bag I.D. 003
Volume Collected 7.500 Volume Analyzed 7.500
if changed, why

Trap I.D. 003
Volume Collected 7.500 Burnout Volume 6.250

BAG ANALYSIS

Date 5/30/88 Analyst MSB/JP

				Average
NMHC	3242	3355	3186	3261
CO	131	128	128	129
CO_2	9290	9315	9325	9310
CH_4	793	777	779	782

TRAP ANALYSIS

Date 5/30/88 Temperature 300 C Analyst MSB/JP

				Average
NMHC	<3	<3	<3	<3
CO	<3	<3	<3	<3
CO_2	3305	3165	3105	3192
CH_4	<3	<3	<3	<3

General Comments

VOC = volatile organic carbon - This is the sum of the VOC collected in the trap plus any VOC that passes through the trap into the bag. In the analysis the bag portion is the BAG NMHC (nonmethane hydrocarbon); the trap is burned out and all the VOC converted to carbon dioxide prior to analysis thus the trap portion is the TRAP CO_2.

$$VOC_+ \text{ lb/hr} = \frac{(VOC\ BAG_{ave} + VOC\ TRAP_{ave})\ SCFH}{32 \times 10^6}$$

$$VOC_+ \text{ lb/hr} = \frac{(3261 \text{ bag} + 3192 \text{ trap})\ 82059\ SCFH}{32 \times 10^6}$$

$$VOC_+ = \boxed{16.54 \text{ lb/hr.}}$$

Facility Hercules, Inc.

Location 082 Kettle Vent Water Scrubber

Stack Gas Velocity (vs) avg. sec.

$(Vs)avg. = KpCp \quad (\Delta P)^{0.5} \quad ((Ts)avg.)^{0.5}$

RUN

$$1 = 85.48 \times 1 \times 0.1414 \left(\frac{555}{30.00 \times 29}\right)^{0.5}$$

$$= \boxed{9.654}$$

$$2 = 85.48 \times 1 \times 0.1414 \left(\frac{555}{30.00 \times 29}\right)^{0.5}$$

$$= \boxed{9.654}$$

$$3 = 85.48 \times 1 \times 0.1414 \left(\frac{558}{30.00 \times 29}\right)^{0.5}$$

$$= \boxed{9.680}$$

Stack Gas Volumetric Flow Rate (std.cond.) Qs $\frac{ft.^3}{hr.}$

$$3600\ (1-Bwo)\ VsA\ \frac{(Tsta.)}{(Ts)avg.}\ \frac{(Ps)}{Pstd.}$$

RUN

$$1 = (3600)(0.99)(9.654)(2.507)\left(\frac{528 \times 30.00}{555 \times 29.92}\right)$$

$$= \boxed{86258\ \frac{ft^3}{hr}}$$

$$2 = (3600)(0.99)(9.654)(2.507)\left(\frac{528 \times 30.00}{555 \times 29.92}\right)$$

$$= \boxed{86258\ \frac{ft^3}{hr}}$$

$$3 = (3600)(0.99)(9.680)(2.507)\left(\frac{528 \times 30.00}{558 \times 29.92}\right)$$

$$= \boxed{82059\ \frac{ft^3}{hr}}$$

BARNES ANALYTICAL TESTING COMPANY
RT. 14, BOX 509
HATTIESBURG, MS 39402
(601) 264-2854

p. xx 5

EPA METHOD 25

VOLATILE ORGANIC CARBON

Facility Hercules Bay

Location 082 - Kettle Vent Water Scrubber

Date 5/06/88 Operators JP/MSB

Run # 1
Bag # 001
Trap # 001

Barometric Press (in Hg) 30.00

Ambient Temp. (F) 85

Wet Bulb 27C
Dry Bulb 35C
% Moisture <1

Sample Train Leak Rate ((1 cc/min) <1

Pretest Vacuum 30 in H_2O <0.3 in/min Leakrate ((1.6 in/min)

Post Test Vacuum 30 in H_2O <0.3 in/min Leakrate ((1.6 in/min)

* Malaise

DRY GAS METER

Meter # NA

Meter Coef:

Date Calibrated

	Time	Mass Flow	Source Volumetric Flow Data		
	Clock/Sample	Meter Reading	Cubic feet	Dry Gas Meter Temp(F)	Static Press (in H_2O)
I	1405	165165			
1	1415	165 cc/mm	See	Pitot Traverse	
2	1425	165			
3	1435	165			
4	1445	165			
5	1455	165			
6	1505	165			
7					
8					
9					
10					
11					
12					

Total 60

Average 165 cc/mm

BONNER ANALYTICAL TESTING COMPANY
RT. 14, BOX 509
HATTIESBURG, MS 39402
(601) 264-2854

Facility Herbalex Location 082 - Kettle Vent

Date 5/6/88 Run Number 1

Stack Diameter or Dimensions, m(in.) Rect: 1.58' * 1.58'

Barometric Pressure (in. Hg) 30.00 Ambient Temp (F) 85

Cross Sectional Area, (ft^2) 2.507 Operators JP/MSB

Pitot Tube I.D. Number 001

Avg. Coefficient, Cp = 1.00
Last Date Calibrated 5/1/88

SCHEMATIC OF STACK CROSS SECTION

Traverse Pt. No.	Vel. Hd., Dp (in.) H_2O	Stack Temperature t_s (F)	P_g (in. Hg)	Dp 0.5
1	0.02	95		
2	0.02	95		
3	0.02	95		
4	0.02	95		
5	0.02	95		
6	0.02	95		
7	0.02	95		
8	0.02	95		
9	0.02	95		
10	0.02	95		
11	0.02	95		
12	0.02	95		
13	0.02	95		
14	0.02	95		
15	0.02	95		
16	0.015	95		
Average	(0.02)	95 (555R)	30.00	(0.1414)

BONNER ANALYTICAL TESTING COMPANY
RT. 14, BOX 509
HATTIESBURG, MS 39402
(601) 264-2854

BYRON METHOD 25 Lab Data Sheet

FACILITY Hercules Inc

LOCATION 082 Kettleman W S RUN 1

Bag I.D. 001
Volume Collected 7.500 Volume Analyzed 7.500
if changed, why

Trap I.D. 001
Volume Collected 7.500 Burnout Volume 6.500

BAG ANALYSIS Date 5/30/88 Analyst MSB/JP

				Average
NMHC	2060	2025	2065	2050
CO	344	336	344	342
CO_2	1557	1588	1578	1574
CH_4	302	305	320	309

TRAP ANALYSIS Date 5/30/88 Temperature 300° Analyst MSB/JP

				Average
NMHC	<3	<3	<3	<3
CO	<3	<3	<3	<3
CO_2	1352	1285	1390	1342
CH_4	<3	<3	<3	<3

General Comments

VOC = volatile organic carbon - This is the sum of the VOC collected in the trap plus any VOC that passes through the trap into the bag. In the analysis the bag portion is the BAG NMHC (nonmethane hydrocarbon); the trap is burned out and all the VOC converted to carbon dioxide prior to analysis thus the trap portion is the TRAP CO_2.

$$VOC_t \text{ lb/hr} = \frac{(VOC\ BAG_{ave} + VOC\ TRAP_{ave})\ SCFH}{32 \times 10^6}$$

$$VOC_t \text{ lb/hr} = \frac{(2030 \text{ bag} + 1342 \text{ trap})\ 86258\ SCFH}{32 \times 10^6}$$

VOC_t = 9.11

BONNER ANALYTICAL TESTING COMPANY
RT. 14, BOX 509
HATTIESBURG, MS 39402
(601) 264-2854

EPA METHOD 25

VOLATILE ORGANIC CARBON

Facility Hercules

Location 082 - Kettle Vent

Date 05/06/88 Operators JP/MSB

Run # 2
Bag # 602
Trap # 002

Barometric Press (in Hg) 30.00

Ambient Temp. (F) 85

Wet Bulb ~~77~~ 29
Dry Bulb ~~85~~ 32
% Moisture <1

Sample Train Leak Rate (<1 cc/min) <1

Pretest Vacuum 30 in H_2O 0.30 in/min Leakrate (<1.6 in/min)

Post Test Vacuum 30 in H_2O 0.30 in/min Leakrate (<1.6 in/min)

DRY GAS METER

Meter # NA

Meter Coef:

Date Calibrated

	Time Clock/Sample	Mass Flow Meter Reading	Source Volumetric Flow Data: Cubic feet	Dry Gas Meter Temp(F)	Static Press (in H_2O)
I	~~1505~~ 1520	~~125~~ 125			
1	~~1515~~ 1530	125		See Petot	Traverse
2	~~1525~~ 1540	125			
3	~~1535~~ 1550	125			
4	~~1545~~ 1600	125			
5	~~1555~~ 1610	125			
6	~~1605~~ 1620	125			
7					
8					
9					
10					
11					
12					
Total	60				
Average		125 cc/min			

BONNER ANALYTICAL TESTING COMPANY
RT. 14, BOX 509
HATTIESBURG, MS 39402
(601) 264-2854

Facility Hercules Location 082 Kettle Vent

Date 5/6/88 Run Number 2

Stack Diameter or Dimensions, m(in.) 1.58' * 1.58

Barometric Pressure (in. Hg) 30.00 Ambient Temp (F) 85

Cross Sectional Area, (ft^2) 2.507 Operators JP/mb

Pitot Tube I.D. Number 001

Avg. Coefficient, Cp = 1.00
Last Date Calibrated 5/4/88

SCHEMATIC OF STACK CROSS SECTION

Traverse Pt. No.	Vel. Hd., Dp (in.) H_2O	Stack Temperature t_s (F)	P_g (in. Hg)	Dp 0.5
1	0.02	94		
2	0.02	94		
3	0.02	95		
4	0.02	95		
5	0.02	95		
6	0.02	95		
7	0.02	95		
8	0.02	95		
9	0.02	95		
10	0.02	95		
11	0.02	95		
12	0.02	95		
13	0.02	95		
14	0.02	95		
15	0.02	95		
16	0.02	95		
Average	0.02	95 (555R)	30.00	0.1414

BONNER ANALYTICAL TESTING COMPANY
RT. 14, BOX 509
HATTIESBURG, MS 39402
(601) 264-2854

BYRON METHOD 25 Lab Data Sheet

FACILITY Hercules Inc

LOCATION 082 - Kettle Vent RUN 2

Bag I.D. 002
Volume Collected 7.500 Volume Analyzed 7.500
if changed, why

Trap I.D. 002
Volume Collected 7.500 Burnout Volume 8.000

BAG ANALYSIS Date 5/30/88 Analyst JP/MSB

				Average
NMHC	1375	1393	1402	1390
CO	587	591	595	591
CO_2	2376	2329	2338	2347
CH_4	333	327	389	333

TRAP ANALYSIS

Date 5/30/88 Temperature 300°C Analyst JP/MSB

				Average
NMHC	<3	<3	<3	<3
CO	<3	<3	<3	<3
CO_2	1614	~~1577~~ 1652	1608	~~1600~~ 1622
CH_4	<3	<3	<3	<3

General Comments

VOC = volatile organic carbon - This is the sum of the VOC collected in the trap plus any VOC that passes through the trap into the bag. In the analysis the bag portion is the BAG NMHC (nonmethane hydrocarbon); the trap is burned out and all the VOC converted to carbon dioxide prior to analysis thus the trap portion is the TRAP CO_2.

$$VOC_t \text{ lb/hr} = \frac{(VOC\ BAG_{ave} + VOC\ TRAP_{ave})\ SCFH}{32 \times 10^6}$$

$$VOC_t \text{ lb/hr} = \frac{(1390 \text{ bag} + 1622 \text{ trap})\ 86258 \text{ SCFH}}{32 \times 10^6}$$

VOC_t = 517

BONNER ANALYTICAL TESTING COMPANY
RT. 14, BOX 509
HATTIESBURG, MS 39402
(601) 264-2854

EPA METHOD 25

VOLATILE ORGANIC CARBON

Facility Hercules

Location 082 Kettle Vents

Date 05/04/88 Operators JP/MSB

Run # 3
Bag # 003
Trap # 003

Barometric Press (in Hg) 30.00

Ambient Temp. (F) 85

Wet Bulb 29
Dry Bulb ~~35~~ 37
% Moisture <1

Sample Train Leak Rate (<1 cc/min) <1

Pretest Vacuum 30 in H_2O 0.30 in/min Leakrate (<1.6 in/min)

Post Test Vacuum 30 in H_2O 0.30 in/min Leakrate (<1.6 in/min)

DRY GAS METER

Meter # VB

Meter Coef:

Date Calibrated

	Time Clock/Sample	Mass Flow Meter Reading	Source Volumetric Flow Data: Cubic feet	Dry Gas Meter Temp(F)	Static Press (in H_2O)
I	~~1635~~ 1640	125			
1	~~1645~~ 1650	125	See Pitot	TRAVERSE	
2	~~1655~~ 1700	125			
3	~~1705~~ 1710	125			
4	~~1715~~ 1720	125			
5	~~1725~~ 1730	~~125~~ 125			
6	~~1735~~ 1740	125			
7					
8					
9					
10					
11					
12					
Total	60				
Average		125 cc/min			

080

BONNER ANALYTICAL TESTING COMPANY
RT. 14, BOX 509
HATTIESBURG, MS 39402
(601) 264-2854

Facility Hercules Location 082 Kettle Vent

Date 5/6/88 Run Number 3

Stack Diameter or Dimensions, m(in.) 1.58' * 1.58'

Barometric Pressure (in. Hg) 30.00 Ambient Temp (F) 85

Cross Sectional Area, (ft^2) 2.507 Operators

Pitot Tube I.D. Number 001

Avg. Coefficient, Cp = 1.00
Last Date Calibrated 5/6/88

SCHEMATIC OF STACK CROSS SECTION

Traverse Pt.No.	Vel. Hd., Dp (in.) H_2O	Stack Temperature t_s (F)	P_g (in.Hg)	Dp 0.5
1	0.02	98		
2	0.02	98		
3	0.02	98		
4	0.02	98		
5	0.02	98		
6	0.02	98		
7	0.02	98		
8	0.02	98		
9	0.02	98		
10	0.02	98		
11	0.03	98		
12	0.02	98		
13	0.02	97		
14	0.02	96		
15	0.02	97		
16	0.02	97		
Average	0.02	98 (SS8R)	30.00	0.1414

BONNER ANALYTICAL TESTING COMPANY
RT. 14, BOX 509
HATTIESBURG, MS 39402
(601) 264-2854

BYRON METHOD 25 Lab Data Sheet

FACILITY Hercules Inc

LOCATION 087 Kettle Vent RUN 3

Bag I.D. 008003
Volume Collected 7.500 Volume Analyzed 7.500
if changed, why

Trap I.D. 003
Volume Collected 7.500 Burnout Volume ~~7.500~~ 6.250

BAG ANALYSIS Date 5/30/88 Analyst JP/MSB

				Average
NMHC	3242	3355	3186	3261
CO	131	128	128	129
CO_2	9296	9315	9325	9310
CH_4	793	771	779	782

TRAP ANALYSIS

Date 5/30/88 Temperature 300 Analyst JP

				Average
NMHC	<3	<3	<3	<3
CO	<3	<3	<3	<3
CO_2	3305	3165	3105	3192
CH_4	<3	<3	<3	<3

General Comments

VOC = volatile organic carbon - This is the sum of the VOC collected in the trap plus any VOC that passes through the trap into the bag. In the analysis the bag portion is the BAG NMHC (nonmethane hydrocarbon); the trap is burned out and all the VOC converted to carbon dioxide prior to analysis thus the trap portion is the TRAP CO_2.

$$VOC_t \text{ lb/hr} = \frac{(VOC\ BAG_{ave} + VOC\ TRAP_{ave})\ SCFH}{32 \times 10^6}$$

$$VOC_t \text{ lb/hr} = \frac{(3261 \text{ bag} + 3192 \text{ trap})\ 82059\ SCFH}{32 \times 10^6}$$

VOC_t = 16.54 lb/hr.

Facility Hercules Inc

Location 082 Kettle Vent Water Scrubber

Stack Gas Velocity (vs) avg. sec.

$$(Vs)avg. = KpCp\ (\Delta P)^{0.5}\ \frac{((Ts)avg.)^{0.5}}{P_s M_s}$$

RUN

1 $= 85.48 * 1 * 0.1414 * \cancel{23.56} * \left(\frac{555}{30.00 * 29}\right)^{0.5}$

$= \boxed{9.654}$

2 $= 85.48 * 1 * 0.1414 * \cancel{23.56} \left(\frac{555}{30.00 * 29}\right)^{0.5}$

$= \boxed{9.654}$

3 $85.48 * 1 * 0.1414 * \cancel{23.62} \left(\frac{558}{30.00 * 29}\right)^{0.5}$

$= \boxed{9.680}$

Stack Gas Volumetric Flow Rate (std.cond.) Qs ft.³/hr.

$$3600\ (1-Bwo)\ VsA\ \frac{(Tstd.)}{(Ts)avg.}\ \frac{(Ps)}{Pstd.}$$

RUN

1 $= (3600)(.99)(9.654)(2.507)\left(\frac{528 * 30.00}{555 * 29.92}\right)$

$= \boxed{86258\ ft^3/Hr}$

2 $(3600)(.99)(9.654)(2.507)\left(\frac{528 * 30.00}{555 * 29.92}\right)$

$= \boxed{86258\ ft^3/Hr}$

3 $(3600)(.99)(9.680)(2.507)\left(\frac{528 * 30.00}{558 * 29.92}\right)$

$= \boxed{82059\ ft^3/Hr}$

MISSISSIPPI DEPARTMENT OF NATURAL RESOURCES
Bureau of Pollution Control
P.O. Box 10385
Jackson, Mississippi 39289-0385
(601) 961-5171

MEMORANDUM

TO: File

FROM: Jesse Thompson, Jr.

SUBJECT: Stack Test Review

DATE: June 2, 1989

Facility No. 110-0800-00001-172

The review of the test data for emission point 172 has been finalized. The test was conducted using Method 5. The review calculation did not reveal any problems. The recalculations are attached. I recommend that the test be accepted.

JT:dfj

Plant Hercules, Inc.
Location Hattiesburg, #172
Operator DJM/JRW
Date May 18, 1988
Run no. #1
Sample box no 001

Meter box no 001
Meter -H@ 1.83
C factor 1.10
Pilot tube
coefficient, Cp 0.84

Ambient temperature 80 F
Barometric pressure 29.83
Assumed moisture, % 5%
Probe length, (ft) 6
Nozzle identification no .250
Average calibrated nozzle
diameter, cm (in) .250 in.
Probe heater setting 60
Leak rate m³/min, (cfm) 0
Probe liner material SS
Static pressure, mm Hg (in. Hg) 29.90
Filter No.

SCHEMATIC OF STACK
CROSS SECTION

Start Time: 1109 hrs

End Time: 1323 hrs

T.P #	Sample time (min)	Vacuum (in. Hg)	Stack temp. (F) (Ts)	Velocity head (in) (p)	Pressure differ across orific meter	Gas sample volume (cf)	Gas Samole temp. @ dry gas meter Inlet (F)	Outlet (F)	Filter holder temp. (F)	Temp. of gas leaving condenser or last impinger (F)
Initial						270.201				
1	4 min	1.0	85	.180	0.90	272.98	92	90	250	< 65
2	4 min	1.0	85	.200	0.95	275.15	98	92	250	< 65
3	4 min	2.0	87	.220	1.00	277.26	100	92	250	< 65
4	4 min	2.0	88	.240	1.10	279.44	102	93	245	< 65
5	4 min	3.0	94	.300	1.40	281.88	106	94	245	< 65
6	4 min	3.0	85	.310	1.45	284.46	109	96	245	< 65
7	4 min	3.0	91	.360	1.70	287.18	112	96	240	< 65
8	4 min	3.5	91	.370	1.72	290.01	114	98	245	< 65
9	4 min	2.0	80	.200	0.95	292.04	100	98	245	< 65
10	4 min	2.0	80	.210	0.97	294.23	101	98	235	< 65
11	4 min	2.0	89	.230	1.05	296.51	104	98	240	< 65
12	4 min	2.5	90	.300	1.40	299.06	105	98	240	< 65
13	4 min	3.0	91	.350	1.60	301.74	110	98	240	< 65
14	4 min	3.0	91	.370	1.72	304.52	114	100	250	< 65
15	4 min	4.0	92	.330	1.50	307.34	115	101	240	< 65
16	4 min	4.0	90	.330	1.50	310.032	118	102	240	< 65
17										
18										
19										
20										
21										
22										
23										
24										
T.			1409	4.5	29.91	39.831	1700	1544	3900	
Avg.			88	28	1.31	39.831	106	96	244	
			548 R				561.375 R			

BONNER ANALYTICAL TESTING COMPANY
RT. 13, BOX 85
HATTIESBURG, MS. 39401
(601)264-2854

NOMOGRAPH DATA

PLANT Hercules, Inc.

DATE 5/18/88

SAMPLING LOCATION Silica Dryer

RUN #1

CALIBRATED PRESSURE DIFFERENTIAL ACROSS ORIFICE, in. H_2O	$H_@$	1.83
AVERAGE METER TEMPERATURE (80 + 30 F) F	$T_{m\ avg.}$	120 F
PERCENT MOISTURE IN GAS STREAM BY VOLUME	B_{wo}	5%
BAROMETRIC PRESSURE AT METER, in. Hg	P_m	29.89
STATIC PRESSURE IN STACK, in. Hg (P_m 29.99 + (+0.073 x STACK GUAGE PRESSURE in in. H_2O) (.073)(.11))	P_s	29.90
RATIO OF STATIC PRESSURE TO METER PRESSURE	$s\ P_m$	1.000
AVERAGE STACK TEMPERATURE, F	$T_{s\ avg.}$	86
AVERAGE VELOCITY HEAD, in. H_2O	$p_{avg.}$	.30
MAXIMUM VELOCITY HEAD, in. H_2O	$p_{avg.}$	.43
C FACTOR		1.10
CALCULATED NOZZLE DIAMRTER, in.		2.70
ACTUAL NOZZLE DIAMETER, in.		2.50
REFERENCE p, in. H_2O		.40

HER-172-1

1. Summary of Field Data

Run #1

1. Ambient Temperature (F): 80 F
2. Weather: Clear
3. Stack Height (ft): 48 ft.
4. Stack Area (ft): 0.785 ft.
5. Meter H@: 1.83
6. Pitot Correction Factor: 0.84
7. Nomograph C_f : 1.10
8. Probe Heater Setting: 60%
9. Filter Box Temperature (F): 240
10. Last Impinger Temperature (F): < 65
11. Sample Time/Point: 4 min.
12. Points/Traverse: 16 Total
13. Probe Length: 6 ft.
14. Nozzle Diameter: 0.246
15. V : 39.831
16. Pbar: 29.89
17. Pavg: 0.28
18. $\Delta P^{.5}$ avg : 0.529
19. Havg: 1.31
20. Tsavg (F): 68
21. Tsavg (R): 548
22. TmIavg (F): 106
23. TmOavg (F): 96
24. Tmavg (F): 101
25. Tmavg (R): 561
26. Pm: 29.89
27. Ps: 29.90
28. V_{lc} : 9.73 ml

HSR-172-1

3. Impinger Data

	1st	2nd	3rd	4th
Final	100	100	0	209.73
Initial	100	100	0	200
Difference	0	0	0	9.73
			Total difference	9.73

4. Fyrite Data

Run #1

% Carbon Dioxide = 0, 0, 0

% Oxygen = 21.2, 21.2, 21.2

% Carbon Monoxide =

$$\text{Excess Air (ea)} = (\%O_2) - 0.5\,(\%CO)/0.264\,(\%N_2) - (\%o) + 0.5\,(\%CO)$$

=

$$M_d - 0.44\,(\%CO_2) + 0.32\,(O_2) + 0.28\,(\%N_2 + \%CO)$$

$$= (0.44 \times 0) + 0.32\,(21.2 + .28)(79.8)$$
$$= 29.13$$

$$M_s = M_d\,(1-S_{wo}) + 18(B_{wo})$$
$$= 29.13(0.9886)18(0.0114)$$

$$M_s = 29.00$$

HER-172-1

5. Filter Data

Run #1

	Filter	H O Fraction	Acetone Fraction	Acetone Blank	Filter Blank
Final wt	1.9905		89.2466	92.7644	0.7369
Initial wt	0.7610		89.1007	92.7641	0.7369
Difference	1.2295		0.1459	0.0003	0.0000
Corr.	0.0000		- 0.0003		
Sample wt	1.2295		0.1456		

Total weight 1.3751

HER-172-1

Run No. #1

1. Average Dry Gas Meter Temperature: (f)
   Have =
   Pave =

2. Dry Gas Volume:
$$Vmstd = 17.64 * Vm * Y \left(\frac{Pbar + H/13.6}{Tm}\right) = 17.64 \times 39.831 \times 1.05 \times \left(\frac{29.89 + \frac{1}{1}}{561}\right)$$
$$= \boxed{39.434}$$

3. Volume of water Vapor:
$$Vwstd = 0.04707\ ft3/ml * Vlc = 0.04707 \times 9.73$$
$$= \boxed{0.458}$$

4. Moisture Content:
$$Bwo = \frac{Vwstd}{Vwstd + Vmstd} = \frac{0.458}{0.458 + 39.434}$$
$$= \boxed{0.0114 \text{ or } 1.14\%}$$

5. Concentration in gr/SCF:
$$C's = (0.0154\ gr/mg)\ (Mn/Vmstd) = 0.0154 \times \frac{1375.1}{39.434}$$
$$= \boxed{0.537}$$

6. Concentration in lb/ft3:
$$Cs = 2.205 \times 10\text{-}6\ (Mn/Vmstd) = 2.205 \times 10^{-6} \times \frac{1375.1}{39.434}$$
$$= \boxed{7.689 \times 10^{-5}}$$

7. Stack Gas Velocity:
$$Vsavg. = (85.49)(Co)(Pavg)\left(\frac{Ts\ avg}{PsMs}\right)^{.5} = 85.49 \times 0.84 \times 0.529 \left(\frac{548}{29.90 \times 29.00}\right)^{.5}$$
$$= \boxed{30.199}$$

8. Stack Gas Volumetric Flowrate:
$$Qs = 3600(1-Bws)(Vs)(A)\frac{Tstd}{Tsavg}\frac{Ps}{Pstd} = (3600)(0.9886)(30.199)(0.785)\left(\frac{(529)(29.90)}{(548)(29.92)}\right)$$
$$= \boxed{81235}$$

9. Pollutant Mass Emission Rate, lb/hr:
$$PMRc = (Qs)\ (Cs) = 81235 \times 7.689 \times 10^{-5}$$
$$= \boxed{6.246}$$

10. Percent Isokinetic:
$$I = (0.09450)\frac{Ts\ Vmstd}{PsVsAn\ 0\ (1-Bws)} = \frac{0.09450 \times 548 \times 39.434}{29.90 \times 30.199 \times 0.0003899 \times (0.9886)}$$
$$I = \boxed{108.3\%}$$

HER-172-2

Plant Hercules, Inc.
Location Hattiesburg, #172
Operator DJM/JMW
Date May 18, 1988
Run no. #2
Sample box no 002

Meter box no 001
Meter H@ 1.83
C factor 1.11
Pilot tube coefficient, Cp 0.84

Ambient temperature 85 F
Barometric pressure 29.89
Assumed moisture, % 5%
Probe length, (ft) 6
Nozzle identification no .250
Average calibrated nozzle diameter, cm (in) 0.845
Probe heater setting 60
Leak rate m³/min, (cfm) 0
Probe liner material SS
Static pressure, mm. Hg (in. Hg) 29.90
Filter No.

SCHEMATIC OF STACK CROSS SECTION

Start Time: 1402 hrs

End Time: 1553 hrs

T.P #	Sample time (min)	Vacuum (in. Hg)	Stack temp. (F) (Ts)	Velocity head (in) (p)	Pressure differ across orific meter	Gas sample volume (cf)	Gas Sample temp. @ dry gas meter Inlet (F)	Gas Sample temp. @ dry gas meter Outlet (F)	Filter holder temp. (F)	Temp. of gas leaving condenser or last impinger (F)
Initial						310.080				
1	4 min	0.5	93	.130	0.60	311.77	92	92	235	< 65
2	4 min	1.0	88	.160	0.75	313.66	96	93	250	< 65
3	4 min	1.0	85	.200	0.95	315.76	100	94	245	< 65
4	4 min	2.0	86	.210	1.00	318.02	104	94	250	< 65
5	4 min	2.0	87	.270	1.25	320.45	108	96	245	< 65
6	4 min	2.5	90	.300	1.40	323.02	110	96	245	< 65
7	4 min	3.0	90	.360	1.70	325.71	111	97	250	< 65
8	4 min	3.5	90	.370	1.72	328.57	112	98	250	< 65
9	4 min	1.0	86	.140	0.65	330.17	96	96	250	< 65
10	4 min	1.0	87	.200	0.95	332.23	99	97	250	< 65
11	4 min	2.0	87	.200	0.95	334.43	103	98	250	< 65
12	4 min	2.0	90	.270	1.25	336.70	108	98	245	< 65
13	4 min	2.5	89	.290	1.35	339.20	112	99	240	< 65
14	4 min	2.5	90	.330	1.52	341.81	114	100	250	< 65
15	4 min	3.0	91	.360	1.70	344.54	117	101	250	< 65
16	4 min	3.0	91	.330	1.52	347.280	118	102	250	< 65
17										
18										
19										
20										
21										
22										
23										
24										
T.			1420	4.18	19.26	37.2	1700	1581	3955	
Avg.			89	86	1.20	37.200	106	97	247	
			549 R				562 R			

HER-172-2

BONNER ANALYTICAL TESTING COMPANY
RT. 13, BOX 85
HATTIESBURG, MS. 39401
(601)264-2854

NOMOGRAPH DATA

PLANT Hercules, Inc.

DATE 8/18/88

SAMPLING LOCATION Silica Dryer

RUN #2

CALIBRATED PRESSURE DIFFERENTIAL ACROSS ORIFICE, in. H_2O	$H_@$	1.83
AVERAGE METER TEMPERATURE (85 + 30 F) F	$T_{m\ avg.}$	115 F
PERCENT MOISTURE IN GAS STREAM BY VOLUME	B_{wo}	5%
BAROMETRIC PRESSURE AT METER, in. Hg	P_m	29.89
STATIC PRESSURE IN STACK, in. Hg (P_s = P_m + 0.073 x STACK GUAGE PRESSURE in in. H_2O; 29.89 + (.073)(.11) = 29.90)	P_s	29.90
RATIO OF STATIC PRESSURE TO METER PRESSURE	P_s / P_m	1.00
AVERAGE STACK TEMPERATURE, F	$T_{s\ avg.}$	90
AVERAGE VELOCITY HEAD, in. H_2O	$\Delta p_{avg.}$	.30
MAXIMUM VELOCITY HEAD, in. H_2O	$\Delta p_{avg.}$	.45
C FACTOR		1.11
CALCULATED NOZZLE DIAMRTER, in.		.270
ACTUAL NOZZLE DIAMETER, in.		.250
REFERENCE Δp, in. H_2O		.40

HER-172-2

1. Summary of Field Data

Run #2

1. Ambient Temperature (F): 85 F
2. Weather: Clear
3. Stack Height (ft): 48 ft.
4. Stack Area (ft): 0.785 ft.
5. Meter H@: 1.83
6. Pitot Correction Factor: 0.84
7. Nomograph C_f : 1.11
8. Probe Heater Setting: 60%
9. Filter Box Temperature (F): 247
10. Last Impinger Temperature (F): < 65
11. Sample Time/Point: 4 min.
12. Points/Traverse: 16 Total
13. Probe Length: 6 ft.
14. Nozzle Diameter: 0.246
15. V : 37.200
16. Pbar: 29.89
17. Pavg: 0.26
18. $Pavg^{.5}$: 0.509
19. Havg: 1.20
20. Tsavg (F): 89
21. Tsavg (R): 549
22. TmIavg (F): 106
23. TmOavg (F): 97
24. Tmavg (F): 102
25. Tmavg (R): 562
26. Pm: 29.89
27. Ps: 29.30
28. V : 8.32 ml

HER-172-2

3. Impinger Data

	1st	2nd	3rd	4th
Final	100	100	0	208.32
Initial	100	100	0	200.00
Difference	0	0	0	8.32
			Total difference	8.32

4. Fyrite Data

Run #1

% Carbon Dioxide = 0, 0, 0

% Oxygen 21.2, 21.2, 21.2

% Carbon Monoxide =

Excess Air (ea) = $(\%O_2) - 0.5\,(\%CO)/0.264\,(\%N_2) - (\%O_2) + 0.5\,(\%CO)$

=

$M_d - 0.44\,(\%CO_2) + 0.32\,(O_2) + 0.28\,(\%N_2 + \%CO)$

$= (0.44 \times 0) + 0.32\,(21.2 + .28)(79.8)$

$= 29.13$

$M_s = M_d\,(1-B_{wo}) + 18(B_{wo})$

$= 29.13(0.9886)18(0.0114)$

$M_s = 29.00$

5. Filter Data

Run #2

	Filter	H O Fraction	Acetone Fraction	Acetone Blank	Filter Blank
Final wt	0.8878		87.9118	92.7644	0.7369
Initial wt	0.7730		87.8564	92.7641	0.7369
Difference	0.1118		0.0559	0.0003	0.0000
Corr.	0.0000		- 0.0003		
Sample wt	0.1118		0.0551		

Total weight 0.1669

HER-172-2

Run No. #2

1. Average Dry Gas Meter Temperature: (F)
   Have =
   Pave =

2. Dry Gas Volume:
   $$Vmstd = 17.64 * Vm * Y \left(\frac{Pbar + H/13.6}{Tm}\right) = 17.64 \times 37.200 \times 1.05 \times \left(\frac{29.98}{562}\right)$$

   = 36.754

3. Volume of water Vapor:
   Vwstd = 0.04707 ft3/ml * Vlc = 0.04707 X 8.32

   = 0.3916

4. Moisture Content:
   $$Bwo = \frac{Vwstd}{Vwstd + Vmstd} = \frac{0.3916}{0.3916 + 36.754}$$

   = 0.0105 or 1.05%

5. Concentration in gr/SCF:
   $$C's = (0.0154\ gr/mg)\ (Mn/Vmstd) = 0.0154 \times \frac{165.9}{36.754}$$

   = 0.0699

6. Concentration in lb/ft3:
   $$Cs = 2.205 \times 10\text{-}6\ (Mn/Vmstd) = 2.205 \times 10^{-6} \times \frac{166.9}{36.754}$$

   = 1.001×10^{-5}

7. Stack Gas Velocity:
   $$Vsavg. = (85.49)(Cp)(Pavg)\left(\frac{Ts\ avg}{PsMs}\right)^{.5} = 85.49 \times 0.84 \times 0.509 \left(\frac{549}{29.90 \times 29.00}\right)^{.5}$$

   = 29.08

8. Stack Gas Volumetric Flowrate:
   $$Qs = 3600(1-Bws)(Vs)(A)\frac{Tstd}{Tsavg}\frac{Ps}{Pstd} = 3600 \times 0.989 \times 29.08 \times 0.785 \times 528 \times \frac{29.90}{(549)(29.92)}$$

   = 78154

9. Pollutant Mass Emission Rate, lb/hr:
   $$PMRc = (Qs)\ (Cs) = 1.001 \times 10^{-5} \times 78154$$

   = 0.782

10. Percent Isokinetic:
    $$I = (0.09450)\frac{Ts\ Vmstd}{PsVsAn\ 0\ (1-Bws)} = \frac{0.09450 \times 549 \times 36.754}{29.90 \times 29.08 \times 0.0003299 \times 64 \times 9.9895}$$

    I = 105%

HER-172-3

Plant Hercules, Inc.
Location Hattiesburg 172 & 3
Operator DJM/JMW
Date May 18, 1988
Run no. #3
Sample box no 001

Meter box no 001
Meter H@ 1.83
C factor 1.11
Pilot tube coefficient, Cp 0.84

Ambient temperature 88 F
Barometric pressure 29.89
Assumed moisture, % 5%
Probe length, (ft) 6
Nozzle identification no .250
Average calibrated nozzle diameter, cm (in) .250
Probe heater setting 60
Leak rate m³/min, (cfm) 0
Probe liner material SS
Static pressure, mm Hg (in. Hg) 29.90
Filter No. May 3

SCHEMATIC OF STACK CROSS SECTION

Start Time: 1618 hrs

End Time: 1726 hrs

T.P #	Sample time (min)	Vacuum (in. Hg)	Stack temp. (F) (Ts)	Velocity head (in) (p)	Pressure differ across orific meter	Gas sample volume (cf)	Gas Sample temp. @ dry gas meter Inlet (F)	Gas Sample temp. @ dry gas meter Outlet (F)	Filter holder temp. (F)	Temp. of gas leaving condenser or last impinger (F)
Initial						347.342				
1	4 min	1.0	82	.140	0.67	349.11	95	98	250	< 65
2	4 min	1.0	84	.150	0.70	350.98	102	98	245	< 65
3	4 min	1.5	87	.170	0.80	352.93	104	99	250	< 65
4	4 min	2.0	89	.200	0.95	355.05	105	99	250	< 65
5	4 min	2.5	89	.250	1.20	357.45	107	99	250	< 65
6	4 min	3.0	90	.300	1.42	360.05	110	100	235	< 65
7	4 min	4.0	89	.340	1.60	362.82	114	100	240	< 65
8	4 min	4.5	89	.350	1.65	365.52	115	101	240	< 65
9	4 min	2.0	88	.170	0.80	367.43	104	99	245	< 65
10	4 min	2.0	84	.190	0.90	369.52	105	100	250	< 65
11	4 min	2.0	87	.230	1.10	371.79	106	100	250	< 65
12	4 min	3.0	89	.280	1.33	374.23	107	100	250	< 65
13	4 min	3.5	89	.320	1.52	376.80	109	101	240	< 65
14	4 min	4.0	89	.340	1.60	379.50	110	101	245	< 65
15	4 min	4.0	89	.360	1.70	382.28	113	102	250	< 65
16	4 min	4.5	88	.310	1.45	385.143	116	102	250	< 65
17										
18										
19										
20										
21										
22										
23										
24										
T.			1402	4.1	19.39	37.801	1622	1589	3940	
Avg.			88	0.36	1.212	37.801	101	100	246	
			548 R				561 R			

MER-172-3

BONNER ANALYTICAL TESTING COMPANY
RT. 13, BOX 85
HATTIESBURG, MS. 39401
(601)264-2854

NOMOGRAPH DATA

PLANT Hercules, Inc.

DATE 5/18/88

SAMPLING LOCATION Silica Dryer

RUN #3

CALIBRATED PRESSURE DIFFERENTIAL ACROSS ORIFICE, in. H O	ΔH @	1.83
AVERAGE METER TEMPERATURE (68 + 30 F) F	T_m avg.	128 F
PERCENT MOISTURE IN GAS STREAM BY VOLUME	B_{wo}	5%
BAROMETRIC PRESSURE AT METER, in. Hg	P_m	29.89
STATIC PRESSURE IN STACK, in. Hg (P_m +0.073 x STACK GUAGE PRESSURE in in. H O; 29.89 + (.073)(.11))	P_s	29.90
RATIO OF STATIC PRESSURE TO METER PRESSURE	P_s / P_m	1.00
AVERAGE STACK TEMPERATURE, F	T_s avg.	89
AVERAGE VELOCITY HEAD, in. H O	Δp avg.	.28
MAXIMUM VELOCITY HEAD, in. H O	Δp avg.	.40
C FACTOR	1.11	
CALCULATED NOZZLE DIAMRTER, in.	.266	
ACTUAL NOZZLE DIAMETER, in.	.250	
REFERENCE Δp, in. H O	.39	

HER-172-3

1. Summary of Field Data

Run #3

1. Ambient Temperature (F): 88 F

2. Weather: Clear

3. Stack Height (ft): 48 ft.

4. Stack Area (ft): 0.785 ft.

5. Meter H@: 1.83

6. Pitot Correction Factor: 0.84

7. Nomograph C_f : 1.11

8. Probe Heater Setting: 50%

9. Filter Box Temperature (F): 246

10. Last Impinger Temperature (F): < 65

11. Sample Time/Point: 4 min.

12. Points/Traverse: 16 Total

13. Probe Length: 6 ft.

14. Nozzle Diameter: 0.246

15. V : 37.801

16. Pbar: 29.89

17. Pavg: 0.26

18. $Pavg^{.5}$: 0.509

19. Havg: 1.21

20. Tsavg (F): 88

21. Tsavg (R): 548

22. TmIavg (F): 101

23. TmOavg (F): 100

24. Tmavg (F): 101

25. Tmavg (R): 561

26. Pm: 29.89

27. Ps: 29.90

3. Impinger Data

	1st	2nd	3rd	4th
Final	100	100		209.56
Initial	100	100		200.00
Difference	0	0		9.56
			Total difference	9.56

4. Fyrite Data

Run #1

% Carbon Dioxide = 0, 0, 0

% Oxygen 21.2, 21.2, 21.2

% Carbon Monoxide =

$$\text{Excess Air (ea)} = (\%O_2) - 0.5\,(\%CO)/0.264\,(\%N_2) - (\%O_2) + 0.5\,(\%CO)$$

=

$$M_d - 0.44\,(\%CO) + 0.32\,(O_2) + 0.28\,(\%N_2 + \%CO)$$

$$= (0.44 \times 0) + 0.32\,(21.2 + .28)(79.8)$$
$$= 29.13$$

$$M_s = M_d\,(1-B_{wo}) + 18(B_{wo})$$
$$= 29.13(0.9886)18(0.0114)$$

$$M_s = 29.00$$

5. Filter Data

Run #2

	Filter	H O Fraction	Acetone Fraction	Acetone Blank	Filter Blank
Final wt	0.8496		87.2227	92.7644	0.7369
Initial wt	0.7605		87.1002	92.7641	0.7369
Difference	0.0891		0.1225	0.0003	0.0000
Corr.	0.0000		- 0.0003		
Sample wt	0.0891		0.1222		

Total weight 0.2113

HER-172-3

Run No. #3

1. Average Dry Gas Meter Temperature: (F)
   Have =
   Pave =

2. Dry Gas Volume:

$$Vmstd = 17.64 * Vm * Y \left(\frac{Pbar + H/13.6}{Tm}\right) = 17.64 \times 37.801 \times 1.05 \times \left(\frac{29.69 \times \frac{13.6}{13.6}}{562}\right)$$

$$= \boxed{37.415}$$

3. Volume of water Vapor:
   Vwstd = 0.04707 ft3/ml * Vlc = 0.04707 X 9.56

   = !0.4499!

4. Moisture Content:

$$Bwo = \frac{Vwstd}{Vwstd + Vmstd} = \frac{0.4499}{0.4499 + 37.415}$$

   = !0.0119 or 1.19%!

5. Concentration in gr/SCF:
   C's = (0.0154 gr/mg) (Mn/Vmstd) = 0.0154 X $\frac{211.3}{37.415}$

   =!0.0870!

6. Concentration in lb/ft3:
   Cs = 2.205 x 10-6 (Mn/Vmstd) = $2.205 \times 10^{-6} \times \frac{211.3}{37.415}$

   =!1.245 X 10^{-5}!

7. Stack Gas Velocity:

$$Vsavg.=(85.49)(Cp)(Pavg)\left(\frac{Ts\ avg}{PsMs}\right)^{.5} = 85.49 \times 0.84 \times 0.509 \left(\frac{561}{29.90 \times 29.00}\right)^{.5}$$

   =!29.400!

8. Stack Gas Volumetric Flowrate:

$$Qs=3600(1-Bws)(Vs)(A)\frac{Tstd}{Tsavg}\frac{Ps}{Pstd} = 3600 \times .9881 \times 29.400 \times 0.785 \times 528 \left(\frac{29.90}{561}\right)\left(\frac{29.92}{29.92}\right)$$

   =! 77214.9!

9. Pollutant Mass Emission Rate, lb/hr:

$$PMRc = (Qs)(Cs) = 1.245 \times 10^{-5} \times 77214.9 = \boxed{0.9613}$$

10. Percent Isokinetic:

$$I = (0.09450)\frac{Ts\ Vmstd}{PsVsAn\ 0\ (1-Bws)} = \frac{0.09450 \times 561 \times 37.415}{29.90 \times 29.400 \times 0.0003899 \times 64 \times 0.9881}$$

   I = !108.1%!

RUN #1

Plant: Hercules, Inc.
Location: Hattiesburg #172
Operator: D.M. JW
Date: 18 May 88
Run no. ___ #
Sample box no: 007

Meter box no: 001
Meter H@: 1.83
C factor: 1.10
Pilot tube coefficient, Cp: 0.84

Ambient temperature: 80°F
Barometric pressure: 29.89
Assumed moisture, %: 5%
Probe length, (ft): 6
Nozzle identification no: .250
Average calibrated nozzle diameter, cm (in): .250 in
Probe heater setting: 60
Leak rate m³/min, (cfm): 0
Probe liner material: SS
Static pressure, mm. Hg (in. Hg): 29.90
Filter No.:

SCHEMATIC OF STACK CROSS SECTION

Start Time: 1109 hrs ✓ End Time: 1223 hrs ✓

T.P #	Sample time (min)	Vacuum (in. Hg)	Stack temp. (°F) (Ts)	Velocity head (in) (Δp)	Pressure differ across orific meter	Gas sample volume (cf)	Gas Sample temp. @ dry gas meter Inlet (°F)	Gas Sample temp. @ dry gas meter Outlet (°F)	Filter holder temp. (°F)	Temp. of gas leaving condenser or last impinger (°F)
Initial						270.201				
1	4 min	1.0	85	.180	0.90	272.92	92	90	250	<65
2	4 min	1.0	85	.200	0.95	275.15	98	92	250	<65
3	4 min	2.0	87	.220	1.00	277.26	100	92	250	<65
4	4 min	2.0	88	.240	1.10	279.44	102	93	245	<65
5	4 min	3.0	94	.300	1.40	281.88	106	94	245	<65
6	4 min	3.0	95	.310	1.45	284.46	109	96	245	<65
7	4 min	3.0	91	.360	1.70	287.18	112	96	240	<65
8	4 min	3.5	91	.370	1.72	290.01	114	98	245	<65
9	4 min	2.0	80	.200	0.95	292.04	100	98	245	<65
10	4 min	2.0	80	.210	0.97	294.23	101	98	235	<65
11	4 min	2.0	89	.230	1.05	296.51	104	98	240	<65
12	4 min	2.5	90	.300	1.40	299.06	105	98	240	<65
13	4 min	3.0	91	.350	1.60	301.74	110	98	240	<65
14	4 min	3.0	91	.370	1.72	304.52	114	100	250	<65
15	4 min	4.0	92	.330	1.50	307.34	115	101	240	<65
16	4 min	4.0	90	.330	1.50	310.032	118	102	240	<65
17										
18										
19										
20										
21										
22										
23										
24										
24										
T.			1409	4.5	20.9	39.831	1700	1544	2920	
Avg			88	.28	1.31	39.831	106	96	244	

548.06R
548R

561.375R

BONNER ANALYTICAL TESTING COMPANY
RT. 13, BOX 85
HATTIESBURG, MS. 39401
(601)264-2854

NOMOGRAPH DATA

PLANT Hercules

DATE 05/18/88

SAMPLING LOCATION Silica dryer

Run 1

CALIBRATED PRESSURE DIFFERENTIAL ACROSS ORIFICE, in. H_2O	$H_@$	1.83
AVERAGE METER TEMPERATURE (AMBIENT + 30 f), F	T_m avg.	120°F
PERCENT MOISTURE IN GAS STREAM BY VOLUME	B_{wo}	5%
BAROMETRIC PRESSURE AT METER, in. Hg	P_m	29.89
STATIC PRESSURE IN STACK, in. Hg (P_m ±0.073 x STACK GUAGE PRESSURE in in. H_2O) 29.89 + (.073)(.11)	P_s	29.90
RATIO OF STATIC PRESSURE TO METER PRESSURE P_s/P_{bar}	s_{P_m}	1.000
AVERAGE STACK TEMPERATURE, F	T_s avg.	86
AVERAGE VELOCITY HEAD, in. H_2O ΔP	P avg.	.30
MAXIMUM VELOCITY HEAD, in. H_2O ΔP_{Max}	P avg.	.45
A FACTOR		1.10
CALCULATED NOZZLE DIAMRTER, in.		.270
ACTUAL NOZZLE DIAMETER, in.		.250
REFERENCE p, in. H_2O		.40

Run #1

1. Summary of Field Data

Run

1. Ambient Temperature (F): 80 °f
2. Weather: Clear.
3. Stack Height (ft): ~~0.785~~ 48ft
4. Stack Area (ft): 0.785 ft^2
5. Meter H@: 1.83
6. Pitot Correction Factor: 0.84
7. Nomograph C_f : ~~0.40~~ 1.10
8. Probe Heater Setting: 60%
9. Filter Box Temperature (F): ≥ 225
10. Last Impinger Temperature (F): < 65
11. Sample Time/Point: 4 min
12. Points/Traverse: 16 Total
13. Probe Length: 6
14. Nozzle Diameter: 0.246
15. V_m: 39.831
16. Pbar: 29.89
17. ΔP_{avg}: 0.28
18. $\overline{\Delta P_{avg}}^{.5}$: 0.529
19. $\overline{\Delta H}_{avg}$: 1.31
20. Tsavg (F): ~~101~~ 88
21. Tsavg (R): ~~561~~ 548
22. TmIavg (F): 106
23. TmOavg (F): 96
24. Tmavg (F): 101
25. Tmavg (R): 561

26. Pm: 29.89

27. Ps: 29.90

28. Vlc: 9.73 mL

3. Impinger Data

Final	100	100	0	209.73 ~~210.5~~
Initial	100	100	0	200
Difference	0	0	0	9.73
			Total difference	9.73

4. Fyrite Data

Run

% Carbon Dioxide = 0, 0, 0

% Oxygen = 21.2, 21.2 21.2

% Carbon Monoxide =

Excess Air (ea) = $(\%O_2) - 0.5(\%CO)/0.264(\%N_2) - (\%o_2) + 0.5(\%CO)$

=

$M_d - 0.44(\%CO_2) + 0.32(O_2) + 0.28(\%N_2 + \%CO)$

$= (0.44*0)^2 + 0.32(21.2^2) + .28(79.8)$

≈ 29.13

$M_s = M_d(1-B_{wo}) + 18(B_{wo})$

$= 29.13(98.86)\ 18(0.0114)$

$M_s = 29.00$

H8R 172-1

5. Filter Data

Run

	Filter #2	H O Fraction	Acetone Fraction	Acetone Blank	Filter Blank
Final wt	1.9905		89.2466	92.7644	0.7369
Initial wt	.7610		89.1007	92.7641	0.7369
Difference	1.2295		0.1459	0.0003	.0000
Corr.	0000		-0.0003		
Sample wt	1.2295		0.1456		
Total weignt			1.3751		

Run No. #1

1. Average Dry Gas Meter Temperature:
   Average Orifice Pressure Drop:
   Average H@:

2. Dry Gas Volume:

$$Vmstd = 17.64 * Vm * Y \left(\frac{Pbar + \Delta H/13.6}{Tm}\right) = 17.64 * 39.831 * 1.05 * \left(\frac{29.89 + \frac{1.31}{13.6}}{561}\right)$$

$= 39.434$

3. Volume of water Vapor:

$Vwstd = 0.04707$ ft3/ml $* Vlc = 0.04707 * 9.73$

$= 0.458$

4. Moisture Content:

$$Bwo = \frac{Vwstd}{Vwstd + Vmstd} = \frac{0.458}{0.458 + 39.434}$$

$= 0.0114$ or 1.14%

5. Concentration in gr/SCF:

$C's = (0.0154$ gr/mg$)(Mn/Vmstd) = 0.0154 * \frac{1375.1}{39.434} = 0.537$

$= 0.537$

6. Concentration in lb/ft3:

$Cs = 2.205 \times 10\text{-}6\ (Mn/Vmstd) = 2.205 * 10^{-6} * \frac{1375.1}{39.434}$

$= 7.689 * 10^{-5}$

7. Stack Gas Velocity:

$$Vsavg. = (85.49)(Cp)(\Delta Pavg)\left(\frac{Ts\ avg}{PsMs}\right)^{.5} = 85.49 * 0.84 * 0.529 \left(\frac{548}{29.90 \text{ } 29.00}\right)^{.5}$$

$= 30.199$

8. Stack Gas Volumetric Flowrate:

$$Qs = 3600\ (1-Bws)\ (Vs)\ (A)\ \frac{Tstd}{Tsavg}\ \frac{Ps}{Pstd} = (3600)(.9886)(30.199)(0.785)\left(\frac{528}{548}\right)\left(\frac{29.}{29.9}\right)$$

$= 81235$

9. Pollutant Mass Emission Rate, lb/hr:

$PMRc = (Qs)(Cs) = 81235 * 7.689 * 10^{-5}$

$= 6.246$

10. Percent Isokinetic:

$$I = (0.09450)\ \frac{Ts\ Vmstd}{PsVsAn\ (1-Bws)} = \frac{0.09450 * 548 * 39.434}{29.90 * 30.199 * 0.0003299 * (.9886)}$$

$I = 108.3\%$

RUN #2

Plant: Hercules, Inc.
Location: Hattiesburg (silica dryer)
Operator: DM/JW
Date: 18 May 88
Run no.: #2
Sample box no: 002

Meter box no: 001
Meter H@: 1.83
C factor: 1.11
Pilot tube coefficient, Cp: 0.84

Ambient temperature: 85
Barometric pressure: 29.89
Assumed moisture, %: 5%
Probe length, (ft): 6
Nozzle identification no: .250
Average calibrated nozzle diameter, cm (in): .250 0.246
Probe heater setting: 60
Leak rate m³/min, (cfm): 0
Probe liner material: SS
Static pressure, mm. Hg (in. Hg): 29.90
Filter No.:

SCHEMATIC OF STACK CROSS SECTION

Start Time: 1402 hrs

End Time: 1553 hrs

T.P #	Sample time (min)	Vacuum (in. Hg)	Stack temp. (°F) (Ts)	Velocity head (in) (p)	Pressure differ across orific meter	Gas sample volume (cf)	Gas Sample temp. @ dry gas meter Inlet (°F)	Gas Sample temp. @ dry gas meter Outlet (°F)	Filter holder temp. (°F)	Temp. of gas leaving condenser or last impinger (°F)
Initial			✓	✓	✓	310.080	✓	✓	✓	
1	4 min	0.5	93	.130	.60	311.77	92	92	235	<65
2	4 min	1.0	88	.160	.75	313.66	96	93	250	<65
3	4 min	1.0	85	.200	.95	315.76	100	94	245	<65
4	4 min	2.0	86	.210	1.00	318.02	104	94	250	<65
5	4 min	2.0	87	.270	1.25	320.45	108	96	245	<65
6	4 min	2.5	90	.300	1.40	323.02	110	96	245	<65
7	4 min	3.0	90	.360	1.70	325.71	111	97	250	<65
8	4 min	3.5	90	.370	1.72	328.57	112	98	250	<65
9	4 min	1.0	86	.140	.65	330.17	96	96	250	<65
10	4 min	1.0	87	.200	.95	332.23	99	97	250	<65
11	4 min	2.0	87	.200	.95	334.43	103	98	250	<65
12	4 min	2.0	90	.270	1.25	336.70	108	98	245	<65
13	4 min	2.5	89	.290	1.35	339.20	112	99	240	<65
14	4 min	2.5	90	.330	1.52	341.81	114	100	250	<65
15	4 min	3.0	91	.360	1.70	344.54	117	101	250	<65
→ 16	4 min	3.0	91	.330	1.52	347.280	118	102	250	<65
17										
18										
19										
20										
21										
22										
23										
24										
24										
T.			1420	4.12	19.26	37.2	1700	153	3955	
Avg			89.5	0.26	1.20	37.200	106.5	99.75	247.7	

Note: lost power at 1450 between 1st and 2nd half of 2nd run
-restored power 1515 + resumed 2nd run 03

~~449~~ R

562 R

172-2
XXL

BONNER ANALYTICAL TESTING COMPANY
RT. 13, BOX 85
HATTIESBURG, MS. 39401
(601)264-2854

NOMOGRAPH DATA

PLANT Hercules, Inc.

DATE 18 May 88

SAMPLING LOCATION Silica dryer
Run #2

CALIBRATED PRESSURE DIFFERENTIAL ACROSS ORIFICE, in. H O	H @	1.83
AVERAGE METER TEMPERATURE (AMBIENT + 2- f), F 85 + 30	T m avg.	~~105~~ 115
PERCENT MOISTURE IN GAS STREAM BY VOLUME	B wo	5%
BAROMETRIC PRESSURE AT METER, in. Hg	P m	29.89
STATIC PRESSURE IN STACK, in. Hg (P + 0.073 x STACK GUAGE PRESSURE in in. H O m 2	P s	29.90
RATIO OF STATIC PRESSURE TO METER PRESSURE	s P m	1.00
AVERAGE STACK TEMPERATURE, F	T s avg.	90
AVERAGE VELOCITY HEAD, in. H O 2	P avg.	.30
MAXIMUM VELOCITY HEAD, in. H O 2	P avg.	.45
A FACTOR		1.11
CALCULATED NOZZLE DIAMRTER, in.		.270
ACTUAL NOZZLE DIAMETER, in.		.250
REFERENCE p, in. H O 2		.40

#6 R, M2-2

1. Summary of Field Data

Run

1. Ambient Temperature (F): 85
2. Weather: Clear
3. Stack Height (ft): 48
4. Stack Area (ft): 0.785
5. Meter H@: 1.83
6. Pitot Correction Factor: 0.84
7. Nomograph C_f : 1.11
8. Probe Heater Setting: 60 %
9. Filter Box Temperature (F): 247
10. Last Impinger Temperature (F): <65
11. Sample Time/Point: 4
12. Points/Traverse: 16 Total
13. Probe Length: 6ft
14. Nozzle Diameter: 0.246
15. V_m: 37.200
16. Pbar: 29.89
17. ΔP_{avg}: 0.26
18. $\Delta P_{avg}^{.5}$: 0.509
19. ΔH_{avg}: 1.20
20. Tsavg (F): 89
21. Tsavg (R): 549
22. TmIavg (F): 106
23. TmOavg (F): 97
24. Tmavg (F): ~~102~~ 102
25. Tmavg (R): 562

HER-172-2

26. Pm: 29.89

27. Ps: 29.30

28. V : 8.32

3. Impinger Data

Final	100	100	0	208.32
Initial	100	100	0	200.00
Difference				8.32
			Total difference	8.32

4. Fyrite Data

Run

% Carbon Dioxide = 0, 0, 0,

% Oxygen = 21.2, 21.2, 21.2

% Carbon Monoxide =

Excess Air (ea) = $(\%O_2) - 0.5\,(\%CO)/0.264\,(\%N_2) - (\%o) + 0.5\,(\%CO)$

=

$M_d - 0.44\,(\%CO_2) + 0.32\,(O_2) + 0.28\,(\%N_2 + \%CO)$

= 29.13

$M_s = M_d\,(1-B_{wo}) + 18(B_{wo})$

= 29.00

HER 172-2

5. Filter Data

Run

	Filter	H O Fraction	Acetone Fraction	Acetone Blank	Filter Blank
Final wt	0.8878		87.9118	92.7644	.7369
Initial wt	0.7730		87.8564	92.7641	.7369
Difference	0.1118		0.0554	0.0003	-0-
Corr.	0.0000		-0.0003		
Sample wt	0.1118		0.0551		
Total weignt			0.1669		

Run No. HER 172-2

1. Average Dry Gas Meter Temperature:
   Average Orifice Pressure Drop:
   Average H@:

2. Dry Gas Volume:

$$Vmstd = 17.64 * Vm * Y \left(\frac{Pbar + H/13.6}{Tm}\right) \quad (17.64)(37.200)(1.05)\left(\frac{29.98}{562}\right)$$

$= 36.754$

3. Volume of water Vapor:
   $Vwstd = 0.04707\ ft3/ml * Vlc \quad 0.04707 * 8.32$

$= 0.3916$

4. Moisture Content:

$$Bwo = \frac{Vwstd}{Vwstd + Vmstd} = \frac{0.3916}{0.3916 + 36.754}$$

$= 0.0105$ or 1.05%

5. Concentration in gr/SCF:
   $C's = (0.0154\ gr/mg)\ (Mn/Vmstd) = 0.0154 * \frac{166.9}{36.754}$

$= 0.0699$

6. Concentration in lb/ft3:
   $Cs = 2.205 \times 10{-}6\ (Mn/Vmstd) = 2.205 * 10^{-6} * \frac{166.9}{36.754}$

$= 1.001 * 10^{-5}$

7. Stack Gas Velocity:

$$Vsavg. = (85.49)(Cp)(Pavg)\left(\frac{Ts\ avg}{PsMs}\right)^{.5} \quad (85.49)(0.84)(0.509)\left(\frac{549}{29.90 * 29.00}\right)^{.5}$$

$= 29.08$

8. Stack Gas Volumetric Flowrate:

$$Qs = 3600\ (1-Bws)\ (Vs)\ (A)\ \frac{Tstd}{Tsavg}\ \frac{Ps}{Pstd} = \frac{3600 * 0.9895 * 29.08 * 0.785 * 528}{(549)\ 29.92}$$

$= 78154$

9. Pollutant Mass Emission Rate, lb/hr:
   $PMRc = (Qs)\ (Cs) = 1.001 * 10^{-5} * 78154$

$= 0.782$

10. Percent Isokinetic:

$$I = (0.09450)\ \frac{Ts\ Vmstd}{PsVsAn \Phi\ (1-Bws)} = \frac{(0.09450)(549)(36.754)}{(29.90)(29.08)(0.003249)(64)(0.9895)}$$

$= 105\%$

RUN # 3

Plant: Hercules, Inc
Location: Hattiesburg (silica dryer)
Operator: DM/JW 172+3
Date: 18 May '88
Run no.: #3
Sample box no: 001

Meter box no: 001
Meter H@: 1.83
C factor: 1.11
Pilot tube coefficient, Cp: 0.84

Ambient temperature: 88
Barometric pressure: 29.89
Assumed moisture, %: 5
Probe length, (ft): 6
Nozzle identification no: .250
Average calibrated nozzle diameter, cm (in): .250
Probe heater setting: 60
Leak rate m³/min, (cfm): 0
Probe liner material: SS
Static pressure, mm. Hg (in. Hg): 29.90
Filter No.: MAY3

SCHEMATIC OF STACK CROSS SECTION

Start Time: 1618 hrs

End Time: ~~1726~~ 1776 hrs

T.R #	Sample time (min)	Vacuum (in. Hg)	Stack temp. (F) (Ts) ✓	Velocity head (in) (p) ✓	Pressure differ across orific meter ✓	Gas sample volume (cf) ✓	Gas Sample temp. @ dry gas meter Inlet (F) ✓	Gas Sample temp. @ dry gas meter Outlet (F) ✓	Filter holder temp. (F) ✓	Temp. of gas leaving condenser or last impinger (F)
Initial						347.342				
1	4 min	1.0	82	.140	.67	349.11	95	98	250	<65
2	4 min	1.0	84	.150	.70	350.98	102	98	245	<65
3	4 min	1.5	87	.170	.80	352.93	104	99	250	<65
4	4 min	2.0	89	.200	.95	355.05	105	99	250	<65
5	4 min	2.5	89	.250	1.20	357.45	107	99	250	<65
6	4 min	3.0	90	.300	1.42	360.05	110	100	235	<65
7	4 min	4.0	89	.340	1.60	362.82	114	100	240	<65
8	4 min	4.5	89	.350	1.65	365.52	115	101	240	<65
9	4 min	2.0	88	.170	.80	367.43	104	99	245	<65
10	4 min	2.0	84	.190	.90	369.52	105	100	250	<65
11	4 min	2.0	87	.230	1.10	371.79	106	100	250	<65
12	4 min	3.0	89	.280	1.33	374.23	107	100	250	<65
13	4 min	3.5	89	.320	1.52	376.80	109	101	240	<65
14	4 min	4.0	89	.340	1.60	379.50	110	101	245	<65
15	4 min	4.0	89	.360	1.70	382.28	113	102	250	<65
16	4 min	4.5	88	.310	1.45	385.143	116	102	250	<65
17										
18										
19										
20										
21										
22										
23										
24										
24										
T.			1402	4.1	19.39	37.801	1622	1599	3940	
Avg			88	0.26	1.212		101	100	246	<65

548 R

100
560 R

H&R 172-3

BONNER ANALYTICAL TESTING COMPANY
RT. 13, BOX 85
HATTIESBURG, MS. 39401
(601)264-2854

NOMOGRAPH DATA

PLANT Hercules, Inc

DATE 18 May 86

SAMPLING LOCATION Silica Dryer
Run #3

CALIBRATED PRESSURE DIFFERENTIAL ACROSS ORIFICE, in. H 2O	H @	1.83
AVERAGE METER TEMPERATURE (AMBIENT + 30 F), F 88	T m avg.	128
PERCENT MOISTURE IN GAS STREAM BY VOLUME	B wo	5
BAROMETRIC PRESSURE AT METER, in. Hg	P m	29.89
STATIC PRESSURE IN STACK, in. Hg (P_m + 0.073 x STACK GUAGE PRESSURE in in. H_2O)	P s	29.90
RATIO OF STATIC PRESSURE TO METER PRESSURE	s P m	1.00
AVERAGE STACK TEMPERATURE, F	T s avg.	89
AVERAGE VELOCITY HEAD, in. H_2O	P avg.	.28
MAXIMUM VELOCITY HEAD, in. H_2O	P avg.	.40
C FACTOR		1.11
CALCULATED NOZZLE DIAMRTER, in.		.266
ACTUAL NOZZLE DIAMETER, in.		.250
REFERENCE P_1, in. H_2O		.39

#BR122-3

1. Summary of Field Data

Run

1. Ambient Temperature (F): 88
2. Weather: clear
3. Stack Height (ft): 48
4. Stack Area (ft): 0.785
5. Meter H@: 1.83
6. Pitot Correction Factor: 0.84
7. Nomograph C_f : 1.11
8. Probe Heater Setting: 60
9. Filter Box Temperature (F): 246
10. Last Impinger Temperature (F): <65
11. Sample Time/Point: 4
12. Points/Traverse: 16 To 80
13. Probe Length: 6
14. Nozzle Diameter: 0.246
15. V_m: 37.801
16. Pbar: 29.89
17. ΔPavg: 0.26
18. $\Delta Pavg^{.5}$: 0.509
19. ΔHavg: 1.21
20. Tsavg (^{0}F): ~~54~~ 88
21. Tsavg ($^\circ$R): 548
22. TmIavg ($^\circ$F): 101
23. TmOavg ($^\circ$F): 100
24. Tmavg ($^\circ$F): ~~100~~ 101
25. Tmavg ($^\circ$R): 561

HAR-MZ-3 Run #3 Hercules 5/18/00

26. P_m: 29.89

27. P_s: 29.90

28. V_{lc}: 9.56

3. Impinger Data

	1	2	3	4
Final	100	100	–	209.5g
Initial	100	100	–	200g
Difference	0	0	–	
			Total difference	9.56

4. Fyrite Data

Run

% Carbon Dioxide = 0, 0, 0,

% Oxygen = 21.2, 21.2, 21.2

% Carbon Monoxide =

Excess Air (ea) = $(\%O_2) - 0.5(\%CO)/0.264(\%N_2) - (\%o_2) + 0.5(\%CO)$

=

$M_d = 0.44(\%CO_2) + 0.32(O_2) + 0.28(\%N_2 + \%CO)$

= 29.13

$M_s = M_d(1-B_{wo}) + 18(B_{wo})$

M_s = 29.00

172 Run 3 #3 Hercules 5/18/88

5. Filter Data

Run

	Filter MAV3	H O Fraction	Acetone Fraction	Acetone Blank	Filter Blank
Final wt	0.8496	NA	87.2229	92.7644	7369
Initial wt	.7605		87.1002	92.7641	7369
Difference	0.0891		0.1225	0.0003	0
Corr.	0.0000		−0.0003		
Sample wt	0.0891		0.1222		

Total weight 0.2113

Run No. HER172-3

1. Average Dry Gas Meter Temperature:
   Average Orifice Pressure Drop:
   Average H@:

2. Dry Gas Volume:

$$Vmstd = 17.64 * Vm * Y \left(\frac{Pbar + H/13.6}{Tm}\right) \quad 17.64 * 37.801 * 1.05 * \left(\frac{29.84 + \frac{1.21}{13.6}}{561}\right)$$

$= 37.415$

3. Volume of water Vapor:

$Vwstd = 0.04707\ ft3/ml * Vlc = 0.04707 * 9.56$

$= 0.4499$

4. Moisture Content:

$$Bwo = \frac{Vwstd}{Vwstd + Vmstd} \quad \frac{0.4499}{0.4499 + 37.415}$$

$= 0.0119$ or 1.19%

5. Concentration in gm/SCF:

$C's = (0.0154\ gr/mg)\ (Mn/Vmstd) = 0.0154 * \frac{211.3}{37.415}$

$= 0.0870$

6. Concentration in lb/ft3:

$Cs = 2.205 \times 10^{-6}\ (Mn/Vmstd) = 2.205 * 10^{-6} * \frac{211.3}{37.415}$

$= 1.245 * 10^{-5}$

7. Stack Gas Velocity:

$$Vsavg. = (85.49)(Cp)(Pavg)\left(\frac{Ts\ avg}{PsMs}\right)^{.5} = 85.49 * 0.84 * 0.509 * \left(\frac{561}{29.90\ \ 29.00}\right)^{.5}$$

$= 29.400$

8. Stack Gas Volumetric Flowrate:

$$Qs = 3600\ (1-Bws)\ (Vs)\ (A)\ \frac{Tstd}{Tsavg}\ \frac{Ps}{Pstd} \quad (3600)(.9881)(29.400)(0.785)\left(\frac{528}{561}\right)\left(\frac{29.90}{29.92}\right)$$

$= 77214.9$

9. Pollutant Mass Emission Rate, lb/hr:

$PMRc = (Qs)\ (Cs) = (77214.9)(1.245 * 10^{-5})$

$= 0.9613$

10. Percent Isokinetic:

$$I = (0.09450)\ \frac{Ts\ Vmstd}{PsVsAn\ \theta\ (1-Bws)} = \frac{(0.09450)(561)(37.415)}{(29.90)(29.400)(0.000329)(64)(0.9881)}$$

$I = 108.1\%$

BONNER ANALYTICAL TESTING COMPANY
RT. 13, BOX 85
HATTIESBURG, MS. 39401
(601)264-2854

Therometer and Pyrometer Calibration

Date: 05/17/88

Hercules

Temperature (Corrected)	Pyrometer	DGM* Inlet	DGM* Outlet	Last Impinge	Hot Box
60 F	60 F	60 F	60 F	60 F	60 F
110 F	110 F	110 F	110 F	110 F	110 F
125 F	125 F	125 F	125 F	126 F	125 F
200 F	~~200~~ F ok MSB 05/17/88				200 F
300 F	301 F				301 F
500 F	500 F				
750 F	749 F				
800 F	801 F				

DGM* Inlet: Dry Gas Meter, Inlet

DGM* Outlet: Dry Gas Meter, Outlet

$Y = 1.05$

Y = Ratio of reading of wet test meter to dry test meter; tolerance for individual values +0.02 from average.

H@ = Orifice pressure differential that equates to 0.75 cfm of air @ 68 F ; 29.92 inches of mercury, in. H2O; tolerance for individual values +0.20 from average. 1.83

$$Y_C = \frac{10}{V_m}\left[\frac{0.0319\,T_m}{P_{bar}}\right]^{0.5}$$

$$Y_C = \frac{10}{7.144}\left[\frac{0.0319\,(544)}{29.89}\right]^{0.5}$$

$Y_C = 1.07$ $\qquad 0.97Y \le Y_C \le Y\,1.03$

ok 5/17/88 MSB

$$\Delta H = 0.0319\,\Delta H\,\frac{T_m}{P_{bar}} * \frac{\Theta^2}{Y^2 V_m^2}$$

$$0.0319(1.83)\left(\frac{544}{29.89}\right)\frac{(10)^2}{(7.144)^2(1.05)^2}$$

~~$\Delta H_@$~~ 1.88

ok MSB 5/17/88

1.83 $\pm$ 0.2

$T = 10$

$V_m = 7.144$

$T_m = 544$

P_b 29.89

BONNER ANALYTICAL TESTING COMPANY
RT. 13, BOX 85
HATTIESBURG, MS. 39401
(601)264-2854

Probe Nozzle Calibration

05/17/88 OK MSB

Theoretical diameter 0.312 inches

Actual diameter (inches)

	001	002	003	004	005	006
	0.1795	0.2460	0.3050	0.3670	0.4295	0.4930
	0.1790	0.2460	0.3050	0.3670	0.4290	0.4940
	0.1795	0.2465	0.3055	0.3675	0.4300	0.4940
	0.1790	0.2460	0.3050	0.3685	0.4290	0.4945
	0.1790	0.2460	0.3050	0.3670	0.4290	0.4940
	0.1790	0.2460	0.3050	0.3675	0.4295	0.4945
	0.1790	0.2460	0.3050	0.3675	0.4295	0.4940
	0.1795	0.2465	0.3055	0.3680	0.4295	0.4940
AVG.	0.1790	0.2460	0.3050	0.3675	0.4295	0.4940

Field Check

0.2460
0.2465
0.2460
0.2460

MSB OK 5/17/88

BONNER ANALYTICAL TESTING COMPANY
RT. 13, BOX 85
HATTIESBURG, MS. 39401
(601)264-2854

Pitot tube Calibration
Type S
Six foot (6) Pitot Tube

Date: 05/17/88
OK MSB

Point Number	P1		P2(a)		P2(b)		Cp
1	0.08	✓	0.06	✓	0.06	OK	0.87
2	0.10	✓	0.07	✓	0.07		0.84
3	0.25	OK	0.17	OK	0.17		0.83
4	0.47	OK	0.33	OK	0.33		0.84
5	0.55		0.40		0.39		0.84
6	0.71		0.51		0.50		0.84
7	0.87		0.62		0.63		0.85
8	1.30		0.92		0.92		0.84

0.84 OK MSB

P2(a) = A leg of Pitot Tube
P2(b) = B leg of Pitot Tube
Cp = (P2/ P1) 1/2

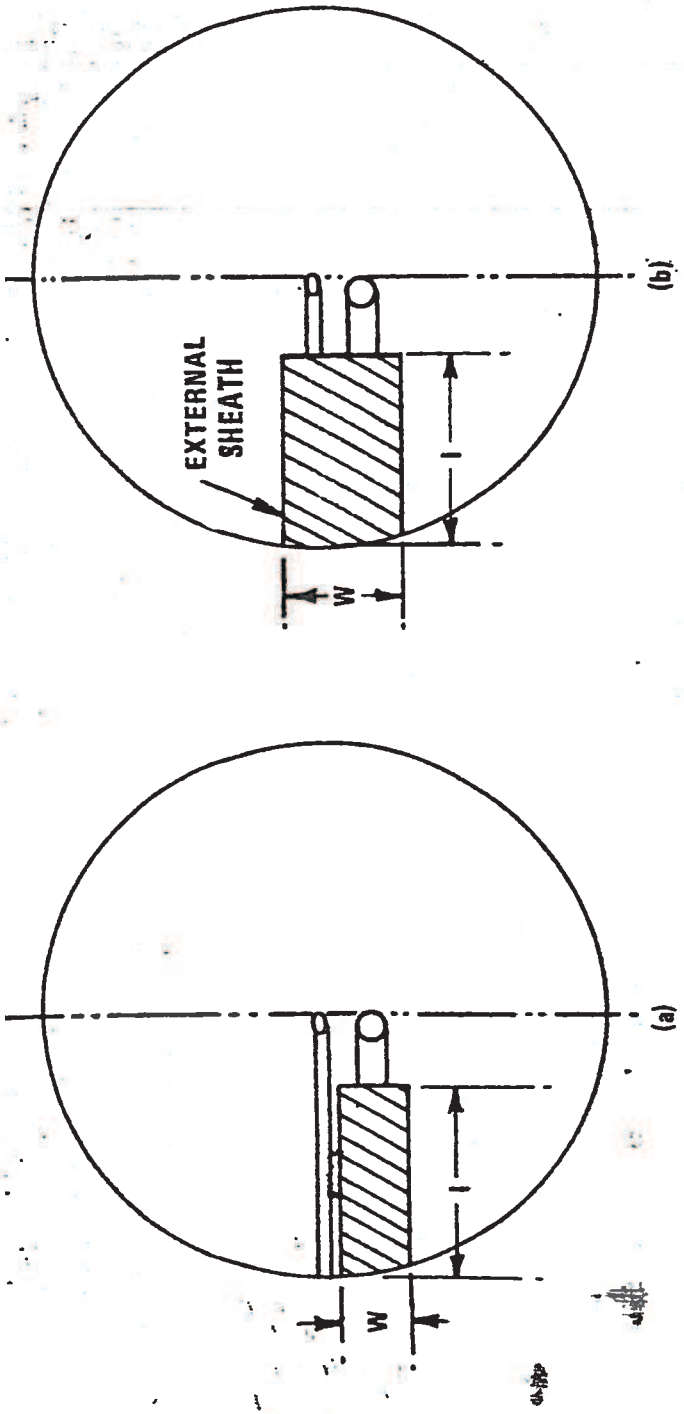

Figure 2-10. Projected-area models for typical pitot tube assemblies.

Figure 2-10. Projected-area models for typical pitot tube assemblies.

4.1.6 Field Use and Recalibration.

4.1.6.1 Field Use.

4.1.6.1.1 When a Type S pitot tube (isolated tube or assembly) is used in the field, the appropriate coefficient value (whether assigned or obtained by calibration) shall be used to perform velocity calculations. For calibrated Type S pitot tubes, the A side coefficient shall be used when the A side of the tube faces the flow, and the B side coefficient shall be used when the B side faces the flow; alternatively, the arithmetic average of the A and B side coefficient values may be used, irrespective of which side faces the flow.

4.1.6.1.2 When a probe assembly is used to sample a small duct (11 to 36 in. in diameter), the probe sheath sometimes blocks a significant part of the duct cross-section, causing a reduction in the effective value of $C_{p(s)}$. Consult Citation 9 in Section 6 for details. Conventional pitot-sampling probe assemblies are not recommended for use in ducts having inside diameters smaller than 12 inches (Citation 16 in Section 6).

4.1.6.2 Recalibration.

4.1.6.2.1 Isolated Pitot Tubes. After each field use, the pitot tube shall be carefully reexamined in top, side, and end views. If the pitot face openings are still aligned within the specifications illustrated in Figure 2-2 or 2-3, it can be assumed that the baseline coefficient of the pitot tube has not changed. If, however, the tube has been damanged to the extent that it no longer meets the specifications of Figure 2-2 or 2-3, the damage shall either be repaired to restore proper alignment of the face openings or the tube shall be discarded.

4.1.6.2.2 Pitot Tube Assemblies. After each field use, check the face opening alignment of the pitot tube, as in Section 4.1.6.2.1; also, remeasure the intercomponent spacings of the assembly. If the intercomponent spacings have not changed and the face opening alignment is acceptable, it can be assumed that the coefficient of the assembly has not changed. If the face opening alignment is no longer within the specifications of Figures 2-2 or 2-3, either repair the damage or replace the pitot tube (calibrating the new assembly, if necessary). If the intercomponent spacings have changed, restore the original spacings or recalibrate the assembly.

4.2 Standard pitot tube (if applicable). If a standard pitot tube is used for the velocity traverse, the tube shall be constructed according to the criteria of Section 2.7 and shall be assigned a baseline coefficient value of 0.99. If the standard pitot tube is used as part of an assembly, the tube shall be in an interference-free arrangement (subject to the approval of the Administrator).

4.3 Temperature Gauges. After each field use, calibrate dial thermometers, liquid-filled bulb thermometers, thermocouple-potentiometer systems, and other gauges at a temperature within 10 percent of the average absolute stack temperature. For temperatures up to 405° C (761° F), use an ASTM mercury-in-glass reference thermometer, or equivalent, as a reference; alternatively, either a reference thermocouple and potentiometer (calibrated by NBS) or thermometric fixed points, e.g., ice bath and boiling water (corrected for barometric pressure) may be used. For temperatures above 405° C (761° F), use an NBS-calibrated reference thermocouple-potentiometer system or an alternate reference, subject to the approval of the Administrator.

If, during calibration, the absolute temperatures measured with the gauge being calibrated and the reference gauge agree within 1.5 percent, the temperature data taken in the field shall be considered valid. Otherwise, the pollutant emission test shall either be considered invalid or adjustments (if appropriate) of the test results shall be made, subject to the approval of the Administrator.

4.4 Barometer. Calibrate the barometer used against a mercury barometer.

5. *Calculations*

Carry out calculations, retaining at least one extra decimal figure beyond that of the acquired data. Round off figures after final calculation.

5.1 Nomenclature.

A = Cross-sectional area of stack, m^2 (ft^2).

B_{ws} = Water vapor in the gas stream (from Method 5 or Reference Method 4), proportion by volume.

C_p = Pitot tube coefficient, dimensionless.

K_p = Pitot tube constant,

$$34.97 \frac{m}{sec}\left[\frac{(g/g\text{-mole})(mm\ Hg)}{(°K)(mm\ H_2O)}\right]^{1/2}$$

for the metric system and

$$85.49 \frac{ft}{sec}\left[\frac{(lb/lb\text{-mole})(in.\ Hg)}{(°R)(in.\ H_2O)}\right]^{1/2}$$

for the English system.

M_d = Molecular weight of stack gas, dry basis (see Section 3.6) g/g-mole (lb/lb-mole).

M_s = Molecular weight of stack gas, wet basis, g/g-mole (lb/lb-mole).

$M_s = M_d(1-B_{ws}) + 18.0\ B_{ws}$

Flue Gases. Leatherhead, England, The British Coal Utilisation Research Association, 1961. p. 129-133.

12. Knapp, K.T. The Number of Sampling Points Needed for Representative Source Sampling. In: Proceedings of the Fourth National Conference on Energy and the Environment, Theodore, L., et al. (ed.). Dayton, Dayton Section of the American Institute of Chemical Engineers. October 3-7, 1976. p. 563-568.

METHOD 2—DETERMINATION OF STACK GAS VELOCITY AND VOLUMETRIC FLOW RATE (TYPE S PITOT TUBE)

1. *Principle and Applicability*

1.1 Principle. The average gas velocity in a stack is determined from the gas density and from measurement of the average velocity head with a Type S (Stausscheibe or reverse type) pitot tube.

1.2 Applicability. This method is applicable for measurement of the average velocity of a gas stream and for quantifying gas flow.

This procedure is not applicable at measurement sites which fail to meet the criteria of Method 1, Section 2.1. Also, the method cannot be used for direct measurement in cyclonic or swirling gas streams; Section 2.4 of Method 1 shows how to determine cyclonic or swirling flow conditions. When unacceptable conditions exist, alternative procedures, subject to the approval of the Administrator, U.S. Environmental Protection Agency, must be employed to make accurate flow rate determinations; examples of such alternative procedures are: (1) to install straightening vanes; (2) to calculate the total volumetric flow rate stoichiometrically, or (3) to move to another measurement site at which the flow is acceptable.

2. *Apparatus*

Specifications for the apparatus are given below. Any other apparatus that has been demonstrated (subject to approval of the Administrator) to be capable of meeting the specifications will be considered acceptable.

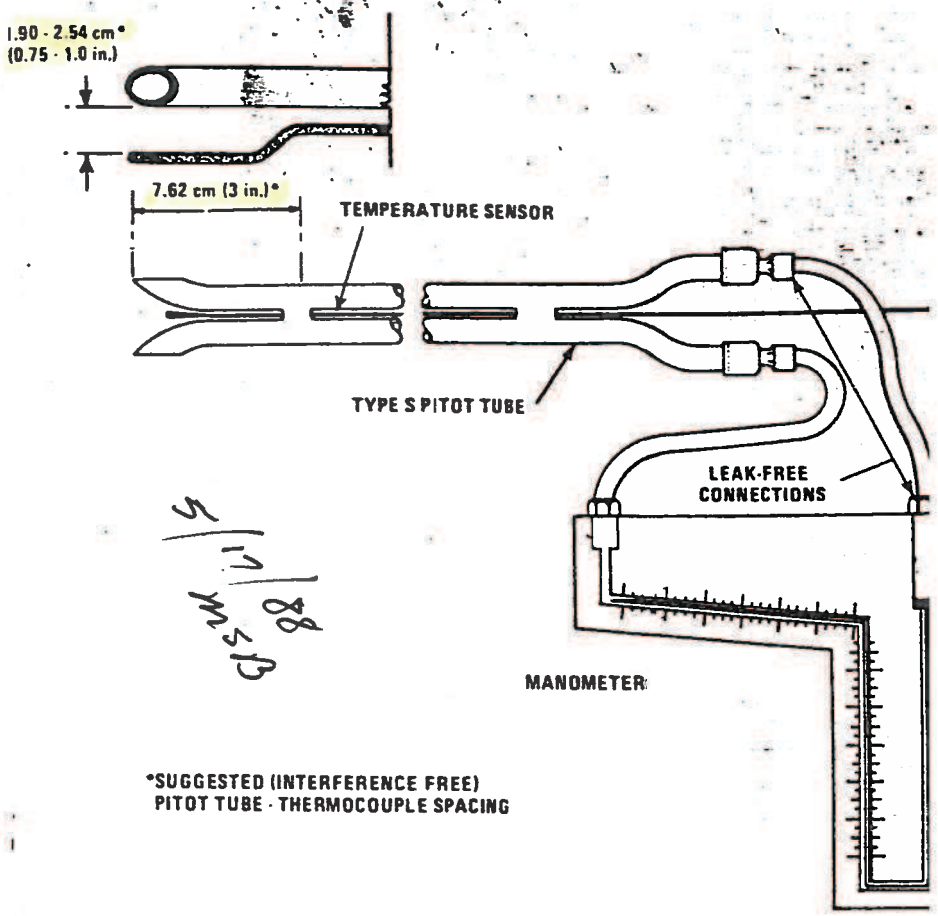

Figure 2-1. Type S pitot tube manometer assembly.

2.1 Type S Pitot Tube. The Type S pitot tube (Figure 2-1) shall be made of metal tubing (e.g. stainless steel). It is recommended that the external tubing diameter (dimension D_t, Figure 2-2b) be between 0.48 and 0.95 centimeters (3/16 and 3/8 inch). There shall be an equal distance from the base of each leg of the pitot tube to its face-opening plane (dimensions P_A and P_B Figure 2-2b); it is recommended that this distance be between 1.05 and 1.50 times the external tubing diameter. The face openings of pitot tube shall, preferably, be aligne shown in Figure 2-2; however, slight alignments of the openings are permiss (see Figure 2-3).

The Type S pitot tube shall have a kn coefficient, determined as outlined in tion 4. an identification number shall b signed to the pitot tube; this number s be permanently marked or engraved on body of the tube.

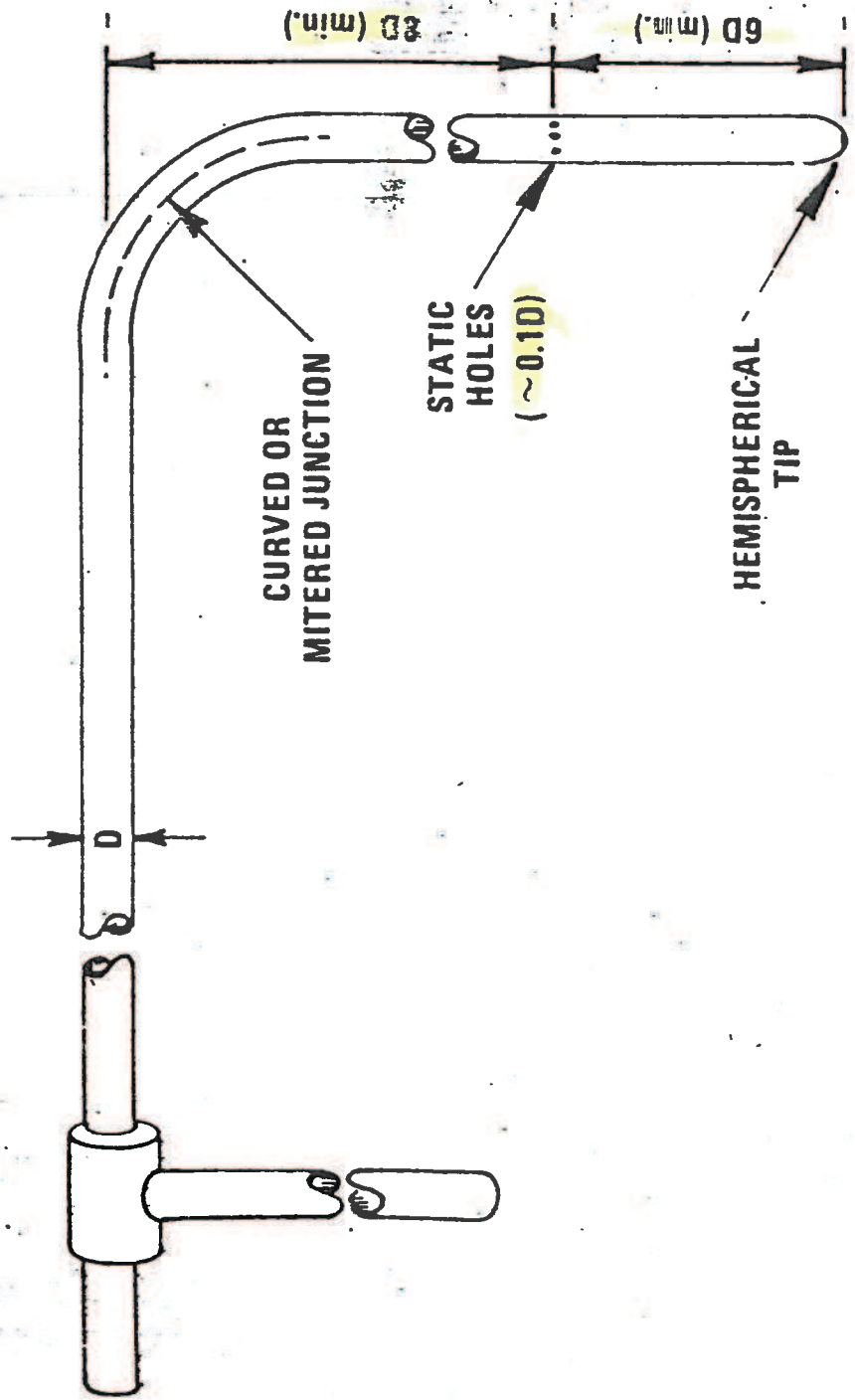

Figure 2-4. Standard pitot tube design specifications.

3. *Procedure*

3.1 Set up the apparatus as shown in Figure 2-1. Capillary tubing or surge tanks installed between the manometer and pitot tube may be used to dampen Δp fluctuations. It is recommended, but not required, that a pretest leak-check be conducted, as follows: (1) blow through the pitot impact opening until at least 7.6 cm (3 in.) H_2O velocity pressure registers on the manometer; then, close off the impact opening. The pressure shall remain stable for at least 15 seconds; (2) do the same for the static pressure side, except using suction to obtain the minimum of 7.6 cm (3 in.) H_2O. Other leak-check procedures, subject to the approval of the Administrator may be used.

3.2 Level and zero the manometer. Because the manometer level and zero may drift due to vibrations and temper changes, make periodic checks during traverse. Record all necessary data as sh in the example data sheet (Figure 2-5).

3.3 Measure the velocity head and perature at the traverse points specifie Method 1. Ensure that the proper diff tial pressure gauge is being used for range of Δp values encountered (see Se 2.2). If it is necessary to change to a sensitive gauge, do so, and remeasure th and temperature readings at each tra point. Conduct a post-test leak-check (datory), as described in Section 3.1 abo validate the traverse run.

3.4 Measure the static pressure in stack. One reading is usually adequate.

3.5 Determine the atmospheric pres

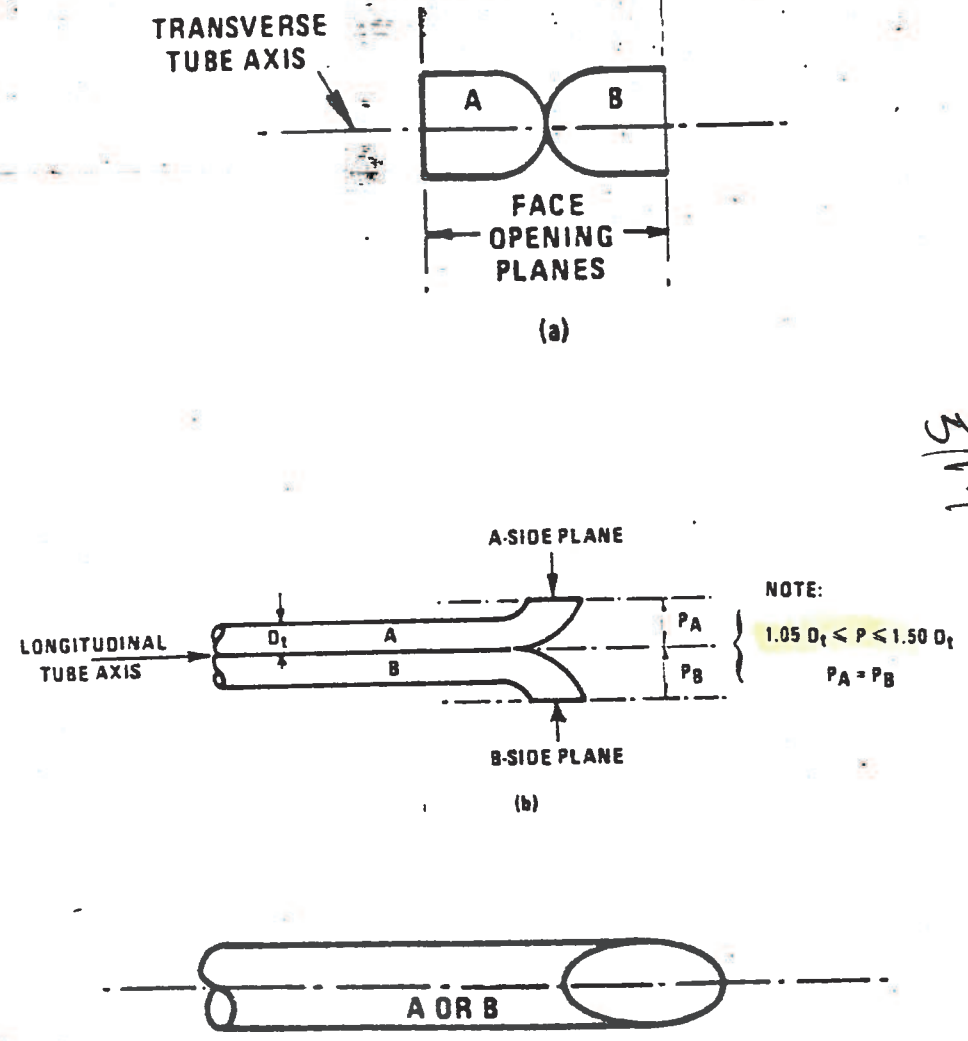

Figure 2-2. Properly constructed Type S pitot tube, shown in: (a) end view; face opening planes perpendicular to transverse axis; (b) top view; face opening planes parallel to longitudinal axis; (c) side view; both legs of equal length and centerlines coincident, when viewed from both sides. Baseline coefficient values of 0.84 may be assigned to pitot tubes constructed this way.

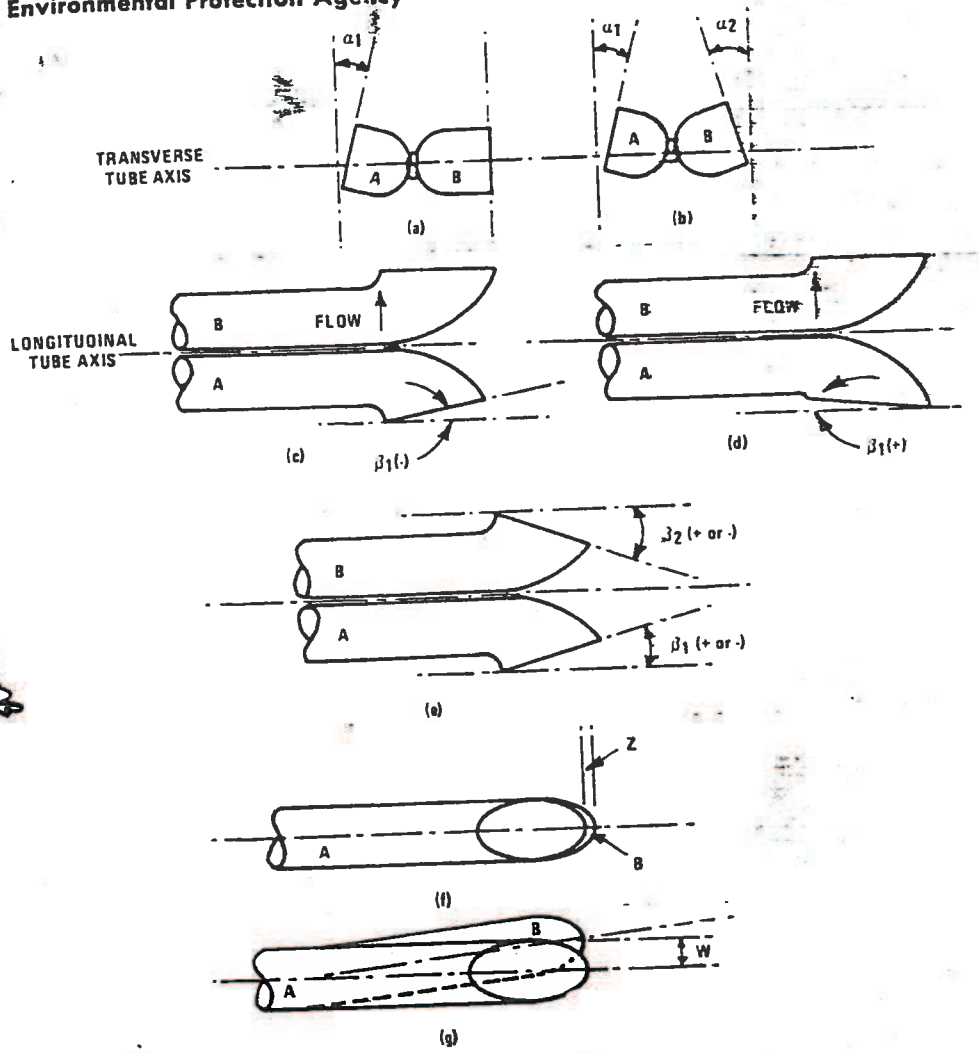

Figure 2-3. Types of face-opening misalignment that can result from field use or improper construction of Type S pitot tubes. These will not affect the baseline value of Cp(s) so long as $\alpha 1$ and $\alpha 2$ 10°, $\beta 1$ and $\beta 2$ 5°, z 0.32 cm (1/8 in.) and w 0.08 cm (1/32 in.) (citation 11 in Section 6).

A standard pitot tube may be used instead of a Type S, provided that it meets the specifications of Sections 2.7 and 4.2; note, however, that the static and impact pressure holes of standard pitot tubes are susceptible to plugging in particulate-laden gas streams. Therefore, whenever a standard pitot tube is used to perform a traverse, adequate proof must be furnished that the openings of the pitot tube have not plugged up during the traverse period; this can be done by taking a velocity head (Δp) reading at the final traverse point, cleaning out the impact and static holes of the standard pitot tube by "back-purging" with pressurized air, and then taking another Δp reading. If the Δp readings made before and after the air purge are the same (±5 percent), the traverse is acceptable. Otherwise reject the run. Note that if Δp at the final traverse point is unsuitably low, another point may be selected. If "back-purging" at regular intervals is part of the procedure, then comparative Δp readings shall b

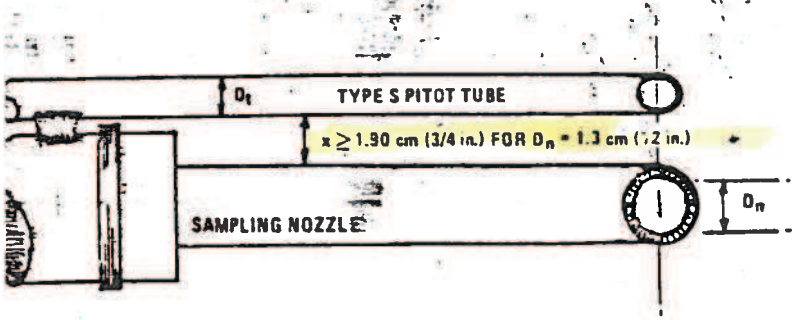

A. BOTTOM VIEW; SHOWING MINIMUM PITOT-NOZZLE SEPARATION.

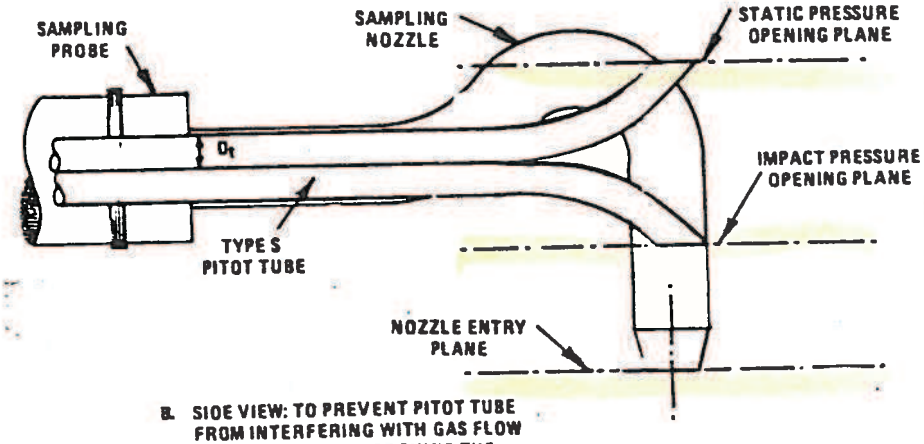

B. SIDE VIEW: TO PREVENT PITOT TUBE FROM INTERFERING WITH GAS FLOW STREAMLINES APPROACHING THE NOZZLE, THE IMPACT PRESSURE OPENING PLANE OF THE PITOT TUBE SHALL BE EVEN WITH OR ABOVE THE NOZZLE ENTRY PLANE.

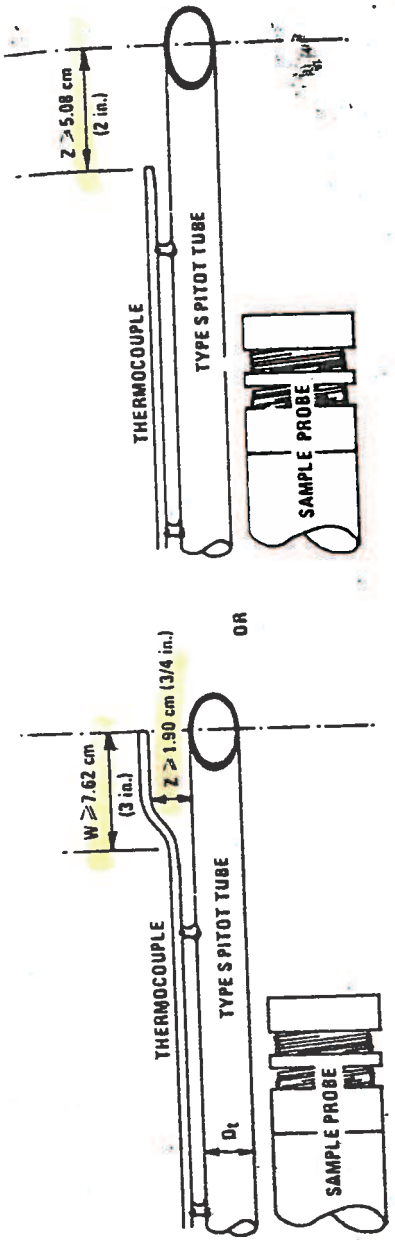

Figure 2-7. Proper thermocouple placement to prevent interference; D_t between 0.48 and 0.95 cm (3/16 and 3/8 in.).

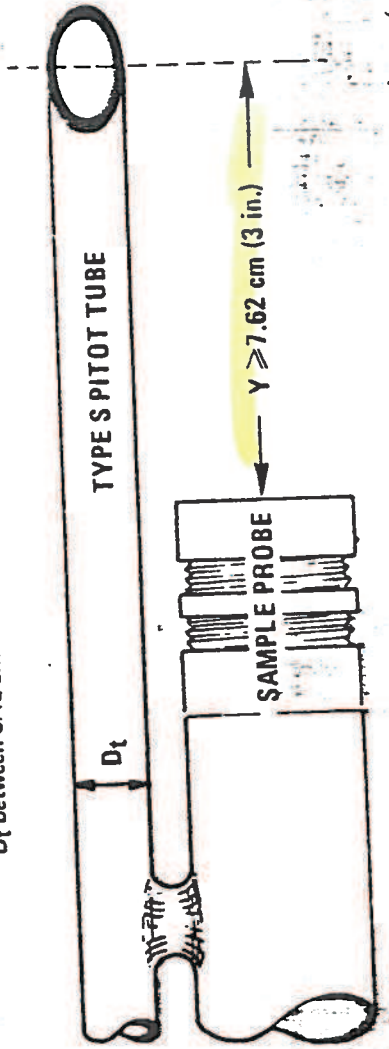

Figure 2-8. Minimum pitot-sample probe separation needed to prevent interference; D_t between 0.48 and 0.95 cm (3/16 and 3/8 in.).

MISSISSIPPI DEPARTMENT OF NATURAL RESOURCES
Bureau of Pollution Control
P.O. Box 10385
Jackson, Mississippi 39289-0385
(601) 961-5171

MEMORANDUM

TO: File

FROM: Jesse Thompson, Jr.

SUBJECT: Stack Test Review

DATE: June 2, 1989

Facility No. 110-0800-00001-101

The test data for emission point 101, Hercules Hattiesburg has been completed. The Norbo Dust Collector was tested using Method 5. The review calculations did not reveal any problems. The printout of the review results are attached. I recommend that the test be accepted.

JT:dfj

Plant Hercules, Inc.
Location Hattiesburg, #101
Operator DJM/JMW
Date May 24, 1988
Run no. #1
Sample box no 001

Meter box no 001
Meter H@ 1.83
C factor 1.13
Pilot tube coefficient, Cp 0.84

Ambient temperature 86 F
Barometric pressure 29.88
Assumed moisture, % 2%
Probe length, (ft) 6
Nozzle identification no .305
Average calibrated nozzle diameter, cm (in) .305 in.
Probe heater setting 0
Leak rate m³/min, (cfm) <0.01
Probe liner material SS
Static pressure, mm.Hg (in.Hg) 29.57
Filter No.

SCHEMATIC OF STACK CROSS SECTION

Start Time: 1128 hrs

End Time: 1247 hrs

T.P #	Sample time (min)	Vacuum (in. Hg)	Stack temp. (F) (Ts)	Velocity head (in) (p)	Pressure differ across orifice meter	Gas sample volume (cf)	Gas Sample temp. @ dry gas meter Inlet (F)	Gas Sample temp. @ dry gas meter Outlet (F)	Filter holder temp. (F)	Temp. of gas leaving condenser or last impinger (F)
Initial						628.624				
1	3 min	2.5	86	.13	1.33	630.45	88	86	Amb	< 65
2	3 min	3.5	86	.18	1.85	632.46	93	86	Amb	< 65
3	3 min	4.0	87	.19	1.95	634.66	98	86	Amb	< 65
4	3 min	4.0	87	.19	1.95	636.88	101	87	Amb	< 65
5	3 min	4.5	86	.21	2.15	639.18	106	88	Amb	< 65
6	3 min	4.5	87	.21	2.15	641.54	110	90	Amb	< 65
7	3 min	4.0	86	.20	2.05	643.81	114	90	Amb	< 65
8	3 min	3.5	86	.18	1.85	646.02	115	92	Amb	< 65
9	3 min	3.5	87	.18	1.85	648.14	117	94	Amb	< 65
10	3 min	3.5	87	.18	1.85	650.33	118	95	Amb	< 65
11	3 min	3.5	88	.18	1.85	652.47	121	96	Amb	< 65
12	3 min	3.5	88	.17	1.75	654.64	123	98	Amb	< 65
13	3 min	4.0	85	.20	2.05	656.94	110	96	Amb	< 65
14	3 min	4.0	82	.20	2.05	659.26	116	98	Amb	< 65
15	3 min	4.0	84	.20	2.05	661.73	120	102	Amb	< 65
16	3 min	4.5	87	.21	2.15	664.11	122	102	Amb	< 65
17	3 min	4.0	87	.19	1.95	666.39	123	104	Amb	< 65
18	3 min	4.0	88	.20	2.05	668.62	124	104	Amb	< 65
19	3 min	4.0	88	.18	1.85	670.91	125	105	Amb	< 65
20	3 min	3.0	88	.15	1.55	672.93	125	105	Amb	< 65
21	3 min	3.0	88	.14	1.45	674.93	126	106	Amb	< 65
22	3 min	2.5	88	.13	1.33	676.85	125	106	Amb	< 65
23	3 min	2.5	88	.12	1.22	678.68	124	106	Amb	< 65
24	3 min	2.5	88	.12	1.22	680.509	123	107	Amb	< 65
T.	72		2082	4.24	43.5	51.885	2767	2329		
Avg.			86.75	0.18	1.81		115	97		

BONNER ANALYTICAL TESTING COMPANY
RT. 13, BOX 85
HATTIESBURG, MS. 39401
(601)264-2854

NOMOGRAPH DATA

PLANT Hercules, Inc.

DATE 5/24/88

SAMPLING LOCATION Buell Norbo Dust Collector

RUN #1

CALIBRATED PRESSURE DIFFERENTIAL ACROSS ORIFICE, in. H_2O	$H@$	1.83
AVERAGE METER TEMPERATURE (80 + 30 F) F	T_m avg.	105 F
PERCENT MOISTURE IN GAS STREAM BY VOLUME	B_{wo}	2%
BAROMETRIC PRESSURE AT METER, in. Hg	P_m	29.88
STATIC PRESSURE IN STACK, in. Hg (P_m 29.89 + (.073)(.11) +0.073 x STACK GUAGE PRESSURE in in. H_2O 2	P_s	29.57
RATIO OF STATIC PRESSURE TO METER PRESSURE	P_s / P_m	0.990
AVERAGE STACK TEMPERATURE, F	T_s avg.	85
AVERAGE VELOCITY HEAD, in. H_2O 2	p avg.	.20
MAXIMUM VELOCITY HEAD, in. H_2O 2	p avg.	.30
C FACTOR	1.13	
CALCULATED NOZZLE DIAMRTER, in.	.296	
ACTUAL NOZZLE DIAMETER, in.	.305	
REFERENCE p, in. H_2O 2	.18	

HER-101-1

1. Summary of Field Data

Run #1

1. Ambient Temperature (F): 85 F
2. Weather: Overcast
3. Stack Height (ft): 8 ft.
4. Stack Area (ft): 5.77 ft.
5. Meter H@: 1.83
6. Pitot Correction Factor: 0.84
7. Nomograph C_f : 1.13
8. Probe Heater Setting: NA
9. Filter Box Temperature (F): Ambient
10. Last Impinger Temperature (F): < 65
11. Sample Time/Point: 3 min.
12. Points/Traverse: 24 Total
13. Probe Length: 6 ft.
14. Nozzle Diameter: 0.305
15. V : 51.154
16. Pbar: 29.88
17. Pavg: 0.18
18. $Pavg^{.5}$: 0.424
19. Havg: 1.85
20. Tsavg (F): 75
21. Tsavg (R): 535
22. Tmlavg (F): 113
23. TmOavg (F): 94
24. Tmavg (F): 104
25. Tmavg (R): 564

HER-101-1

26. Pm: 29.88

27. Ps: 29.57

28. V_{lc} : 18.52 ml

3. Impinger Data

	1st	2nd	3rd	4th
Final	103	100	0	215.52 g
Initial	100	100	0	200 g
Difference	3	0	0	15.52
			Total difference	18.52

4. Fyrite Data

Run #1

% Carbon Dioxide = 0%

% Oxygen = 21.9%

% Carbon Monoxide =

$$\text{Excess Air (ea)} = (\%O_2) - 0.5\,(\%CO)/0.264\,(\%N_2) - (\%o_2) + 0.5\,(\%CO)$$

=

$$M_d - 0.44\,(\%CO_2) + 0.32\,(O_2) + 0.28\,(\%N_2 + \%CO)$$

$$= (0.44)(0.0) + (0.32)(21.9) + (0.28)(78.1)$$
$$= 28.88$$

$$M_s = M_d (1-B_{wo}) + 18(B_{wo})$$
$$= 28.88(0.983) + 18(0.017)$$

$$M_s = 28.70$$

HER-101-1

5. Filter Data

Run #1

	Filter	H O Fraction	Acetone Fraction	Acetone Blank	Filter Blank
Final wt	0.7270		83.2416	85.3740	0.6989
Initial wt	0.7011		83.2375	85.3728	0.6989
Difference	0.0259		0.0041	0.0012	- 0 -
Corr.	- 0 -		+ 0.0012		
Sample wt	0.0259		0.0053		

Total weight	0.0312

HER-101-1

Run No. #1

1. Average Dry Gas Meter Temperature: (f)
   Have =
   Pave =

2. Dry Gas Volume:
$$Vmstd = 17.64 * Vm * Y \left(\frac{Pbar + H/13.6}{Tm}\right) = 17.64 \times 51.154 \times 1.05 \times \left(\frac{30.02}{564}\right)$$
$$= \boxed{50.431}$$

3. Volume of water Vapor:
$$Vwstd = 0.04707\ ft3/ml * Vlc = 0.04707 \times 18.52$$
$$= \boxed{0.871}$$

4. Moisture Content:
$$Bwo = \frac{Vwstd}{Vwstd + Vmstd} = \frac{0.871}{0.871 + 50.431}$$
$$= \boxed{0.017}$$

5. Concentration in gr/SCF:
$$C's = (0.0154\ gr/mg)\ (Mn/Vmstd) = 0.0154 \times \frac{31.2}{50.431}$$
$$= \boxed{0.0095}$$

6. Concentration in lb/ft3:
$$Cs = 2.205 \times 10\text{-}6\ (Mn/Vmstd) = 2.205 \times 10^{-6}$$
$$= \boxed{1.36 \times 10^{-6}}$$

7. Stack Gas Velocity:
$$Vsavg. = (85.49)(Cp)(Pavg)\left(\frac{Ts\ avg}{PsMs}\right)^{.5} = (85.49)(0.84)(0.424)\left(\frac{535}{29.88 \times 28.70}\right)^{.5}$$
$$= \boxed{24.049}$$

8. Stack Gas Volumetric Flowrate:
$$Qs = 3600(1-Bws)(Vs)(A)\frac{Tstd}{Tsavg}\frac{Ps}{Pstd} = (3600)(0.983)(24.049)(5.77)\left(\frac{(528)(29.57)}{(535)(29.92)}\right)$$
$$= \boxed{478959}$$

9. Pollutant Mass Emission Rate, lb/hr:
$$PMRc = (Qs)\ (Cs) = 478959 \times 1.36 \times 10^{-6}$$
$$= \boxed{0.651}$$

10. Percent Isokinetic:
$$I = (0.09450)\frac{Ts\ Vmstd}{PsVsAn\ 0\ (1-Bws)} = \frac{(0.09450)(535)(50.431)}{(29.57)(24.049)(0.000507)(72)(0.983)}$$
$$I = \boxed{99.91\%}$$

HER-101-2

Plant Hercules, Inc.	Ambient temperature 87 F
Location Hattiesburg, #101	Barometric pressure 29.88
Operator DJM/JMW	Assumed moisture,% 2%
Date May 24, 1988	Probe length,(ft) 6
Run no. #2	Nozzle identification no .305
Sample box no 002	Average calibrated nozzle diameter, cm (in) .305 in.
Meter box no 002	Probe heater setting 0
Meter H@ 1.83	Leak rate m'/min,(cfm) <0.01
C factor 1.14	Probe liner material SS
Pilot tube coefficient,Cp 0.84	Static pressure,mm.Hg(in.Hg) 29.57
	Filter No.

SCHEMATIC OF STACK CROSS SECTION

Start Time: 1305 hrs

End Time: 1420 hrs

T.P #	Sample time (min)	Vacuum (in. Hg)	Stack temp. (F) (Ts)	Velocity head (In) (p)	Pressure differ across orific meter	Gas sample volume (cf)	Gas Sample temp. @ dry gas meter Inlet (F)	Gas Sample temp. @ dry gas meter Outlet (F)	Filter holder temp. (F)	Temp.of gas leaving condenser or last impinger (F)
						680.793				
1	3 min	2.0	88	.18	1.85	682.82	106	104	Amb	< 65
2	3 min	2.0	88	.18	1.85	684.96	112	106	Amb	< 65
3	3 min	2.5	84	.20	2.05	687.23	115	106	Amb	< 65
4	3 min	2.5	87	.19	1.95	689.51	119	106	Amb	< 65
5	3 min	2.5	88	.19	1.95	691.83	122	106	Amb	< 65
6	3 min	2.5	88	.20	2.05	694.02	124	106	Amb	< 65
7	3 min	2.0	88	.18	1.85	696.42	126	107	Amb	< 65
*8	3 min	2.0	88	.16	1.65	698.45	122	107	Amb	< 65
9	3 min	1.5	88	.14	1.45	700.41	120	107	Amb	< 65
10	3 min	1.5	88	.12	1.22	702.29	122	107	Amb	< 65
11	3 min	1.5	88	.12	1.22	704.12	123	108	Amb	< 65
12	3 min	1.5	89	.11	1.12	705.95	123	108	Amb	< 65
13	3 min	2.0	89	.16	1.65	708.03	118	107	Amb	< 65
14	3 min	2.0	90	.16	1.65	710.14	121	108	Amb	< 65
15	3 min	2.0	89	.16	1.65	712.25	124	108	Amb	< 65
16	3 min	2.0	88	.17	1.75	714.37	126	109	Amb	< 65
17	3 min	2.0	87	.17	1.75	716.53	127	110	Amb	< 65
18	3 min	2.0	85	.18	1.85	718.71	126	110	Amb	< 65
19	3 min	2.5	85	.19	1.95	720.96	127	110	Amb	< 65
20	3 min	2.5	84	.19	1.95	723.23	127	109	Amb	< 65
21	3 min	2.0	83	.18	1.85	725.51	126	109	Amb	< 65
22	3 min	2.0	83	.18	1.85	727.71	126	109	Amb	< 65
23	3 min	2.0	83	.16	1.65	729.84	124	108	Amb	< 65
24	3 min	1.5	83	.12	1.22	731.792	124	108	Amb	< 65
T.	72		2081	3.99	40.98	50.999	2930	2583		
Avg.			86.71	0.166	1.71		122.1	107.6		

* 1325 Worker inadvertantly stopped flow in stack.

HER-101-2

BONNER ANALYTICAL TESTING COMPANY
RT. 13, BOX 85
HATTIESBURG, MS. 39401
(601)264-2854

NOMOGRAPH DATA

PLANT Hercules, Inc.

DATE 5/24/88

SAMPLING LOCATION Buell Norbo Dust Collector

RUN #2

CALIBRATED PRESSURE DIFFERENTIAL ACROSS ORIFICE, in. H_2O	H @	1.83
AVERAGE METER TEMPERATURE (80 + 30 F) F	T_m avg.	113 F
PERCENT MOISTURE IN GAS STREAM BY VOLUME	B_{wo}	2%
BAROMETRIC PRESSURE AT METER, in. Hg	P_m	29.88
STATIC PRESSURE IN STACK, in. Hg (P_m 29.89 + (.073)(.11) +0.073 x STACK GUAGE PRESSURE in in. H_2O 2	P_s	29.57
RATIO OF STATIC PRESSURE TO METER PRESSURE	$s P_m$	.990
AVERAGE STACK TEMPERATURE, F	T_s avg.	87
AVERAGE VELOCITY HEAD, in. H_2O 2	p avg.	.20
MAXIMUM VELOCITY HEAD, in. H_2O 2	p avg.	.25
C FACTOR	1.14	
CALCULATED NOZZLE DIAMRTER, in.	.296	
ACTUAL NOZZLE DIAMETER, in.	.305	
REFERENCE p, in. H_2O 2	.18	

HER-101-2

1. Summary of Field Data

Run #2

1. Ambient Temperature (F): 87 F
2. Weather: Overcast
3. Stack Height (ft): 8 ft.
4. Stack Area (ft): 5.77 ft.
5. Meter H@: 1.83
6. Pitot Correction Factor: 0.84
7. Nomograph C_f : 1.13
8. Probe Heater Setting: NA
9. Filter Box Temperature (F): Ambient
10. Last Impinger Temperature (F): < 65
11. Sample Time/Point: 3 min.
12. Points/Traverse: 24 Total
13. Probe Length: 6 ft.
14. Nozzle Diameter: 0.305
15. V : 50.999
16. Pbar: 29.88
17. Pavg: 0.166
18. $Pavg^{.5}$: 0.407
19. Havg: 1.71
20. Tsavg (F): 87
21. Tsavg (R): 557
22. Tmlavg (F): 122
23. TmOavg (F): 107
24. Tmavg (F): 114
25. Tmavg (R): 575

HER-101-2

26. Pm: 29.88

27. Ps: 29.57

28. V_{lc} : 25.72 ml

3. Impinger Data

	1st	2nd	3rd	4th
Final	109	103	3	210.72 g
Initial	100	100	0	200 g
Difference	9	3	3	10.72
			Total difference	25.72

4. Fyrite Data

Run #1

% Carbon Dioxide = 0%

% Oxygen = 21.8%

% Carbon Monoxide =

Excess Air (ea) = $(\%O_2) - 0.5(\%CO)/0.264(\%N_2) - (\%o) + 0.5(\%CO)$

=

$M_d - 0.44(\%CO) + 0.32(O) + 0.28(\%N + \%CO)$

$= (0.44)(0.0) + (0.32)(21.8) + (0.28)(78.2)$

$= 28.87$

$M_s = M_d(1-B_{wo}) + 18(B_{wo})$

$= 28.87(0.976) + 18(0.0239)$

$M_s = 28.60$

HER-101-2

5. Filter Data

Run #2

	Filter	H O Fraction	Acetone Fraction	Acetone Blank	Filter Blank
Final wt	0.7286		75.0765	85.3740	0.6989
Initial wt	0.7062		75.0730	85.3728	0.6989
Difference	0.0224		0.0035	0.0012	- 0 -
Corr.	- 0 -		+ 0.0012		
Sample wt	0.0224		0.0047		
Total weight			0.0271		

HER-101-2

Run No. #2

1. Average Dry Gas Meter Temperature: (f)
   Have =
   Pave =

2. Dry Gas Volume:
$$Vmstd = 17.64 * Vm * Y \left(\frac{Pbar + H/13.6}{Tm}\right) = 17.64 \times 50.999 \times 1.05 \times \left(\frac{30.01}{575}\right)$$
$$= \boxed{49.293}$$

3. Volume of water Vapor:
$$Vwstd = 0.04707\ ft3/ml * Vlc = 0.04707 \times 25.72$$
$$= \boxed{1.21}$$

4. Moisture Content:
$$Bwo = \frac{Vwstd}{Vwstd + Vmstd} = \frac{1.21}{(1.21 + 49.293)}$$
$$= \boxed{0.0239}$$

5. Concentration in gr/SCF:
$$C's = (0.0154\ gr/mg)\ (Mn/Vmstd) = 0.0154 \times \frac{27.1}{49.293}$$
$$= \boxed{0.0085}$$

6. Concentration in lb/ft3:
$$Cs = 2.205 \times 10\text{-}6\ (Mn/Vmstd) = 2.205 \times 10^{-6} \times \frac{27.1}{49.293}$$
$$= \boxed{1.21 \times 10^{-6}}$$

7. Stack Gas Velocity:
$$Vsavg. = (85.49)(Cp)(Pavg)\left(\frac{Ts\ avg}{PsMs}\right)^{.5} = (85.49)(0.84)(0.407)\left(\frac{557}{29.57 \times 28.60}\right)^{.5}$$
$$= \boxed{23.720}$$

8. Stack Gas Volumetric Flowrate:
$$Qs = 3600(1-Bws)(Vs)(A)\frac{Tstd}{Tsavg}\frac{Ps}{Pstd} = (3600)(0.976)(23.720)(5.77)\left(\frac{(528)(29.57)}{(557)(29.92)}\right)$$
$$= \boxed{450510}$$

9. Pollutant Mass Emission Rate, lb/hr:
$$PMRc = (Qs)\ (Cs) = 555112 \times 1.212 \times 10^{-6}$$
$$= \boxed{0.673}$$

10. Percent Isokinetic:
$$I = (0.09450)\frac{Ts\ Vmstd}{PsVsAn\ 0\ (1-Bws)} = \frac{(0.09450)(557)(49.293)}{(29.57)(23.720)(0.000507)(72)(0.976)}$$
$$I = \boxed{103.8\ \%}$$

HER-101-3

Plant Hercules, Inc.	Ambient temperature 82 F
Location Hattiesburg, #101	Barometric pressure 29.88
Operator DJM/JMW	Assumed moisture,% 2%
Date May 24, 1988	Probe length,(ft) 6
Run no. #3	Nozzle identification no .305
Sample box no 001	Average calibrated nozzle diameter, cm (in) .305 in.
Meter box no 001	Probe heater setting 0
Meter H@ 1.83	Leak rate m'/min,(cfm) <0.01
C factor 1.13	Probe liner material SS
Pilot tube coefficient,Cp 0.84	Static pressure,mm.Hg(in.Hg) 29.57
	Filter No.

SCHEMATIC OF STACK CROSS SECTION

Start Time: 1449 hrs

End Time: 1603 hrs

T.P #	Sample time (min)	Vacuum (in. Hg)	Stack temp. (F) (Ts)	Velocity head (in) (p)	Pressure differ across orific meter	Gas sample volume (cf)	Gas Sample temp. @ dry gas meter Inlet (F)	Gas Sample temp. @ dry gas meter Outlet (F)	Filter holder temp. (F)	Temp.of gas leaving condenser or last impinger (F)
Initial						731.861				
1	3 min	3.5	82	.15	1.55	733.91	98	98	Amb	< 65
2	3 min	4.0	81	.17	1.75	735.91	103	100	Amb	< 65
3	3 min	4.0	81	.18	1.85	738.01	110	100	Amb	< 65
4	3 min	4.5	81	.19	1.95	740.25	113	100	Amb	< 65
5	3 min	4.5	80	.19	1.95	742.50	114	100	Amb	< 65
6	3 min	4.5	78	.20	2.05	744.72	114	98	Amb	< 65
7	3 min	4.5	76	.20	2.05	746.92	115	98	Amb	< 65
8	3 min	4.5	75	.20	2.05	749.15	115	97	Amb	< 65
9	3 min	4.5	75	.19	1.95	751.36	114	95	Amb	< 65
10	3 min	4.5	74	.20	2.05	753.61	114	94	Amb	< 65
11	3 min	4.0	74	.18	1.85	755.74	113	93	Amb	< 65
12	3 min	4.0	74	.18	1.85	757.91	113	93	Amb	< 65
13	3 min	4.5	70	.19	1.95	760.03	105	91	Amb	< 65
14	3 min	4.5	70	.19	1.95	762.23	109	91	Amb	< 65
15	3 min	4.5	70	.20	2.05	764.41	112	91	Amb	< 65
16	3 min	4.5	72	.21	2.15	766.63	112	90	Amb	< 65
17	3 min	4.5	73	.20	2.05	768.82	114	90	Amb	< 65
18	3 min	5.0	73	.22	2.25	771.09	117	90	Amb	< 65
19	3 min	4.5	73	.19	1.95	773.35	120	90	Amb	< 65
20	3 min	4.0	73	.16	1.65	775.43	120	91	Amb	< 65
21	3 min	3.5	73	.15	1.55	777.45	118	91	Amb	< 65
22	3 min	3.0	73	.13	1.33	779.36	118	91	Amb	< 65
23	3 min	3.0	74	.13	1.33	781.21	117	91	Amb	< 65
24	3 min	3.0	74	.12	1.22	783.015	117	91	Amb	< 65
T.	72		1799	4.32	44.33	51.154	2715	2254		
Avg.			74.96	0.18	1.85		113.1	93.92		

HER-101-3

BONNER ANALYTICAL TESTING COMPANY
RT. 13, BOX 85
HATTIESBURG, MS. 39401
(601)264-2854

NOMOGRAPH DATA

PLANT Hercules, Inc.

DATE 5/24/88

SAMPLING LOCATION Buell Norbo Dust Collector

RUN #3

CALIBRATED PRESSURE DIFFERENTIAL ACROSS ORIFICE, in. H_2O	H @	1.83
AVERAGE METER TEMPERATURE (82 + 25 F) F	T_m avg.	107 F
PERCENT MOISTURE IN GAS STREAM BY VOLUME	B_{wo}	2%
BAROMETRIC PRESSURE AT METER, in. Hg	P_m	29.88
STATIC PRESSURE IN STACK, in. Hg (P_m 29.89 + +0.073 x STACK GUAGE PRESSURE In in. H_2O (.073)(-43) 2	P_s	29.57
RATIO OF STATIC PRESSURE TO METER PRESSURE	$s P_m$	0.990
AVERAGE STACK TEMPERATURE, F	T_s avg.	82
AVERAGE VELOCITY HEAD, in. H_2O	p avg.	.18
MAXIMUM VELOCITY HEAD, in. H_2O	p avg.	.25
C FACTOR	1.13	
CALCULATED NOZZLE DIAMRTER, in.	.303	
ACTUAL NOZZLE DIAMETER, in.	.305	
REFERENCE p, in. H_2O	.185	

HER-101-1

1. Summary of Field Data

Run #3

1. Ambient Temperature (F): 82 F
2. Weather: Overcast
3. Stack Height (ft): 8 ft.
4. Stack Area (ft^2): 5.77 ft.
5. Meter H@: 1.83
6. Pitot Correction Factor: 0.84
7. Nomograph C_f : 1.13
8. Probe Heater Setting: NA
9. Filter Box Temperature (F): Ambient
10. Last Impinger Temperature (F): < 65
11. Sample Time/Point: 3 min.
12. Points/Traverse: 24 Total
13. Probe Length: 6 ft.
14. Nozzle Diameter; 0.305
15. V : 51.885
16. Pbar: 29.88
17. Pavg: 0.176
18. $Pavg^{.5}$: 0.419
19. Havg: 1.81
20. Tsavg (F): 87
21. Tsavg (R): 557
22. Tmlavg (F): 115
23. TmOavg (F): 97
24. Tmavg (F): 106
25. Tmavg (R): 566

HER-101-3

26. Pm: 29.88

27. Ps: 29.57

28. V_{lc} : 22.03 ml

3. Impinger Data

	1st	2nd	3rd	4th
Final	105	102	2	213.03 g
Initial	100	100	0	200 g
Difference	5	2	2	13.03
			Total difference	22.03

4. Fyrite Data

Run #3

% Carbon Dioxide = 0%

% Oxygen = 21.9%

% Carbon Monoxide =

$$\text{Excess Air (ea)} = (\%O_2) - 0.5\,(\%CO)/0.264\,(\%N_2) - (\%o) + 0.5\,(\%CO)$$

=

$$M_d - 0.44\,(\%CO) + 0.32\,(O) + 0.28\,(\%N + \%CO)$$

$$= (0.44)(0.0) + (0.32)(21.9) + (0.28)(78.1)$$
$$= 28.88$$

$$M_s = M_d (1-B_{wo}) + 18(B_{wo})$$
$$= 28.88(0.98) + 18(0.02)$$

$$M_s = 28.65$$

HER-101-3

5. Filter Data

Run #3

	Filter	H O Fraction	Acetone Fraction	Acetone Blank	Filter Blank
Final wt	0.7325		82.1947	85.3740	0.6989
Initial wt	0.7016		82.1855	85.3728	0.6989
Difference	0.0309		0.0092	0.0012	- 0 -
Corr.	- 0 -		+ 0.0012		
Sample wt	0.0309		0.0104		

Total weight 0.0413

HER-101-3

Run No. #3

1. Average Dry Gas Meter Temperature: (f)
   Have =
   Pave =

2. Dry Gas Volume: $Vmstd = 17.64 * Vm * Y \left(\frac{Pbar + H/13.6}{Tm}\right) = 17.64 \times 51.154 \times 1.05 \times \left(\frac{30.01}{566}\right)$

   $= \boxed{50.241}$

3. Volume of water Vapor:
   $Vwstd = 0.04707\ ft3/ml * Vlc = 0.04707 \times 22.03$

   $= \boxed{1.037}$

4. Moisture Content:
   $Bwo = \frac{Vwstd}{Vwstd + Vmstd} = \frac{1.037}{1.037 + 50.241}$

   $= \boxed{0.020}$

5. Concentration in gr/SCF:
   $C's = (0.0154\ gr/mg)\ (Mn/Vmstd) = 0.0154 \times \frac{41.3}{50.241}$

   $= \boxed{0.0126}$

6. Concentration in lb/ft3:
   $Cs = 2.205 \times 10\text{-}6\ (Mn/Vmstd) = 2.205 \times 10^{-6} \times \frac{41.3}{50.241}$

   $= \boxed{1.81 \times 10^{-6}}$

7. Stack Gas Velocity:
   $Vsavg.=(85.49)(Cp)(Pavg)\left(\frac{Ts\ avg}{PsMs}\right)^{.5} = (85.49)(0.84)(0.419)\left(\frac{557}{29.57 \times 28.65}\right)^{.5}$

   $= \boxed{24.398}$

8. Stack Gas Volumetric Flowrate:
   $Qs=3600(1-Bws)(Vs)(A)\frac{Tstd}{Tsavg}\frac{Ps}{Pstd} = (3600)(0.98)(24.398)(5.77)\left(\frac{(528)(29.57)}{(557)(29.92)}\right)$

   $= \boxed{465287}$

9. Pollutant Mass Emission Rate, lb/hr:
   $PMRc = (Qs)\ (Cs) = 465287 \times 1.81 \times 10^{-6}$

   $= \boxed{0.842}$

10. Percent Isokinetic:
    $I = (0.09450)\frac{Ts\ Vmstd}{PsVsAn\ 0\ (1-Bws)} = \frac{(0.09450)(557)(50.241)}{(29.57)(24.398(0.000507)(72)(0.98)}$

    $I = \boxed{102.5}$

Plant Hercules Inc 101
Location Hattiesburg
Operator DM/JW
Date 24 May 88
Run no. # 001
Sample box no 001

Meter box no 001
Meter H@ 1.83
C factor 1.13
Pilot tube coefficient, Cp 0.84

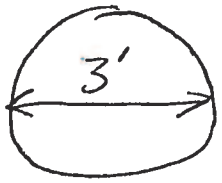

SCHEMATIC OF STACK CROSS SECTION

Ambient temperature 85
Barometric pressure 29.88
Assumed moisture, % 2
Probe length, (ft) 6
Nozzle identification no .305
Average calibrated nozzle diameter, cm (in) .305
Probe heater setting 0
Leak rate m³/min, (cfm) <0.01
Probe liner material SS
Static pressure, mm. Hg (in. Hg) 29.57
Filter No.

Start Time: 1128 hrs

End Time: 1247 hrs

T. A #	Sample time (min)	Vacuum (in. Hg)	Stack temp. (°F) (Ts)	Velocity head (in) (p)	Pressure differ across orific meter	Gas sample volume (cf)	Gas Sample temp. @ dry gas meter Inlet (°F)	Gas Sample temp. @ dry gas meter Outlet (°F)	Filter holder temp. (°F)	Temp. of gas leaving condenser or last impinger (°F)
Initial			✓	✓	✓	628.624	✓	✓		
1	3 min	2.5	86	.13	1.33	630.45	88	86	Ambient	<65
2	3 min	3.5	86	.18	1.85	632.46	93	86	Ambient	<65
3	3 min	4.0	87	.19	1.95	634.66	98	86	Ambient	<65
4	3 min	4.0	87	.19	1.95	636.88	101	87	Ambient	<65
5	3 min	4.5	86	.21	2.15	639.18	106	88	Ambient	<65
6	3 min	4.5	87	.21	2.15	641.54	110	90	Ambient	<65
7	3 min	4.0	86	.20	2.05	643.81	114	90	Ambient	<65
8	3 min	3.5	86	.18	1.85	646.02	115	92	Ambient	<65
9	3 min	3.5	87	.18	1.85	648.14	117	94	Ambient	<65
10	3 min	3.5	87	.18	1.85	650.33	118	95	Ambient	<65
11	3 min	3.5	88	.18	1.85	652.47	121	96	Ambient	<65
12	3 min	3.5	88	.19	1.95	654.64	123	98	Ambient	<65
13	3 min	4.0	85	.20	2.05	656.94	110	96	Ambient	<65
14	3 min	4.0	82	.20	2.05	659.26	116	98	Ambient	<65
15	3 min	4.0	84	.20	2.05	661.73	120	102	Ambient	<65
16	3 min	4.5	87	.21	2.15	664.11	122	102	Ambient	<65
17	3 min	4.0	87	.19	1.95	666.39	123	104	Ambient	<65
18	3 min	4.0	88	.20	2.05	668.62	124	104	Ambient	<65
19	3 min	4.0	88	.18	1.85	670.91	125	105	Ambient	<65
20	3 min	3.0	88	.15	1.55	672.93	125	105	Ambient	<65
21	3 min	3.0	88	.14	1.45	674.93	126	106	Ambient	<65
22	3 min	2.5	88	.13	1.33	676.85	125	106	Ambient	<65
23	3 min	2.5	88	.12	1.22	678.68	124	106	Ambient	<65
24	3 min	2.5	88	.12	1.22	680.509	123	107	Ambient	<65
T.	72		2082	4.24	43.5		2767	2329		
Avg			86.75	.176	1.812	51.885	115.29	97.04		

BONNER ANALYTICAL TESTING COMPANY
RT. 13, BOX 85
HATTIESBURG, MS. 39401
(601)264-2854

NOMOGRAPH DATA

PLANT Hercules, Inc

DATE 25 May 88

SAMPLING LOCATION #101 Buell Norbo Dust Collector
Run #1

CALIBRATED PRESSURE DIFFERENTIAL ACROSS ORIFICE, in. H O	H @	1.83
AVERAGE METER TEMPERATURE (AMBIENT + 20- F), F — 85 20	T m avg.	105
PERCENT MOISTURE IN GAS STREAM BY VOLUME	B wo	2
BAROMETRIC PRESSURE AT METER, in. Hg	P m	29.88
STATIC PRESSURE IN STACK, in. Hg (P + 0.073 x STACK GUAGE PRESSURE in in. H O — 29.88 + (.073)(-4.3)	P s	29.57
RATIO OF STATIC PRESSURE TO METER PRESSURE	s P m	.990
AVERAGE STACK TEMPERATURE, F	T s avg.	85
AVERAGE VELOCITY HEAD, in. H O	P avg.	.20
MAXIMUM VELOCITY HEAD, in. H O	P avg.	.30
C FACTOR		1.13
CALCULATED NOZZLE DIAMRTER, in.		.296
ACTUAL NOZZLE DIAMETER, in.		.305
REFERENCE P_1 in. H O		.18

101/1

1. Summary of Field Data

Run 1

1. Ambient Temperature (F): 85
2. Weather: OVERCAST
3. Stack Height (ft): 8ft
4. Stack Area (ft): 5.77'
5. Meter H@: 1.83
6. Pitot Correction Factor: 0.84
7. Nomograph C_f : 1.13
8. Probe Heater Setting: NA
9. Filter Box Temperature (F): Ambient
10. Last Impinger Temperature (F): <65
11. Sample Time/Point: 3
12. Points/Traverse: 24
13. Probe Length: 6
14. Nozzle Diameter: 0.305
15. V_m: 51.154
16. Pbar: 29.88
17. ΔPavg: 0.18
18. $\sqrt{\Delta P}$avg: 0.424
19. ΔHavg: 1.85
20. Tsavg (^{0}F): 75 460
21. Tsavg (^{0}R): 535 R
22. TmIavg (^{0}F): 113
23. TmOavg (^{0}F): 94
24. Tmavg (^{0}F): 104
25. Tmavg (^{0}R): 564 R

Run #1

26. Pm: ~~29.88~~

27. Ps: ~~29.88~~ 29.57

28. V_{lc}: 18.52

3. Impinger Data

Final	103	100	0	215.52 g
Initial	100	100	0	200 g.
Difference	3	0	0	15.52
			Total difference	18.52

4. Fyrite Data

Run

% Carbon Dioxide = 0 %

% Oxygen = 21.9%

% Carbon Monoxide =

Excess Air (ea) = $(\%O_2) - 0.5(\%CO)/0.264(\%N_2) - (\%O_2) + 0.5(\%CO)$

=

$M_d = \frac{-0.44(\%CO_2) + 0.32(O_2) + 0.28(\%N_2 + \%CO)}{}$

$= +0.32 \times 21.9 + 0.28(78.1)$

$= 28.88$

$M_s = M_d(1-B_{wo}) + 18(B_{wo})$

$= (28.88)(0.983) + 18(0.017)$

$= \boxed{28.70}$

5. Filter Data 101

Run

	Filter	H O Fraction	Acetone Fraction	Acetone Blank	Filter Blank
Final wt	0.7270		83.2416	85.3740	0.6989
Initial wt	0.7011		83.2375	85.3728	0.6989
Difference	0.0259		0.0041	0.0012	0.0000
Corr.	-0-		+0.0012		
Sample wt	0.0259		0.0053		

Total weight 0.0312

101/1

Run No. _____

1, Average Dry Gas Meter Temperature:
Average Orifice Pressure Drop:
Average ΔH:

2, Dry Gas Volume:

$$Vmstd = 17.64 * Ym * Y \left(\frac{Pbar + \Delta H/13.6}{Tm}\right) = 17.64 * 51.154 * 1.05 * \frac{30.02}{564}$$

$$= \boxed{50.431}$$

3, Volume of water vapor:
$Vwstd = 0.04707\ ft3/ml * Vlc = 0.04707 * 18.52$
$= 0.871$

4, Moisture Content:

$$Bwo = \frac{Vwstd}{Vwstd + Vmstd} \quad \frac{0.871}{(0.871 + 50.431)}$$

$$= \boxed{0.017}$$

5, Concentration in gr/SCF:
$Cs = (0.0154\ gr/mg)(Mn/Vmstd) = 0.0154 * \frac{31.2}{50.431}$
$= \boxed{0.0095}$

6, Concentration in lb/ft3:
$Cs = 2.205 * 10^{-6} (Mn/Vmstd) = 2.205 * 10^{-6}$
$= \boxed{1.36 * 10^{-6}}$

7, Stack Gas Velocity:

$$Vsavg. = (85.49)(Cp)(\Delta Pavg)\left(\frac{Ts\ avg}{PsMs}\right)^{.5} = (85.49)(0.84)(0.424)\left(\frac{535}{29.88 * 28.70}\right)^{.5}$$

$$= \boxed{24.049}$$

8, Stack Gas Volumetric Flowrate:

$$Qs = 3600\ (1-Bws)\ (Vs)\ (A)\ \frac{Tstd}{Tsavg}\ \frac{Ps}{Pstd} = (3600)(0.983)(24.049)(5.77)\left(\frac{528}{535}\right)\left(\frac{29.}{29.}\right)$$

$$= \boxed{~~7321237~~\ 478959}$$

9, Pollutant Mass Emission Rate, lb/hr:
$PMRs = (Qs)(Cs) = ~~7321237~~ * 1.36 * 10^{-6}$
$= \boxed{~~9.96~~\ 0.651}\ 478959$

10, Percent ~~Isokinetic~~:

$$I = (0.09450)\ \frac{Ts\ Vmstd}{PsVsAn\ \theta\ (1-Bws)} = \frac{(0.0945)(535)(50.431)}{(29.57)(24.049)(0.000507)(72)(0.983)}$$

$$= \boxed{99.91\%}$$

Plant Hercules 601
Location Hattiesburg
Operator DM/JW
Date 24 May 88
Run no. # 2
Sample box no 002

Meter box no 001
Meter H@ 1.83
C factor 1.14
Pitot tube coefficient, Cp 0.84

Ambient temperature 87
Barometric pressure 29.88
Assumed moisture, % 2
Probe length, (ft) 6
Nozzle identification no .305
Average calibrated nozzle diameter, cm (in) .305
Probe heater setting 0
Leak rate m³/min, (cfm) <0.01
Probe liner material SS
Static pressure, mm. Hg (in. Hg) 29.57
Filter No.

SCHEMATIC OF STACK CROSS SECTION

Start Time: 1305 hrs

End Time: 1420 hrs

T.R #	Sample time (min)	Vacuum (in. Hg)	Stack temp. (°F) (Ts)	Velocity head (in) (p)	Pressure differ across orific meter	Gas sample volume (cf)	Gas Sample temp. @ dry gas meter Inlet (°F)	Gas Sample temp. @ dry gas meter Outlet (°F)	Filter holder temp. (°F)	Temp. of gas leaving condenser or last impinger (°F)
Initial			✓	✓	✓	680.793	✓	✓		
1	3 min	2.0	86	.18	1.85	682.82	106	104	Ambient	<65
2	3 min	2.0	88	.18	1.85	684.96	112	106	Ambient	<65
3	3 min	2.5	84	.20	2.05	687.23	115	106	Ambient	<65
4	3 min	2.5	87	.19	1.95	689.51	119	106	Ambient	<65
5	3 min	2.5	88	.19	1.95	691.83	122	106	Ambient	<65
6	3 min	2.5	88	.20	2.05	694.02	124	106	Ambient	<65
7	3 min	2.0	88	.18	1.85	696.42	126	107	Ambient	<65
* 8	3 min	2.0	88	.16	1.65	698.45	122	107	Ambient	<65
9	3 min	1.5	88	.14	1.45	700.41	120	107	Ambient	<65
10	3 min	1.5	86	.12	1.22	702.29	122	107	Ambient	<65
11	3 min	1.5	88	.12	1.22	704.12	123	108	Ambient	<65
12	3 min	1.5	89	.11	1.12	705.95	123	108	Ambient	<65
13	3 min	2.0	89	.16	1.65	708.03	118	107	Ambient	<65
14	3 min	2.0	90	.16	1.65	710.14	121	108	Ambient	<65
15	3 min	2.0	90	.16	1.65	712.25	124	108	Ambient	<65
16	3 min	2.0	88	.17	1.75	714.37	126	109	Ambient	<65
17	3 min	2.0	87	.17	1.75	716.53	127	110	Ambient	<65
18	3 min	2.0	85	.18	1.85	718.71	126	110	Ambient	<65
19	3 min	2.5	85	.19	1.95	720.96	127	110	Ambient	<65
20	3 min	2.5	84	.19	1.95	723.23	127	109	Ambient	<65
21	3 min	2.0	83	.18	1.85	725.51	126	109	Ambient	<65
22	3 min	2.0	83	.18	1.85	727.71	126	109	Ambient	<65
23	3 min	2.0	83	.16	1.65	729.84	124	108	Ambient	<65
→ 24	3 min	1.5	83	.12	1.22	731.792	124	108	Ambient	<65
24										
T.	72		2081	3.99	40.98		2930	2583		
Avg			86.7	0.166	1.71	50.999	122.08	107.63		

* 1325. Worker inadvertantly stopped flow in stack.

10/12

1. Summary of Field Data

Run

1. Ambient Temperature (F): 87
2. Weather: OVERCAST
3. Stack Height (ft): 8ft
4. Stack Area (ft): 5.77
5. Meter H@: 1.83
6. Pitot Correction Factor: 0.84
7. Nomograph C_f : 1.13
8. Probe Heater Setting: NA
9. Filter Box Temperature (F): Ambient
10. Last Impinger Temperature (F): <65
11. Sample Time/Point: 3
12. Points/Traverse: 24
13. Probe Length: 6
14. Nozzle Diameter: 0.305
15. V_m: 50.999
16. Pbar: 29.88
17. ΔP_{avg}: 0.166
18. $\sqrt{\Delta P_{avg}}$: 0.407
19. ΔH_{avg}: 1.71
20. Tsavg (°F): 87
21. Tsavg (°R): 557
22. TmIavg (°F): 122
23. TmOavg (°F): 107
24. Tmavg (°F): 114
25. Tmavg (°R): 575R

FC

26. Pm: 29.88

27. Pb: 29.57

28. V : 25.72

3. Impinger Data

Final	109 m/s	103 m/s	3 m/s	210.72 g
Initial	100 m/s	100 m/s	0	200.90 g
Difference	9	3	3	10.72
			Total difference	25.72

4. Fyrite Data

Run

% Carbon Dioxide = 0%

% Oxygen = 21.8%

% Carbon Monoxide =

Excess Air (ea) = $(\%O_2) - 0.5(\%CO)/0.264(\%N_2) - (\%o_2) + 0.5(\%CO)$

=

$M_d = 0.44(\%CO_2) + 0.32(O_2) + 0.28(\%N_2 + \%CO)$

$= (0.32 * 21.8) + (0.28 * 78.2)$

$\simeq 28.87$

$M_s = M_d(1-B_{wo}) + 18(B_{wo})$

$= (28.87)(0.976) + 18(0.0239)$

$\simeq 28.60$

5. Filter Data

Run

	Filter	H O Fraction	Acetone Fraction	Acetone Blank	Filter Blank
Final wt	0.7286		75.0765	85.3740	0.6989
Initial wt	0.7062		75.0730 ~~0.0035~~	85.3728	0.6989
Difference	0.0224		~~+0.0012~~	0.0012	0
Corr.	— 0 —		+0.0012		
Sample wt	0.0224		0.0047		
Total weight			0.0271		

Run No. 101/2

1. Average Dry Gas Meter Temperature:
   Average Orifice Pressure Drop:
   Average ΔH:

2. Dry Gas Volume:

$$Vmstd = 17.64 * Vm * Y \left(\frac{Pbar + \Delta H/13.6}{Tm}\right) = 17.64 * 50.999 * 1.05 * \frac{30.0\Phi}{575}$$

$$= \boxed{49.293}$$

3. Volume of Water Vapor:

$Vwstd = 0.04707\ ft^3/ml * Vlc = 0.04707 * 25.72$

1.21

4. Moisture Content:

$$Bwo = \frac{Vwstd}{Vwstd + Vmstd} = \frac{1.21}{(1.21 + 49.293)}$$

$$= \boxed{0.0239}$$

5. Concentration in gr/SCF:

$$Cs = (0.0154\ gr/mg)(Mn/Vmstd) = 0.0154 * \frac{27.1}{49.293}$$

$$= \boxed{0.0085}$$

6. Concentration in lb/ft3:

$$Cs = 2.205 \times 10^{-6} (Mn/Vmstd) = 2.205 * 10^{-6} * \frac{27.1}{49.293}$$

$$= 1.21 * 10^{-6}$$

7. Stack Gas Velocity:

$$Vsavg = (85.49)(Cp)(Pavg)\left(\frac{Ts\ avg}{PsMs}\right)^{.5} = 85.49 * 0.84 * 0.467 * \left(\frac{557}{29.57 * 28.60}\right)^{.5}$$

$$= \boxed{\cancel{29.227}\ 23.720}$$

8. Stack Gas Volumetric Flowrate:

$$Qs = 3600\ (1-Bws)\ (Vs)\ (A)\ \frac{Tstd}{Tsavg}\ \frac{Ps}{Pstd} = (3600)(0.976)\left(\frac{23.720}{\cancel{29.227}}\right)(5.77)\left(\frac{528}{557}\right)\left(\frac{29.}{29.}\right)$$

$$= \boxed{\cancel{555112}\ 450510}$$

9. Pollutant Mass Emission Rate, lb/hr:

$$PMRs = (Qs)(Cs) = 555112 * 1.214 * 10^{-6}$$

$$= \boxed{0.673}$$

10. Percent Isokinetic:

$$I = (0.09450)\frac{Ts\ Vmstd}{PsVsAn\ \theta\ (1-Bws)} = \frac{(0.0945)(557)(49.293)}{(29.57)(\cancel{29.227}\ 23.720)(0.000507)(72)(0.976)}$$

$$= \boxed{103.8\%}$$

Plant Hercules 101
Location Hattiesburg
Operator DM/JW
Date 24 May 88
Run no. # 3
Sample box no 021

Meter box no 001
Meter H@ 1.83
C factor 1.13
Pilot tube coefficient, Cp 0.84

Ambient temperature 82
Barometric pressure 29.88
Assumed moisture, % 2
Probe length, (ft) 6
Nozzle identification no .305
Average calibrated nozzle diameter, cm (in) .305
Probe heater setting 0
Leak rate m³/min, (cfm) < 0.01
Probe liner material SS
Static pressure, mm. Hg (in. Hg) 29.57
Filter No.

SCHEMATIC OF STACK CROSS SECTION

Start Time: 1449 hrs

End Time: 1603 hrs

T.A #	Sample time (min)	Vacuum (in. Hg)	Stack temp. (°F) (Ts)	Velocity head (in) (p)	Pressure differ across orific meter	Gas sample volume (cf)	Gas Sample temp. @ dry gas meter Inlet (°F)	Gas Sample temp. @ dry gas meter Outlet (°F)	Filter holder temp. (°F)	Temp. of gas leaving condenser or last impinger (°F)
Initial			✓	✓	✓	731.861	✓	✓		
1	3 min	3.5	82	.15	1.55	733.91	98	98	Ambient	< 65
2	3 min	4.0	81	.17	1.75	735.91	103	100	Ambient	< 65
3	3 min	4.0	81	.18	1.85	738.01	110	100	Ambient	< 65
4	3 min	4.5	81	.19	1.95	740.25	113	100	Ambient	< 65
5	3 min	4.5	80	.19	1.95	742.50	114	100	Ambient	< 65
6	3 min	4.5	78	.20	2.05	744.72	114	98	Ambient	< 65
7	3 min	4.5	76	.20	2.05	746.92	115	98	Ambient	< 65
8	3 min	4.5	75	.20	2.05	749.15	115	97	Ambient	< 65
9	3 min	4.5	75	.19	1.95	751.36	114	95	Ambient	< 65
10	3 min	4.5	74	.20	2.05	753.61	114	94	Ambient	< 65
11	3 min	4.0	74	.18	1.85	755.74	113	93	Ambient	< 65
12	3 min	4.0	74	.18	1.85	757.91	113	93	Ambient	< 65
13	3 min	4.5	70	.19	1.95	760.03	105	91	Ambient	< 65
14	3 min	4.5	70	.19	1.95	762.23	109	91	Ambient	< 65
15	3 min	4.5	70	.20	2.05	764.41	112	91	Ambient	< 65
16	3 min	4.5	72	.21	2.15	766.63	112	90	Ambient	< 65
17	3 min	4.5	73	.20	2.05	768.82	114	90	Ambient	< 65
18	3 min	5.0	73	.22	2.25	771.09	117	90	Ambient	< 65
19	3 min	4.5	73	.19	1.95	773.35	120	90	Ambient	< 65
20	3 min	4.0	73	.16	1.65	775.43	120	91	Ambient	< 65
21	3 min	3.5	73	.15	1.55	777.45	118	91	Ambient	< 65
22	3 min	3.0	73	.13	1.33	779.36	118	91	Ambient	< 65
23	3 min	3.0	74	.13	1.33	781.21	117	91	Ambient	< 65
24	3 min	3.0	74	.12	1.22	783.015	117	91	Ambient	< 65
24										
T.	72		1799	4.32	44.33		2715	2254		
Avg			74.96	0.18	1.85	51.154	113.13	93.92		

BONNER ANALYTICAL TESTING COMPANY
RT. 13, BOX 85
HATTIESBURG, MS. 39401
(601)264-2854

NOMOGRAPH DATA

PLANT Hercules

DATE 24 May 88

SAMPLING LOCATION Rm #3

CALIBRATED PRESSURE DIFFERENTIAL ACROSS ORIFICE, in. H O	H @	1.83
AVERAGE METER TEMPERATURE (AMBIENT + 2- f), F 82 25	T m avg.	107
PERCENT MOISTURE IN GAS STREAM BY VOLUME	B wo	2
BAROMETRIC PRESSURE AT METER, in. Hg	P m	29.88
STATIC PRESSURE IN STACK, in. Hg (P + 0.073 x STACK GUAGE PRESSURE in in. H O) m 29.88 + (.073)(-4.3) 2	P s	29.57
RATIO OF STATIC PRESSURE TO METER PRESSURE	s P m	.990
AVERAGE STACK TEMPERATURE, F	T s avg.	82
AVERAGE VELOCITY HEAD, in. H O 2	P avg.	.18
MAXIMUM VELOCITY HEAD, in. H O 2	P avg.	.25
A FACTOR		1.13
CALCULATED NOZZLE DIAMRTER, in.		.303
ACTUAL NOZZLE DIAMETER, in.		.305
REFERENCE P, in. H O 2		.185

10113

1. Summary of Field Data

Run

1. Ambient Temperature (F): 82
2. Weather: OVERCAST
3. Stack Height (ft): 8ft
4. Stack Area (ft): 5.77
5. Meter H@: 1.83
6. Pitot Correction Factor: 0.84
7. Nomograph C_f : 1.13
8. Probe Heater Setting: NA
9. Filter Box Temperature (F): Ambient
10. Last Impinger Temperature (F): <65
11. Sample Time/Point: 3
12. Points/Traverse: 24
13. Probe Length: 6
14. Nozzle Diameter: 0.305
15. V_m: 51.885
16. Pbar: 29.88
17. ΔPavg: 0.176
18. $\Delta P_{avg}^{.5}$: 0.419
19. ΔHavg: 1.81
20. Tsavg (°F): 87
960
21. Tsavg (°R): 557
22. TmIavg (°F): 115
23. TmOavg (°F): 97
24. Tmavg (°F): 106
25. Tmavg (°R): 566R

26. Pm: 29.88

27. Ps: 29.57

28. V : 22.03

3. Impinger Data

Final	105 m/s	102 m/s	2 m/s	213.03 g.
Initial	100 m/s	100 m/s	0	200 g.
Difference	3	2	2	13.03
			Total difference	22.03

4. Fyrite Data

Run

% Carbon Dioxide = 0% ~~NA~~

% Oxygen = ~~NA~~ 21.9%

% Carbon Monoxide =

Excess Air (ea) = $(\%O_2) - 0.5(\%CO)/0.264(\%N_2) - (\%o_2) + 0.5(\%CO)$

=

$M_d = 0.44(\%CO_2) + 0.32(O_2) + 0.28(\%N_2 + \%CO)$

$= (0.32)(21.9) + (0.28)(78.1)$

$= 28.88$

$M_s = M_d(1-B_{wo}) + 18(B_{wo})$

$= (28.88)(0.98) + 18(0.02)$

$= 28.65$

3

5. Filter Data

Run 3

	Filter	H O Fraction	Acetone Fraction	Acetone Blank	Filter Blank
Final wt	0.7325		82.1947	85.3740	0.6989
Initial wt	0.7016		82.1855	85.3728	0.6989
Difference	0.0309		0.0092	0.0012	-0-
Corr.	-0-		0.0012		
Sample wt	0.0309		0.0104		

Total weight 0.0413

Run No. 101/3

1, Average Dry Gas Meter Temperature:
Average Orifice Pressure Drop:
Average ΔH:

2, Dry Gas Volume:

$$Vmstd = 17.64 * Vm * Y \left(\frac{Pbar + \Delta H/13.6}{Tm}\right) = (17.64)(51.154)(1.05)\left(\frac{30.01}{566}\right)$$

$= 50.241$

3, Volume of water Vapor:
$Vwstd = 0.04707\ ft^3/ml * Vlc = 0.04707 * 22.03$

1.037

4, Moisture Content:

$$Bwo = \frac{Vwstd}{Vwstd + Vmstd} \quad \frac{1.037}{(1.037 + 50.241)}$$

$= 0.020$

5, Concentration in gr/SCF:
$Cs = (0.0154\ gr/mg)(Mn/Vmstd) = 0.0154 * \frac{41.3}{50.241}$

$= 0.0126$

6, Concentration in lb/ft3:
$Cs = 2.205 \times 10^{-6}\ (Mn/Vmstd)\ 2.205 * 10^{-6} * \frac{41.3}{50.241}$

$= 1.81 * 10^{-6}$

7, Stack Gas Velocity:

$$Vsavg. = (85.49)(Cp)(Pavg)\left(\frac{Ts\ avg}{PsMs}\right)^{.5} = (85.49)(0.84)(0.419)\left(\frac{557}{29.57 * 28.65}\right)^{.5}$$

$= 24.398$

8, Stack Gas Volumetric Flowrate:

$$Qs = 3600\ (1-Bws)\ (Vs)\ (A)\ \frac{Tstd}{Tsavg}\ \frac{Ps}{Pstd} = (3600)(0.98)(24.398)(5.77)\left(\frac{528}{557}\right)\left(\frac{29.5}{29.9}\right.$$

$= 465287$

9, Pollutant Mass Emission Rate, lb/hr:
$PMRp = (Qs)(Cs) = (465287)(1.81 * 10^{-6})$

$= 0.842$

10, Percent Isokinetic:

$$I = (0.09450)\ \frac{Ts\ Vmstd}{PsVsAn\ \theta\ (1-Bws)} = \frac{(0.0945)(557)(50.241)}{(29.57)(24.398)(0.000507)(72)(0.98)}$$

$= 102.5$

BONNER ANALYTICAL TESTING COMPANY
RT. 13, BOX 85
HATTIESBURG, MS. 39401
(601)264-2854

Pitot tube Calibration
Type S
Six foot (6) Pitot Tube

Date: 5/23/88 MSB

Point Number	P1	P2(a)	P2(b)	Cp
1	0.08	0.06	0.06	0.87
2	0.10	0.07	0.07	0.84
3	0.25	0.17	0.17	0.83
4	0.47	0.33	0.33	0.84
5	0.55	0.40	0.39	0.84
6	0.71	0.51	~~0.50~~ 51	0.84
7	0.87	0.~~62~~ 63	0.63	0.85
8	1.30	0.92	0.92	0.84

O/K

P2(a) = A leg of Pitot Tube
P2(b) = B leg of Pitot Tube
Cp = (P2/ P1) 1/2

BONNER ANALYTICAL TESTING COMPANY
RT. 13, BOX 85
HATTIESBURG, MS. 39401
(601)264-2854

Therometer and Pyrometer Calibration

Date: OK MSB 5/23/88

Temperature (Corrected)	Pyrometer	DGM* Inlet	DGM* Outlet	Last Impinge	Hot Box
60 F	60 F	60 F	60 F	60 F	60 F
110 F	110 F	110 F	110 F	110 F	110 F
125 F	~~125~~ 124 F	125 F	125 F	126 F	125 F
200 F	~~199~~ 200 F				200 F
300 F	301 F				301 F
500 F	500 F				
750 F	749 F				
800 F	801 F				

DGM* Inlet: Dry Gas Meter, Inlet

DGM* Outlet: Dry Gas Meter, Outlet

BONNER ANALYTICAL TESTING COMPANY
RT. 13, BOX 85
HATTIESBURG, MS. 39401
(601)264-2854

Probe Nozzle Calibration

5/23/88

Theoretical diameter 0.312 inches

Actual diameter (inches)

	001	002	003	004	005	006
	0.1795	0.2460	0.3050	0.3670	0.4295	0.4930
	0.1790	0.2460	0.3050	0.3670	0.4290	0.4940
	0.1795	0.2465	0.3055	0.3675	0.4300	0.4940
	0.1790	0.2460	0.3050	0.3685	0.4290	0.4945
	0.1790	0.2460	0.3050	0.3670	0.4290	0.4940
	0.1790	0.2460	0.3050	0.3675	0.4295	0.4945
	0.1790	0.2460	0.3050	0.3675	0.4295	0.4940
	0.1795	0.2465	0.3055	0.3680	0.4295	0.4940
AVG.	0.1790	0.2460	0.3050	0.3675	0.4295	0.4940

Field Check

.2465
.2460
5/23/88
.2465
.2460
.2460 ACMSB
.2460
.2460

0.0
0.3050
0.3050
0.3050
0.3055
0.3050

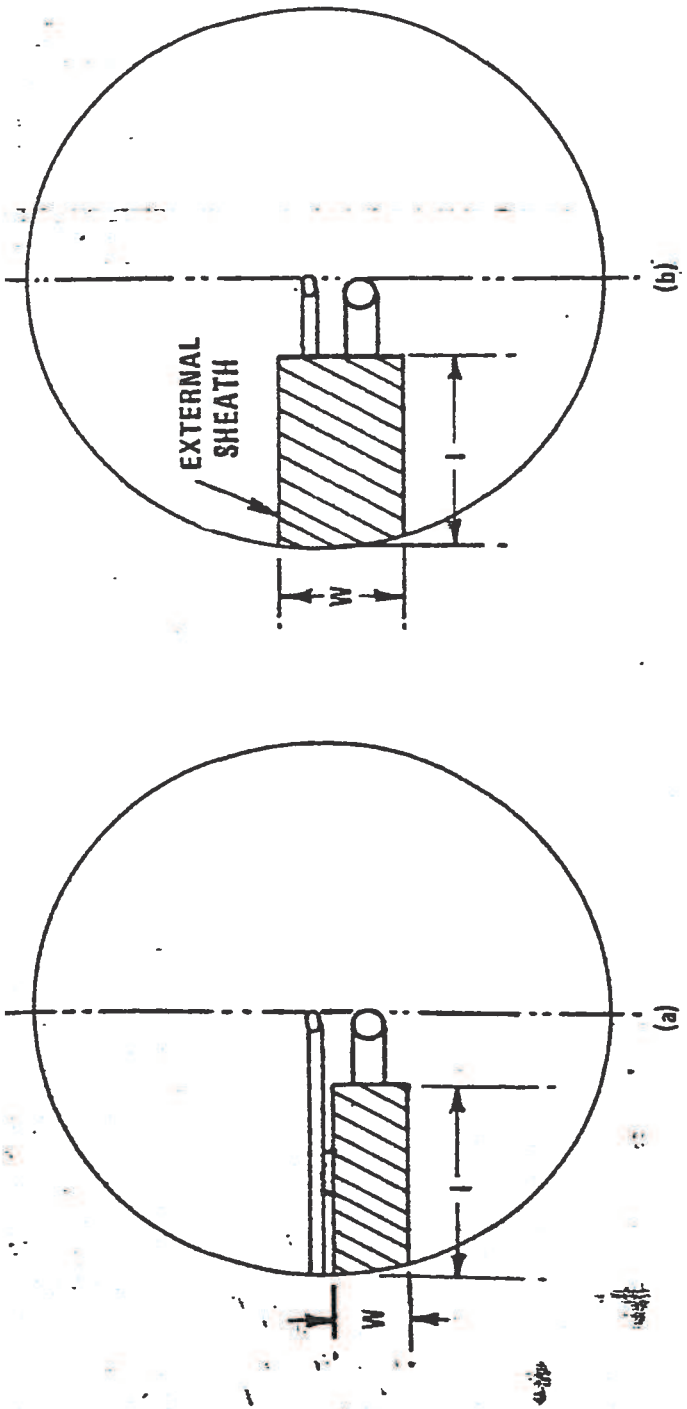

$$\text{ESTIMATED SHEATH BLOCKAGE (\%)} = \left[\frac{l \times W}{\text{DUCT AREA}}\right] \times 100$$

Figure 2-10. Projected-area models for typical pitot tube assemblies.

Figure 2-10. Projected-area models for typical pitot tube assemblies.

4.1.6 Field Use and Recalibration.

4.1.6.1 Field Use.

4.1.6.1.1 When a Type S pitot tube (isolated tube or assembly) is used in the field, the appropriate coefficient value (whether assigned or obtained by calibration) shall be used to perform velocity calculations. For calibrated Type S pitot tubes, the A side coefficient shall be used when the A side of the tube faces the flow, and the B side coefficient shall be used when the B side faces the flow; alternatively, the arithmetic average of the A and B side coefficient values may be used, irrespective of which side faces the flow.

4.1.6.1.2 When a probe assembly is used to sample a small duct (1½ to 36 in. in diameter), the probe sheath sometimes blocks a significant part of the duct cross-section, causing a reduction in the effective value of $C_{p(s)}$. Consult Citation 9 in Section 6 for details. Conventional pitot-sampling probe assemblies are not recommended for use in ducts having inside diameters smaller than 12 inches (Citation 16 in Section 6).

4.1.6.2 Recalibration.

4.1.6.2.1 Isolated Pitot Tubes. After each field use, the pitot tube shall be carefully reexamined in top, side, and end views. If the pitot face openings are still aligned within the specifications illustrated in Figure 2-2 or 2-3, it can be assumed that the baseline coefficient of the pitot tube has not changed. If, however, the tube has been damanged to the extent that it no longer meets the specifications of Figure 2-2 or 2-3, the damage shall either be repaired to restore proper alignment of the face openings or the tube shall be discarded.

4.1.6.2.2 Pitot Tube Assemblies. After each field use, check the face opening alignment of the pitot tube, as in Section 4.1.6.2.1; also, remeasure the intercomponent spacings of the assembly. If the intercomponent spacings have not changed and the face opening alignment is acceptable, it can be assumed that the coefficient of the assembly has not changed. If the face opening alignment is no longer within the specifications of Figures 2-2 or 2-3, either repair the damage or replace the pitot tube (calibrating the new assembly, if necessary). If the intercomponent spacings have changed, restore the original spacings or recalibrate the assembly.

4.2 Standard pitot tube (if applicable). If a standard pitot tube is used for the velocity traverse, the tube shall be constructed according to the criteria of Section 2.7 and shall be assigned a baseline coefficient value of 0.99. If the standard pitot tube is used as part of an assembly, the tube shall be in an interference-free arrangement (subject to the approval of the Administrator).

4.3 Temperature Gauges. After each field use, calibrate dial thermometers, liquid-filled bulb thermometers, thermocouple-potentiometer systems, and other gauges at a temperature within 10 percent of the average absolute stack temperature. For temperatures up to 405° C (761° F), use an ASTM mercury-in-glass reference thermometer, or equivalent, as a reference; alternatively, either a reference thermocouple and potentiometer (calibrated by NBS) or thermometric fixed points, e.g., ice bath and boiling water (corrected for barometric pressure) may be used. For temperatures above 405° C (761° F), use an NBS-calibrated reference thermocouple-potentiometer system or an alternate reference, subject to the approval of the Administrator.

If, during calibration, the absolute temperatures measured with the gauge being calibrated and the reference gauge agree within 1.5 percent, the temperature data taken in the field shall be considered valid. Otherwise, the pollutant emission test shall either be considered invalid or adjustments (if appropriate) of the test results shall be made, subject to the approval of the Administrator.

4.4 Barometer. Calibrate the barometer used against a mercury barometer.

5. *Calculations*

Carry out calculations, retaining at least one extra decimal figure beyond that of the acquired data. Round off figures after final calculation.

5.1 Nomenclature.

A = Cross-sectional area of stack, m^2 (ft^2).

B_{ws} = Water vapor in the gas stream (from Method 5 or Reference Method 4), proportion by volume.

C_p = Pitot tube coefficient, dimensionless.

K_p = Pitot tube constant,

$$34.97 \frac{m}{sec}\left[\frac{(g/g\text{-mole})(mm\ Hg)}{(°K)(mm\ H_2O)}\right]^{1/2}$$

for the metric system and

$$85.40 \frac{ft}{sec}\left[\frac{(lb/lb\text{-mole})(in.\ Hg)}{(°R)(in.\ H_2O)}\right]^{1/2}$$

for the English system.

M_d = Molecular weight of stack gas, dry basis (see Section 3.6) g/g-mole (lb/lb-mole).

M_s = Molecular weight of stack gas, wet basis, g/g-mole (lb/lb-mole).

$M_s = M_d(1-B_{ws}) + 18.0\ B_{ws}$

Flue Gases. Leatherhead, England, The British Coal Utilisation Research Association, 1961. p. 129-133.

12. Knapp, K.T. The Number of Sampling Points Needed for Representative Source Sampling. In: Proceedings of the Fourth National Conference on Energy and the Environment, Theodore, L., et al. (ed.). Dayton, Dayton Section of the American Institute of Chemical Engineers. October 3-7, 1976. p. 563-568.

METHOD 2—DETERMINATION OF STACK GAS VELOCITY AND VOLUMETRIC FLOW RATE (TYPE S PITOT TUBE)

1. *Principle and Applicability*

1.1 Principle. The average gas velocity in a stack is determined from the gas density and from measurement of the average velocity head with a Type S (Stausscheibe or reverse type) pitot tube.

1.2 Applicability. This method is applicable for measurement of the average velocity of a gas stream and for quantifying gas flow.

This procedure is not applicable at measurement sites which fail to meet the criteria of Method 1, Section 2.1. Also, the method cannot be used for direct measurement in cyclonic or swirling gas streams; Section 2.4 of Method 1 shows how to determine cyclonic or swirling flow conditions. When unacceptable conditions exist, alternative procedures, subject to the approval of the Administrator, U.S. Environmental Protection Agency, must be employed to make accurate flow rate determinations; examples of such alternative procedures are: (1) to install straightening vanes; (2) to calculate the total volumetric flow rate stoichiometrically, or (3) to move to another measurement site at which the flow is acceptable.

2. *Apparatus*

Specifications for the apparatus are given below. Any other apparatus that has been demonstrated (subject to approval of the Administrator) to be capable of meeting the specifications will be considered acceptable.

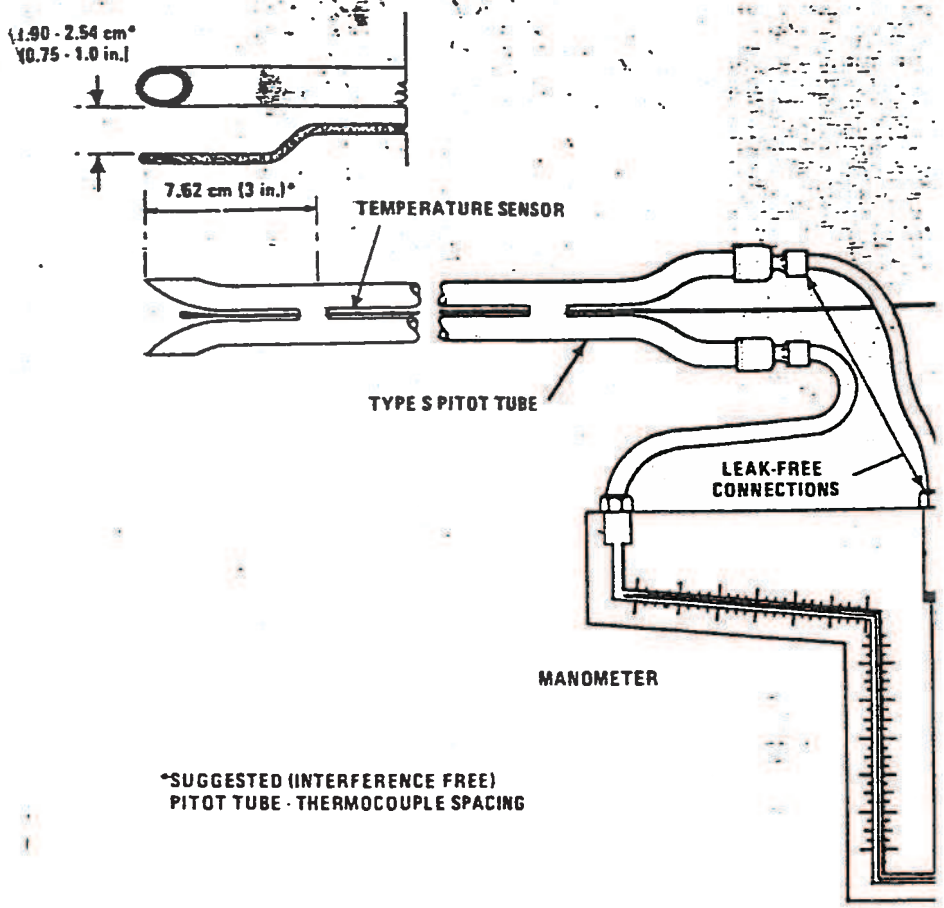

Figure 2-1. Type S pitot tube manometer assembly.

2.1 Type S Pitot Tube. The Type S pitot tube (Figure 2-1) shall be made of metal tubing (e.g. stainless steel). It is recommended that the external tubing diameter (dimension D_t, Figure 2-2b) be between 0.48 and 0.95 centimeters (3/16 and 3/8 inch). There shall be an equal distance from the base of each leg of the pitot tube to its face-opening plane (dimensions P_A and P_B Figure 2-2b); it is recommended that this distance be between 1.05 and 1.50 times the external tubing diameter. The face openings of pitot tube shall, preferably, be aligne shown in Figure 2-2; however, slight alignments of the openings are permis (see Figure 2-3).

The Type S pitot tube shall have a kr coefficient, determined as outlined in tion 4. an identification number shall b signed to the pitot tube; this number be permanently marked or engraved or body of the tube.

Figure 2-4. Standard pitot tube design specifications.

3. *Procedure*

3.1 Set up the apparatus as shown in Figure 2-1. Capillary tubing or surge tanks installed between the manometer and pitot tube may be used to dampen Δp fluctuations. It is recommended, but not required, that a pretest leak-check be conducted, as follows: (1) blow through the pitot impact opening until at least 7.6 cm (3 in.) H_2O velocity pressure registers on the manometer; then, close off the impact opening. The pressure shall remain stable for at least 15 seconds; (2) do the same for the static pressure side, except using suction to obtain the minimum of 7.6 cm (3 in.) H_2O. Other leak-check procedures, subject to the approval of the Administrator may be used.

3.2 Level and zero the manometer. Because the manometer level and zero may drift due to vibrations and temper changes, make periodic checks during traverse. Record all necessary data as sl in the example data sheet (Figure 2-5).

3.3 Measure the velocity head and perature at the traverse points specifie Method 1. Ensure that the proper diff tial pressure gauge is being used for range of Δp values encountered (see Se 2.2). If it is necessary to change to a sensitive gauge, do so, and remeasure tl and temperature readings at each tra point. Conduct a post-test leak-check (datory), as described in Section 3.1 abo validate the traverse run.

3.4 Measure the static pressure in stack. One reading is usually adequate.

3.5 Determine the atmospheric pres

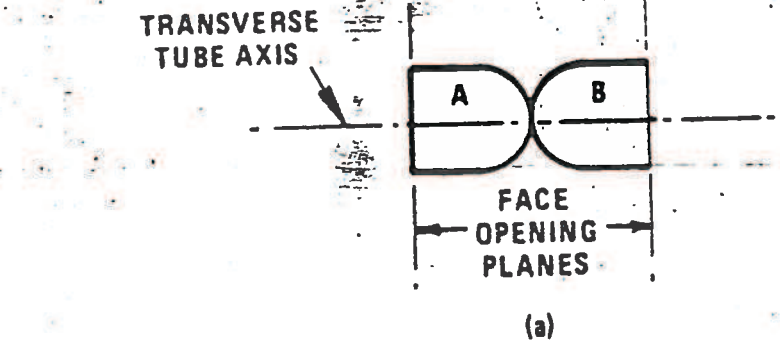

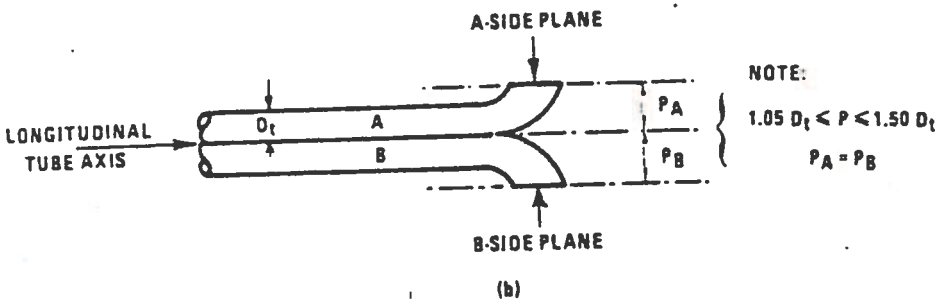

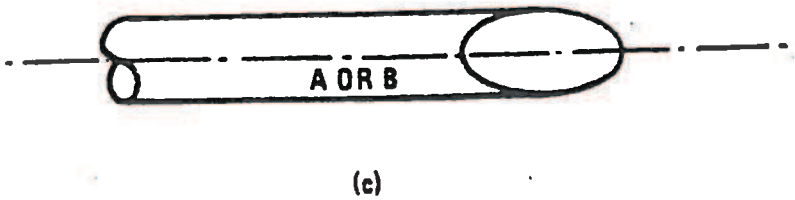

Figure 2-2. Properly constructed Type S pitot tube, shown in: (a) end view; face opening planes perpendicular to transverse axis; (b) top view; face opening planes parallel to longitudinal axis; (c) side view; both legs of equal length and centerlines coincident, when viewed from both sides. Baseline coefficient values of 0.84 may be assigned to pitot tubes constructed this way.

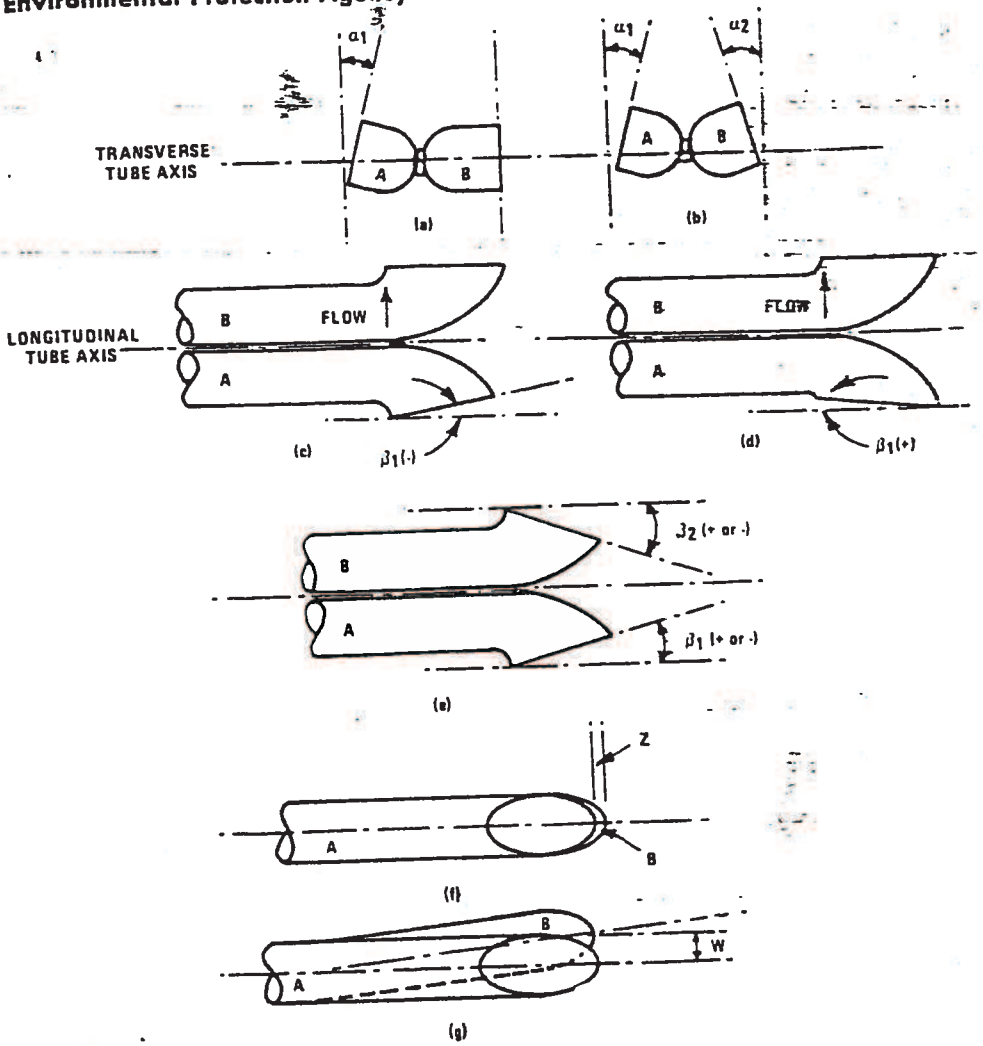

Figure 2-3. Types of face-opening misalignment that can result from field use or improper construction Type S pitot tubes. These will not affect the baseline value of Cp(s) so long as α1 and α2 10°, β1 and β 5°, z 0.32 cm (1/8 in.) and w 0.08 cm (1/32 in.) (citation 11 in Section 6).

A standard pitot tube may be used instead of a Type S, provided that it meets the specifications of Sections 2.7 and 4.2; note, however, that the static and impact pressure holes of standard pitot tubes are susceptible to plugging in particulate-laden gas streams. Therefore, whenever a standard pitot tube is used to perform a traverse, adequate proof must be furnished that the openings of the pitot tube have not plugged up during the traverse period; this can be done by taking a velocity head (Δp) reading at the final traverse point, cleaning out t impact and static holes of the standa pitot tube by "back-purging" with pressu ized air, and then taking another Δp rea ing. If the Δp readings made before a after the air purge are the same (±5 p cent), the traverse is acceptable. Otherwi reject the run. Note that if Δp at the fi traverse point is unsuitably low, anoth point may be selected. If "back-purging" regular intervals is part of the procedu then comparative Δp readings shall

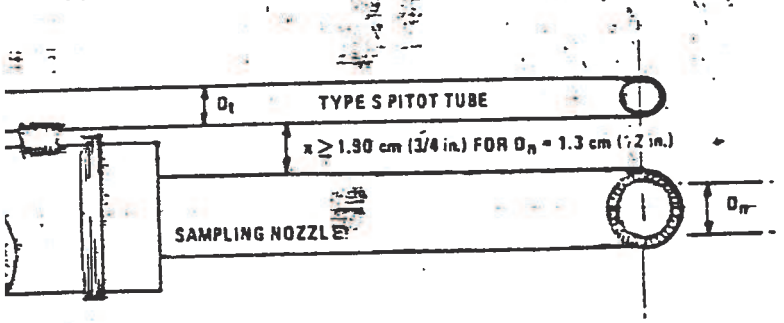

A. BOTTOM VIEW: SHOWING MINIMUM PITOT-NOZZLE SEPARATION.

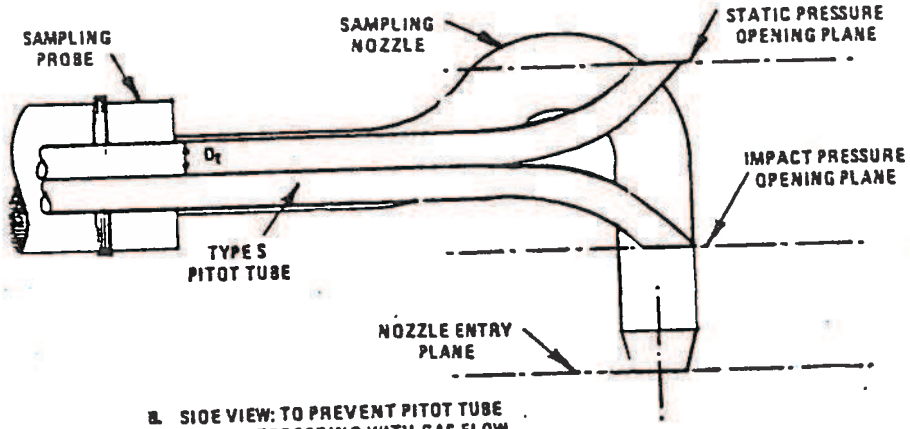

B. SIDE VIEW: TO PREVENT PITOT TUBE FROM INTERFERING WITH GAS FLOW STREAMLINES APPROACHING THE NOZZLE, THE IMPACT PRESSURE OPENING PLANE OF THE PITOT TUBE SHALL BE EVEN WITH OR ABOVE THE NOZZLE ENTRY PLANE.

Figure 2-7. Proper thermocouple placement to prevent interference; D_t between 0.48 and 0.95 cm (3/16 and 3/8 in.).

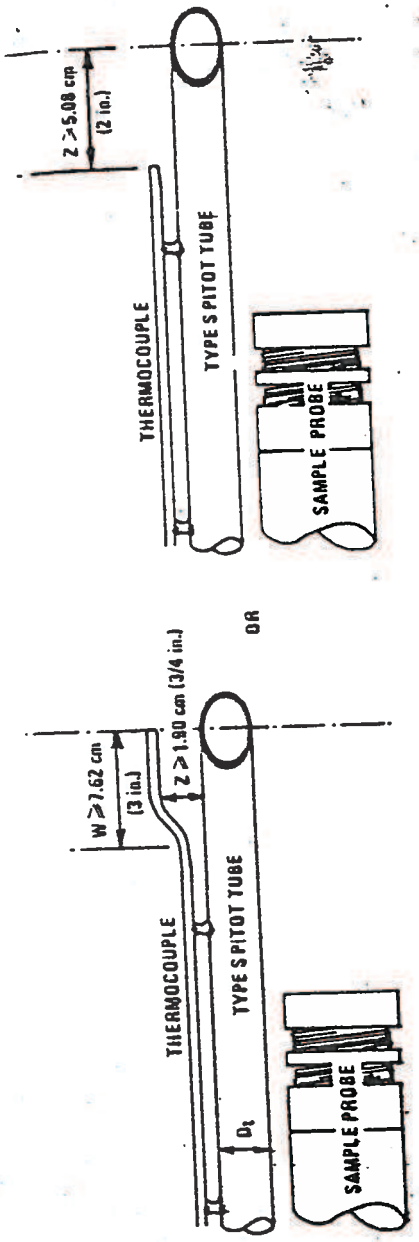

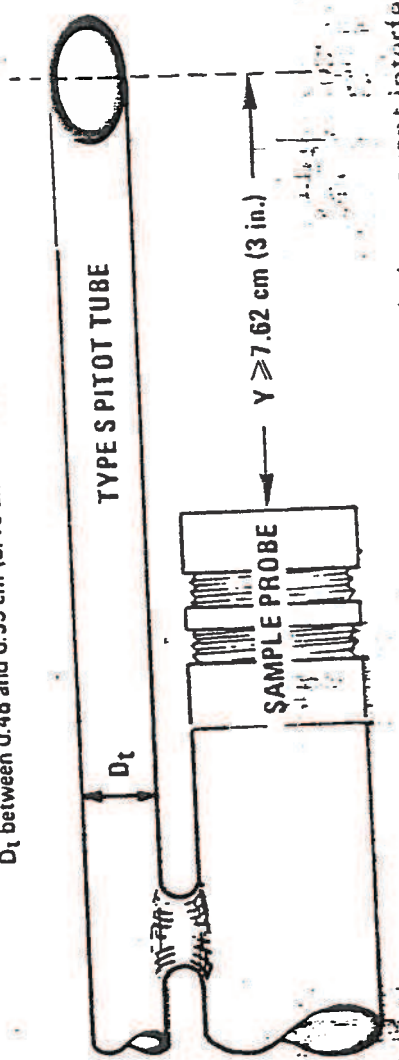

Figure 2-8. Minimum pitot-sample probe separation needed to prevent interference; D_t between 0.48 and 0.95 cm (3/16 and 3/8 in.).

MISSISSIPPI DEPARTMENT OF NATURAL RESOURCES
Bureau of Pollution Control
P.O. Box 10385
Jackson, Mississippi 39289-0385
(601) 961-5171

MEMORANDUM

TO: File

FROM: Jesse Thompson, Jr.

SUBJECT: Stack Test Review

DATE: June 2, 1989

Facility No. 110-0800-00001

The data submitted for the Neuphor effluent has been reviewed. EPA Method 25 was utilized for the sampling. The review did not reveal any problems. I recommend that the test be accepted.

JT:dfj

BONNER ANALYTICAL TESTING COMPANY
RT. 14, BOX 509
HATTIESBURG, MS 39402
(601) 264-2834

EPA METHOD 25

VOLATILE ORGANIC CARBON

Facility Hercules, Inc. - Hattiesburg, MS

Location 038 - Neuphor Effluent

Date 5/03/88 Operators MBB

Run # 1
Bag # 004
Trap # 004

Barometric Press (in Hg) 30.03

Ambient Temp. (F) 70

Wet Bulb 51 F
Dry Bulb 68 F
% Moisture <1

Sample Train Leak Rate (<1 cc/min) <1

Pretest Vacuum 30 in H_2O 0.30 in/min Leakrate (<1.6 in/min)

Post Test Vacuum 30 in H_2O 0.30 in/min Leakrate (<1.6 in/min)

DRY GAS METER

Meter # 75021

Meter Coef: 0.990

Date Calibrated 4/27/88

(Source Volumetric Flow Data)

	Time Clock/Sample	Mass Flow Meter Reading	Cubic feet	Dry Gas Meter Temp (F)	Static Press (in H_2O)
0	0915	115 cc/min	43.90	70	0.5
1	0925	115 cc/min	82.5	73	0.5
2	0935	115 cc/min	140.2	73	0.5
3	0945	115 cc/min	219.5	73	0.5
4	0955	115 cc/min	232.0	73	0.5
5	1005	115 cc/min	279.0	73	0.5
6	1015	115 cc/min	317.5	73	0.5
7					
8					
9					
10					
11					
12					
Total	60		273.6		
Average		115 cc/min		73 (533R)	0.5 (30.07)

BONNER ANALYTICAL TESTING COMPANY
RT. 14, BOX 509
HATTIESBURG, MS 39402
(601) 264-2854

BYRON METHOD 25 Lab Data Sheet

FACILITY Hercules, Inc.

LOCATION 038 Neuphor Effluent RUN # 1

Bag I.D. 004
Volume Collected 6.900 Volume Analyzed 6.900
if changed, why

Trap I.D. 004
Volume Collected 6.900 Burnout Volume 6.900

BAG ANALYSIS

Date 5/29/88 Analyst MSB/JP

				Average
NMHC	213	215	219	216
CO	27	24	24	25
CO_2	3038	3001	3079	3039
CH_4	147	155	155	152

TRAP ANALYSIS

Date 5/29/88 Temperature 300 C Analyst JP

				Average
NMHC	<3	<3	<3	<3
CO	27	27	32	29
CO_2	775	805	805	795
CH_4	<3	<3	<3	<3

General Comments

VOC = volatile organic carbon - This is the sum of the VOC collected in the trap plus any VOC that passes through the trap into the bag. In the analysis the bag portion is the BAG NMHC (nonmethane hydrocarbon); the trap is burned out and all the VOC converted to carbon dioxide prior to analysis thus the trap portion is the TRAP CO_2.

$$VOC_4 \text{ lb/hr} = \frac{(VOC\ BAG_{avg} + VOC\ TRAP_{avg})\ SCFH}{32 \times 10^5}$$

$$VOC_4 \text{ lb/hr} = \frac{(219 \text{ bag} + 795 \text{ trap})\ 289.7\ SCFH}{32 \times 10^5}$$

$$VOC_4 = 9.54 \times 10^{-5} \text{ lb/hr}$$

BONNER ANALYTICAL TESTING COMPANY
RT. 14, BOX 809
HATTIESBURG, MS 39401
(601) 264-2854

Facility Hercules, Inc.

Location 038 - Neubert Effluent

Run # 1

1. Standard Cubic Feet Per Run (Vms)

$$Vms = 17.647 \times Ym\ (Vmf - Vmi)\ \frac{(Pb + \frac{\Delta Pm}{13.6})}{Tm}$$

$$Vms = \frac{(17.647)(0.99)(273.6)(30.07)}{533}$$

$$= \boxed{269.7}$$

2. Standard Cubic Feet Per Hour (SCFH)

$$SCFH = \frac{Vms}{HR} = \boxed{269.7}$$

3. Gas Flow Rate

$$Qs = \frac{Vms}{\theta}$$

RT. 14, BOX 509
HATTIESBURG, MS 39402
(601) 264-2854

EPA METHOD 25

VOLATILE ORGANIC CARBON

Facility Hercules Inc

Location 038 Neuphon Effluent

Date 05/03/88 Operator MSB

Run # 1
Bag # 004
Trap # 004

Barometric Press (in Hg) 30.03

Ambient Temp. (F) 70

Wet Bulb 51°F
Dry Bulb 68°F
% Moisture <1

Sample Train Leak Rate ((1 cc/min) <1 cc/min

Pretest Vacuum 30 in H_2O 0.3 Leakrate ((1.6 in/min)

Post Test Vacuum 30 in H_2O 0.3 Leakrate ((1.6 in/min)

DRY GAS METER

Meter # 75021

Meter Coef: 0.990

Date Calibrated ~~5/4/27/88~~

	Time	Mass Flow	Source Volumetric Flow Data		
				Dry Gas Meter	Static
	Clock/Sample	Meter Reading	Cubic feet	Temp(F)	Press (in H_2O)
I	0915	115	43.90	70	0.5
1	0928	115	82.5	73	0.5
2	0935	115	140.2	73	0.5
3	0945	115	218.5	73	0.5
4	0955	115	232.0	73	0.5
5	1005	115	279.0	73	0.5
6	1015	115	317.5	73	0.5
7					
8					
9					
10					
11					
12					
Total	60		273.6		
Average		115		73 (533R)	0.5 (30.07)

6.900

BONNER ANALYTICAL TESTING COMPANY
RT. 14, BOX 509
HATTIESBURG, MS 39402
(601) 264-2854

BYRON METHOD 25 Lab Data Sheet

FACILITY ~~Neuphor~~ - Hercules Inc

LOCATION 038 Neuphor-Effluent RUN 1

Bag I.D. 004
Volume Collected 6.900 Volume Analyzed 6.900
if changed, why

Trap I.D. 004
Volume Collected 6.900 Burnout Volume 6.900

BAG ANALYSIS Date 05/29/88 Analyst MSB/JP

				Average
NMHC	213	215	219	216
CO	27	24	24	25
CO_2	~~147~~ 3038	3001	3079	3039
CH_4	147	155	155	152

TRAP ANALYSIS

Date 05/29/88 Temperature 300 Analyst

				Average
NMHC	<3	<3	<3	<3
CO	27	27	32	29
CO_2	775	805	805	795
CH_4	<3	<3	<3	<3

General Comments

VOC = volatile organic carbon - This is the sum of the VOC collected in the trap plus any VOC that passes through the trap into the bag. In the analysis the bag portion is the BAG NMHC (nonmethane hydrocarbon); the trap is burned out and all the VOC converted to carbon dioxide prior to analysis thus the trap portion is the TRAP CO_2.

$$VOC_t \text{ lb/hr} = \frac{(VOC\ BAG_{ave} + VOC\ TRAP_{ave})\ SCFH}{32 \times 10^6}$$

$$VOC_t \text{ lb/hr} = \frac{(219 \text{ bag} + 795 \text{ trap})\ 269.7\ SCFH}{32 \times 10^6}$$

VOC_t = $8.54 * 10^{-3}$ lb/hr

BONNER ANALYTICAL TESTING COMPANY
RT. 14, BOX 509
HATTIESBURG, MS 39401
(601) 264-2854

Facility Hercules Inc

Location 038 Neuphon Effluent

Run 1

1. Standard Cubic Feet Per Run (Vms)

$$Vms = 17.647 \times Ym \ (Vmf - Vmi) \ \frac{(Pb + \frac{DPm}{13.6})}{Tm}$$

$$Vms = 17.647 \times (0.99)(273.6)\left(\frac{30.07}{533}\right)$$

$$= 269.7$$

2. Standard Cubic Feet Per Hour (SCFH)

$$SCFH = \frac{Vms}{HR} \quad \frac{269.7}{1} = 269.7$$

3. Gas Flow Rate

$$Qs = \frac{Vms}{J}$$

SONNER ANALYTICAL TESTING COMPANY
RT. 14, BOX 509
HATTIESBURG, MS 39402
(601) 264-2854

EPA METHOD 25

VOLATILE ORGANIC CARBON

Facility Hercules, Inc. - Hattiesburg, MS

Location 038 - Neutner Effluent

Date 5/03/89 Operators JP/MSB

Run # 2
Bag # 006
Trap # 006

Barometric Press (in Hg) 30.03

Ambient Temp. (F) 73

Wet Bulb 52 F
Dry Bulb 62 F
% Moisture <1

Sample Train Leak Rate (<1 cc/min) <1

Pretest Vacuum 30 in H_2O 0.35 in/min Leakrate (<1.6 in/min)

Post Test Vacuum 30 in H_2O 0.35 in/min Leakrate (<1.6 in/min)

DRY GAS METER

Meter # 75021

Meter Coef: 0.99

Date Calibrated 4/27/88

Source Volumetric Flow Data

	Time Clock/Sample	Mass Flow Meter Reading	Dry Gas Meter Cubic feet	Dry Gas Meter Temp(F)	Static Press (in H2O)
1	1:05	130 cc/min	431.2	78	0.5
1	1:05	130 cc/min	477.3	79	0.5
2	1:05	130 cc/min	513.5	79	0.5
3	1:15	130 cc/min	560.0	82	0.3
4	1:25	130 cc/min	604.0	82	0.4
5	1:35	130 cc/min	652.3	83	0.5
6	1:45	130 cc/min	700.0	83	0.5
7					
8					
9					
10					
11					
12					
Total	60		268.8		
Average		130 cc/min		81 (64:3)	0.5 (30.07)

BONNER ANALYTICAL TESTING COMPANY
RT. 14, BOX 309
HATTIESBURG, MS 39402
(601) 264-2854

BYRON METHOD 25 Lab Data Sheet

FACILITY Hercules, Inc.

LOCATION 038 Neuber Effluent RUN # 2

Bag I.D. 006
Volume Collected 7.800 Volume Analyzed 7.800
if changed, why

Trap I.D. 006
Volume Collected 7.800 Burnout Volume

BAG ANALYSIS

Date 5/25/88 Analyst JF/MSB

				Average
NMHC	300	291	293	295
CO	46	46	44	45
CO_2	4969	5005	5022	4998
CH_4	206	194	197	199

TRAP ANALYSIS

Date 5/25/88 Temperature 300 C Analyst MSB/JF

				Average
NMHC	<3	<3	<3	<3
CO	26	26	26	26
CO_2	1764	1805	1777	1783
CH_4	<3	<3	<3	<3

General Comments

VOC = Volatile organic carbon - This is the sum of the VOC collected in the trap plus any VOC that passes through the trap into the bag. In the analysis the bag portion is the BAG NMHC (nonmethane hydrocarbon); the trap is burned out and all the VOC converted to carbon dioxide prior to analysis thus the trap portion is the TRAP CO_2.

$$VOC_A \text{ lb/hr} = \frac{(VOC\ BAG_{ave} + VOC\ TRAP_{ave})\ SCFM}{32 \times 10^6}$$

$$VOC_A \text{ lb/hr} = \frac{(\ 295\ \text{bag} + \ 1783\ \text{trap})\ \ 260.9\ SCFM}{32 \times 10^6}$$

$$VOC_A = \ 1.69 \times 10^{-3}\ \text{lb/hr}$$

BONNER ANALYTICAL TESTING COMPANY
RT. 14, BOX 509
HATTIESBURG, MS 39401
(601) 264-2854

Facility Hercules, Inc.

Location 039 - Neuphor Effluent

Run # 2

1. Standard Cubic Feet Per Run (Vms)

$$Vms = 17.647 \times Ym \, (Vmf - Vmi) \, \frac{(Pb + \frac{\Delta Pm}{13.6})}{Tm}$$

$$Vms = \frac{(17.647)(0.99)(268.8)(30.07)}{341}$$

$$= \boxed{260.9}$$

2. Standard Cubic Feet Per Hour (SCFH)

$$SCFH = \frac{Vms}{\theta R} = \boxed{260.9}$$

3. Gas Flow Rate

$$Qs = \frac{Vms}{\theta}$$

BONNER ANALYTICAL TESTING COMPANY
RT. 14, BOX 509
HATTIESBURG, MS 39402
(601) 264-2854

EPA METHOD 25

VOLATILE ORGANIC CARBON

Facility Hercules Inc

Location 038 Nemphos Effluent

Date 05/03/88 Operators MSB/JP

Run # 2
Bag # 006
Trap # 006

Barometric Press (in Hg) 30.03

Ambient Temp. (F) 73

Wet Bulb 52
Dry Bulb 68
% Moisture <1

Sample Train Leak Rate (<1 cc/min) <1

Pretest Vacuum 30 in H_2O 0.35 Leakrate (<1.6 in/min)

Post Test Vacuum 30 in H_2O 0.35 Leakrate (<1.6 in/min)

DRY GAS METER

Meter # 750211

Meter Coef: 0.99

Date Calibrated 04/27/88

	Time Clock/Sample	Mass Flow Meter Reading	Source Volumetric Flow Data: Cubic feet	Dry Gas Meter Temp(F)	Static Press (in H_2O)
I	1045	130	431.2	78	0.5
1	1055	130	477.5	79	0.5
2	1105	130	513.5	79	0.5
3	1115	130	560.0	82	0.5
4	1125	130	604.0	82	0.4
5	1135	130	652.5	83	0.5
6	1145	130	700.0	83	0.5
7					
8					
9					
10					
11					
12					
Total	60		268.8	81	
Average		130 cc/min		81 (541R)	0.5 (30.07)

7.800

BONNER ANALYTICAL TESTING COMPANY
RT. 14, BOX 509
HATTIESBURG, MS 39402
(601) 264-2854

BYRON METHOD 25 Lab Data Sheet

FACILITY Hercules Inc

LOCATION 038 Neuphar Eff. RUN 2

Bag I.D. 006
Volume Collected 7.800 Volume Analyzed 7.800
if changed, why

Trap I.D. 006
Volume Collected 7.800 Burnout Volume MS!

BAG ANALYSIS Date 5/25/88 Analyst MSB/JP

				Average
NMHC	300.	291	293	295
CO	46	46	44	45
CO_2	4968	5005	5022	4998
CH_4	206	194	197	199

TRAP ANALYSIS Date 5/25/88 Temperature 300 Analyst MSB/JP

				Average
NMHC	<3	<3	<3	<3
CO	26	26	26	26
CO_2	1766	1805	1777	1783
CH_4	<3	<3	<3	<3

General Comments

VOC = volatile organic carbon - This is the sum of the VOC collected in the trap plus any VOC that passes through the trap into the bag. In the analysis the bag portion is the BAG NMHC (nonmethane hydrocarbon); the trap is burned out and all the VOC converted to carbon dioxide prior to analysis thus the trap portion is the TRAP CO_2.

$$VOC_t \text{ lb/hr} = \frac{(VOC\ BAG_{ave} + VOC\ TRAP_{ave})\ SCFH}{32 \times 10^6}$$

$$VOC_t \text{ lb/hr} = \frac{(295 \text{ bag} + 1783 \text{ trap})\ 760.9\ (\cancel{764.9})\ SCFH}{32 \times 10^6}$$

VOC_t = ~~1.69×10^{-2}~~ / ~~1.72×10^{-2}~~ lb/hr.

BONNER ANALYTICAL TESTING COMPANY
RT. 14, BOX 509
HATTIESBURG, MS 39401
(601) 264-2854

Facility Hercules Inc

Location 038 Neuphor Eff

Run 2

1. Standard Cubic Feet Per Run (Vms)

$$Vms = 17.647 \times Ym\ (Vmf - Vmi)\ \frac{(Pb + \frac{DPm}{13.6})}{Tm}$$

$$(17.647)(0.99)(268.8)\ \frac{(30.07)}{533}$$

$$Vms = \frac{264.9}{541} \quad \boxed{260.9}$$

$$=$$

2. Standard Cubic Feet Per Hour (SCFH)

$$SCFH = \frac{Vms}{HR} = \boxed{264.9} \quad \boxed{260.9}$$

3. Gas Flow Rate

$$Qs = \frac{Vms}{J}$$

BONNER ANALYTICAL TESTING COMPANY
RT. 14, BOX 809
HATTIESBURG, MS 39402
(601) 264-2854

EPA METHOD 25

VOLATILE ORGANIC CARBON

Facility Hercules, Inc. - Hattiesburg, MS

Location 038 -- Neubner Effluent

Date 8/03/88 Operators MSB

Run # 3
Bag # 010
Trap # 010

Barometric Press (in Hg) 30.03

Ambient Temp. (F) 73

Wet Bulb 64
Dry Bulb 69
% Moisture <1

Sample Train Leak Rate (<1 cc/min) <1

Pretest Vacuum 30 in H_2O 0.35 in/min Leakrate (<1.6 in/min)

Post Test Vacuum 30 in H_2O 0.35 in/min Leakrate (<1.6 in/min)

DRY GAS METER

Meter # 7502:

Meter Coef: 0.990

Date Calibrated 4/27/88

	Time	Mass Flow	Source Volumetric Flow Data		
	Clock/Sample	Meter Reading	Dry Gas Meter Cubic feet	Temp (F)	Static Press (in H_2O)
1	1130	115 cc/min	744.2	85	0.5
1	1200	115 cc/min	793.5	85	0.5
2	1210	115 cc/min	844.3	85	0.5
3	1220	115 cc/min	902.5	58	0.5
4	1230	115 cc/min	954.5	87	0.1
5	1240	115 cc/min	1001.0	87	0.5
6	1250	115 cc/min	1045.9	86	
7					
8					
9					
10					
11					
12					
Total	60		300.9		
Average		115 cc/min		86 (546R)	0.4 (30.06)

BONNER ANALYTICAL TESTING COMPANY
RT. 14, BOX 509
HATTIESBURG, MS 39402
(601) 264-2854

BYRON METHOD 25 Lab Data Sheet

FACILITY Hercules, Inc.

LOCATION 038 Neutner Effluent RUN # 3

Bag I.D. 010
Volume Collected 6.900 Volume Analyzed 6.900
if changed, why

Trap I.D. 010
Volume Collected 6.900 Burnout Volume 6.900

BAG ANALYSIS

Date 5/29/88 Analyst WB/JP

				Average
NMHC	319	366	339	341
CO	76	82	79	79
CO_2	6700	6980	6882	6854
CH_4	211	224	211	215

TRAP ANALYSIS

Date 5/28/88 Temperature 300 C Analyst JP

				Average
NMHC	<3	<3	<3	<3
CO	<3	<3	<3	<3
CO_2	81	92	90	89
CH_4	<3	<3	<3	<3

General Comments

VOC = volatile organic carbon - This is the sum of the VOC collected in the trap plus any VOC that passes through the trap into the bag. In the analysis the bag portion is the BAG NMHC (nonmethane hydrocarbon), the trap is burned out and all the VOC converted to carbon dioxide prior to analysis thus the trap portion is the TRAP CO_2.

$$VOC_1 \text{ lb/hr} = \frac{(VOC\ BAG_{ave} + VOC\ TRAP_{ave})\ SCFH}{32 \times 10^5}$$

$$VOC_1 \text{ lb/hr} = \frac{(341 \text{ bag} + 88 \text{ trap})\ 269.3\ SCFH}{32 \times 10^5}$$

$$VOC_1 = 3.98 \times 10^{-3} \text{ lb/hr}$$

BONNER ANALYTICAL TESTING COMPANY
RT. 14, BOX 509
HATTIESBURG, MS 39401
(601) 264-2854

Facility Hercules, Inc.

Location 038 - Neuchor Effluent

Run # 3

1. Standard Cubic Feet Per Run (Vms)

$$Vms = 17.647 \times Ym\ (Vmf - Vmi)\ \frac{(Pb + \frac{\Delta Pm}{13.6})}{Tm}$$

$$Vms = (17.647)\ (0.99)\ (300.3)\ \frac{(30.06)}{546}$$

$$= \boxed{289.3}$$

2. Standard Cubic Feet Per Hour (SCFH)

$$SCFH = \frac{Vms}{HR} = \boxed{289.3}$$

3. Gas Flow Rate

$$Qs = \frac{Vms}{\theta}$$

RT. 14, BOX 509
HATTIESBURG, MS 39402
(601) 264-2854

EPA METHOD 25

VOLATILE ORGANIC CARBON

Facility Hercules Inc

Location 038 Neuphon Eff

Date 05/03/88 Operators JP/MSB

Run # 03
Bag # 010
Trap # 010

Barometric Press (in Hg) 30.03

Ambient Temp. (F) 73

Wet Bulb 54
Dry Bulb 69
% Moisture <1

Sample Train Leak Rate (<1 cc/min) <1

Pretest Vacuum 30 in H_2O 0.35 Leakrate (<1.6 in/min)

Post Test Vacuum 30 in H_2O 0.35 Leakrate (<1.6 in/min)

DRY GAS METER

Meter # 75021

Meter Coef: 0.99

Date Calibrated 04/27/88

	Time Clock/Sample	Mass Flow Meter Reading	Source Volumetric Flow Data: Cubic feet	Dry Gas Meter Temp(F)	Static Press (in H_2O)
I	1150	115	744.2	85	0.5
1	1200	115	793.5	85	0.5
2	1210	115	844.3	85	0.5
3	1220	115	902.5	85	0.5
4	1230	115	954.5	87	0.5
5	1240	115	1001.0	87	~~0.5~~ 0.1
6	1250	115	1045.0	86	~~0.5~~ 0.3 +0.5
7					
8					
9					
10					
11					
12					
Total	60		300.8 Cf		
Average		115		86 (546)	0.4 (30.06)
		0.900			

BONNER ANALYTICAL TESTING COMPANY
RT. 14, BOX 509
HATTIESBURG, MS 39402
(601) 264-2854

BYRON METHOD 25 Lab Data Sheet

FACILITY Hercules Inc

LOCATION 038 Neophor EFF RUN 3

Bag I.D. 010
Volume Collected 6.900 Volume Analyzed 6.900
if changed, why

Trap I.D. 010
Volume Collected 6.900 Burnout Volume 6.900

BAG ANALYSIS Date 5/24/88 Analyst MSB/JP

				Average
NMHC	318	366	339	341
CO	76	82	79	79
CO_2	6900	6980	6882	6854
CH_4	211	224	211	215

TRAP ANALYSIS

Date 5/28/88 Temperature 300° Analyst MSB/JP

				Average
NMHC	<3	<3	<3	<3
CO	<3	<3	<3	<3
CO_2	81	92	90	88
CH_4	<3	<3	<3	<3

General Comments

VOC = volatile organic carbon - This is the sum of the VOC collected in the trap plus any VOC that passes through the trap into the bag. In the analysis the bag portion is the BAG NMHC (nonmethane hydrocarbon); the trap is burned out and all the VOC converted to carbon dioxide prior to analysis thus the trap portion is the TRAP CO_2.

$$VOC_t \text{ lb/hr} = \frac{(VOC\ BAG_{ave} + VOC\ TRAP_{ave})\ SCFH}{32 \times 10^6}$$

$$VOC_t \text{ lb/hr} = \frac{(341 \text{ bag} + 88 \text{ trap})\ 289.3 \text{ SCFH}}{32 \times 10^6}$$

$VOC_t = 3.88 * 10^{-3}$

BONNER ANALYTICAL TESTING COMPANY
RT. 14, BOX 509
HATTIESBURG, MS 39401
(601) 264-2854

Facility Hercules Inc

Location 038 Neuphor Eff

Run 3

1. Standard Cubic Feet Per Run (Vms)

$$Vms = 17.647 \times Ym \, (Vmf - Vmi) \frac{(Pb + \frac{DPm}{13.6})}{Tm}$$

$$Vms = 17.647 * 0.99 * 3008 \left(\frac{30.06}{546}\right)$$

$$= \boxed{289.3}$$

2. Standard Cubic Feet Per Hour (SCFH)

$$SCFH = \frac{Vms}{HR} \quad = \boxed{289.3}$$

3. Gas Flow Rate

$$Qs = \frac{Vms}{J}$$

MISSISSIPPI DEPARTMENT OF NATURAL RESOURCES
Bureau of Pollution Control
P.O. Box 10385
Jackson, Mississippi 39289-0385
(601) 961-5171

MEMORANDUM

TO: File

FROM: Jesse Thompson, Jr.

SUBJECT: Stack Test Review

DATE: June 2, 1989

Facility No. 110-0800-00001

The test data submitted for the Neuphor 55 gallon drum has been finished. The drum was tested using EPA Method 25. No problems were noted. I recommend that the test be accepted.

JT:dfj

BONNER ANALYTICAL TESTING COMPANY
RT. 14, BOX 509
HATTIESBURG, MS 39402
(601) 264-2854

EPA METHOD 25

VOLATILE ORGANIC CARBON

Facility Hercules, Inc. - Hattiesburg, MS

Location Naugher - 55 Gallon Drum

Date 5/3/88 Operators JP/MSB

Run # 1
Bag # 013
Trap # 013

Barometric Press (in Hg) 30.02

Ambient Temp. (F) 70

Wet Bulb 51
Dry Bulb 68
% Moisture <1

Sample Train Leak Rate (<1 cc/min) <1.0 cc/min

Pretest Vacuum 30 in H_2O 0.35 in/min Leakrate (<1.6 in/min)

Post Test Vacuum 30 in H_2O 0.35 in/min Leakrate (<1.6 in/min)

DRY GAS METER

Meter # 3363323
Meter Coef. 0.991

	Time Block/Sample	Mass Flow Meter Reading	Source Volumetric Flow Data: ft/min	Dry Gas Meter Temp (F)	Static Press (in H_2O)
1	0920	100 cc/min	13.432	68	< 0.1
1	0930	100 cc/min	13.432	68	< 0.1
2	0940	100 cc/min	13.432	68	< 0.1
3	0950	100 cc/min	13.432	68	< 0.1
4	1000	100 cc/min	13.432	68	< 0.1
5	1010	100 cc/min	13.432	68	< 0.1
6	1020	100 cc/min	13.432	68	< 0.1
7					
8					
9					
10					
11					
12					
Total	60				
Average		100 cc/min		68	<0.1 (30.02

BONNER ANALYTICAL TESTING COMPANY
RT. 14, BOX 509
HATTIESBURG, MS 39402
(601) 264-2854

BYRON METHOD 25 Lab Data Sheet

FACILITY Hercules, Inc.

LOCATION Neupher 55 Gal Drum RUN # 1

Bag I.D. 013
Volume Collected 6.000 Volume Analyzed 6.000
if changed, why

Trap I.D. 013
Volume Collected 6.000 Burnout Volume 5.000

BAG ANALYSIS

Date 5/29/88 Analyst WSB/DP

				Average
NMHC	2077	2101	2037	2058
CO	<3	<3	<3	<3
CO_2	7437	7310	7505	7417
CH_4	347	339	341	342

TRAP ANALYSIS

Date 5/28/88 Temperature 300 C Analyst WSB/DP

				Average
NMHC	<3	<3	<3	<3
CO	<3	<3	<3	<3
CO_2	5420	5521	5315	5419
CH_4	<3	<3	<3	<3

General Comments

VOC = volatile organic carbon - This is the sum of the VOC collected in the trap plus any VOC that passes through the trap into the bag. In the analysis the bag portion is the BAG NMHC (nonmethane hydrocarbon); the trap is burned out and all the VOC converted to carbon dioxide prior to analysis thus the trap portion is the TRAP CO_2.

$$VOC_1 \text{ lb/hr} = \frac{(VOC\ BAG_{ave} + VOC\ TRAP_{ave})\ SCFH}{32 \times 10^6}$$

$$VOC_1 \text{ lb/hr} = \frac{(\ 2058\ \text{bag} + \ 5419\ \text{trap})\ 0.91\text{discharge}\ SCFH}{32 \times 10^6}$$

VOC_1 =

7477 PPM

BONNER ANALYTICAL TESTING COMPANY
RT. 14, BOX 509
HATTIESBURG, MS 39401
(601) 264-3354

Facility Hercules, Inc.

Location Neubher 55 Gal Drum

Run # 1

1. Standard Cubic Feet Per Run (Vms)

$$Vms = 17.647 \times Ym \ (Vmf - Vmi) \ \frac{(Pb + \frac{\Delta Pm}{13.6})}{Tm}$$

Vms = Zero Discharge

2. Standard Cubic Feet Per Hour (SCFH)

$$SCFH = \frac{Vms}{HR} = \text{Zero Discharge}$$

3. Gas Flow Rate

$$Qs = \frac{Vms}{\theta}$$

BONNER ANALYTICAL TESTING COMPANY
RT. 14, BOX 509
HATTIESBURG, MS 39402
(601) 264-2854

EPA METHOD 25

VOLATILE ORGANIC CARBON

Facility Hercules Inc

Location Neuphor - 55 Gal Drum

Date 5/3/88 Operators JP/MSB

Run # #1
Bag # 013
Trap # 013

Barometric Press (in Hg) 30.03

Ambient Temp. (F) 70

Wet Bulb 51
Dry Bulb 68
% Moisture <1

Sample Train Leak Rate ((1 cc/min) <1

Pretest Vacuum 30 in H_2O 0.35 in/min Leakrate ((1.6 in/min)

Post Test Vacuum 30 in H_2O 0.35 in/min Leakrate ((1.6 in/min)

DRY GAS METER

Meter # 3363323

Meter Coef: 0.991

Date Calibrated

	Time Clock/Sample	Mass Flow Meter Reading	Source Volumetric Flow Dat: Cubic feet	Dry Gas Meter Temp(F)	Static Press (in H_2O)
I	0920	100 cc/min	13.432	68	<0.1
1	0930	100	13.432	68	<0.1
2	0940	100	13.432	68	<0.1
3	0950	100	13.432	68	<0.1
4	1000	100	13.433	68	<0.1
5	1010	100	13.433	68	<0.1
6	1020	100	13.432		
7					
8					
9					
10					
11					
12					
Total	60		~~0.001 cf~~		
Average		100 cc/min 6.000		68	<0.1 30.03

BONNER ANALYTICAL TESTING COMPANY
RT. 14, BOX 509
HATTIESBURG, MS 39402
(601) 264-2854

BYRON METHOD 25 Lab Data Sheet

FACILITY Hercules Inc

LOCATION Neuphor 55 Gal Drum RUN 1

Bag I.D. ~~00~~ 013
Volume Collected 6.000 Volume Analyzed 6.000
if changed, why

Trap I.D. 013
Volume Collected 6.000 Burnout Volume 5.000

BAG ANALYSIS Date 5/29/ Analyst JP/MSII

				Average
NMHC	2077	2101	2037	2058
CO	<3	<3	<3	<3
CO_2	7437	7310	7505	7417
CH_4	347	339	341	342

TRAP ANALYSIS Date 5/28/88 Temperature 300 Analyst MSB/JP

				Average
NMHC	<3	<3	<3	<3
CO	<3	<3	<3	<3
CO_2	5420	5521	5315	5419
CH_4	<3	<3	<3	<3

General Comments

VOC = volatile organic carbon - This is the sum of the VOC collected in the trap plus any VOC that passes through the trap into the bag. In the analysis the bag portion is the BAG NMHC (nonmethane hydrocarbon); the trap is burned out and all the VOC converted to carbon dioxide prior to analysis thus the trap portion is the TRAP CO_2.

$$VOC_t \text{ lb/hr} = \frac{(VOC\ BAG_{ave} + VOC\ TRAP_{ave})\ SCFH}{32 \times 10^6}$$

VOC_t lb/hr = (2058 bag + 5419 trap) Zero Discharge SCFH

$$\frac{\qquad\qquad}{32 \times 10^6}$$

VOC_t = 7477 DDM

BONNER ANALYTICAL TESTING COMPANY
RT. 14, BOX 509
HATTIESBURG, MS 39401
(601) 264-2854

Facility Hercules Inc

Location Neuphor 55 GAL Drum

Run #1

1. Standard Cubic Feet Per Run (Vms)

$$Vms = 17.647 \times Ym \ (Vmf - Vmi) \ \frac{(Pb + \frac{DPm}{13.6})}{Tm}$$

Vms = Zero Discharge <0.061 CF

=

2. Standard Cubic Feet Per Hour (SCFH)

$$SCFH = \frac{Vms}{HR}$$ Zero Discharge <0.001CF

3. Gas Flow Rate

$$Qs = \frac{Vms}{J}$$

MISSISSIPPI DEPARTMENT OF NATURAL RESOURCES
Bureau of Pollution Control
P.O. Box 10385
Jackson, Mississippi 39289-0385
(601) 961-5171

MEMORANDUM

TO: File

FROM: Jesse Thompson, Jr.

SUBJECT: Stack Test Review

DATE: June 2, 1989

Facility No. 110-0800-00001-013

The review for emission point 013 has been finished. EPA Method 25 was used for the testing. There were no problems noted. I recommend that the test be accepted. The Pexite Plant oil scrubber was tested on May 21, 1988.

JT:dfj

BUNNER ANALYTICAL TESTING COMPANY
RT. 14, BOX 509
HATTIESBURG, MS 39402
(601) 264-2854

EPA METHOD 25

VOLATILE ORGANIC CARBON

Facility Hercules, Inc.

Location 013 - Pexite

Date 5/21/88 Operators DH/JP

Run # 1
Bag # 005
Trap # 005

Barometric Press (in Hg) 30.08

Ambient Temp. (F) 76

Wet Bulb 79
Dry Bulb 90
% Moisture <1

Sample Train Leak Rate (<1 cc/min) <1

Pretest Vacuum 30 in H_2O 0.30 in/min Leakrate (<1.6 in/min)

Post Test Vacuum 30 in H_2O 0.30 in/min Leakrate (<1.6 in/min)

DRY GAS METER

Meter # 75021

Meter Coef: 0.990

Date Calibrated 5/19/88

	Time Clock/Sample	Mass Flow Meter Reading	Source Volumetric Flow Data: Cubic feet	Dry Gas Meter Temp (F)	Static Press (in H_2O)
I	0925		1438	90	
1	0935	130 cc/min	1449	90	0.3
2	0945	130 cc/min	1457	90	0.3
3	0955	130 cc/min	1468	90	0.3
4	1005	130 cc/min	1504	90	0.3
5	1015	130 cc/min	1522	90	0.3
6	1025	130 cc/min	1567	90	0.6
7					
8					
9					
10					
11					
12					
Total	60		129 CF		
Average		130 cc/min (7.800)		90 (550R)	0.35 (30.10)

BONNER ANALYTICAL TESTING COMPANY
RT. 14, BOX 509
HATTIESBURG, MS 39402
(601) 264-2854

BYRON METHOD 25 Lab Data Sheet

FACILITY Hercules, Inc.

LOCATION 013 - Fexite RUN #1

Bag I.D. 005
Volume Collected 7.800 Volume Analyzed 7.800
if changed, why

Trap I.D. 005
Volume Collected 7.800 Burnout Volume 6.500

BAG ANALYSIS

Date 5/28/88 Analyst JP/MSB

				Average
NMHC	119466	117536	118840	118614
CO	2070	2152	2195	2139
CO_2	28979	27584	27940	28167
CH_4	1051	1095	1033	1060

TRAP ANALYSIS

Date 5/29/88 Temperature 300 C Analyst JP/MSB

				Average
NMHC	<3	<3	<3	<3
CO	<3	<3	<3	<3
CO_2	2860	2855	2804	2840
CH_4	<3	<3	<3	<3

General Comments

VOC = volatile organic carbon - This is the sum of the VOC collected in the trap plus any VOC that passes through the trap into the bag. In the analysis the bag portion is the BAG NMHC (nonmethane hyorocarbon); the trap is burned out and all the VOC converted to carbon dioxide prior to analysis thus the trap portion is the TRAP CO_2.

$$VOC_+ \text{ lb/hr} = \frac{(VOC\ BAG_{ave} + VOC\ TRAP_{ave})\ SCFH}{32 \times 10^6}$$

$$VOC_+ \text{ lb/hr} = \frac{(118614 \text{ bag} + 2840 \text{ trap})\ 123.33\ SCFH}{32 \times 10^6}$$

VOC_+ = 0.468 lb/hr.

BONNER ANALYTICAL TESTING COMPANY
RT. 14, BOX 509
HATTIESBURG, MS 39401
(601) 264-2854

Facility Hercules, Inc.

Location 013 - Pexite

Run #1

1. Standard Cubic Feet Per Run (Vms)

$$Vms = 17.647 \times Ym \ (Vmf - Vmi) \ \frac{\frac{\Delta Pm}{(Pb + 13.6)}}{Tm}$$

$$Vms = 17.647 \times 0.99 \times 129 \times \frac{30.10}{550}$$

$$= \boxed{123.33}$$

2. Standard Cubic Feet Per Hour (SCFH)

$$SCFH = \frac{Vms}{HR} = \boxed{123.33}$$

3. Gas Flow Rate

$$Qs = \frac{Vms}{\theta}$$

BONNER ANALYTICAL TESTING COMPANY
RT. 14, BOX 509
HATTIESBURG, MS 39402
(601) 264-2854

EPA METHOD 25

VOLATILE ORGANIC CARBON

Facility Hercules, Inc.

Location 013 - Pexite

Date 5/21/88 Operators MSB/JP

Run # 2
Bag # 007
Trap # 007

Barometric Press (in Hg) 30.08

Ambient Temp. (F) 77

Wet Bulb 77
Dry Bulb 94
% Moisture <1

Sample Train Leak Rate (<1 cc/min) <1

Pretest Vacuum 30 in H_2O 0.30 in/min Leakrate (<1.6 in/min)

Post Test Vacuum 30 in H_2O 0.30 in/min Leakrate (<1.6 in/min)

DRY GAS METER

Meter # 75021

Meter Coef: 0.990

Date Calibrated 5/19/88

	Time	Mass Flow	Source Volumetric Flow Data		
	Clock/Sample	Meter Reading	Dry Gas Meter Cubic feet	Dry Gas Meter Temp (F)	Static Press (in H_2O)
I	1030		1587		
1	1040	130 cc/min	1639	101	0.6
2	1050	130 cc/min	1655	94	0.5
3	1100	130 cc/min	1683	94	0.4
4	1110	130 cc/min	1699	94	0.4
5	1120	130 cc/min	1727	98	0.4
6	1130	130 cc/min	1756	102	0.4
7					
8					
9					
10					
11					
12					
Total	60		169 CF		
Average		130 cc/min (7.800)		97 (557R)	0.45 (30.11)

RT. 14, BOX 509
HATTIESBURG, MS 39402
(601) 264-2854

BYRON METHOD 25 Lab Data Sheet

FACILITY Hercules, Inc.

LOCATION 013 - Pexite RUN #2

Bag I.D. 007
Volume Collected 7.800 Volume Analyzed 7.600
if changed, why

Trap I.D. 007
Volume Collected 7.800 Burnout Volume 6.000

BAG ANALYSIS

Date 5/28/88 Analyst JP/MSB

				Average
NMHC	175233	173200	174400	174280
CO	<3	<3	<3	<3
CO_2	24690	23900	23950	24180
CH_4	840	800	800	810

TRAP ANALYSIS

Date 5/30/88 Temperature 300 C Analyst JP/MSB

				Average
NMHC	<3	<3	<3	<3
CO	<3	<3	<3	<3
CO_2	3339	3310	3298	3315
CH_4	<3	<3	<3	<3

General Comments

VOC = volatile organic carbon - This is the sum of the VOC collected in the trap plus any VOC that passes through the trap into the bag. In the analysis the bag portion is the BAG NMHC (nonmethane hydrocarbon); the trap is burned out and all the VOC converted to carbon dioxide prior to analysis thus the trap portion is the TRAP CO_2.

$$VOC_+ \text{ lb/hr} = \frac{(VOC\ BAG_{ave} + VOC\ TRAP_{ave})\ SCFH}{32 \times 10^6}$$

$$VOC_+ \text{ lb/hr} = \frac{(174280 \text{ bag} + 3315 \text{ trap})\ 159.60 \text{ SCFH}}{32 \times 10^6}$$

$$VOC_+ = 0.885 \text{ lb/hr.}$$

BONNER ANALYTICAL TESTING COMPANY
RT. 14, BOX 509
HATTIESBURG, MS 39401
(601) 264-2854

Facility Hercules, Inc.

Location 013 - Pexite

Run #2

1. Standard Cubic Feet Per Run (Vms)

$$Vms = 17.647 \times Ym \ (Vmf - Vmi) \ \frac{(Pb + \frac{\Delta Pm}{13.6})}{Tm}$$

$$Vms = 17.647 \times 0.99 \times 169 \times \frac{30.11}{557}$$

$$= \boxed{159.60}$$

2. Standard Cubic Feet Per Hour (SCFH)

$$SCFH = \frac{Vms}{HR} = \boxed{159.60}$$

3. Gas Flow Rate

$$Qs = \frac{Vms}{\theta}$$

RT. 14, BOX 509
HATTIESBURG, MS 39402
(601) 264-2854

EPA METHOD 25

VOLATILE ORGANIC CARBON

Facility Hercules, Inc.

Location 013 - Pexite

Date 5/21/88 Operators MSB/JF

Run # 3
Bag # 015
Trap # 015

Barometric Press (in Hg) 30.08

Ambient Temp. (F) _____

Wet Bulb 82
Dry Bulb 104
% Moisture <1

Sample Train Leak Rate (<1 cc/min) <1

Pretest Vacuum 30 in H_2O 0.30 in/min Leakrate (<1.6 in/min)

Post Test Vacuum 30 in H_2O 0.30 in/min Leakrate (<1.6 in/min)

DRY GAS METER

Meter # 75021

Meter Coef: 0.990

Date Calibrated 5/19/88

	Time	Mass Flow	Source Volumetric Flow Data:	Dry Gas Meter	Static
	Clock/Sample	Meter Reading	Cubic feet	Temp (F)	Press (in H_2O)
I	1135		1766		
1	1145	130 cc/min	1808	107	0.4
2	1155	130 cc/min	1849	104	0.5
3	1205	130 cc/min	1875	105	0.4
4	1215	130 cc/min	1910	107	0.4
5	1225	130 cc/min	1914	99	0.4
6	1235	130 cc/min	1926	100	0.3
7					
8					
9					
10					
11					
12					
Total	60		160 CF		
Average		130 cc/min (7.800)		104 (564R)	0.35 (30.11)

BYRON ANALYTICAL TESTING COMPANY
RT. 14, BOX 509
HATTIESBURG, MS 39402
(601) 264-2854

BYRON METHOD 25 Lab Data Sheet

FACILITY Hercules, Inc.

LOCATION 013 - Pexite RUN #3

Bag I.D. 015
Volume Collected 7.800 Volume Analyzed 7.800
if changed, why

Trap I.D. 015
Volume Collected 7.800 Burnout Volume 6.250

BAG ANALYSIS

Date 5/25/88 Analyst JP/MSB

				Average
NMHC	181666	179445	178366	179825
CO	147	141	137	142
CO_2	2547	2506	2498	2517
CH_4	43	43	42	43

TRAP ANALYSIS

Date 5/30/88 Temperature 300 C Analyst JP/MSB

				Average
NMHC	<3	<3	<3	<3
CO	<3	<3	<3	<3
CO_2	7512	7485	7591	7529
CH_4	<3	<3	<3	<3

General Comments

VOC = volatile organic carbon - This is the sum of the VOC collected in the trap plus any VOC that passes through the trap into the bag. In the analysis the bag portion is the BAG NMHC (nonmethane hydrocarbon); the trap is burned out and all the VOC converted to carbon dioxide prior to analysis thus the trap portion is the TRAP CO_2.

$$VOC_+ \text{ lb/hr} = \frac{(\text{VOC BAG}_{ave} + \text{VOC TRAP}_{ave})\ SCF}{32 \times 10^6}$$

$$VOC_+ \text{ lb/hr} = \frac{(179825 \text{ bag} + 7529 \text{ trap})\ 149.23 \text{ SCF}}{32 \times 10^6}$$

$$VOC_+ = 0.873 \text{ lb/hr.}$$

RT. 14, BOX 509
HATTIESBURG, MS 39401
(601) 264-2854

Facility Hercules, Inc.

Location 013 - Pexite

Run #3

1. Standard Cubic Feet Per Run (Vms)

$$Vms = 17.647 \times Ym \times (Vmf - Vmi) \frac{(Pb + \frac{\Delta P}{13.6})}{Tm}$$

$$Vms = 17.647 \times 0.99 \times 160 \times \frac{30.11}{564}$$

$$= \boxed{149.23}$$

2. Standard Cubic Feet Per Hour (SCFH)

$$SCFH = \frac{Vms}{HR} = \boxed{149.23}$$

3. Gas Flow Rate

$$Qs = \frac{Vms}{\theta}$$

BUNNER ANALYTICAL TESTING COMPANY
RT. 14, BOX 509
HATTIESBURG, MS 39402
(601) 264-2854

EPA METHOD 25

VOLATILE ORGANIC CARBON

Facility Hercules Inc

Location 013 Penite

Date 5/24/88 Operators DH/JP

Run # 1
Bag # 005
Trap # 005

Barometric Press (in Hg) 30.08

Ambient Temp. (F) 76

Wet Bulb 79
Dry Bulb 90
% Moisture 21

Sample Train Leak Rate (<1 cc/min) <1

Pretest Vacuum 30 in H_2O 0.30 in/min Leakrate (<1.0 in/min)

Post Test Vacuum 30 in H_2O 0.30 in/min Leakrate (<1.0 in/min)

DRY GAS METER

Meter # 75021

Meter Coef: 0.990

Date Calibrated 5/19/88

	Time Clock/Sample	Mass Flow Meter Reading	Source Volumetric Flow Data: Cubic feet	Dry Gas Meter Temp(F)	Static Press (in H_2O)
I	0925		1438	90	
1	0935	130	1449	90	0.3
2	0945	130	1457	90	0.3
3	0955	130	1468	90	0.3
4	1005	130	1504	90	0.3
5	1015	130	1522	90	0.3
6	1025	130 cc/min	1569	90	0.6
7					
8					
9					
10					
11					
12					

Total 60 129 cf

Average 130 cc/min 90 (SSOR) 0.35 (30.10)

7.800

BONNER ANALYTICAL TESTING COMPANY
RT. 14, BOX 509
HATTIESBURG, MS 39402
(601) 264-2854

BYRON METHOD 25 Lab Data Sheet

FACILITY Hercules Inc

LOCATION 013 Petit RUN /

Bag I.D. 005
Volume Collected 7.80C Volume Analyzed 7.808
if changed, why

Trap I.D. 005
Volume Collected 7.800 Burnout Volume 6.502

BAG ANALYSIS Date 5/28/88 Analyst JP/MSB

				Average
NMHC	119466	117536	118840	118614
CO	2090	2152	2195	2139
CO_2	28929	27584	27940	28167
CH_4	1051	1095	1033	1060

TRAP ANALYSIS Date 5/29/88 Temperature 300 C Analyst JP/MSB

				Average
NMHC	<3	<3	<3	<3
CO	<3	<3	<3	<3
CO_2	2860	2855	2804	2840
CH_4	<3	<3	<3	<3

General Comments

VOC = volatile organic carbon - This is the sum of the VOC collected in the trap plus any VOC that passes through the trap into the bag. In the analysis the bag portion is the BAG NMHC (nonmethane hydrocarbon); the trap is burned out and all the VOC converted to carbon dioxide prior to analysis thus the trap portion is the TRAP CO_2.

$$VOC_t \text{ lb/hr} = \frac{(VOC\ BAG_{ave} + VOC\ TRAP_{ave})\ SCFH}{32 \times 10^6}$$

$$VOC_t \text{ lb/hr} = \frac{(118614 \text{ bag} + 2840 \text{ trap})\ 123.33 \text{ SCFH}}{32 \times 10^6}$$

VOC_t = 0.468

BONNER ANALYTICAL TESTING COMPANY
RT. 14, BOX 509
HATTIESBURG, MS 39401
(601) 264-2854

Facility Hercules Inc

Location 013 Pentle

Run 1

1. Standard Cubic Feet Per Run (Vms)

$$Vms = 17.647 \times Ym \ (Vmf - Vmi) \ \frac{(Pb + \frac{DPm}{13.6})}{Tm}$$

$$Vms = 17.647 * 0.99 * 129 * \frac{30.10}{550}$$

$$= \boxed{123.33}$$

2. Standard Cubic Feet Per Hour (SCFH)

$$SCFH = \frac{Vms}{HR} \quad \boxed{123.33}$$

3. Gas Flow Rate

$$Qs = \frac{Vms}{J}$$

BONNER ANALYTICAL TESTING COMPANY
RT. 14, BOX 509
HATTIESBURG, MS 39402
(601) 264-2854

EPA METHOD 25

VOLATILE ORGANIC CARBON

Facility Hercules Inc

Location 013 Pexite

Date 5-21-88 Operators JP/MSB

Run # 2
Bag # 007
Trap # 007

Barometric Press (in Hg) 30.08

Ambient Temp. (F) 77

Wet Bulb 77
Dry Bulb 94
% Moisture 4

Sample Train Leak Rate (<1 cc/min) <1

Pretest Vacuum 30 in H_2O 0.30 in/min Leakrate (<1.5 in/min)

Post Test Vacuum 30 in H_2O 0.30 in/min Leakrate (<1.5 in/min)

DRY GAS METER

Meter # 75021

Meter Coef: 0.99

Date Calibrated 5/19/88

	Time Clock/Sample	Mass Flow Meter Reading	Source Volumetric Flow Data: Cubic feet	Dry Gas Meter Temp(F)	Static Press (in H_2O)
I	1030	130 cc/min	1587		
1	1040	130	1639	101	0.6
2	1050	130	1655	94	0.8
3	1100	130	1693	94	0.4
4	1110	130	1699	96	0.4
5	1120	130	1727	98	0.4
6	1130		1756	102	0.4
7					
8					
9					
10					
11					
12					
Total	60		169CF		
Average		130 cc/min		97 (557R)	0.45 (30.11)

1 of 1

BONNER ANALYTICAL TESTING COMPANY
RT. 14, BOX 509
HATTIESBURG, MS 39402
(601) 264-2854

BYRON METHOD 25 Lab Data Sheet

FACILITY Hercules Inc

LOCATION 013 Point RUN 2

Bag I.D. 007
Volume Collected 7.800 Volume Analyzed 7.800
if changed, why

Trap I.D. 007
Volume Collected 7.800 Burnout Volume 6.000

BAG ANALYSIS Date 5/28/88 Analyst JP/MSB

				Average
NMHC	175233	173200	174400	174280
CO	<3	<3	<3	~~8~~ <3
CO_2	24690	23900	23950	24180
CH_4	840	800	800	810

TRAP ANALYSIS Date 5/30/88 Temperature 300 Analyst JP/MSB

				Average
NMHC	<3	<3	<3	<3
CO	<3	<3	<3	<3
CO_2	3339	3310	3298	3315
CH_4	<3	<3	<3	<3

General Comments

VOC = volatile organic carbon - This is the sum of the VOC collected in the trap plus any VOC that passes through the trap into the bag. In the analysis the bag portion is the BAG NMHC (nonmethane hydrocarbon); the trap is burned out and all the VOC converted to carbon dioxide prior to analysis thus the trap portion is the TRAP CO_2.

$$VOC_t \text{ lb/hr} = \frac{(VOC\ BAG_{ave} + VOC\ TRAP_{ave})\ SCFH}{32 \times 10^6}$$

$$VOC_t \text{ lb/hr} = \frac{(174280 \text{ bag} + 3315 \text{ trap})\ 159.60 \text{ SCFH}}{32 \times 10^6}$$

VOC_t = .885

BONNER ANALYTICAL TESTING COMPANY
RT. 14, BOX 509
HATTIESBURG, MS 39401
(601) 264-2854

Facility Hercules Inc

Location 013 Perlite

Run 2

1. Standard Cubic Feet Per Run (Vms)

$$Vms = 17.647 \times Ym \ (Vmf - Vmi) \ \frac{(Pb + \frac{DPm}{13.6})}{Tm}$$

$$Vms = 17.647(.99)(169)\left(\frac{30.11}{557}\right)$$

$$= 159.60$$

2. Standard Cubic Feet Per Hour (SCFH)

$$SCFH = \frac{Vms}{HR} \quad 159.60$$

3. Gas Flow Rate

$$Qs = \frac{Vms}{J}$$

BONNER ANALYTICAL TESTING COMPANY
RT. 14, BOX 509
HATTIESBURG, MS 39402
(601) 264-2854

EPA METHOD 25

VOLATILE ORGANIC CARBON

Facility Hercules Inc

Location 013, Rexite

Date 5/21/88 Operators JP/MB

Run # ~~2~~ 3

Bag # 015

Trap # 015

Barometric Press (in Hg) 30.08

Ambient Temp. (F)

Wet Bulb 82

Dry Bulb 104

% Moisture <1

Sample Train Leak Rate (<1 cc/min) <1

Pretest Vacuum 30 in H_2O 0.30 in/min Leakrate (<1.6 in/min)

Post Test Vacuum 30 in H_2O 0.35 in/min Leakrate (<1.6 in/min)

DRY GAS METER

Meter # ~~78~~ 25021

Meter Coef: 0.99

Date Calibrated 5/19/88

	Time Clock/Sample	Mass Flow Meter Reading	Source Volumetric Flow Data: Cubic feet	Dry Gas Meter Temp(F)	Static Press (in H_2O)
I	1135	130 cc/min	1766		
1	1145	130	1808	107	0.4
2	1155	130	1849	104	0.5
3	1205	130	1878	105	0.4
4	1215	130	1910	107	0.4
5	1226	130	1914	98	0.1
6	1235	130	1926	100	0.3
7					
8					
9					
10					
11					
12					
Total	60		160		
Average		130 cc/min		104 (564R)	@.35 (30.11)

7.800

BONNER ANALYTICAL TESTING COMPANY
RT. 14, BOX 509
HATTIESBURG, MS 39402
(601) 264-2854

BYRON METHOD 25 Lab Data Sheet

FACILITY Hercules

LOCATION 013 Pepto RUN 3V

Bag I.D. 015
Volume Collected 7.800 Volume Analyzed 7.800
if changed, why

Trap I.D. 015
Volume Collected 7.800 Burnout Volume 6250

BAG ANALYSIS Date 5/25/88 Analyst JP/MEB

				Average
NMHC	181666	179445	178366	179825
CO	147	141	139	142
CO_2	2549	2506	2498	2517
CH_4	43	43	42	43

TRAP ANALYSIS Date 5/30/88 Temperature 300 Analyst JP/MEB

				Average
NMHC	<3	<3	<3	<3
CO	<3	<3	<3	<3
CO_2	7512	7485	7591	7529
CH_4	<3	<3	<3	<3

General Comments

VOC = volatile organic carbon - This is the sum of the VOC collected in the trap plus any VOC that passes through the trap into the bag. In the analysis the bag portion is the BAG NMHC (nonmethane hydrocarbon); the trap is burned out and all the VOC converted to carbon dioxide prior to analysis thus the trap portion is the TRAP CO_2.

$$VOC_t \text{ lb/hr} = \frac{(VOC\ BAG_{ave} + VOC\ TRAP_{ave})\ SCFH}{32 \times 10^6}$$

$$VOC_t \text{ lb/hr} = \frac{(179825 \text{ bag} + 7529 \text{ trap})\ 149.23 \text{ SCFH}}{32 \times 10^6}$$

VOC_t = 0.873

BONNER ANALYTICAL TESTING COMPANY
RT. 14, BOX 509
HATTIESBURG, MS 39401
(601) 264-2854

Facility Hercules

Location 013 Perm

Run 3'

1. Standard Cubic Feet Per Run (Vms)

$$Vms = 17.647 \times Ym \ (Vmf - Vmi) \ \frac{(Pb + \frac{DPm}{13.6})}{Tm}$$

$$Vms = 17.647 * 0.99 * 160 \ \frac{* 30.11}{564}$$

$$= \boxed{149.23}$$

2. Standard Cubic Feet Per Hour (SCFH)

$$SCFH = \frac{Vms}{HR} \ \boxed{149.23}$$

3. Gas Flow Rate

$$Qs = \frac{Vms}{J}$$

MISSISSIPPI DEPARTMENT OF NATURAL RESOURCES
Bureau of Pollution Control
P.O. Box 10385
Jackson, Mississippi 39289-0385
(601) 961-5171

MEMORANDUM

TO: File

FROM: Jesse Thompson, Jr.

SUBJECT: Stack Test Review

DATE: June 2, 1989

Facility No. 110-0800-00001-033

The Polypale Water Scrubber vents East and West were sampled on May 20, 1988. I have completed the review of the test data submitted and did not detect any problems. EPA Method 25 was used. I recommend that the test be accepted.

JF:dfj

BONNER ANALYTICAL TESTING COMPANY
RT. 14, BOX 509
HATTIESBURG, MS 39402
(601) 264-2854

EPA METHOD 25

VOLATILE ORGANIC CARBON

Facility Hercules, Inc. - Hattiesburg, MS

Location 033 Polypale Water Scrubber Vent - East

Date 5/20/88 Operators JLS/JP/MSB

Run # 1
Bag # 024
Trap # 024

Barometric Press (in Hg) 30.03

Ambient Temp. (F) 86

Wet Bulb 71
Dry Bulb 92
% Moisture <1

Sample Train Leak Rate (<1 cc/min) <1.0 cc/min

Pretest Vacuum 30 in H_2O 0.45 in/min Leakrate (<1.6 in/min)

Post Test Vacuum 30 in H_2O 0.45 in/min Leakrate (<1.6 in/min)

DRY GAS METER

Meter # 3363323

Meter Coef: 0.991

Date Calibrated 5/19/88

	Time	Mass Flow	Source Volumetric Flow Data		
	Clock/Sample	Meter Reading	Cubic feet	Dry Gas Meter Temp (F)	Static Press (in H_2O)
I	1400	150 cc/min	542.39	92	<0.1
1	1410	150 cc/min	543.50	94	<0.1
2	1420	150 cc/min	544.78	100	<0.1
3	1430	150 cc/min	545.78	100	<0.1
4	1440	150 cc/min	546.75	100	<0.1
5	1450	150 cc/min	545.78	98	<0.1
6	1500	150 cc/min	546.78	98	<0.1
7					
8					
9					
10					
11					
12					
Total	60		4.39 CF	682	
Average		150 cc/min (9.0001)		97 (557R)	<0.1 (30.03)

BONNER ANALYTICAL TESTING COMPANY
RT. 14, BOX 509
HATTIESBURG, MS 39402
(601) 264-2854

BYRON METHOD 25 Lab Data Sheet

FACILITY Hercules, Inc.

LOCATION 003 Polybale - RUN # 1

Bag I.D. 024
Volume Collected 9.000 Volume Analyzed 9.000
if changed, why

Trap I.D. 024
Volume Collected 9.000 Burnout Volume 5.000

BAG ANALYSIS

Date 5/30/88 Analyst MSB/JP

				Average
NMHC	4810	4957	4830	4866
CO	2905	2978	3006	2963
CO_2	56611	55508	56600	56240
CH_4	995	1055	1000	1017

TRAP ANALYSIS

Date 5/30/88 Temperature 300 C Analyst MSB/JP

				Average
NMHC	<3	<3	<3	<3
CO	<3	<3	<3	<3
CO_2	146	143	142	144
CH_4	<3	<3	<3	<3

General Comments

VOC = volatile organic carbon - This is the sum of the VOC collected in the trap plus any VOC that passes through the trap into the bag. In the analysis the bag portion is the BAG NMHC (nonmethane hydrocarbon); the trap is burned out and all the VOC converted to carbon dioxide prior to analysis thus the trap portion is the TRAP CO_2.

$$VOC_+ \text{ lb/hr} = \frac{(VOC\ BAG_{avg} + VOC\ TRAP_{avg})\ SCFM}{32 \times 10^6}$$

$$VOC_+ \text{ lb/hr} = \frac{(4866 \text{ bag} + 144 \text{ trap})\ 4.14\ SCFM}{32 \times 10^6}$$

$$VOC_+ = \boxed{6.48 \times 10^{-4} \text{ lb/hr.}}$$

BONNER ANALYTICAL TESTING COMPANY
RT. 14, BOX 509
HATTIESBURG, MS 39402
(601) 264-2854

Sulfur Dioxide

NIOSH Method
P & CAM 163

Facility Hercules, Inc.

Location 033 Polypale WSV - East

Date 5/20/88 Run Number 1 Operator JB/MSB/JP

1. Volume of air sampled (SCM) = V_m (STD)

$$V_{m(STD)} = V_m \left(\frac{29.92 \times T_{abs}}{P_{bar} \times 528}\right)^{0.5} \times 10^{-3}$$

$$= (36)\left(\frac{29.92 \times 557}{30.03 \times 528}\right)^{0.5} \times 10^{-3}$$

$$= \boxed{0.0369M^3}$$

2. Concentration of Sulfur Dioxide (mg/scm) = C (mg/scm)

$$C_{(mg/scm)} = \frac{(ml_t - ml_{blk})(N_{Bocl_4})(MW_{SO_2})}{V_m^3} \left(\frac{V}{Valiq}\right)$$

$$= \frac{(10.6)(0.01)(64)(50)}{(0.0369)(0.10)} = \boxed{91924 \text{ mg/scm}}$$

3. Concentration of (SO2) in (lb/scf) = C (lb/scf)

$$C_{(lb/scf)} = \frac{C_{(mg/scm)}}{1.602 \times 10^{7}}$$

$$= \frac{91924}{1.602 \times 10^{7}} = \boxed{5.738 \times 10^{-3} \text{ lb/scf}}$$

4. Mass Loading of SO2 = ml (lb/hr)

$$ml_{(lb/hr)} = C_{(lb/scf)} \times \frac{SCF}{MR}$$

$$= 5.738 \times 10^{-3} \times 4.14 = \boxed{2.38 \times 10^{-2} \text{ lb/hr}}$$

BONNER ANALYTICAL TESTING COMPANY
RT. 14, BOX 509
HATTIESBURG, MS 39401
(601) 264-2854

Facility Hercules, Inc.

Location 033 Polysale WSV -- East

Run # 1

1. Standard Cubic Feet Per Run (Vms)

$$Vms = 17.647 \times Ym \ (Vmf - Vmi) \ \frac{(Pb + \frac{\Delta Fm}{13.6})}{Tm}$$

$$Vms = (17.647)(0.991)(4.39)\left(\frac{30.03}{557}\right)$$

$$= \boxed{4.139}$$

2. Standard Cubic Feet Per Hour (SCFH)

$$SCFH = \frac{Vms}{HR} = \boxed{4.14}$$

3. Gas Flow Rate

$$Qs = \frac{Vms}{\theta}$$

BONNER ANALYTICAL TESTING COMPANY
RT. 14, BOX 509
HATTIESBURG, MS 39402
(601) 264-2854

EPA METHOD 25

VOLATILE ORGANIC CARBON

Facility Hercules, Inc. - Hattiesburg, MS

Location 033 Polypale Water Scrubber Vent - East

Date 5/20/88 Operators BLS/JP/MSB

Run # 2
Bag # 030
Trap # 030

Barometric Press (in Hg) 30.03

Ambient Temp. (F) 86

Wet Bulb 77
Dry Bulb 100
% Moisture <1

Sample Train Leak Rate (<1 cc/min) <1.0 cc/min

Pretest Vacuum 30 in H_2O 0.25 in/min Leakrate (<1.6 in/min)

Post Test Vacuum 30 in H_2O 0.25 in/min Leakrate (<1.6 in/min)

DRY GAS METER

Meter # 3362323

Meter Coef: 0.991

Date Calibrated 5/12/88

	Time Clock/Sample	Mass Flow Meter Reading	Source Volumetric Flow Rate: Dry Gas Meter Cubic feet	Temp (F)	Static Press (in H2O)
I	1520	100 cc/min	546.78	00	-0.1
1	1530	100 cc/min	546.79	00	-0.1
2	1540	100 cc/min	546.79	00	-0.1
3	1550	100 cc/min	546.79	100	-0.1
4	1600	100 cc/min	546.79	00	-0.1
5	1610	100 cc/min	546.79	00	-0.1
6	1620	100 cc/min	546.73	100	-0.1
7					
8					
9					
10					
11					
12					
Total	60		0.0: CF		
Average					

BONNER ANALYTICAL TESTING COMPANY
RT. 14, BOX 509
HATTIESBURG, MS 39402
(601) 264-2854

BYRON METHOD 25 Lab Data Sheet

FACILITY Hercules, Inc.

LOCATION 003 Polypale - East RUN # 2

Bag I.D. 030
Volume Collected 6.000 Volume Analyzed 6.000
if changed, why

Trap I.D. 030
Volume Collected 6.000 Burnout Volume 6.250

BAG ANALYSIS

Date 5/30/88 Analyst MSB/JF

				Average
NMHC	36842	36179	36154	36392
CO	1800	1767	1840	1803
CO_2	31174	30797	31004	30992
CH_4	490	481	477	479

TRAP ANALYSIS

Date 5/30/88 Temperature 300 C Analyst MSB/JF

				Average
NMHC	<3	<3	<3	<3
CO	<3	<3	<3	<3
CO_2	1643	1590	1691	1641
CH_4	<3	<3	<3	<3

General Comments

VOC = volatile organic carbon. This is the sum of the VOC collected in the trap plus any VOC that passes through the trap into the bag. In the analysis the gas portion is the BAG NMHC (nonmethane hydrocarbon); the trap is burned out and all the VOC converted to carbon dioxide prior to analysis thus the trap portion is the TRAP CO_2.

$$VOC_+ \text{ lb/hr} = \frac{(VOC\ BAG_{ave} + VOC\ TRAP_{ave}) \cdot SCFH}{32 \times 10^6}$$

$$VOC_+ \text{ lb/hr} = \frac{(36392 \text{ bag} + 1641 \text{ trap}) \cdot 0.0028 \cdot SCFH}{32 \times 10^6}$$

$$VOC_+ = 1.117 \times 10^{-5} \text{ lb/hr.}$$

BONNER ANALYTICAL TESTING COMPANY
RT. 14, BOX 509
HATTIESBURG, MS 39402
(601) 264-2854

Sulfur Dioxide

NIOSH Method
P & CAM 163

Facility Hercules, Inc.

Location 033 Polyvale WSV - East

Date 5/20/88 Run Number 2 Operator JS/MS3/JP

1. Volume of air sampled (SCM) = $V_m^{(STD)}$

$$V_m^{(STD)} = V_m \left(\frac{29.92 \times T_{obs}}{P_{bar} \times 528}\right)^{0.5} \times 10^{-3}$$

$$= (60)\left(\frac{29.92 \times 560}{528 \times 30.03}\right)^{0.5} \times 10^{-3}$$

$$= \boxed{0.0616}$$

2. Concentration of Sulfur Dioxide (mg/scm) = C (mg/scm)

$$C_{(mg/scm)} = \frac{(ml_t - ml_{blk})(N_{Bocl04})(MW_{SO2})}{V_m^3} \left(\frac{V}{Valiq}\right)$$

$$= \frac{(51.3)(0.01)(64)(50)}{(0.0616)(1)} = \boxed{26649 \text{ mg/scm}}$$

3. Concentration of (SO2) in (lb/scf) = C (lb/scf)

$$C_{(lb/scf)} = \frac{C_{(mg/scm)}}{1.602 \times 10^7}$$

$$= \frac{26649}{1.602 \times 10^7} = \boxed{1.66 \times 10^{-3} \text{ lb/scf}}$$

4. Mass Loading of SO2 = ml (lb/hr)

$$ml_{(lb/hr)} = C_{(lb/scf)} \times \frac{SCF}{nR}$$

$$= 1.66 \times 10^{-3} \times 0.0094 = \boxed{1.56 \times 10^{-5} \text{ lb/hr}}$$

BONNER ANALYTICAL TESTING COMPANY
RT. 14, BOX 509
HATTIESBURG, MS 39401
(601) 264-2854

Facility Hercules, Inc.

Location 033 Polybale WSV - East

Run # 2

1. Standard Cubic Feet Per Run (Vms)

$$Vms = 17.647 \times Ym(Vmf - Vm_1) \frac{(P_b + \frac{\Delta P_m}{13.6})}{Tm}$$

$$Vms = (17.647)(1.01)(0.01)\left(\frac{30.03}{560}\right)$$

$$= \boxed{0.0094}$$

2. Standard Cubic Feet Per Hour (SCFH)

$$SCFH = \frac{Vms}{HR} = \boxed{0.0094}$$

3. Gas Flow Rate

$$Qs = \frac{Vms}{\theta}$$

BONNER ANALYTICAL TESTING COMPANY
RT. 14, BOX 509
HATTIESBURG, MS 39402
(601) 264-2854

EPA METHOD 25

VOLATILE ORGANIC CARBON

Facility Hercules, Inc. - Hattiesburg, MS

Location 033 Polypale Water Scrubber Vent - East

Date 5/20/88 Operators JLS/JP/MSB

Run # 3
Bag # 034
Trap # 034

Barometric Press (in Hg) 30.03

Ambient Temp. (F) 98

Wet Bulb 70
Dry Bulb 95
% Moisture <1

Sample Train Leak Rate (<1 cc/min) <1.0 cc/min

Pretest Vacuum 30 in H_2O 0.2 in/min Leakrate (<1.6 in/min)

Post Test Vacuum 30 in H_2O 0.25 in/min Leakrate (<1.6 in/min)

DRY GAS METER

Meter # 3363323

Meter Coef: 0.991

Date Calibrated 5/19/88

	Time	Mass Flow	Source Volumetric Flow Data:		
	Clock/Sample	Meter Reading	Cubic Feet	Dry Gas Meter Temp (F)	Static Press (in H_2O)
I	1645	150 cc/min	546.72	95	<0.1
1	1655	150 cc/min	546.60	95	<0.1
2	1705	150 cc/min	546.60	95	<0.1
3	1715	150 cc/min	546.61	95	<0.1
4	1725	150 cc/min	546.61	95	<0.1
5	1735	150 cc/min	546.61	95	<0.1
6	1745	150 cc/min	546.61	95	<0.1
7					
8					
9					
10					
11					
12					
Total	60		0.01 CF		
Average		150 cc/min (9.000 l)		95 (555R)	0.1 (30.00)

BONNER ANALYTICAL TESTING COMPANY
RT. 14, BOX 509
HATTIESBURG, MS 39402
(601) 264-2854

BYRON METHOD 25 Lab Data Sheet

FACILITY Hercules, Inc.

LOCATION 003 Polypale - East RUN # 3

Bag I.D. 034
Volume Collected 9.000 Volume Analyzed 9.000
if changed, why

Trap I.D. 034
Volume Collected 9.000 Burnout Volume 4.700

BAG ANALYSIS

Date 5/30/88 Analyst MSB/JP

				Average
NMHC	13429	13951	13111	13497
CO	3332	3190	3256	3259
CO_2	59452	58322	60775	59516
CH_4	1109	1142	1105	1119

TRAP ANALYSIS

Date 5/28/88 Temperature 300 C Analyst MSB/JP

				Average
NMHC	<3	<3	<3	<3
CO	<3	<3	<3	<3
CO_2	703	726	681	704
CH_4	<3	<3	<3	<3

General Comments

VOC = volatile organic carbon - This is the sum of the VOC collected in the trap plus any VOC that passes through the trap into the bag. In the analysis the bag portion is the BAG NMHC (nonmethane hydrocarbon); the trap is purged out and all the VOC converted to carbon dioxide prior to analysis thus the trap portion is the TRAP CO_2.

$$VOC_+ \text{ lb/hr} = \frac{(\text{VOC BAG}_{ave} + \text{VOC TRAP}_{ave})\ \text{SCFH}}{32 \times 10^6}$$

$$VOC_+ \text{ lb/hr} = \frac{(13497 \text{ bag} + 704 \text{ trap})\ 0.0095\ \text{SCFH}}{32 \times 10^6}$$

$$VOC_+ = \frac{}{4.21 \times 10^{-6}\ \text{lb/hr.}}$$

BONNER ANALYTICAL TESTING COMPANY
RT. 14, BOX 509
HATTIESBURG, MS 39402
(601) 264-2854

Sulfur Dioxide

NIOSH Method
P & CAM 163

Facility Hercules, Inc.

Location 033 Polypale WSV - East

Date 5/20/88 Run Number 3 Operator JS/MSB/JP

1. Volume of air sampled (SCM) = V_m^3 (STD)

$$V_m^3 \text{ (STD)} = V_m \left(\frac{29.92 \times T_{obs}}{P_{bar} \times 528}\right)^{0.5} \times 10^{-3}$$

$$= (30)\left(\frac{29.92 \times 555}{30.03 \times 528}\right)^{0.5} \times 10^{-3}$$

$$= \boxed{0.037}$$

2. Concentration of Sulfur Dioxide (mg/scm) = C (mg/scm)

$$C\text{(mg/scm)} = \frac{(ml_t - ml_{olk})(N_{Boclo4})(MW_{SO2})}{V_m^3}\left(\frac{V}{V_{aliq}}\right)$$

$$= \frac{(10)(0.01)(64)(50)}{(0.0307)(0.1)} = \boxed{104{,}234}$$

3. Concentration of (SO2) in (lb/scf) = C (lb/scf)

$$C\text{(lb/scf)} = \frac{C\text{(mg/scm)}}{1.602 \times 10^{7}}$$

$$= \frac{104{,}234}{1.602 \times 7} = \boxed{6.506 \times 10^{-3} \text{ lb/scf}}$$

4. Mass Loading of SO2 = ml (lb/hr)

$$ml \text{ (lb/hr)} = C \text{ (lb/scf)} \times \frac{SCF}{HR}$$

$$= 6.506 \times 10^{-3} \times 0.0095 = \boxed{6.18 \times 10^{-5} \text{ lb/hr}}$$

FIELD DATA SHEET SULFUR DIOXIDE

Facility: Hercules, Inc.

Location: 033 Polypale - East

Date: 5/20/88 Operators JP/MSB/JS

Analyte: Sulfur Dioxide

	Run 1	Run 2	Run 3
Sample Temp (F	97	100	95
Barometric press (in Hg)	30.03	30.03	30.03
Ambient Temperature (F)	86	86	88
Sample flow rate l/min	0.600	1.00	0.500
Sample ID	033 e1/1-3	033 e2/1-3	033 e3/1-3
Start Time	1400	1520	1645
End Time	1500	1620	1745

FIELD DATA SHEET VOLATILE HYDROCARBONS

Facility: Hercules, Inc.

Location: 033 Polypale EAST

Date: 5/20/88 Operators JP/MSB/JS

Analyte: Toluene

	Run 1	Run 2	Run 3
Sample Temp (F	97	100	95
Barometric press (in Hg)	30.03	30.03	30.03
Ambient Temperature (F)	86	86	88
Sample flow rate	0.100	0.100	0.100
Bag ID	033 e/1	033 e/2	033 e/3
Start Time	1400	1520	1645
End Time	1500	1620	1745

Method 18

Facility: Hercules, Inc

Location: 033 Polypale East

Analyte: Toluene

1. Nanograms of standard injected @ STP (NGSTD)

$$NG_{(STD)} = NGobs \times \frac{(29.92 \times Tobs)^{0.5}}{Pbar \times 528}$$

STD1 = 250 X 1.002 = 25.

STD2 = 500 X 1.002 = 501

STD3 = 1000 X 1.002 = 1002

2. Concentration of Analyte mg/m³ @ STP CSTD

$$C_{STD} = \frac{AA \times 1 \times 10^{-3}}{Rf_{STD} \times Vi \times \frac{(29.92 \times Tobs)^{0.5}}{Pbar \times 528}}$$

Run 1 = $\frac{151246 \times 1 \times 10^{-3}}{570 \times 1 \times 10^{-4} \times 1.002}$ = 2648

Run 2 = $\frac{515358 \times 1 \times 10^{-3}}{570 \times 10^{-4} \times 1.002}$ = 9023

Run 3 = $\frac{415497 \times 1 \times 10^{-3}}{570 \times 10^{-4} \times 1.002}$ = 7275

3. Parts per million of Analyte @ STP (PPM)

$$PPM = C_{STD} \times \frac{24.05}{MW}$$

Run 1 2648 X $\frac{24.05}{92}$ = 692

Run 2 9023 X $\frac{24.05}{92}$ = 2358

Run 3 7275 X $\frac{24.05}{92}$ = 1902

4. Mass Loading of Analyte (STP) lb/hr (MSTD)

$$M_{STD} = \frac{C_{STD} \times SCFH}{1.6019 \times 10^{7}}$$

Run 1 = $\frac{2648 \times 4.14}{1.6019 \times 10^{7}}$ = 6.84×10^{-4}

Run 2 = $\frac{9023 \times 0.0094}{1.6019 \times 10^{7}}$ = 5.29×10^{-6}

Run 3 = $\frac{7275 \times 0.0095}{1.6019 \times 10^{7}}$ = 4.31×10^{-6}

Facility: Hercules, Inc. Method 18-GC/MS

Location: 033 Polypale East Sample Type Bag

Date: 5/20/88

Analyte: Toluene Operator: MSB/DM

Calibration Data: GC - GC/MS

	STANDARD	Amt (ng) STD	AREA			Ave Area	Ave Area/ng
1.	250	251	115090	135986	141250	130775	522
2.	500	501	291973	288456	297126	292518	585
3.	1000	1002	585763	566451	571224	574479	574
	1250		746001				597

Rf (STD) = 570

Sample	Area	Samp Vol. (L)	mg/m³ (STD)	PPM (STD)	lb/hr (STD)
Run 1A	154538	1 X 10⁻⁴			
1B	149422	1 X 10⁻⁴			
1C	149777	1 X 10⁻⁴			
Ave(AA)	151246	1 X 10⁻⁴	2648	6297	6.84 X 10⁻⁴
2A	522444	1 X 10⁻⁴			
2B	509873	1 X 10⁻⁴			
2C	513756	1 X 10⁻⁴			
Ave(AA)	515358	1 X 10⁻⁴	9023	2358	5.29 X 10⁻⁶
3A	415277	1 X 10⁻⁴			
3B	423654	1 X 10⁻⁴			
3C	407561	1 X 10⁻⁴			
Ave(AA)	415497	1 X 10⁻⁴	7275	1902	4.31 X 10⁻⁶

BONNER ANALYTICAL TESTING COMPANY
RT. 14, BOX 509
HATTIESBURG, MS 39402
(601) 264-2854

EPA METHOD 25

VOLATILE ORGANIC CARBON

Facility HERCULES Inc - Hattiesburg

Location 033- Polypale Water Scrubber Vent-East

Date 5/20/88 Operators JP/MSB/JS

Run # III (3)
Bag # 034
Trap # 034

Barometric Press (in Hg) 30.03

Ambient Temp. (F) 88

Wet Bulb 70
Dry Bulb 95
% Moisture <1

Sample Train Leak Rate ((1 cc/min) <1cc/min

Pretest Vacuum 30 in H_2O 0.2 in/min Leakrate ((1.6 in/min)

Post Test Vacuum 30 in H_2O 0.25 in/min Leakrate ((1.6 in/min)

DRY GAS METER

Meter # 3363323

Meter Coef: ~~tot~~ 0.991

Date Calibrated 5/19/88

	Time Clock/Sample	Mass Flow Meter Reading	Source Volumetric Flow Data: Cubic feet	Dry Gas Meter Temp(F)	Static Press (in H_2O)
I	1645	150	546.73	95	<0.1
1	1655	150	546.60	95	<0.1
2	~~to~~ 1705	150	546.60	95	<0.1
3	1715	150	546.61	95	<0.1
4	1725	150	546.61	95	<0.1
5	1735	150	546.61	95	<0.1
6	1745	150	546.61	95	<0.1
7					
8					
9					
10					
11					
12					
Total	60		0.01 CF		
Average		150 cc/min 9.000 Liters		95 (555R)	<0.1 (30.03)

BONNER ANALYTICAL TESTING COMPANY
RT. 14, BOX 509
HATTIESBURG, MS 39402
(601) 264-2854

BYRON METHOD 25 Lab Data Sheet

FACILITY Hercules Inc - H'burg

LOCATION 033 - Polypale - East RUN III (3)

Bag I.D. 034
Volume Collected 9.000 Volume Analyzed 9.000
if changed, why

Trap I.D. 034
Volume Collected 9.000 Burnout Volume 4.700

BAG ANALYSIS

Date ~~5/28/88~~ 5/30/88 Analyst MSB/JP

				Average
NMHC	13429	13951	13111	13497
CO	3332	3190	3256	3259
CO_2	59452	58322	60775	59516
CH_4	1109	1142	1105	1119

TRAP ANALYSIS

Date 5/28/88 Temperature 300°C Analyst MSB/JP

				Average
NMHC	<3	<3	<3	<3
CO	<3	<3	<3	<3
CO_2	~~1346~~ 703	~~1391~~ 726	~~1305~~ 681	~~1347~~ 704
CH_4	<3	<3	<3	<3

General Comments

VOC = volatile organic carbon - This is the sum of the VOC collected in the trap plus any VOC that passes through the trap into the bag. In the analysis the bag portion is the BAG NMHC (nonmethane hydrocarbon); the trap is burned out and all the VOC converted to carbon dioxide prior to analysis thus the trap portion is the TRAP CO_2.

$$VOC_t \text{ lb/hr} = \frac{(VOC\ BAG_{ave} + VOC\ TRAP_{ave})\ SCFH}{32 \times 10^6}$$

$$VOC_t \text{ lb/hr} = \frac{(13497 \text{ bag} + \cancel{1347}\ 704 \text{ trap})\ \cancel{0.103}\ 0.0095\ \cancel{0.0103}\ SCFH}{32 \times 10^6}$$

$$VOC_t = \frac{4.21}{\cancel{4.44} \times 10^{-6}}$$

BUNNER ANALYTICAL TESTING COMPANY
RT. 14, BOX 509
HATTIESBURG, MS 39402
(601) 264-2854

Sulfur Dioxide

NIOSH Method
P & CAM 163

Facility Hercules Inc

Location 033 Polypale WSV-East

Date 5/20/88 Run Number 3 Operator JP/JS/MSB

1. Volume of air sampled (SCM) = V_m (STD)

$$V_m(STD) = V_m\left(\frac{29.92 \times T_{obs}}{P_{bar} \times 528}\right)^{0.5} \times 10^{-3}$$

$$= 30L\left(\frac{29.92 * 555}{30.03 * 528}\right)^{0.5} * 10^{-3}$$

$$= \boxed{0.0307}$$

2. Concentration of Sulfur Dioxide (mg/scm) = C (mg/scm)

$$C(mg/scm) = \frac{(ml_t - ml_{blk})(N_{Bocl04})(MW_{SO2})}{V_m} \left(\frac{V}{V_{alic}}\right)$$

$$\frac{(10)(0.01)(64)(50)}{(0.0307)(0.1)}$$

$$= \boxed{104234}$$

3. Concentration of (SO2) in (lb/scf) = C (lb/scf)

$$C(lb/scf) = \frac{C(mg/scm)}{1.602 \times 10^{7}} = \frac{104234}{1.602 * 7} =$$

$$= \boxed{6.506 * 10^{-3}}$$

4. Mass Loading of SO2 = ml (lb/hr)

$$ml(lb/hr) = C(lb/scf) \times SCF$$

$$= 6.506 * 10^{-3} * 0.0095$$

$$= \cancel{6.70 * 10^{-3}\ lb/Hr} * 0.0095$$

$$= \cancel{6.365 * 10^{-5}\ lb/Hr}$$

$$\boxed{6.18 * 10^{-5}\ lb/Hr}$$

Loc #033-East
Run III ③

BONNER ANALYTICAL TESTING COMPANY
RT. 14, BOX 509
HATTIESBURG, MS 39401
(601) 264-2854

1. Standard Cubic Feet Per Run (Vms)

$$Vms = 17.647 \times Ym\ (Vmf - Vmi)\ \frac{(Pb + 13.6)}{Tm}$$

$$Vms = 17.647 * \overset{0.991}{\cancel{1.01}} * 0.01 \left(\frac{30.03 \frac{0.1}{136}}{555} \right)$$

$$= \cancel{0.103}\ \cancel{0.085}\ \boxed{0.0095}$$

2. Standard Cubic Feet Per Hour (SCFH)

$$SCFH = \frac{Vms}{HR} \quad \overset{0.0095}{>} \frac{\cancel{0.103}}{1} = \boxed{\cancel{0.103}}\ \boxed{\cancel{0095}}\ \boxed{0.0095}$$

3. Gas Flow Rate

$$Qs = \frac{Vms}{\theta}$$

FIELD DATA SHEET ~~VOLATILE HYDROCARBONS~~ Sulfur Dioxide

Facility: Hercules Inc

Location: 033 Polypole WSW - East

Date: 5/20/88 Operators JP/JS/MSB

Analyte: Sulfur Dioxide

	Run 1	Run 2	Run 3
Sample Temp (F	97	100	95
Barometric press (in Hg)	30.03	30.03	30.03
Ambient Temperature (F)	86	86	88
Sample flow rate L/min	0.600	1.00	0.500
~~Bag ID~~ SAmpleID	033E1/1-3	033E2/1-3	033E3/1-3
Start Time	1400	1520	1645
End Time	1500	1620	1745

FIELD DATA SHEET VOLATILE HYDROCARBONS

Facility: Hercules Inc

Location: 033 Polypole WSV - East

Date: 05/20/88 Operators JS/JP/MSB

Analyte: Toluene

	Run 1	Run 2	Run 3
Sample Temp (F	97	100	95
Barometric press (in Hg)	30.03	30.03	30.03
Ambient Temperature (F)	86	86	88
Sample flow rate L/mm	0.100 ~~0.600~~	0.100 ~~1.00~~	0.100 ~~0.500~~
Bag ID	033E/1	033E/2	033E/3
Start Time	1400	1520	1645
End Time	1500	1620	1745

Facility: Hercules Method 18

Location: 033 Polypale EAST

Analyte: Toluene

1. Nanograms of standard injected @ STP (NGSTD)

$$NG(STD) = NGobs \times \frac{(29.92 \times Tobs)^{0.5}}{Pbar \times 528}$$

STD1 = 250 x 1.002 = 251

STD2 = 500 x 1.002 = 501

STD3 = 1000 x 1.002 = 1002

2. Concentration of Analyte mg/m³ @ STP CSTD

$$CSTD = \frac{AA \times 1 \times 10^{-3}}{RfSTD \times Vi \times \frac{(29.92 \times Tobs)^{0.5}}{Pbar \times 528}}$$

Run 1 = $\frac{151246 \times 1 \times 10^{-3}}{570 \times 1*10^{4} \times 1.002}$ = 2648

Run 2 = $\frac{515358 \times 1 \times 10^{-3}}{570 \times 1*10^{-4} \times 1.002}$ = 9023

Run 3 = $\frac{415497 \times 1 \times 10^{-3}}{570 \times 1*10^{-4} \times 1.002}$ = 7275

3. Parts per million of Analyte @ STP (PPM)

$$PPM = CSTD \times \frac{24.05}{MW}$$

Run 1 2648 x $\frac{24.05}{92}$ = 692

Run 2 9023 x $\frac{24.05}{92}$ = 2358

Run 3 7275 x $\frac{24.05}{92}$ = 1902

4. Mass Loading of Analyte (STP) lb/hr (MSTD)

$$MSTD = \frac{CSTD \times SCFH}{1.6019 \times 10^{7}}$$

Run 1 = $\frac{2648 \times 4.14}{1.6019 \times 10^{7}}$ = ~~1.789*10⁻⁴~~ $6.847*10^{-4}$

Run 2 = $\frac{9023 \times 0.0094}{1.6019 \times 10^{7}}$ = $5.29*10^{-6}$

Run 3 = $\frac{7275 \times 0.0095}{1.6019 \times 10^{7}}$ = $4.31*10^{-6}$

Facility: Hercules Inc Method 1B-GC/MS

Location: 033 Polypole East Sample Type Bag

Date: 5/20/88

Analyte: Toluene Operator: DM/MSB

Calibration Data: GC - GC/MS

	STANDARD	Amt (ng) STD	AREA			Ave Area	Ave Area/ng
1.	250	251	115090	135986	141250	130795	523
2.	500	501	291973	288456	297126	292518	585
3.	1000 / 1250	1002	585763 / 746001	566451	571224	574479	574 / 597

Rf (STD) = 570

Sample	Area	Samp Vol. (L)	mg/m³ (STD)	PPM (STD)	lb/hr (STD)
Run 1A	154538	$1*10^{-4}$			
1B	149422				
1C	149777				
Ave (AA)	151246		2648	692	$6.84*10^{-4}$
2A	522444				
2B	509873				
2C	513756				
Ave (AA)	515358		9023	2358	$5.29*10^{-6}$
3A	415277				
3B	423654				
3C	407561				
Ave (AA)	415497	$1*10^{-4}$	7275	1902	$4.31*10^{-6}$

AERC243

BONNER ANALYTICAL TESTING COMPANY
RT. 14, BOX 509
HATTIESBURG, MS 39402
(601) 264-2854

OK
Calc
Tol OK

EPA METHOD 25

VOLATILE ORGANIC CARBON

Facility Hercules Inc - Hattiesburg

Location 033 - Polypole H2O Scrubber Vent East

Date 05/20/88 Operator MSB/JP/JS

Run # 1
Bag # 024
Trap # 024

Barometric Press (in Hg) 30.03

Ambient Temp. (F) 86

Wet Bulb 71
Dry Bulb 92
% Moisture <1

Sample Train Leak Rate (<1 cc/min) < 1.0 cc/min ok

Pretest Vacuum 30 in H2O 0.45 IN/min Leakrate (<1.6 in/min)

Post Test Vacuum 30 in H2O 0.45 IN/min. Leakrate (<1.6 in/min)

DRY GAS METER

Meter # ~~411415~~ 3363323

Meter Coef: ~~1.013~~ 0.991

Date Calibrated 5/19/88

	Time Clock/Sample	Mass Flow Meter Reading	Source Volumetric Flow Data: Cubic feet	Dry Gas Meter Temp(F)	Static Press (in H2O)
I	1400	150 cc/min	542.39	92	<0.1
1	1410	150	543.50	94	<0.1
2	1420	150	544.78	100	<0.1
3	1430	150	545.78	100	<0.1
4	1440	150	546.75	100	<0.1
5	1450	150	546.78	98	<0.1
6	1500	150	546.78	98	<0.1
7					
8					
9					
10					
11					
12					
Total	60		4.39 CF	682	
Average		150 cc/min		~~594~~ 97 (ECHR)	<0.1 (30.03)

0.0001

BONNER ANALYTICAL TESTING COMPANY
RT. 14, BOX 509
HATTIESBURG, MS 39402
(601) 264-2854

BYRON METHOD 25 Lab Data Sheet

FACILITY Hercules Inc - H'burg

LOCATION 033-Polypole-East RUN 1

Bag I.D. 024
Volume Collected 9.000 Volume Analyzed 9.000
if changed, why

Trap I.D. 024
Volume Collected 9.000 Burnout Volume 5.000

BAG ANALYSIS

Date 5/30/88 Analyst MSB/JP

				Average
NMHC	4810	4957	4830	4866
CO	2905	2978	3006	2963
CO_2	56611	~~1055~~ 55508	56600	56240
CH_4	995	1055	1000	1017

TRAP ANALYSIS

Date 5/30/88 Temperature 300 Analyst JP/MSB

				Average
NMHC	<3	<3	<3	<3
CO	<3		<3	<3
CO_2	146	143	142	144
CH_4	<3	<3	<3	<3

General Comments

VOC = volatile organic carbon - This is the sum of the VOC collected in the trap plus any VOC that passes through the trap into the bag. In the analysis the bag portion is the BAG NMHC (nonmethane hydrocarbon); the trap is burned out and all the VOC converted to carbon dioxide prior to analysis thus the trap portion is the TRAP CO_2.

VOC_t lb/hr = (VOC BAG_{ave} + VOC $TRAP_{ave}$) SCFH $\frac{32 \times 10^6}{}$

VOC_t lb/hr = (~~56240~~ 4866 bag + 144 trap) 4.14 ~~4.02~~ SCFH

VOC_t = ~~4.083~~ OK: ~~7.206 x 10^{-3}~~ $\frac{32 \times 10^6}{(1.109 \times 10^{-4}}$

RT. 14, BOX 509
HATTIESBURG, MS 39402
(601) 264-2854

Sulfur Dioxide

NIOSH Method
P & CAM 163

Facility Hercules Inc H'burg

Location 033 Polypale WSV-East

Date 5/20/88 Run Number 1 Operator MSB/SP/DS

1. Volume of air sampled (SCM) = V_m (STD)

$$V_{m(STD)} = V_m \left(\frac{29.92 \times T_{obs}}{P_{bar} \times 528}\right)^{0.5} \times 10^{-3}$$

$$= 36 * \left(\frac{29.92 * 557}{30.03 * 528}\right)^{0.5} * 10^{-3}$$

$$= \cancel{0.0375\ M^3}\ \ 0.0369\ M^3$$

2. Concentration of Sulfur Dioxide (mg/scm) = C (mg/scm)

$$C(mg/scm) = \frac{(ml_t - ml_{blk})(N_{Eocl4})(MW_{SO2})}{V_m} \left(\frac{V}{V_{aliq}}\right)$$

$$= \frac{10.6 * 0.01 * 64 * 50}{0.0375 * 0.10} \quad 0.0369$$

$$= \cancel{9045\ mg/scm}\ \ 91924\ mg/SCM$$

3. Concentration of (SO2) in (lb/scf) = C (lb/scf)

$$C(lb/scf) = \frac{C(mg/scm)}{1.602 \times 10^7} \quad \frac{\cancel{9045}}{\cancel{1.602*10^7}} \quad \frac{91924}{1.602*10^7}$$

$$= \frac{\cancel{5.646 * 10^{-3}}}{5.738 * 10^{-3}}\ lb/SCF$$

4. Mass Loading of SO2 = ml (lb/hr)

$$ml\ (lb/hr) = C\ (lb/scf) \times \frac{SCF}{HR}$$

$$= \cancel{5.738*10^{-3}}\ \cancel{5.646*10^{-3}} * \cancel{4.02} = 5.738 * 10^{-3} * 4.14$$

$$= \cancel{2.309 * 10^{-2}\ lb/HR} = 2.38 * 10^{-2}\ lb/Hr$$

BONNER ANALYTICAL TESTING COMPANY
RT. 14, BOX 509
HATTIESBURG, MS 39401
(601) 264-2854

Facility Hercules. Inc

Location 033 Polypale - East

Run 1

1. Standard Cubic Feet Per Run (Vms)

$$Vms = 17.647 \times Ym\ (Vmf - Vmi)\ \frac{(Pb + \frac{DPm}{13.6})}{Tm}$$

$$Vms = 17.647 * 0.991 * 4.39 * \frac{30.03}{574\ 557}$$

$$= 4.09\ \ 4.02$$

$$= 4.139$$

2. Standard Cubic Feet Per Hour (SCFH)

$$SCFH = \frac{Vms}{HR}\ \ \frac{4.09}{1} = 4.09\ \ 4.02\ \ 4.14$$

3. Gas Flow Rate

$$Qs = \frac{Vms}{J}$$

BONNER ANALYTICAL TESTING COMPANY
RT. 14, BOX 509
HATTIESBURG, MS 39402
(601) 264-2854

EPA METHOD 25

VOLATILE ORGANIC CARBON

Facility HERCules Inc - H burg

Location 033 Polypale H_2O ~~Scrub~~ Scrubber - EAST

Date 05/20/88 Operators JP/MSB/JS

Run # 2
Bag # 030
Trap # 030

Barometric Press (in Hg) 30.03

Ambient Temp. (F) 86

Wet Bulb 77
Dry Bulb 100
% Moisture <1

Sample Train Leak Rate (<1 cc/min) <1 cc/min ok

Pretest Vacuum 30 in H_2O 0.25 in/min Leakrate (<1.6 in/min)

Post Test Vacuum 30 in H_2O 0.25 in/min Leakrate (<1.6 in/min)

SO_2 / Toluene

DRY GAS METER

Meter # 3363323

Meter Coef: ~~1.01~~ 0.991

Date Calibrated 5/19/88

	Time Clock/Sample	Mass Flow Meter Reading	Source Volumetric Flow Data: Cubic feet	Dry Gas Meter Temp (F)	Static Press (in H_2O)
I	1520	100 cc/min	546.78	100°F	<0.1
1	1530	100	546.78	100	<0.1
2	1540	100	~~546.78~~ 546.79	100	<0.1
3	1550	100	546.79	100	<0.1
4	1600	100	546.79	100	<0.1
5	~~1605~~ 1610	100	546.79 ~~546.79~~	100	<0.1
6	1620	100	546.73 ~~546.73~~	100	<0.1
7					
8					
9					
10					
11					
12					

Total 60 0.01 CF

Average 100 cc/min 6.000 L 100°F (560R) <0.1 (30.03)

BONNER ANALYTICAL TESTING COMPANY
RT. 14, BOX 509
HATTIESBURG, MS 39402
(601) 264-2854

BYRON METHOD 25 Lab Data Sheet

FACILITY Hercules Bruce

LOCATION 033 Polypale East RUN 2

Bag I.D. ~~Lo~~ 030
Volume Collected 6.000 Volume Analyzed 6.000
if changed, why

Trap I.D. 030
Volume Collected 6.000 Burnout Volume 6.250

BAG ANALYSIS

Date 5/30/88 Analyst JP/MSB

				Average
NMHC	36842	36179	36154	36392
CO	1800	1767	1840	1803
CO_2	31174	30797	31004	30992
CH_4	480	481	477	479

TRAP ANALYSIS

Date 5/30/88 Temperature 300 Analyst JP/MSB

				Average
NMHC	<3	<3	<3	<3
CO	<3	<3	<3	<3
CO_2	1643	~~1643~~ 1590	1691	1641
CH_4	<3	<3	<3	<3

General Comments

VOC = volatile organic carbon - This is the sum of the VOC collected in the trap plus any VOC that passes through the trap into the bag. In the analysis the bag portion is the BAG NMHC (nonmethane hydrocarbon); the trap is burned out and all the VOC converted to carbon dioxide prior to analysis thus the trap portion is the TRAP CO_2.

$$VOC_t \text{ lb/hr} = \frac{(VOC\ BAG_{ave} + VOC\ TRAP_{ave})\ SCFH}{32 \times 10^6}$$

$$VOC_t \text{ lb/hr} = \frac{(36392 \text{ bag} + 1641 \text{ trap})\ 0.0094 \text{ SCFH}}{32 \times 10^6}$$

$$VOC_t = 1.117 \times 10^{-5}$$

[illegible] ANALYTICAL TESTING COMPANY
RT. 14, BOX 509
HATTIESBURG, MS 39402
(601) 264-2854

Sulfur Dioxide

NIOSH Method
P & CAM 163

Facility Hercules Inc

Location 033 Polypropylene WS V-E

Date 5/24/88 Run Number 2 Operator JS/JP/MSB

1. Volume of air sampled (SCM) = V_m (STD)

$$V_m(STD) = V_m\left(\frac{29.92 \times T_{obs}}{P_{bar} \times 528}\right)^{0.5} \times 10^{-3}$$

$$= 60\left(\frac{29.92 * 560}{528 * 30.03}\right)^{0.5} * 10^{-3}$$

$$= \boxed{0.0616}$$

2. Concentration of Sulfur Dioxide (mg/scm) = C (mg/scm)

$$C(mg/scm) = \frac{(ml_t - ml_{blk})(N_{Bacl_4})(MW_{SO2})}{V_m} \left(\frac{V}{Value}\right)$$

$$= \frac{51.3 * 0.01 * 64 * 50}{0.0616 * 1}$$

$$= \boxed{26649}$$

3. Concentration of (SO2) in (lb/scf) = C (lb/scf)

$$C(lb/scf) = \frac{C(mg/scm)}{1.602 \times 10^{7}} = \frac{26649}{1.602 * 10^{7}}$$

$$= \boxed{1.66 * 10^{-3}\ lb/SCF}$$

4. Mass Loading of SO2 = ml (lb/hr)

$$ml(lb/hr) = C(lb/scf) \times \frac{SCF}{HR}$$

$$= 1.66 * 10^{-3} * 0.0094$$

$$= \boxed{1.56 * 10^{-5}\ lb/Hr}$$

BONNER ANALYTICAL TESTING COMPANY
RT. 14, BOX 509
HATTIESBURG, MS 39401
(601) 264-2854

Loc: 038-EAST
Run 2

1. Standard Cubic Feet Per Run (Vms)

$$Vms = 17.647 \times Ym \ (Vmf - Vmi) \ \frac{(Pb + \frac{\Delta Pm}{13.6})}{Tm}$$

$$Vms = 17.647 \times \cancel{0.01}\ 1.01 \times 0.01 \ \frac{30.03}{560}$$

$$= \cancel{0.01}\ 0.0094$$

2. Standard Cubic Feet Per Hour (SCFH)

$$SCFH = \frac{Vms}{HR}$$

$\cancel{0.01}$ 0.0094

3. Gas Flow Rate

$$Qs = \frac{Vms}{\theta}$$

BONNER ANALYTICAL TESTING COMPANY
RT. 14, BOX 609
HATTIESBURG, MS 39402
(601) 264-2854

EPA METHOD 25

VOLATILE ORGANIC CARBON

Facility Hercules, Inc. - Hattiesburg, Ms

Location 033 Polypale Water Scrubber Vent - West

Date 5/20/88 Operators [illegible]

Run # 1
Bag # 031
Trap # 031

Barometric Press (in Hg) 30.07

Ambient Temp. (F) 86

Wet Bulb 84
Dry Bulb 92
% Moisture <1

Sample Train Leak Rate (<1 cc/min) <1

Pretest Vacuum 30 in H_2O 0.30 in/min Leakrate (<1.6 in/min)

Post Test Vacuum 30 in H_2O 0.30 in/min Leakrate (<1.6 in/min)

DRY GAS METER

Meter # 75021

Meter Coef: 0.995

Date Calibrated

	Time Clock/Sample	Mass Flow Meter Reading	Source Volumetric Flow Data: Cubic feet	Dry Gas Meter Temp (F)	Static Press (in H_2O)
I	1445	100 cc/min	100	92	0.3
1	1455	105 cc/min	176	92	0.3
2	1505	105 cc/min	251	92	0.3
3	1515	110 cc/min	331	92	0.3
4	1525	105 cc/min	521	92	0.3
5	1535	100 cc/min	579	92	0.3
6	1545	100 cc/min	680	92	0.3
7					
8					
9					
10					
11					
12					
Total	60	725	580 CF		2.1
Average		104 cc/min		92 (5528)	[illegible]

BONNER ANALYTICAL TESTING COMPANY
RT. 14, BOX 509
HATTIESBURG, MS 39402
(601) 264-2854

BYRON METHOD 25 Lab Data Sheet

FACILITY Hercules, Inc.

LOCATION 003 Polypale - West Run # 1

Bag I.D. 031
Volume Collected 6.240 Volume Analyzed 6.240
if changed, why

Trap I.D. 031
Volume Collected 6.240 Burnout Volume 7.500

BAG ANALYSIS

Date 5/30/88 Analyst MSB/JP

				Average
NMHC	42050	41030	38990	41023
CO	27500	27840	28800	28050
CO_2	280790	269750	288500	279680
CH_4	21960	21840	21770	21860

TRAP ANALYSIS

Date 5/30/88 Temperature 300 C Analyst MSB/JP

				Average
NMHC	<3	<3	<3	<3
CO	<3	<3	<3	<3
CO_2	7085	7263	7420	7256
CH_4	<3	<3	<3	<3

General Comments

VOC = volatile [illegible]
collected in the [illegible]
trap into the [illegible]
BAG NMHC (nonmethane [illegible]
and all the VOC converted [illegible]
sis thus the trap portion [illegible]

$$VOC_4 \text{ lb/hr} = \frac{(VOC\ BAG_{avg} + VOC\ TRAP_{avg})\ [illegible]}{32 \times [illegible]}$$

$$VOC_4 \text{ lb/hr} = \frac{(41023\ \text{bag} + [illegible]\ \text{trap}\ [illegible])}{[illegible]}$$

$$VOC_4 = \frac{[illegible]}{0.836\ [illegible]}$$

BONNER ANALYTICAL TESTING COMPANY
RT. 14, BOX 509
HATTIESBURG, MS 39402
(601) 264-7854

Sulfur Dioxide

NIOSH Method
P & CAM 163

Facility Hercules, Inc.

Location 033 Polypale WSV - West

Date 5/20/88 Run Number 1 Operator [illegible]

1. Volume of air sampled (SCM) = Vm^3 (STD)

$$V_m^3 (STD) = Vm \left(\frac{29.92 \times Tobs}{Pbar \times 528}\right)^{0.5} \times 10^{-3}$$

$$= (36) \left(\frac{29.92 \times 552}{30.03 \times 528}\right)^{0.5} \times 10^{-3}$$

$$= \boxed{0.0367 M^3}$$

2. Concentration of Sulfur Dioxide (mg/scm) = C (mg/scm)

$$C(mg/scm) = \frac{(ml_t - ml_{blk})(N_{BaClO4})(MW_{SO2})}{V_m^3} \left(\frac{V}{Valib}\right)$$

$$= \frac{(36)(0.01)(64)(50)}{(0.0367)(1.0)} = \boxed{31615 \text{ mg/scm}}$$

3. Concentration of (SO2) in (lb/scf) = C (lb/scf)

$$C(lb/scf) = \frac{C(mg/scm)}{1.602 \times 10^7}$$

$$= \frac{31615}{1.602 \times 10^7} = \boxed{1.973 \times 10^{-3} \text{ lb/scf}}$$

4. Mass Loading of SO2 = ml (lb/hr)

$$ml (lb/hr) = C (lb/scf) \times \frac{SCF}{HR}$$

$$= 1.973 \times 10^{-3} \times 554.4 = \boxed{1.093 \text{ lb/hr}}$$

BONNER ANALYTICAL TESTING COMPANY
RT. 14, BOX 359
HATTIESBURG, MS 39401
(601) 264-7954

Facility Hercules, Inc.

Location 033 Polypale WSV - West

Run #1

1. Standard Cubic Feet Per Run (Vms)

$$Vms = 17.647 \times Ym\ (Vmf - Vmi)\ \frac{(Po + \frac{\Delta H}{13.6})}{Tm}$$

$$Vms = (17.647)\ (0.005)\ (580)\ \left(\frac{30.05}{552}\right)$$

$$= \boxed{554.4}$$

2. Standard Cubic Feet Per Hour (SCFH)

$$SCFH = \frac{Vms}{HR} = \boxed{554.4}$$

3. Gas Flow Rate

$$Qs = \frac{Vms}{\theta}$$

BONNER ANALYTICAL TESTING COMPANY
RT. 14, BOX 509
HATTIESBURG, MS 39402
(601) 264-2854

EPA METHOD 25

VOLATILE ORGANIC CARBON

Facility Hercules, Inc. - Hattiesburg, MS

Location 033 Polypale Water Scrubber Vent - West

Date 5/20/98 Operators J.S/J.T/MSR

Run # 2
Bag # 032
Trap # 032

Barometric Press (in Hg) 30.03

Ambient Temp. (F) 86

Wet Bulb 82
Dry Bulb 92
% Moisture <1

Sample Train Leak Rate (<1 cc/min) <1

Pretest Vacuum 30 in H_2O 0.30 in/min Leakrate (<1.6 in/min)

Post Test Vacuum 30 in H_2O 0.30 in/min Leakrate (<1.6 in/min)

DRY GAS METER

Meter # 7502

Meter Coef: 0.995

Date Calibrated 5/19/98

	Time	Mass Flow	Source Volumetric Flow Data		
	Clock/Sample	Meter Reading	Cubic Feet	Dry Gas Meter Temp(F)	Static Press (in H_2O)
I	1555	100 cc/min	713	92	0.3
1	1605	100 cc/min	786	92	0.3
2	1615	100 cc/min	819	92	0.3
3	1625	100 cc/min	860	92	0.3
4	1635	100 cc/min	914	92	0.3
5	1645	100 cc/min	960	92	0.3
6	1655	100 cc/min	1014	92	0.3
7					
8					
9					
10					
11					
12					
Total	60		301 Ft³		
Average		100 cc/min		92 (552R)	0.3 (<0.05)

BONNER ANALYTICAL TESTING COMPANY
RT. 14, BOX 509
HATTIESBURG, MS 39402
(601) 264-2854

BYRON METHOD 25 Lab Data Sheet

FACILITY Hercules, Inc.

LOCATION 003 Polypale - West RUN # 2

Bag I.D. 032
Volume Collected 6.000 Volume Analyzed 6.000
if changed, why

Trap I.D. 032
Volume Collected 6.000 Burnout Volume 5.000

BAG ANALYSIS

Date 5/30/88 Analyst MSB/JP

				Average
NMHC	131956	128845	137015	132605
CO	26873	25966	26142	26327
CO_2	282926	280926	285449	283100
CH_4	16564	16931	16844	16780

TRAP ANALYSIS

Date 5/30/88 Temperature 300 C Analyst MSB/JP

				Average
NMHC	<3	<3	<3	<3
CO	<3	<3	<3	<3
CO_2	6952	6875	7005	6944
CH_4	<3	<3	<3	<3

General Comments

VOC = volatile organic carbon - This is the sum of the VOC collected in the trap plus any VOC that passes through the trap into the bag. In the analysis the bag portion is the BAG NMHC (nonmethane hydrocarbon); the trap is burned out and all the VOC converted to carbon dioxide prior to analysis thus the trap portion is the TRAP CO_2.

$$VOC_+ \text{ lb/hr} = \frac{(VOC\ BAG_{ave} + VOC\ TRAP_{ave})\ SCFM}{32 \times 10^6}$$

$$VOC_+ \text{ lb/hr} = \frac{(132605 \text{ bag} + 6944 \text{ trap})\ 287.7\ SCFM}{32 \times 10^6}$$

VOC_+ = 1.254 lb/hr.

BONNER ANALYTICAL TESTING COMPANY
RT. 14, BOX 509
HATTIESBURG, MS 39402
(601) 264-2854

Sulfur Dioxide

NIOSH Method
P & CAM 163

Facility Hercules, Inc.

Location 033 Polypale WSV - West

Date 5/20/88 Run Number 2 Operator JS/MSB/JF

1. Volume of air sampled (SCM) = Vm^3 (STD)

$$V_m^3 \text{ (STD)} = Vm \left(\frac{29.92 \times Tobs}{Pbar \times 528}\right)^{0.5} \times 10^{-3}$$

$$= (36) \left(\frac{29.92 \times 552}{30.03 \times 528}\right)^{0.5} \times 10^{-3}$$

$$= \boxed{0.0367 \text{ M}}$$

2. Concentration of Sulfur Dioxide (mg/scm) = C (mg/scm)

$$C(mg/scm) = \frac{(ml_+ - ml_{blk})(N_{base})(MW_{SO2})}{V_m^3} \Big/ \left(\frac{V}{Valiq}\right)$$

$$= \frac{(44.1)(0.01)(64)(50)}{(0.0367)(1.0)} = \boxed{38452 \text{ mg/scm}}$$

3. Concentration of (SO2) in (lb/scf) = C (lb/scf)

$$C(lb/scf) = \frac{C(mg/scm)}{1.602 \times 10^7}$$

$$= \frac{38452}{1.602 \times 10^7} = \boxed{2.400 \times 10^{-3}}$$

4. Mass Loading of SO2 = ml (lb/hr)

$$ml \text{ (lb/hr)} = C \text{ (lb/scf)} \times \frac{SCF}{HR}$$

$$= 2.400 \times 10^{-3} \times 287.7 = \boxed{0.691 \text{ lb/hr}}$$

BONNER ANALYTICAL TESTING COMPANY
RT. 14, BOX 509
HATTIESBURG, MS 39401
(601) 264-2854

Facility Hercules, Inc.

Location 033 Polypale WSV - West

Run # 2

1. Standard Cubic Feet Per Run (Vms)

$$Vms = 17.647 \times Ym \ (Vmf - Vmi) \ \frac{(Po + 13.6)}{Tm} \ \frac{\Delta Pm}{}$$

$$Vms = (17.647)(0.995)(301)\left(\frac{30.05}{552}\right)$$

$$= \boxed{287.7}$$

2. Standard Cubic Feet Per Hour (SCFH)

$$SCFH = \frac{Vms}{HR} = \boxed{287.7}$$

3. Gas Flow Rate

$$Qs = \frac{Vms}{\theta}$$

BONNER ANALYTICAL TESTING COMPANY
RT. 14, BOX 509
HATTIESBURG, MS 39402
(601) 264-2854

EPA METHOD 25

VOLATILE ORGANIC CARBON

Facility Hercules, Inc. - Hattiesburg, MS

Location 033 Polysale Water Scrubber Vent - West

Date 5/20/88 Operators JLS/JF/MSB

Run # 3
Bag # 033
Trap # 033

Barometric Press (in Hg) 30.03

Ambient Temp. (F) 88

Wet Bulb 87
Dry Bulb 105
% Moisture <1

Sample Train Leak Rate (<1 cc/min) <1

Pretest Vacuum 30 in H_2O 0.30 in/min Leakrate (<1.6 in/min)

Post Test Vacuum 30 in H_2O 0.30 in/min Leakrate (<1.6 in/min)

DRY GAS METER

Meter # 75021

Meter Coef: 0.995

Date Calibrated 5/19/88

	Time	Mass Flow	Source Volumetric Flow Data		
	Clock/Sample	Meter Reading	Cubic feet	Dry Gas Meter Temp(F)	Static Press (in H_2O)
I	1700	100 cc/min	1021	92	0.3
1	1710	100 cc/min	1040	92	0.3
2	1720	105 cc/min	1076	92	0.3
3	1730	105 cc/min	1251	92	0.3
4	1740	105 cc/min	1306	92	0.3
5	1750	105 cc/min	1364	92	0.3
6	1800	100 cc/min	1408	92	0.3
7					
8					
9					
10					
11					
12					
Total	60	720 cc/min	387 CF		
Average		103 cc/min		92 (552R)	0.3 (30.05)

BONNER ANALYTICAL TESTING COMPANY
RT. 14, BOX 509
HATTIESBURG, MS 39402
(601) 264-2854

BYRON METHOD 25 Lab Data Sheet

FACILITY Hercules, Inc.

LOCATION 003 Polypale - West RUN # 3

Bag I.D. 033
Volume Collected 6.180 Volume Analyzed 6.180
if changed, why

Trap I.D. 033
Volume Collected 6.180 Burnout Volume

BAG ANALYSIS

Date 5/30/88 Analyst MSB/JP

				Average
NMHC	161225	167242	164776	164415
CO	31151	31925	30749	31275
CO_2	308080	300451	304044	304192
CH_4	18479	18113	17969	18187

TRAP ANALYSIS

Date 5/30/88 Temperature 300 C Analyst MSB/JP

				Average
NMHC	<3	<3	<3	<3
CO	21.9	21.1	21.1	21
CO_2	14790	14715	15123	14876
CH_4	<3	<3	<3	<3

General Comments

VOC = volatile organic carbon - this is the sum of the VOC collected in the trap plus any VOC that passes through the trap into the bag. In the analysis the bag portion is the BAG NMHC (nonmethane hydrocarbon); the trap is burned out and all the VOC converted to carbon dioxide prior to analysis thus the trap portion is the TRAP CO_2.

$$VOC_+ \text{ lb/hr} = \frac{(VOC\ BAG_{ave} + VOC\ TRAP_{ave})\ SCFH}{32 \times 10^6}$$

$$VOC_+ \text{ lb/hr} = \frac{(164415 \text{ bag} + 14876 \text{ trap})\ 369.9\ SCFH}{32 \times 10^6}$$

VOC_+ = 2.07 lb/hr.

BONNER ANALYTICAL TESTING COMPANY
RT. 14, BOX 509
HATTIESBURG, MS 39402
(601) 264-2854

Sulfur Dioxide

NIOSH Method
P & CAM 163

Facility Hercules, Inc.

Location 033 Polypale WSV - West

Date 5/20/88 Run Number 3 Operator JS/MSB/JP

1. Volume of air sampled (SCM) = V_{m^3} (STD)

$$V_{m\ 3\ (STD)} = Vm \left(\frac{29.92 \times Tobs}{Pbar \times 528}\right)^{0.5} \times 10^{-3}$$

$$= (36) \left(\frac{29.92 \times 552}{30.03 \times 528}\right)^{0.5} \times 10^{-3}$$

$$= \boxed{0.0367}$$

2. Concentration of Sulfur Dioxide (mg/scm) = C (mg/scm)

$$C(mg/scm) = \frac{(ml_+ - ml_{blk})(N_{base})(MW_{SO2})}{V_m 3} \left(\frac{V}{Valiq}\right)$$

$$= \frac{(45.9)(0.01)(64)(50)}{(0.0367)(1.0)} = \boxed{40022}$$

3. Concentration of (SO2) in (lb/scf) = C (lb/scf)

$$C(lb/scf) = \frac{C(mg/scm)}{1.602 \times 10^7}$$

$$= \frac{40022}{1.602 \times 10^7} = \boxed{2.498 \times 10^{-3}\ lb/scf}$$

4. Mass Loading of SO2 = ml (lb/hr)

$$ml\ (lb/hr) = C\ (lb/scf) \times \frac{SCF}{HR}$$

$$= 2.498 \times 10^{-3} \times 369.9 = \boxed{0.924\ lb/hr}$$

BONNER ANALYTICAL TESTING COMPANY
RT. 14, BOX 509
HATTIESBURG, MS 39401
(601) 264-2054

Facility Hercules, Inc.

Location 033 Polypale WSV - West

Run 5/20/88 #3

1. Standard Cubic Feet Per Run (Vms)

$$Vms = 17.647 \times Ym\ (Vmf - Vmi)\ \frac{(Po + \frac{\Delta Pm}{13.6})}{Tm}$$

$$Vms = (17.647)(0.995)(387)\left(\frac{30.05}{552}\right)$$

$$= \boxed{369.9}$$

2. Standard Cubic Feet Per Hour (SCFH)

$$SCFH = \frac{Vms}{HR} = \boxed{369.9}$$

3. Gas Flow Rate

$$Qs = \frac{Vms}{\theta}$$

Method 18

Facility: Hercules, Inc

Location: 033 Polypale West

Analyte: Toluene

1. Nanograms of standard injected @ STP (NG_{STD})

$$NG(STD) = NGobs \times \frac{(29.92 \times Tobs)^{0.5}}{Pbar \times 528}$$

STD1 = 250 X $\frac{29.92 \times 532}{30.01 \times 528}$ = 251

STD2 = 500 X 1.002 = 501

STD3 = 1000 X 1.002 = 1002

2. Concentration of Analyte mg/m³ @ STP C_{STD}

$$C_{STD} = \frac{AA \times 1 \times 10^{-3}}{RfSTD \times Vi \times \frac{(29.92 \times Tobs)^{0.5}}{Pbar \times 528}}$$

Run 1 = $\frac{1375799 \times 1 \times 10^{-3}}{570 \times 1 \times 10^{-4} \times 1.002}$ = 24088

Run 2 = $\frac{2434655 \times 1 \times 10^{-3}}{570 \times 10^{-4} \times 1.002}$ = 42628

Run 3 = $\frac{3019352 \times 1 \times 10^{-3}}{570 \times 10^{-4} \times 1.002}$ = 52865

3. Parts per million of Analyte @ STP (PPM)

$$PPM = C_{STD} \times \frac{24.05}{MW}$$

Run 1 24088 X $\frac{24.05}{92}$ = 6297

Run 2 42628 X $\frac{24.05}{92}$ = 11144

Run 3 52865 X $\frac{24.05}{92}$ = 13820

4. Mass Loading of Analyte (STP) lb/hr (M_{STD})

$$M_{STD} = \frac{C_{STD} \times SCFH}{1.6019 \times 10^{7}}$$

Run 1 = $\frac{24088 \times 554.4}{1.6019 \times 10^{7}}$ = 0.834

Run 2 = $\frac{42628 \times 287.7}{1.6019 \times 10^{7}}$ = 0.766

Run 3 = $\frac{52865 \times 369.9}{1.6019 \times 10^{7}}$ = 1.220

FIELD DATA SHEET VOLATILE HYDROCARBONS

Facility: Hercules, Inc.

Location: 033 Polypale West

Date: 5/20/88 Operators JP/MSB/JS

Analyte: Toluene

	Run 1	Run 2	Run 3
Sample Temp (F	92	92	88
Barometric press (in Hg)	30.03	30.03	30.03
Ambient Temperature (F)	86	86	90
Sample flow rate	0.100	0.100	0.100
Bag ID	033 w/1	033 w/2	033 w/3
Start Time	1445	1555	1700
End Time	1545	1655	1800

FIELD DATA SHEET SULFUR DIOXIDE

Facility: Hercules, Inc.

Location: 033 Polypale West

Date: 5/20/88 Operators JP/MSB/JS

Analyte: Sulfur Dioxide

	Run 1	Run 2	Run 3
Sample Temp (F	92	92	88
Barometric press (in Hg)	30.03	30.03	30.03
Ambient Temperature (F)	86	86	88
Sample flow rate l/min	0.6	0.6	0.6
Bag ID	033 w1/1-3	033 w2/1-3	033 w3/1-3
Start Time	1445	1555	1700
End Time	1545	1655	1800
Pretest Leak Check (<1 cc/min)	< 1	< 1	< 1
Post Leak Check (<1 cc/min)	< 1	< 1	< 1

Facility: Hercules, Inc. Method 18-GC/MS

Location: 033 Polypale West Sample Type Bag

Date: 5/20/88

Analyte: Toluene Operator: MSB/DM

Calibration Data: GC - GC/MS

	STANDARD	Amt (ng) STD	AREA			Ave Area	Ave Area/ng
1.	250	251	115090	135986	141250	130775	523
2.	500	501	291973	288456	297126	292518	585
3.	1000 1250	1002	585763 746001	566451	571224	574479	574 597

Rf (STD) = 570

Sample	Area	Samp Vol. (L)	mg/m³ (STD)	PPM (STD)	lb/hr (STD)
Run 1A	1399329	1 X 10⁻⁴			
1B	1307676	1 X 10⁻⁴			
1C	1420392	1 X 10⁻⁴			
Ave(AA)	1375799	1 X 10⁻⁴	24080	6297	0.834
2A	2400661	1 X 10⁻⁴			
2B	2439927	1 X 10⁻⁴			
2C	2463378	1 X 10⁻⁴			
Ave(AA)	2434655	1 X 10⁻⁴	42628	11144	0.766
3A	2917255	1 X 10⁻⁴			
3B	3091137	1 X 10⁻⁴			
3C	3049664	1 X 10⁻⁴			
Ave(AA)	3019352	1 X 10⁻⁴	52865	13820	1.220

BONNER ANA[illegible]CAL TESTING COMPANY
RT. [illegible], BOX 509
HATTIESBURG, MS 39402 ✓
(601) 264-2854

EPA METHOD 25

VOLATILE ORGANIC CARBON

Facility Hercules - H'burg

Location 033 Polypole Water Scrubber Vent - West

Date 5/20/88 Operators JLB/JP/MSB

Run # 1
Bag # 031
Trap # 031

Barometric Press (in Hg) 30.03

Ambient Temp. (F) 86

Wet Bulb 84
Dry Bulb 92
% Moisture <1

Sample Train Leak Rate (<1 cc/min) <1

Pretest Vacuum 30 in H_2O 0.30 in/min Leakrate (<1.6 in/min)

Post Test Vacuum 30 in H_2O 0.30 in/min Leakrate (<1.6 in/min)

SO_2 / Toluene

DRY GAS METER

Meter # 75021

Meter Coef: 0.995

Date Calibrated

	Time Clock/Sample	Mass Flow Meter Reading	Source Volumetric Flow Data: Cubic feet	Dry Gas Meter Temp(F)	Static Press (in H_2O)
I	1445	100 cc/min	100	92	0.3
1	1455	105	176	92	0.3
2	1505	105	251	92	0.3
3	1515	110	331	92	0.3
4	1525	105	521	92	0.3
5	1535	100	579	92	0.3
6	1545	100	680	92	0.3
7					
8					
9					
10					
11					
12					
Total	60	725	580 CF		2.1
Average		104 cc/min		92 (552R)	0.3 (30.05)

BONNER ANALYTICAL TESTING COMPANY
RT. 14, BOX 509
HATTIESBURG, MS 39402
(601) 264-2854

BYRON METHOD 25 Lab Data Sheet

FACILITY Hercules

LOCATION 033 Polypate-WES RUN One (1)

Bag I.D. 031
Volume Collected 6.240 Volume Analyzed 6.240
if changed, why

Trap I.D. 031
Volume Collected 6.240 Burnout Volume 7500

BAG ANALYSIS

Date 5/30/88 Analyst MSB/HP

				Average
NMHC	42050	41030	39990	41023
CO	27500	27840	28800	28050
CO_2	280790	269750	288500	279680
CH_4	21960	21840	21770	21860

TRAP ANALYSIS

Date 5/30/88 Temperature 300°C Analyst MSB/SH

				Average
NMHC	<3	<3	<3	<3
CO	<3	<3	<3	<3
CO_2	7085	7263	7420	7256
CH_4	<3	<3	<3	<3

General Comments

VOC = volatile organic carbon - This is the sum of the VOC collected in the trap plus any VOC that passes through the trap into the bag. In the analysis the bag portion is the BAG NMHC (nonmethane hydrocarbon); the trap is burned out and all the VOC converted to carbon dioxide prior to analysis thus the trap portion is the TRAP CO_2.

$$VOC_t \text{ lb/hr} = \frac{(VOC\ BAG_{ave} + VOC\ TRAP_{ave})\ SCFH}{32 \times 10^6}$$

$$VOC_t \text{ lb/hr} = \frac{(41023 \text{ bag} + 7256 \text{ trap})\ 554.4 \text{ SCFH}}{32 \times 10^6}$$

VOC_t = 9836

BONNER ANALYTICAL TESTING COMPANY
RT. 14, BOX 509
HATTIESBURG, MS 39402
(601) 264-2854

Sulfur Dioxide

NIOSH Method
P & CAM 163

Facility Hercules Inc

Location 033 Polypale WSV-West

Date 5/20/88 Run Number 1 Operator JS/MSB/JP

1. Volume of air sampled (SCM) = V_m (STD)

$$V_m(STD) = V_m\left(\frac{29.92 \times T_{obs}}{P_{bar} \times 528}\right)^{0.5} \times 10^{-3}$$

$$= (36)\left(\frac{29.92 * 552}{30.03 * 528}\right)^{0.5} * 10^{-3}$$

$$= \boxed{0.0367\ M^3}$$

2. Concentration of Sulfur Dioxide (mg/scm) = C (mg/scm)

$$C(mg/scm) = \frac{(ml_t - ml_{blk})(N_{Bacl_4})(MW_{SO_2})}{V_m^3}\left(\frac{V}{Valid}\right)$$

$$= \frac{(36.3)(0.01)(64)(50)}{(0.0367)(1.0)}$$

$$= \boxed{31615\ mg/scm}$$

3. Concentration of (SO2) in (lb/scf) = C (lb/scf)

$$C(lb/scf) = \frac{C(mg/scm)}{1.602 \times 10^7} = \frac{31615}{1.602 * 10^7}$$

$$= \boxed{1.973 * 10^{-3}\ lb/SCF}$$

4. Mass Loading of SO2 = ml (lb/hr)

$$ml(lb/hr) = C(lb/scf) \times \frac{SCF}{HR}$$

$$= 1.973 * 10^{-3} * 554.4$$

$$Ml = \boxed{1.093\ lb/HR}\ SO_2$$

BONNER ANALYTICAL TESTING COMPANY
RT. 14, BOX 509
HATTIESBURG, MS 39401
(601) 264-2854

Facility Hercules Inc

Location 033 Polypale WSV - West

Run 1

1. Standard Cubic Feet Per Run (Vms)

$$Vms = 17.647 \times Ym \, (Vmf - Vmi) \frac{(Pb + \frac{DPm}{13.6})}{Tm}$$

$$Vms = 17.647 * (0.995)(580)\left(\frac{30.05}{552}\right)$$

$$= \boxed{554.4}$$

2. Standard Cubic Feet Per Hour (SCFH)

$$SCFH = \frac{Vms}{HR} \qquad \boxed{554.4}$$

3. Gas Flow Rate

$$Qs = \frac{Vms}{J}$$

BONNER ANALYTICAL TESTING COMPANY
RT. 14, BOX 509
HATTIESBURG, MS 39402
(601) 264-2854

EPA METHOD 25

VOLATILE ORGANIC CARBON

Facility Hercules Inc

Location 033 Polypale ASV-West

Date 05/20/88 Operators JLS/MSB/JP

Run # 2
Bag # 032
Trap # 032

Barometric Press (in Hg) 30.03

Ambient Temp. (F) 86

Wet Bulb 82
Dry Bulb 92
% Moisture <1

Sample Train Leak Rate ((1 cc/min) <1

Pretest Vacuum 30 in H_2O 0.30 in/min Leakrate ((1.6 in/min)

Post Test Vacuum 30 in H_2O 0.30 in/min Leakrate ((1.6 in/min)

DRY GAS METER

Meter # 75021

Meter Coef: 0.995

Date Calibrated 5/19/88

	Time	Mass Flow	Source Volumetric Flow Data		
	Clock/Sample	Meter Reading	Cubic feet	Dry Gas Meter Temp(F)	Static Press (in H_2O)
I	1555	100	713	92	0.3
1	1605	100	786	92	0.3
2	1615	100	819	92	0.3
3	1625	100	868	92	0.3
4	1635	100	914	92	0.3
5	1645	100	960	92	0.3
6	1655	100	1014	92	0.3
7					
8					
9					
10					
11					
12					
Total	60		301 CF		
Average		100cc/min		92 (552R)	0.3 (30.05)

BONNER ANALYTICAL TESTING COMPANY
RT. 14, BOX 509
HATTIESBURG, MS 39402
(601) 264-2854

OK

BYRON METHOD 25 Lab Data Sheet

FACILITY Hercules

LOCATION 033 Polypropylene WSV-WEST RUN 2

Bag I.D. 032
Volume Collected 6.000 Volume Analyzed 6.000
if changed, why

Trap I.D. 032
Volume Collected 6.000 Burnout Volume 5.000

BAG ANALYSIS Date 5/30/88 Analyst MSB/JP

				Average
NMHC	131956	128845	137015	132605
CO	26873	25966	26142	26327
CO_2	282926	280926	285449	283100
CH_4	16564	16931	16844	16780

TRAP ANALYSIS

Date 5/30/88 Temperature 300 Analyst MSB/

				Average
NMHC	<3	<3	<3	<3
CO	<3	<3	<3	<3
CO_2	6952	6875	7005	6944
CH_4	<3	<3	<3	<3

General Comments

VOC = volatile organic carbon - This is the sum of the VOC collected in the trap plus any VOC that passes through the trap into the bag. In the analysis the bag portion is the BAG NMHC (nonmethane hydrocarbon); the trap is burned out and all the VOC converted to carbon dioxide prior to analysis thus the trap portion is the TRAP CO_2.

$$VOC_t \text{ lb/hr} = \frac{(VOC\ BAG_{ave} + VOC\ TRAP_{ave})\ SCFH}{32 \times 10^6}$$

$$VOC_t \text{ lb/hr} = \frac{(132605 \text{ bag} + 6944 \text{ trap})\ 287.7\ SCFH}{32 \times 10^6}$$

VOC_t = 1.254 lb/hr

BUNNER ANALYTICAL TESTING COMPANY
RT. 14, BOX 509
HATTIESBURG, MS 39402
(601) 264-2854

Sulfur Dioxide

NIOSH Method
P & CAM 163

Facility Hercules Inc

Location 033-Polypale WSV-West

Date 5/20/88 Run Number 2 Operator JP/MSB/RS

1. Volume of air sampled (SCM) = V_m (STD)

$$V_m(STD) = V_m\left(\frac{29.92 \times T_{obs}}{P_{bar} \times 528}\right)^{0.5} \times 10^{-3}$$

$$= (36)\left(\frac{29.92 \times 552}{30.03 \times 528}\right)^{0.5} * 10^{-3}$$

$$= \boxed{0.0367M}$$

2. Concentration of Sulfur Dioxide (mg/scm) = C (mg/scm)

$$C(mg/scm) = \frac{(ml_t - ml_{blk})(N_{Bocl04})(MW_{SO2})}{V_m} \left(\frac{V}{V_{alid}}\right)$$

$$= \frac{(44.1)(0.01)(64)(50)}{(0.0367)(1)}$$

$$= \boxed{38452}$$

3. Concentration of (SO2) in (lb/scf) = C (lb/scf)

$$C(lb/scf) = \frac{C(mg/scm)}{1.602 \times 10^{7}} \qquad \frac{38452}{1.602 * 10^{7}}$$

$$= \boxed{2.400 * 10^{-3}}$$

4. Mass Loading of SO2 = ml (lb/hr)

$$ml(lb/hr) = C(lb/scf) \times \frac{SCF}{HR}$$

$$= 2.400 * 10^{-3} * 287.7$$

$$= \boxed{0.691 lb/Hr}$$

BONNER ANALYTICAL TESTING COMPANY
RT. 14, BOX 509
HATTIESBURG, MS 39401
(601) 264-2854

Facility HERCules Inc

Location 033 Polypale WSV-West

Run 2

1. Standard Cubic Feet Per Run (Vms)

$$Vms = 17.647 \times Ym \ (Vmf - Vmi) \ \frac{(Pb + 13.6)}{Tm}^{DPm}$$

$$Vms = 17.647 * 0.995 * \left(\frac{301}{~~534~~}\right)\left(\frac{30.05}{552}\right)$$

$$= ~~5345~~ \quad 287.7$$

2. Standard Cubic Feet Per Hour (SCFH)

$$SCFH = \frac{Vms}{HR} \qquad ~~534.5~~ \quad 287.7$$

3. Gas Flow Rate

$$Qs = \frac{Vms}{J}$$

RT. 14, BOX 509
HATTIESBURG, MS 39402
(601) 264-2854

EPA METHOD 25

VOLATILE ORGANIC CARBON

Facility Hercules

Location 033 - Polypale WSV - West

Date 5/20/88 Operators JLS/MSB/JP

Run # 3
Bag # 033
Trap # 033

Barometric Press (in Hg) 30.03

Ambient Temp. (F) 88

Wet Bulb ~~87~~ 87
Dry Bulb 108
% Moisture <1

Sample Train Leak Rate (<1 cc/min) <1

Pretest Vacuum 30 in H_2O 0.30 in/min Leakrate (<1.6 in/min)

Post Test Vacuum 30 in H_2O 0.30 in/min Leakrate (<1.6 in/min)

DRY GAS METER

Meter # 75021

Meter Coef: 0.995

Date Calibrated 5/19/88

	Source Volumetric Flow Data					
	Time	Mass Flow		Dry Gas Meter		Static
	Clock/Sample	Meter Reading	Cubic feet	Temp(F)	Press (in H_2O)	
I	1700	106 cc/min	1021	92	~~92~~	~~0.3~~ 0.3
1	1710	100	1040	92	~~92~~	~~0.3~~ 0.3
2	1720	105	1076	92	~~92~~	0.3
3	1730	105	1251	92	~~92~~	0.3
4	1740	105	1306	92	~~92~~	0.3
5	1750	105	1366	92	~~92~~	0.3
6	1800	100	1408	92	~~92~~	0.3
7						
8						
9						
10						
11						
12						
Total	60	720	387 CF			
Average		103 cc/min		92 (552R)	0.3	(30.05)

BONNER ANALYTICAL TESTING COMPANY
RT. 14, BOX 509
HATTIESBURG, MS 39402
(601) 264-2854

BYRON METHOD 25 Lab Data Sheet

FACILITY Hercules Inc

LOCATION 033 Polypole WSV RUN 3

Bag I.D. 033
Volume Collected 6.180 Volume Analyzed 6.180
if changed, why

Trap I.D. 033
Volume Collected 6.180 Burnout Volume

BAG ANALYSIS Date 5/30/88 Analyst MSB/JP

				Average
NMHC	161225	167242	164778	164415
CO	31151	31925	30749	31275
CO_2	308080	300451	304044	304192
CH_4	18479	18113	17969	18187

TRAP ANALYSIS

Date 5/25/88 Temperature 300 Analyst JP

				Average
NMHC	<3	<3	<3	<3
CO	21.9	21.1	21.1	21
CO_2	14790	14715	15123	14876
CH_4	<3	<3	<3	<3

General Comments

VOC = volatile organic carbon - This is the sum of the VOC collected in the trap plus any VOC that passes through the trap into the bag. In the analysis the bag portion is the BAG NMHC (nonmethane hydrocarbon); the trap is burned out and all the VOC converted to carbon dioxide prior to analysis thus the trap portion is the TRAP CO_2.

$$VOC_t \text{ lb/hr} = \frac{(VOC\ BAG_{ave} + VOC\ TRAP_{ave})\ SCFH}{32 \times 10^6}$$

$$VOC_t \text{ lb/hr} = \frac{(164415\ \text{bag} + 14876\ \text{trap})\ 369.9\ SCFH}{32 \times 10^6}$$

VOC_t = 2.07 lb/hr

RT. 14, BOX 509
HATTIESBURG, MS 39402
(601) 264-2854

Sulfur Dioxide

NIOSH Metnoo
P & CAM 163,

Facility Hercules Inc

Location 033 Polypale WSV-West

Date 5/20/88 Run Number 3 Operator P/B/S

1. Volume of air sampled (SCM) = V_m (STD)

$$V_{m(STD)} = V_m \left(\frac{29.92 \times T_{obs}}{P_{bar} \times 528}\right)^{0.5} \times 10^{-3}$$

$$= 36\left(\frac{29.92 * 552}{30.03 * 528}\right)^{0.5} * 10^{-3}$$

$$= \boxed{0.0367}$$

2. Concentration of Sulfur Dioxide (mg/scm) = C (mg/scm)

$$C_{(mg/scm)} = \frac{(ml_t - ml_{blk})(N_{Bacl_4})(MW_{SO_2})}{V_m^3} \left(\frac{V}{V_{alip}}\right)$$

$$= \frac{(45.9)(0.01)(64)(50)}{(0.0367)(1)}$$

$$= \boxed{40022}$$

3. Concentration of (SO2) in (lb/scf) = C (lb/scf)

$$C_{(lb/scf)} = \frac{C_{(mg/scm)}}{1.602 \times 10^{7}}$$

~~257,000~~ $\frac{40022}{1.602 * 10^{7}}$

$$= ~~4.605 \times 10^{-2}~~$$

$$= 2.498 * 10^{-3}$$

4. Mass Loading of SO2 = ml (lb/hr)

$$ml_{(lb/hr)} = C_{(lb/scf)} \times \frac{SCF}{HR}$$

$$= ~~1.605 \times 10^{-2} \times~~ 2.498 * 10^{-3} * 369.9$$

$$= ~~8900 \text{ lb/HR}~~$$

$$= \boxed{0.924 \text{ lb/Hr}}$$

BONNER ANALYTICAL TESTING COMPANY
RT. 14, BOX 509
HATTIESBURG, MS 39401
(601) 264-2854

Facility Hercules

Location 033 Polypale WSV-West.

Run 5/20/88 #3

1. Standard Cubic Feet Per Run (Vms)

$$Vms = 17.647 \times Ym \ (Vmf - Vmi) \ \frac{(Pb + \frac{DPm}{13.6})}{Tm}$$

$$Vms = 17.647 * (0.995)\left(\frac{387}{\cancel{580}}\right)\left(\frac{30.05}{552}\right)$$

$$= \boxed{369.9}$$

2. Standard Cubic Feet Per Hour (SCFH)

$$SCFH = \frac{Vms}{HR} \quad \boxed{369.9}$$

3. Gas Flow Rate

$$Qs = \frac{Vms}{J}$$

Facility: Hercules Inc Method 18

Location: 033 Polypale West

Analyte: Toluene

Pbar 30.01
Tobs 532°R

1. Nanograms of standard injected @ STP (NGSTD)

$$NG(STD) = NGobs \times \frac{(29.92 \times Tobs)^{0.5}}{Pbar \times 528}$$

STD1 = 250 x $\frac{29.92 * 532}{30.01 * 528}$ = 251

STD2 = 500 x 1.002 = ~~505~~ 501

STD3 = 1000 x 1.002 = 1002

2. Concentration of Analyte mg/m³ @ STP CSTD

$$CSTD = \frac{AA \times 1 \times 10^{-3}}{RfSTD \times Vi \times \frac{(29.92 \times Tobs)^{0.5}}{Pbar \times 528}}$$

Run 1 = $\frac{1375799 \times 1 \times 10^{-3}}{570 \times 1*10^{-4} \times 1.002}$ = 24088

Run 2 = $\frac{2434655 \times 1 \times 10^{-3}}{570 \times 1*10^{-4} \times 1.002}$ = 42628

Run 3 = $\frac{3019352 \times 1 \times 10^{-3}}{570 \times 1*10^{-4} \times 1.002}$ = 52865

3. Parts per million of Analyte @ STP (PPM)

$$PPM = CSTD \times \frac{24.05}{MW}$$

Run 1 24088 x $\frac{24.05}{92}$ = 6,297

Run 2 42628 x $\frac{24.05}{92}$ = 11,144

Run 3 52865 x $\frac{24.05}{92}$ = 13,820

4. Mass Loading of Analyte (STP) lb/hr (MSTD)

$$MSTD = \frac{CSTD \times SCFH}{1.6019 \times 107}$$

Run 1 = $\frac{24088 \times 554.4}{1.6019 \times 107}$ = 0.834

Run 2 = $\frac{42628 \times 287.7}{1.6019 \times 107}$ = 0.766

Run 3 = $\frac{52865}{\text{~~13820~~}} \times \frac{369.9}{1.6019 \times 107}$ = ~~0.319~~ 1.220

FIELD DATA SHEET VOLATILE HYDROCARBONS

Facility: Hercules Inc

Location: 00033 Polypale West

Date: 5/20/88 Operators JP/MSB/JS

Analyte: ~~Toluene~~ Toluene

	Run 1	Run 2	Run 3
Sample Temp (F	92	92	88
Barometric press (in Hg)	30.03	30.03	30.03
Ambient Temperature (F)	86	86	88
Sample flow rate Liter/min	0.100	0.100	0.100
Bag ID	033W/1	033W/2	033W/3
Start Time	1445	1555	1700
End Time	1545	1655	1800

Sulfur Dioxide

FIELD DATA SHEET ~~VOLATILE HYDROCARBONS~~

Facility: Hercules Inc

Location: ~~003~~ 033 Polypale - West

Date: 5/20/88 Operators JP/MSB/RS

Analyte: Sulfur Dioxide

	Run 1	Run 2	Run 3
Sample Temp (F	92	92	88
Barometric press (in Hg)	30.03	30.03	30.03
Ambient Temperature (F)	86	86	88
Sample flow rate L/min	0.6	0.6	0.6
~~Bag ID~~ Impinger ID	033W1/1-3	033W2/1-3	033W3/1-3
Start Time	1445	1555	1700
End Time	1545	1655	1800
Pretest Leak check (<1 cc/min)	<1	<1	<1
Post test	<1	<1	<1

Facility: HERCules Method 18-GC/MS

Location: 033-Polypale West Sample Type Bag

Date: 5/20/88

Analyte: Toluene Operator: MSB/DM

Calibration Data: GC - GC/MS

	STANDARD	Amt (ng) STD	AREA			Ave Area	Ave Area/ng
1.	250	251	115090	135986	141250	130775	523
2.	500	501	291973	288456	297126	292518	585
3.	1000 / 1250	1002	585963 / 746001	566451	571224	574479 ~~599~~	574 / 597

Rf (STD) = 570

Sample	Area	Samp Vol. (L)	mg/m³ (STD)	PPM (STD)	lb/hr (STD)
Run 1A	1399329	$1*10^{-4}$			
1B	1307676	$1*10^{-4}$			
1C	1420892	$1*10^{-4}$			
Ave (AA)	1375799	$1*10^{-4}$	24088	6297	0.834
2A	2400661	$1*10^{-4}$			
2B	2439927	$1*10^{-4}$			
2C	2463378	$1*10^{-4}$			
Ave (AA)	2434655	$1*10^{-4}$	42628	11,144	0.766
3A	2919255	$1*10^{-4}$			
3B	3091137	$1*10^{-4}$			
3C	3049664	$1*10^{-4}$			
Ave (AA)	3019352	$1*10^{-4}$	52865	13820	1.220

MISSISSIPPI DEPARTMENT OF NATURAL RESOURCES
Bureau of Pollution Control
P.O. Box 10385
Jackson, Mississippi 39289-0385
(601) 961-5171

MEMORANDUM

TO: File

FROM: Jesse Thompson, Jr.

SUBJECT: Stack Test Review

DATE: June 2, 1989

Facility No. 110-0800-00001-042

The review of the Flaking Belt vapor water scrubber has been finished. The review did not reveal any problems. The emission point was sampled using Method 25. I recommend that the test be accepted.

JT:dfj

BONNER ANALYTICAL TESTING COMPANY
RT. 14, BOX 509
HATTIESBURG, MS 39402
(601) 264-3854

EPA METHOD 25

VOLATILE ORGANIC CARBON

Facility Hercules, Inc.

Location 042 - Flaker

Date 5/24/88 Operators DH/JP/MSB

Run # 1
Bag # 009
Trap # 009

Barometric Press (in Hg) 30.08

Ambient Temp. (F) 77

Wet Bulb 70
Dry Bulb 91
% Moisture <1

Sample Train Leak Rate (<1 cc/min) <1

Pretest Vacuum 30 in H_2O 0.30 in/min Leakrate (<1.6 in/min)

Post Test Vacuum 30 in H_2O 0.30 in/min Leakrate (<1.6 in/min)

DRY GAS METER

Meter # 336323

Meter Coef: 0.991

Date Calibrated 5/19/88

Source Volumetric Flow Data

	Time	Mass Flow		Dry Gas Meter		Static
	Clock/Sample	Meter Reading	Cubic feet	Temp (F)	Press (in H_2O)
I	0910	120 cc/min	493.35	90	<0.1
1	0920	120 cc/min	493.35	92	<0.1
2	0930	120 cc/min	493.35	94	<0.1
3	0940	120 cc/min	493.35	96	<0.1
4	0950	120 cc/min	493.35	100	<0.1
5	1000	120 cc/min	493.35	100	<0.1
6	1010	120 cc/min	493.35	100	<0.1
7					
8					
9					
10					
11					
12					

Total 60 0 Discharge

Average 120 cc/min 96 (556R) (30.08)

BONNER ANALYTICAL TESTING COMPANY
RT. 14, BOX 509
HATTIESBURG, MS 39402
(601) 264-2854

BYRON METHOD 25 Lab Data Sheet

FACILITY Hercules, Inc.

LOCATION 042 - Flaker RUN #1

Bag I.D. 009
Volume Collected 7.200 Volume Analyzed 7.200
if changed, why

Trap I.D. 009
Volume Collected 7.200 Burnout Volume 5.000

BAG ANALYSIS

Date 5/28/88 Analyst JP/ MSB

				Average
NMHC	1090	1095	1090	1092
CO	108	108	110	109
CO_2	3169	3102	3099	3123
CH_4	<3	<3	<3	<3

TRAP ANALYSIS

Date 5/29/88 Temperature 300 C Analyst MSB

				Average
NMHC	<3	<3	<3	<3
CO	<3	<3	<3	<3
CO_2	258	252	252	254
CH_4	<3	<3	<3	<3

General Comments

VOC = volatile organic carbon - This is the sum of the VOC collected in the trap plus any VOC that passes through the trap into the bag. In the analysis the bag portion is the BAG NMHC (nonmethane hydrocarbon); the trap is burned out and all the VOC converted to carbon dioxide prior to analysis thus the trap portion is the TRAP CO_2.

$$VOC_+ \text{ lb/hr} = \frac{(VOC\ BAG_{ave} + VOC\ TRAP_{ave})\ SCFH}{32 \times 10^6}$$

$$VOC_+ \text{ lb/hr} = \frac{(1092 \text{ bag} + 254 \text{ trap})\ 0 \text{ Discharge SCFH}}{32 \times 10^6}$$

VOC_+ = 1346 PPM ; Mass loading can not be calculated

BONNER ANALYTICAL TESTING COMPANY
RT. 14, BOX 509
HATTIESBURG, MS 39401
(601) 264-2854

Facility Hercules, Inc.

Location 042 - Flaker

Run #1

1. Standard Cubic Feet Per Run (Vms)

$$Vms = 17.647 \times Ym \ (Vmf - Vmi) \ \frac{(Pb + \frac{\Delta Pm}{13.6})}{Tm}$$

= 0 Discharge

2. Standard Cubic Feet Per Hour (SCFH)

$$SCFH = \frac{Vms}{HR} = \text{0 Discharge}$$

3. Gas Flow Rate

$$Qs = \frac{Vms}{\theta}$$

RT. 14, BOX 509
HATTIESBURG, MS 39402
(601) 264-2854

EPA METHOD 25

VOLATILE ORGANIC CARBON

Facility Hercules, Inc.

Location 042 - Flaker

Date 5/21/88 Operators DH/JP/MSB

Run # 2
Bag # 011
Trap # 011

Barometric Press (in Hg) 30.08

Ambient Temp. (F) 76

Wet Bulb 71
Dry Bulb 92
% Moisture <1

Sample Train Leak Rate (<1 cc/min) <1

Pretest Vacuum 30 in H_2O 0.30 in/min Leakrate (<1.6 in/min)

Post Test Vacuum 30 in H_2O 0.35 in/min Leakrate (<1.6 in/min)

DRY GAS METER

Meter # 336323

Meter Coef: 0.991

Date Calibrated 5/19/88

	Source Volumetric Flow Data				
	Time	Mass Flow		Dry Gas Meter	Static
	Clock/Sample	Meter Reading	Cubic feet	Temp (F)	Press (in H_2O)
I	1015	105 cc/min	493.35	92	<0.1
1	1025	105 cc/min	493.35	92	<0.1
2	1035	105 cc/min	493.35	92	<0.1
3	1045	105 cc/min	493.35	92	<0.1
4	1055	105 cc/min	493.35	92	<0.1
5	1105	105 cc/min	493.35	92	<0.1
6	1115	105 cc/min	493.35	92	<0.1
7					
8					
9					
10					
11					
12					

Total 60 0 Discharge

Average 105 cc/min (6.300) 92 (552R) <0.1 (30.08)

BYRON TESTING COMPANY
RT. 14, BOX 509
HATTIESBURG, MS 39402
(601) 264-2954

BYRON METHOD 25 Lab Data Sheet

FACILITY Hercules, Inc.

LOCATION 042 - Flaker RUN #2

Bag I.D. 011
Volume Collected 6.300 Volume Analyzed 6.300
if changed, why

Trap I.D. 011
Volume Collected 6.300 Burnout Volume 5.000

BAG ANALYSIS

Date 5/28/88 Analyst MSB

				Average
NMHC	965	977	982	974
CO	97	97	99	98
CO_2	2620	2695	2654	2656
CH_4	<3	<3	<3	<3

TRAP ANALYSIS

Date 5/29/88 Temperature 300 C Analyst MSB

				Average
NMHC	<3	<3	<3	<3
CO	<3	<3	<3	<3
CO_2	451	439	442	444
CH_4	<3	<3	<3	<3

General Comments

VOC = volatile organic carbon - This is the sum of the VOC collected in the trap plus any VOC that passes through the trap into the bag. In the analysis the bag portion is the BAG NMHC (nonmethane hydrocarbon); the trap is burned out and all the VOC converted to carbon dioxide prior to analysis thus the trap portion is the TRAP CO_2.

$$VOC_+ \text{ lb/hr} = \frac{(VOC\ BAG_{ave} + VOC\ TRAP_{ave})\ SCFH}{32 \times 10^6}$$

$$VOC_+ \text{ lb/hr} = \frac{(974 \text{ bag} + 444 \text{ trap})\ 0 \text{ Discharge SCFH}}{32 \times 10^6}$$

VOC_+ = 1418 PPM ; Mass loading can not be calculated

BONNER ANALYTICAL TESTING COMPANY
RT. 14, BOX 509
HATTIESBURG, MS 39401
(601) 264-2854

Facility Hercules, Inc.

Location 042 - Flaker

Run #2

1. Standard Cubic Feet Per Run (Vms)

$$Vms = 17.647 \times Ym \ (Vmf - Vmi) \ \frac{(Pb + \frac{\Delta Pm}{13.6})}{Tm}$$

= 0 Discharge

2. Standard Cubic Feet Per Hour (SCFH)

$$SCFH = \frac{Vms}{HR} = 0 \text{ Discharge}$$

3. Gas Flow Rate

$$Qs = \frac{Vms}{\theta}$$

BONNER ANALYTICAL TESTING COMPANY
RT. 14, BOX 509
HATTIESBURG, MS 39402
(601) 264-2854

EPA METHOD 25

VOLATILE ORGANIC CARBON

Facility Hercules, Inc.

Location 042 - Flaker

Date 5/21/88 Operators DH/JP/MSB

Run # 3
Bag # 016
Trap # 016

Barometric Press (in Hg) 30.08

Ambient Temp. (F) 79

Wet Bulb 72
Dry Bulb 92
% Moisture <1

Sample Train Leak Rate (<1 cc/min) <1

Pretest Vacuum 30 in H_2O 0.35 in/min Leakrate (<1.6 in/min)

Post Test Vacuum 30 in H_2O 0.35 in/min Leakrate (<1.6 in/min)

DRY GAS METER

Meter # 336323

Meter Coef: 0.991

Date Calibrated 5/19/88

	Source Volumetric Flow Data				
	Time	Mass Flow		Dry Gas Meter	Static
	Clock/Sample	Meter Reading	Cubic feet	Temp (F)	Press (in H_2O)
I	1120		493.35	92	<0.1
1	1130	105 cc/min	493.35	92	<0.1
2	1140	105 cc/min	493.35	90	<0.1
3	1150	105 cc/min	493.35	88	<0.1
4	1200	105 cc/min	493.35	88	<0.1
5	1210	105 cc/min	493.35	88	<0.1
6	1220	105 cc/min	493.35	88	<0.1
7					
8					
9					
10					
11					
12					
Total	60		0 Discharge		
Average		105 cc/min (6.300)		90 (550R)	<0.1 (30.08)

BONNER ANALYTICAL TESTING COMPANY
RT. 14, BOX 509
HATTIESBURG, MS 39402
(601) 264-2854

BYRON METHOD 25 Lab Data Sheet

FACILITY Hercules, Inc.

LOCATION 042 - Flaker RUN #3

Bag I.D. 016
Volume Collected 6.300 Volume Analyzed 6.300
if changed, why

Trap I.D. 016
Volume Collected 6.300 Burnout Volume 5.000

BAG ANALYSIS

Date 5/28/88 Analyst JP/MSB

				Average
NMHC	1956	1991	1897	1948
CO	<3	<3	<3	<3
CO_2	4609	4691	4556	4619
CH_4	<3	<3	<3	<3

TRAP ANALYSIS

Date 5/30/88 Temperature 300 C Analyst JP/MSB

				Average
NMHC	<3	<3	<3	<3
CO	<3	<3	<3	<3
CO_2	2605	2571	2534	2570
CH_4	<3	<3	<3	<3

General Comments

VOC = volatile organic carbon - This is the sum of the VOC collected in the trap plus any VOC that passes through the trap into the bag. In the analysis the bag portion is the BAG NMHC (nonmethane hydrocarbon); the trap is burned out and all the VOC converted to carbon dioxide prior to analysis thus the trap portion is the TRAP CO_2.

$$VOC_+ \text{ lb/hr} = \frac{(\text{VOC BAG}_{ave} + \text{VOC TRAP}_{ave})\ \text{SCFH}}{32 \times 10^6}$$

$$VOC_+ \text{ lb/hr} = \frac{(1948 \text{ bag} + 2570 \text{ trap})\ Q\ \text{Discharge SCFH}}{32 \times 10^6}$$

VOC_+ = 4518 PPM

BONNER ANALYTICAL TESTING COMPANY
RT. 14, BOX 509
HATTIESBURG, MS 39401
(601) 264-2854

Facility Hercules, Inc.

Location 042 - Flaker

Run #3

1. Standard Cubic Feet Per Run (Vms)

$$Vms = 17.647 \times Ym \ (Vmf - Vmi) \ \frac{(Pb + \frac{\Delta Pm}{13.6})}{Tm}$$

Vms = Zero Discharge

2. Standard Cubic Feet Per Hour (SCFH)

$$SCFH = \frac{Vms}{HR} = 0 \text{ Discharge}$$

3. Gas Flow Rate

$$Qs = \frac{Vms}{\theta}$$

BONNER ANALYTICAL TESTING COMPANY
RT. 14, BOX 509
HATTIESBURG, MS 39402
(601) 264-2854

EPA METHOD 25

VOLATILE ORGANIC CARBON

Facility Hercules Inc

Location 042 - Flaker

Date 5/21/88 Operators DH/GP/MSB

Run # 1
Bag # 009
Trap # 009

Barometric Press (in Hg) 30.08

Ambient Temp. (F) 77

Wet Bulb 70
Dry Bulb 91
% Moisture <1

Sample Train Leak Rate (<1 cc/min) <1

Pretest Vacuum 30 in H_2O 0.30 in/min Leakrate (<1.6 in/min)

Post Test Vacuum 30 in H_2O 0.30 in/min Leakrate (<1.6 in/min)

DRY GAS METER

Meter # 336323

Meter Coef: 0.991

Date Calibrated 5/19/88

	Time Clock/Sample	Mass Flow Meter Reading	Source Volumetric Flow Data: Cubic feet	Dry Gas Meter Temp(F)	Static Press (in H_2O)
I	0910	120 cc/min	493.35	90	<0.1
1	0920	120	493.35	92	<0.1
2	0930	120	493.35	94	<0.1
3	0940	120	493.35	96	<0.1
4	0950	120	493.35	100	<0.1
5	1000	120	493.35	100	<0.1
6	1010	120	493.35	100	<0.1
7					
8					
9					
10					
11					
12					

Total 60 Zero flow

Average 120 96 (556R) (30.08)

BONNER ANALYTICAL TESTING COMPANY
RT. 14, BOX 509
HATTIESBURG, MS 39402
(601) 264-2854

BYRON METHOD 25 Lab Data Sheet

FACILITY Hercules Inc

LOCATION 042 - Flaker RUN 1

Bag I.D. 009
Volume Collected 7.200 Volume Analyzed 7.200
if changed, why

Trap I.D. 009
Volume Collected 7.200 Burnout Volume 5.000

BAG ANALYSIS Date 5/28/88 Analyst JP MSB

				Average
NMHC	1090	1095	1090	1092
CO	108	108	110	109
CO_2	3169	3102	3099	3123
CH_4	<3	<3	<3	<3

TRAP ANALYSIS Date 5/29/88 Temperature 300 Analyst MSB/JP

				Average
NMHC	<3	<3	<3	<3
CO	<3	<3	<3	<3
CO_2	~~391~~ 258	~~364~~ 252	~~364~~ 252	~~360~~ 254
CH_4	<3	<3	<3	<3

General Comments

VOC = volatile organic carbon - This is the sum of the VOC collected in the trap plus any VOC that passes through the trap into the bag. In the analysis the bag portion is the BAG NMHC (nonmethane hydrocarbon); the trap is burned out and all the VOC converted to carbon dioxide prior to analysis thus the trap portion is the TRAP CO_2.

$$VOC_t \text{ lb/hr} = \frac{(VOC\ BAG_{ave} + VOC\ TRAP_{ave})\ SCFH}{32 \times 10^6}$$

$$VOC_t \text{ lb/hr} = \frac{(1092 \text{ bag} + \frac{254}{\cancel{366}} \text{ trap})\ **\ SCFH}{32 \times 10^6}$$

VOC_t = 1346 PPM ~~ppm~~

** Zero Discharge Mass Loading can not be Calculated

BONNER ANALYTICAL TESTING COMPANY
RT. 14, BOX 509
HATTIESBURG, MS 39401
(601) 264-2854

Facility Hercules Inc

Location 042 - Flaker

Run 1

1. Standard Cubic Feet Per Run (Vms)

$$Vms = 17.647 \times Ym \ (Vmf - Vmi) \ \frac{(Pb + \frac{DPm}{13.6})}{Tm}$$

Vms = Zero Discharge

=

2. Standard Cubic Feet Per Hour (SCFH)

$$SCFH = \frac{Vms}{HR}$$ Zero Discharge

3. Gas Flow Rate

$$Qs = \frac{Vms}{J}$$

BUNNER ANALYTICAL TESTING COMPANY
RT. 14, BOX 509
HATTIESBURG, MS 39402
(601) 264-2854

EPA METHOD 25

VOLATILE ORGANIC CARBON

Facility Hercules Inc

Location 042 Flaker

Date 5/21/88 Operators DH/JP/MSB

Run # 2
Bag # @11
Trap # 011

Barometric Press (in Hg) 30.08

Ambient Temp. (F) 76

Wet Bulb 71
Dry Bulb 92
% Moisture <1

Sample Train Leak Rate (<1 cc/min) <1

Pretest Vacuum 30 in H_2O 0.30 in/min Leakrate (<1.6 in/min)

Post Test Vacuum 30 in H_2O 0.38 in/min Leakrate (<1.6 in/min)

DRY GAS METER

Meter # 336323

Meter Coef: 0.991

Date Calibrated 5/19/88

	Time Clock/Sample	Mass Flow Meter Reading	Source Volumetric Flow Data: Cubic feet	Dry Gas Meter Temp(F)	Static Press (in H_2O)
I	1015	105	493.35	92	<0.1
1	1025	105	493.38	92	<0.1
2	1035	105	493.38	92	<0.1
3	1045	105	493.35	92	<0.1
4	1055	105	493.35	92	<0.1
5	1105	105	493.35	92	<0.1
6	1115	105	493.35	92	<0.1
7					
8					
9					
10					
11					
12					

Total 60 Zero Discharge

Average 105 cc/min 92 (552R) <0.1 (30.08)

6.300

BONNER ANALYTICAL TESTING COMPANY
RT. 14, BOX 509
HATTIESBURG, MS 39402
(601) 264-2854

BYRON METHOD 25 Lab Data Sheet

FACILITY Hercules Inc

LOCATION 042 Flaker RUN 2

Bag I.D. 011
Volume Collected 6.300 Volume Analyzed 6.300
if changed, why

Trap I.D. 011
Volume Collected 6.300 Burnout Volume 5.000

BAG ANALYSIS Date 5/28/88 Analyst MSB

				Average
NMHC	965	977	982	974
CO	97	97	99	98
CO_2	2620	2695	2654	2656
CH_4	<3	<3	<3	<3

TRAP ANALYSIS

Date 5/29/88 Temperature 300 Analyst MSB

				Average
NMHC	<3	<3	<3	<3
CO	<3	<3	<3	<3
CO_2	451	439	442	444
CH_4	<3	<3	<3	<3

General Comments

VOC = volatile organic carbon - This is the sum of the VOC collected in the trap plus any VOC that passes through the trap into the bag. In the analysis the bag portion is the BAG NMHC (nonmethane hydrocarbon); the trap is burned out and all the VOC converted to carbon dioxide prior to analysis thus the trap portion is the TRAP CO_2.

$$VOC_t \text{ lb/hr} = \frac{(VOC\ BAG_{ave} + VOC\ TRAP_{ave})\ SCFH}{32 \times 10^6}$$

$$VOC_t \text{ lb/hr} = \frac{(974 \text{ bag} + 444 \text{ trap})\ \text{Zero Discharge SCFH}}{32 \times 10^6}$$

VOC_t = 1418 PPM (MASS Loading CAN not be Calculated)

RT. 14, BOX 509
HATTIESBURG, MS 39401
(601) 264-2854

Facility Herculon Inc

Location 042 - Flaker

Run 2

1. Standard Cubic Feet Per Run (Vms)

$$Vms = 17.647 \times Ym \, (Vmf - Vmi) \, \frac{(Pb + \frac{DPm}{13.6})}{Tm}$$

Vms = Zero Discharge

=

2. Standard Cubic Feet Per Hour (SCFH)

$$SCFH = \frac{Vms}{HR}$$ Zero Discharge

3. Gas Flow Rate

$$Qs = \frac{Vms}{J}$$

BONNER ANALYTICAL TESTING COMPANY
RT. 14, BOX 509
HATTIESBURG, MS 39402
(601) 264-2854

EPA METHOD 25

VOLATILE ORGANIC CARBON

Facility Hercules Inc

Location 042 Flaker

Date 08/21/88 Operators DH/JP/MSB

Run # 3
Bag # 016
Trap # 016

Barometric Press (in Hg) 30.08

Ambient Temp. (F) 79

Wet Bulb 72
Dry Bulb 92
% Moisture <1

Sample Train Leak Rate (<1 cc/min) <1

Pretest Vacuum 30 in H_2O 0.35 in/min Leakrate (<1.6 in/min)

Post Test Vacuum 30 in H_2O 0.35 in/min Leakrate (<1.6 in/min)

DRY GAS METER

Meter # 336323

Meter Coef: 0.991

Date Calibrated 8/19/88

	Time Clock/Sample	Mass Flow Meter Reading	Source Volumetric Flow Data: Cubic feet	Dry Gas Meter Temp(F)	Static Press (in H_2O)
I	1120	108	493.35	92	<0.1
1	1130	105	493.35	92	<0.1
2	1140	105	493.35	90	<0.1
3	1150	105	493.35	88	<0.1
4	1200	105	493.35	88	<0.1
5	1210	105	493.35	88	<0.1
6	1220	105	493.35	88	<0.1
7					
8					
9					
10					
11					
12					

Total 600 Zero Pickup

Average 105cc/min 90(550R) <0.1 30.08

6300

BONNER ANALYTICAL TESTING COMPANY
RT. 14, BOX 509
HATTIESBURG, MS 39402
(601) 264-2854

BYRON METHOD 25 Lab Data Sheet

FACILITY Hercules Inc

LOCATION 047 RUN 3

Bag I.D. 016
Volume Collected 6.300 Volume Analyzed 6.300
if changed, why

Trap I.D. 016
Volume Collected 6300 Burnout Volume 5.500

BAG ANALYSIS Date 3/28/88 Analyst MSB/DP

				Average
NMHC	1956	1991	1897	1948
CO	<3	<3	<3	<3
CO_2	4609	4691	4556	4619
CH_4	<3	<3	<3	<3

TRAP ANALYSIS Date 5/30/88 Temperature 300 Analyst MSB/DP

				Average
NMHC	<3	<3	<3	<3
CO	<3	<3	<3	<3
CO_2	2608	2571	2534	2570
CH_4	<3	<3	<3	<3

General Comments

VOC = volatile organic carbon - This is the sum of the VOC collected in the trap plus any VOC that passes through the trap into the bag. In the analysis the bag portion is the BAG NMHC (nonmethane hydrocarbon); the trap is burned out and all the VOC converted to carbon dioxide prior to analysis thus the trap portion is the TRAP CO_2.

$$VOC_t \text{ lb/hr} = \frac{(VOC\ BAG_{ave} + VOC\ TRAP_{ave})\ SCFH}{32 \times 10^6}$$

$$VOC_t \text{ lb/hr} = \frac{(1948 \text{ bag} + 2570 \text{ trap}) \text{ Zero Discharge SCFH}}{32 \times 10^6}$$

VOC_t = 1.518 PPM

BONNER ANALYTICAL TESTING COMPANY
RT. 14, BOX 509
HATTIESBURG, MS 39401
(601) 264-2854

Facility Hercules Inc

Location 042 - Flaker

Run 3

1. Standard Cubic Feet Per Run (Vms)

$$Vms = 17.647 \times Ym\ (Vmf - Vmi)\ \frac{(Pb + \frac{DPm}{13.6})}{Tm}$$

Vms = Zero Discharge

=

2. Standard Cubic Feet Per Hour (SCFH)

$$SCFH = \frac{Vms}{HR}$$ Zero Discharge

3. Gas Flow Rate

$$Qs = \frac{Vms}{J}$$

MISSISSIPPI DEPARTMENT OF NATURAL RESOURCES
Bureau of Pollution Control
P.O. Box 10385
Jackson, Mississippi 39289-0385
(601) 961-5171

MEMORANDUM



TO: File

FROM: Jesse Thompson, Jr.

SUBJECT: Stack Test Review

DATE: June 2, 1989

Facility No. 110-0800-00001-043

The review of the test data for emission point 043 has been finished. The recalculated results are attached and do not reveal any problems. I recommend that the test be accepted.

JT:dfj

HER-043-1

Plant Hercules, Inc.
Location Hattiesburg,
Operator DJM/JMW/BM
Date May 20, 1988
Run no. #1
Sample box no 001

Meter box no 001
Meter H@ 1.83
C factor 0.89
Pilot tube coefficient, Cp 0.84

Ambient temperature 85 F
Barometric pressure 29.92
Assumed moisture, % 15%
Probe length, (ft) 6
Nozzle identification no .246
Average calibrated nozzle diameter, cm (in) .246 in.
Probe heater setting 0
Leak rate m'/min, (cfm) (0.01
Probe liner material SS
Static pressure, mm. Hg (in. Hg) 29.9
Filter No. May 6

SCHEMATIC OF STACK CROSS SECTION

Start Time: 1231 hrs

End Time: 1350 hrs

T.P #	Sample time (min)	Vacuum (in. Hg)	Stack temp. (F) (Ts)	Velocity head (in) (p)	Pressure differ across orific meter	Gas sample volume (cf)	Gas Sample temp. @ dry gas meter Inlet (F)	Gas Sample temp. @ dry gas meter Outlet (F)	Filter holder temp. (F)	Temp. of gas leaving condenser or last impinger (F)
Initial						392.272				
1	4 min	2.0	77	.27	0.96	394.42	94	91	AMB	< 65
2	4 min	2.5	76	.32	1.15	396.57	97	92	AMB	< 65
3	4 min	3.0	76	.34	1.20	398.89	102	93	AMB	< 65
4	4 min	3.0	77	.35	1.25	401.24	104	93	AMB	< 65
5	4 min	3.0	76	.37	1.32	403.67	107	94	AMB	< 65
6	4 min	4.0	75	.44	1.60	406.38	110	95	AMB	< 65
7	4 min	4.0	77	.46	1.65	409.15	112	96	AMB	< 65
8	4 min	4.0	77	.47	1.70	411.86	116	98	AMB	< 65
9	4 min	1.0	76	.13	0.47	413.21	99	98	AMB	< 65
10	4 min	1.0	75	.31	1.10	415.29	101	99	AMB	< 65
11	4 min	2.5	74	.34	1.20	417.68	104	99	AMB	< 65
12	4 min	3.0	75	.38	1.35	420.21	108	99	AMB	< 65
13	4 min	3.5	76	.42	1.50	422.82	113	99	AMB	< 65
14	4 min	3.5	76	.42	1.50	425.41	116	100	AMB	< 65
15	4 min	3.5	74	.39	1.40	428.01	118	101	AMB	< 65
16	4 min	3.5	74	.35	1.25	430.493	119	102	AMB	< 65
17										
18										
19										
20										
21										
22										
23										
24										
T.				5.76	20.6	38.221	1720		AMB	< 65
Avg.			76	0.36	1.37		108	97		
			536 R				562 R			

BONNER ANALYTICAL TESTING COMPANY
RT. 13, BOX 85
HATTIESBURG, MS. 39401
(601)264-2854

NOMOGRAPH DATA

PLANT Hercules, Inc.

DATE 5/20/88

SAMPLING LOCATION 043

RUN #1

CALIBRATED PRESSURE DIFFERENTIAL ACROSS ORIFICE, in. H_2O	H @	1.83
AVERAGE METER TEMPERATURE (Ambient + 25 F) F	T_m avg.	105 F
PERCENT MOISTURE IN GAS STREAM BY VOLUME	B_{wo}	15
BAROMETRIC PRESSURE AT METER, in. Hg	P_m	29.92
STATIC PRESSURE IN STACK, in. Hg (P_m 29.92 + (.073)(-0.05) +0.073 x STACK GUAGE PRESSURE in in. H_2O	P_s	29.916
RATIO OF STATIC PRESSURE TO METER PRESSURE	P_s / P_m	1.00
AVERAGE STACK TEMPERATURE, F	T_s avg.	72
AVERAGE VELOCITY HEAD, in. H_2O	p avg.	.325
MAXIMUM VELOCITY HEAD, in. H_2O	p avg.	.45
C FACTOR	.89	
CALCULATED NOZZLE DIAMRTER, in.	.277	
ACTUAL NOZZLE DIAMETER, in.	.246	
REFERENCE p, in. H_2O	.52	

HER-043-1

1. Summary of Field Data

Run #1

1. Ambient Temperature (F): 85 F
2. Weather: Clear
3. Stack Height (ft): 10 ft.
4. Stack Area (ft): 0.196 ft.
5. Meter H@: 1.83
6. Pitot Correction Factor: 0.84
7. Nomograph C_f : 0.89
8. Probe Heater Setting: AMBIENT
9. Filter Box Temperature (F): AMBIENT
10. Last Impinger Temperature (F): < 65
11. Sample Time/Point: 4 min.
12. Points/Traverse: 16 Total
13. Probe Length: 6 ft.
14. Nozzle Diameter: 0.246
15. V : 38.221
16. Pbar: 29.92
17. Pavg: 0.36
18. $Pavg^{.5}$: 0.60
19. Havg: 1.37
20. Tsavg (F): 76
21. Tsavg (R): 536
22. TmIavg (F): 108
23. TmOavg (F): 97
24. Tmavg (F): 102
25. Tmavg (R): 562

HER-043-1

26. Pm: 29.92

27. Ps: 29.92

28. V_{lc} : 18.27 ml

3. Impinger Data

	1st	2nd	3rd	4th
Final	108	100	0	210.27
Initial	100	100	0	200
Difference	8.0	0	0	10.27
			Total difference	18.27

4. Fyrite Data

Run #1

% Carbon Dioxide = 0, 0, 0

% Oxygen = 21.9, 21.9, 21.9

$$\text{Excess Air (ea)} = (\%O_2) - 0.5\,(\%CO)/0.264\,(\%N_2) - (\%o_2) + 0.5\,(\%CO)$$

=

$$M_d - 0.44\,(\%CO_2) + 0.32\,(O_2) + 0.28\,(\%N_2 + \%CO)$$

= 28.88

$$M_s = M_d\,(1-B_{wo}) + 18(B_{wo})$$

$$M_s = 28.77$$

HER-043-1

5. Filter Data

Run #1

	Filter	H O Fraction	Acetone Fraction	Acetone Blank	Filter Blank
Final wt	0.8385		83.7542	83.4296	0.7526
Initial wt	0.7571		83.5561	83.4291	0.7524
Difference	-0.0814		0.1981	0.0005	0.0002
Corr.	-0.0002		- 0.0005		
Sample wt	0.0816		0.1976		

Total weight: 0.2792

HER-043-1

Run No. #1

1. Average Dry Gas Meter Temperature: (f)
   Have =
   Pave =

2. Dry Gas Volume:
$$Vmstd = 17.64 * Vm * Y \left(\frac{Pbar + H/13.6}{Tm}\right) = (17.64)(36.221)(1.05)\left(\frac{30.02}{562}\right)$$
$$= \boxed{37.815}$$

3. Volume of water Vapor:
$$Vwstd = 0.04707\ ft3/ml * Vlc = (0.04707)(18.27) = \boxed{0.8599}$$

4. Moisture Content:
$$Bwo = \frac{Vwstd}{Vwstd + Vmstd} = \frac{0.8599}{0.8599 + 37.815} = \boxed{0.0222}$$

5. Concentration in gr/SCF:
$$C's = (0.0154\ gr/mg)\ (Mn/Vmstd) = 0.0154 \times \frac{279.2}{37.815} = \boxed{0.1137}$$

6. Concentration in lb/ft3:
$$Cs = 2.205 \times 10\text{-}6\ (Mn/Vmstd) = 2.205 \times 10^{-6} \times \frac{279.2}{37.815}$$
$$= \boxed{(1.628)(10^{-5})}$$

7. Stack Gas Velocity:
$$Vsavg. = (85.49)(Cp)(Pavg)\left(\frac{Ts\ avg}{PsMs}\right)^{.5} = (85.49)(0.84)(0.60)\left(\frac{536}{29.92 \times 28.7}\right)^{.5}$$
$$= \boxed{33.9999}$$

8. Stack Gas Volumetric Flowrate:
$$Qs = 3600(1-Bws)(Vs)(A)\frac{Tstd}{Tsavg}\frac{Ps}{Pstd} = (3600)(0.9778)(33.9999)(0.196)(528)\left(\frac{29.}{(536)(29.92)}\right)$$
$$= \boxed{23107.6}$$

9. Pollutant Mass Emission Rate, lb/hr:
$$PMRc = (Qs)\ (Cs) = 23107.6 \times 1.628 \times 10^{-5} = \boxed{0.3762}$$

10. Percent Isokinetic:
$$I = (0.09450)\frac{Ts\ Vmstd}{PsVsAn\ 0\ (1-Bws)} = \frac{0.0945 \times 536 \times 37.815}{(29.92)(33.9999)(0.0003299)(64)(0.9778)}$$
$$I = \boxed{91.20}$$

HER-043-2

Plant Hercules, Inc.
Location Hattiesburg,
Operator DJM/JMW/BM
Date May 20, 1988
Run no. #002
Sample box no 002

Meter box no 001
Meter H@ 1.83
C factor 0.89
Pilot tube coefficient, Cp 0.84

Ambient temperature 85 F
Barometric pressure 29.92
Assumed moisture, % 15%
Probe length, (ft) 6
Nozzle identification no .246
Average calibrated nozzle diameter, cm (in) .246 in
Probe heater setting 0
Leak rate m'/min, (cfm) (0.01
Probe liner material SS
Static pressure, mm. Hg (in. Hg) 29.9
Filter No. May 4

SCHEMATIC OF STACK CROSS SECTION

Start Time: 1409 hrs

End Time: 1518 hrs

T.P #	Sample time (min)	Vacuum (in. Hg)	Stack temp. (F) (Ts)	Velocity head (in) (p)	Pressure differ across orific meter	Gas sample volume (cf)	Gas Sample temp. @ dry gas meter Inlet (F)	Gas Sample temp. @ dry gas meter Outlet (F)	Filter holder temp. (F)	Temp. of gas leaving condenser or last impinger (F)
Initial						430.541				
1	4 min	1.0	74	.11	0.40	431.91	101	100	AMB	< 65
2	4 min	1.0	74	.25	0.90	433.83	101	100	AMB	< 65
3	4 min	2.0	74	.35	1.25	436.22	107	100	AMB	< 65
4	4 min	2.0	73	.37	1.32	438.54	111	101	AMB	< 65
5	4 min	3.0	71	.43	1.55	441.19	114	102	AMB	< 65
6	4 min	3.5	72	.48	1.72	443.96	118	103	AMB	< 65
7	4 min	3.0	71	.36	1.30	446.61	120	104	AMB	< 65
8	4 min	3.0	72	.35	1.25	449.06	121	105	AMB	< 65
9	4 min	1.0	71	.12	0.45	450.30	114	105	AMB	< 65
10	4 min	1.5	72	.25	0.90	452.36	116	105	AMB	< 65
11	4 min	1.5	74	.30	1.05	454.72	120	107	AMB	< 65
12	4 min	2.0	73	.34	1.20	457.00	121	107	AMB	< 65
13	4 min	2.5	71	.41	1.45	459.57	125	108	AMB	< 65
14	4 min	3.0	71	.43	1.55	462.21	126	108	AMB	< 65
15	4 min	3.0	72	.48	1.72	464.91	128	109	AMB	< 65
16	4 min	3.0	72	.31	1.10	467.428	130	110	AMB	< 65
17										
18										
19										
20										
21										
22										
23										
24										
T.					19.11	36.887			AMB	< 65
Avg.			72	0.33	1.19		117	105		
			532 R				571 R			

HER-043-2

BONNER ANALYTICAL TESTING COMPANY
RT. 13, BOX 85
HATTIESBURG, MS. 39401
(601)264-2854

NOMOGRAPH DATA

PLANT Hercules, Inc.

DATE 5/20/88

SAMPLING LOCATION 043

RUN #2

CALIBRATED PRESSURE DIFFERENTIAL ACROSS ORIFICE, in. H_2O	H @	1.83
AVERAGE METER TEMPERATURE (80 + 25 F) F	T_m avg.	110 F
PERCENT MOISTURE IN GAS STREAM BY VOLUME	B_{wo}	15
BAROMETRIC PRESSURE AT METER, in. Hg	P_m	29.92
STATIC PRESSURE IN STACK, in. Hg (P_m 29.89 + +0.073 x STACK GUAGE PRESSURE in in. H_2O (.073)(.11) 2	P_s	29.92
RATIO OF STATIC PRESSURE TO METER PRESSURE	P_s / P_m	1.00
AVERAGE STACK TEMPERATURE, F	T_s avg.	72
AVERAGE VELOCITY HEAD, in. H_2O	p avg.	.33
MAXIMUM VELOCITY HEAD, in. H_2O	p avg.	.48
C FACTOR	.89	
CALCULATED NOZZLE DIAMRTER, in.	.277	
ACTUAL NOZZLE DIAMETER, in.	.246	
REFERENCE p, in. H_2O	.52	

HER-043-2

1. Summary of Field Data

Run #2

1. Ambient Temperature (F): 85 F
2. Weather: Clear
3. Stack Height (ft): 10 ft.
4. Stack Area (ft^2): 0.196 ft.
5. Meter H@: 1.83
6. Pitot Correction Factor: 0.84
7. Nomograph C_f : 0.89
8. Probe Heater Setting: 0
9. Filter Box Temperature (F): AMBIENT
10. Last Impinger Temperature (F): (65
11. Sample Time/Point: 4 min.
12. Points/Traverse: 16 Total
13. Probe Length: 6 ft,
14. Nozzle Diameter: 0.246
15. V : 36.887
16. Pbar: 29.92
17. Pavg: 0.33
18. $Pavg^{.5}$: 0.574
19. Havg: 1.19
20. Tsavg (F): 72
21. Tsavg (R): 532
22. TmIavg (F): 117
23. TmOavg (F): 105
24. Tmavg (F): 111
25. Tmavg (R): 571

HER-043-2

26. Pm: 29.92

27. Ps: 29.92

28. V_{lc} : 24.80 ml

3. Impinger Data

	1st	2nd	3rd	4th
Final	112	103	1	208.80
Initial	100	100	0	200
Difference	12.0	3	1	8.80
			Total difference	24.80

4. Fyrite Data

Run #1

% Carbon Dioxide = 0, 0, 0

% Oxygen = 21.9, 21.9, 21.8

Excess Air (ea) = $(\%O_2) - 0.5\,(\%CO)/0.264\,(\%N_2) - (\%o_2) + 0.5\,(\%CO)$

=

$M_d - 0.44\,(\%CO_2) + 0.32\,(O_2) + 0.28\,(\%N_2 + \%CO)$

= 28.88

$M_s = M_d\,(1-B_{wo}) + 18(B_{wo})$

M_s = 28.77

HER-043-2

5. Filter Data

Run #2

	Filter	H O Fraction	Acetone Fraction	Acetone Blank	Filter Blank
Final wt	0.9811		83.1694	83.4296	0.7526
Initial wt	0.7544		83.0986	83.4291	0.7524
Difference	0.2267		0.0708	0.0005	0.0002
Corr.	-0.0002		- 0.0005		
Sample wt	0.2265		0.0703		

Total weight 0.2968

HER-043-2

Run No. __#2___

1. Average Dry Gas Meter Temperature: (f)
   Have =
   Pave =

2. Dry Gas Volume:
$$Vmstd = 17.64 * Vm * Y \left(\frac{Pbar + H/13.6}{Tm}\right) = (17.64)(36.887)(1.05)\left(\frac{30.01}{571}\right)$$
$$= \boxed{37.908}$$

3. Volume of water Vapor:
$$Vwstd = 0,04707\ ft3/ml * Vlc = (0.04707)(24.80) = \boxed{1.167}$$

4. Moisture Content:
$$Bwo = \frac{Vwstd}{Vwstd + Vmstd} = \frac{1.167}{1.167 + 35.908} = \boxed{0.0315}$$

5. Concentration in gr/SCF:
$$C's = (0.0154\ gr/mg)(Mn/Vmstd) = 0.0154 \times \frac{296.8}{35.908} = \boxed{0.1273}$$

6. Concentration in lb/ft3:
$$Cs = 2.205 \times 10\text{-}6\ (Mn/Vmstd) = 2.205 \times 10^{-6} \times \frac{296.8}{35.908}$$
$$= \boxed{(1.8226)(10^{-5})}$$

7. Stack Gas Velocity:
$$Vsavg. = (85.49)(Cp)(Pavg)\left(\frac{Ts\ avg}{PsMs}\right)^{.5} = (85.49)(0.84)(0.574)\left(\frac{532}{29.92 \times 28.}\right)^{.5}$$
$$= \boxed{32.4050}$$

8. Stack Gas Volumetric Flowrate:
$$Qs = 3600(1-Bws)(Vs)(A)\frac{Tstd}{Tsavg}\frac{Ps}{Pstd} = (3600)(0.9686)(32.4050)(0.196)(528)(29.\ \frac{}{(532)(29.92)}$$
$$= \boxed{21980.5}$$

9. Pollutant Mass Emission Rate, lb/hr:
$$PMRc = (Qs)(Cs) = 21980.5 \times 1.8226 \times 10^{-5} = \boxed{0.4006}$$

10. Percent Isokinetic:
$$I = (0.09450)\frac{Ts\ Vmstd}{PsVsAn\ 0\ (1-Bws)} = \frac{(0.09450)(532)(35.908)}{(29.92)(32.4050)(0.0003299)\underline{(64)}(0.9686)}$$
$$I = \boxed{91.04}$$

HER-043-3

Plant Hercules, Inc.
Location Hattiesburg,
Operator DJM/JMW/BM
Date May 20, 1988
Run no. #3
Sample box no 001

Meter box no 001
Meter H@ 1.83
C factor 0.89
Pilot tube coefficient, Cp 0.84

Ambient temperature 85 F
Barometric pressure 29.92
Assumed moisture, % 15%
Probe length, (ft) 6
Nozzle identification no .246
Average calibrated nozzle diameter, cm (in) .246 in
Probe heater setting 60
Leak rate m'/min, (cfm) 0.015
Probe liner material SS
Static pressure, mm. Hg (in. Hg) 29.9
Filter No. May 5

SCHEMATIC OF STACK CROSS SECTION

Start Time: 1528 hrs

End Time: 1635 hrs

T.P #	Sample time (min)	Vacuum (in. Hg)	Stack temp. (F) (Ts)	Velocity head (in) (p)	Pressure differ across orific meter	Gas sample volume (cf)	Gas Sample temp. @ dry gas meter Inlet (F)	Gas Sample temp. @ dry gas meter Outlet (F)	Filter holder temp. (F)	Temp. of gas leaving condenser or last impinger (F)
Initial						467.641				
1	4 min	1.0	73	.14	0.50	469.15	111	108	AMB	< 65
2	4 min	1.0	74	.29	1.00	471.35	112	108	AMB	< 65
3	4 min	2.0	75	.32	1.15	473.63	118	109	AMB	< 65
4	4 min	2.0	75	.32	1.15	476.01	122	110	AMB	< 65
5	4 min	2.0	77	.28	0.98	478.32	123	110	AMB	< 65
6	4 min	2.0	73	.34	1.20	480.71	122	110	AMB	< 65
7	4 min	2.0	74	.30	1.05	483.15	121	109	AMB	< 65
8	4 min	2.0	76	.28	0.98	485.40	120	109	AMB	< 65
9	4 min	1.0	75	.19	0.70	487.29	113	107	AMB	< 65
10	4 min	1.0	75	.18	0.65	489.15	111	106	AMB	< 65
11	4 min	2.0	76	.36	1.30	491.49	112	105	AMB	< 65
12	4 min	3.5	75	.55	2.00	494.37	118	106	AMB	< 65
13	4 min	4.5	74	.75	2.60	497.74	124	106	AMB	< 65
14	4 min	5.5	75	.76	2.65	501.12	132	108	AMB	< 65
15	4 min	5.5	74	.68	2.40	504.50	136	109	AMB	< 65
16	4 min	5.5	75	.68	2.40	507.839	134	110	AMB	< 65
17										
18										
19										
20										
21										
22										
23										
24										
T.				6.42		40.198	1929	1730	AMB	< 65
Avg.			75	0.40	1.42		121	108	AMB	< 65
			535 R				575 R			

BONNER ANALYTICAL TESTING COMPANY
RT. 13, BOX 85
HATTIESBURG, MS. 39401
(601)264-2854

NOMOGRAPH DATA

PLANT Hercules, Inc.

DATE 5/20/88

SAMPLING LOCATION 043

RUN #3

CALIBRATED PRESSURE DIFFERENTIAL ACROSS ORIFICE, in. H_2O	H @	1.83
AVERAGE METER TEMPERATURE (80 + 25 F) F	T_m avg.	110 F
PERCENT MOISTURE IN GAS STREAM BY VOLUME	B wo	15
BAROMETRIC PRESSURE AT METER, in. Hg	P_m	29.92
STATIC PRESSURE IN STACK, in. Hg (P_m 29.89 + +0.073 x STACK GUAGE PRESSURE in in. H_2O (.073)(.11) 2	P_s	29.92
RATIO OF STATIC PRESSURE TO METER PRESSURE	$s\ P_m$	1.00
AVERAGE STACK TEMPERATURE, F	T_s avg.	75
AVERAGE VELOCITY HEAD, in. H_2O 2	p avg.	.40
MAXIMUM VELOCITY HEAD, in. H_2O 2	p avg.	.76
C FACTOR	.89	
CALCULATED NOZZLE DIAMRTER, in.	.277	
ACTUAL NOZZLE DIAMETER, in.	.246	
REFERENCE p, in. H_2O 2	.52	

HER-043-3

1. Summary of Field Data

Run #3

1. Ambient Temperature (F): 85 F
2. Weather: Clear
3. Stack Height (ft): 10 ft.
4. Stack Area (ft): 0.196 ft.
5. Meter H@: 1.83
6. Pitot Correction Factor: 0.84
7. Nomograph C_f : 0.89
8. Probe Heater Setting: 0
9. Filter Box Temperature (F): AMBIENT
10. Last Impinger Temperature (F): < 65
11. Sample Time/Point: 4 min.
12. Points/Traverse: 16 Total
13. Probe Length: 6 ft.
14. Nozzle Diameter: 0.245
15. V : 40.198
16. Pbar: 29.92
17. Pavg: 0.40
18. $Pavg^{.5}$: 0.63
19. Havg: 1.42
20. Tsavg (F): 75
21. Tsavg (R): 535
22. TmIavg (F): 121
23. TmOavg (F): 108
24. Tmavg (F): 115
25. Tmavg (R): 575

HER-043-3

26. Pm: 29.92

27. Ps: 29.92

28. V_{lc} : 28.89 ml

3. Impinger Data

	1st	2nd	3rd	4th
Final	114	105	0	209.89
Initial	100	100	0	200.00
Difference	14.0	5	0	9.89
			Total difference	28.89

4. Fyrite Data

Run #3

% Carbon Dioxide = 0, 0, 0

% Oxygen = 21.9, 21.9, 21.8

Excess Air (ea) = $(\%O_2) - 0.5\,(\%CO)/0.264\,(\%N_2) - (\%O_2) + 0.5\,(\%CO)$

=

$M_d - 0.44\,(\%CO) + 0.32\,(O) + 0.28\,(\%N + \%CO)$

= 28.88

$M_s = M_d (1-B_{wo}) + 18(B_{wo})$

M_s = 28.77

HER-043-3

5. Filter Data

Run #3

	Filter	H O Fraction	Acetone Fraction	Acetone Blank	Filter Blank
Final wt	0.9084		82.4566	83.4296	0.7526
Initial wt	0.7524		82.2658	83.4291	0.7524
Difference	0.1560		0.1908	0.0005	0.0002
Corr.	-0.0002		- 0.0005		
Sample wt	0.1558		0.1903		
Total weight			0.3461		

HER-043-3

Run No. #3

1. Average Dry Gas Meter Temperature: (f)
   Have =
   Pave =

2. Dry Gas Volume:

$$Vmstd = 17.64 * Vm * Y \left(\frac{Pbar + H/13.6}{Tm}\right) = (17.64)(40.198)(1.05)\left(\frac{30.02}{575}\right)$$

$$= \boxed{38.877}$$

3. Volume of water Vapor:

$$Vwstd = 0.04707\ ft3/ml * Vlc = (0.04707)(28.89) = \boxed{1.3598}$$

4. Moisture Content:

$$Bwo = \frac{Vwstd}{Vwstd + Vmstd} = \frac{1.3598}{1.3598 + 38.877} = \boxed{0.0338}$$

5. Concentration in gr/SCF:

$$C's = (0.0154\ gr/mg)\ (Mn/Vmstd) = 0.0154 \times \frac{346.1}{38.877} = \boxed{0.1371}$$

6. Concentration in lb/ft3:

$$Cs = 2.205 \times 10\text{-}6\ (Mn/Vmstd) = 2.205 \times 10^{-6} \times \frac{346.1}{38.877}$$

$$= \boxed{(1.963)(10^{-5})}$$

7. Stack Gas Velocity:

$$Vsavg. = (85.49)(Cp)(Pavg)^{.5}\left(\frac{Ts\ avg}{PsMs}\right)^{.5} = (85.49)(0.84)(0.63)\left(\frac{535}{29.92 \times 28.77}\right)^{.5}$$

$$= \boxed{35.6665}$$

8. Stack Gas Volumetric Flowrate:

$$Qs = 3600(1-Bws)(Vs)(A)\frac{Tstd}{Tsavg}\frac{Ps}{Pstd} = (3600)(0.9662)(35.6665)(0.196)(528)\left(\frac{29.92}{(535)(29.92)}\right)$$

$$= \boxed{23997.5}$$

9. Pollutant Mass Emission Rate, lb/hr:

$$PMRc = (Qs)\ (Cs) = 23997.5 \times 1.963 \times 10^{-5} = \boxed{0.471}$$

10. Percent Isokinetic:

$$I = (0.09450)\frac{Ts\ Vmstd}{PsVsAn\ 0\ (1-Bws)} = \frac{(0.0945)(535)(38.877)}{(29.92)(35.6665)(0.0003299)(64)(0.9662)}$$

$$I = \boxed{90.28}$$

Plant: Hercules Inc -043
Location: Hattiesburg
Operator: DM/JW/BM
Date: 20 May 88
Run no. # 1
Sample box no 001

Meter box no 001
Meter HQ 1.83
C factor .89
Pilot tube coefficient, Cp 0.84

Ambient temperature 85
Barometric pressure 29.92
Assumed moisture, % 15%
Probe length, (ft) 6
Nozzle identification no .246
Average calibrated nozzle diameter, cm (in) .246
Probe heater setting 600
Leak rate m³/min, (cfm) < 0.01
Probe liner material SS
Static pressure, mm. Hg (in. Hg) 29.916
Filter No. MA46

SCHEMATIC OF STACK CROSS SECTION

Start Time: 1231 hrs

End Time: 1358 hrs

T.P #	Sample time (min)	Vacuum (in. Hg)	Stack temp. (F) (Ts)	Velocity head (in) (p)	Pressure differ across orific meter	Gas sample volume (cf)	Gas Sample temp. @ dry gas meter Inlet (F)	Gas Sample temp. @ dry gas meter Outlet (F)	Filter holder temp. (F)	Temp. of gas leaving condenser or last impinger (F)
Initial						392.272				
1	4min	2.0	77	.27	.96	394.42	94	91	Ambient	<65
2	4 min	2.5	76	.32	1.15	396.57	97	92	Ambient	<65
3	4 min	3.0	76	.34	1.20	398.85	102	93	Ambient	<65
4	4 min	3.0	77	.35	1.25	401.24	104	93	Ambient	<65
5	4 min	3.0	76	.37	1.32	403.67	107	94	Ambient	<65
6	4 min	4.0	75	.44	1.60	406.38	110	95	Ambient	<65
7	4 min	4.0	77	.46	1.65	409.15	112	96	Ambient	<65
8	4 min	4.0	77	.49	1.70	411.86	116	98	Ambient	<65
9	4 min	1.0	76	.13	.47	413.21	99	99	Ambient	<65
10	4 min	1.0	75	.31	1.10	415.29	101	99	Ambient	<65
11	4 min	2.5	74	.34	1.20	417.68	104	99	Ambient	<65
12	4 min	3.0	75	.38	1.35	420.21	108	99	Ambient	<65
13	4 min	3.5	76	.42	1.50	422.82	113	99	Ambient	<65
14	4min	3.5	76	.42	1.50	425.41	116	100	Ambient	<65
15	4min	3.5	74	.39	1.40	428.01	114	101	Ambient	<65
→ 16	4 min	3.5	74	.35	1.25	430.493	119	102	Ambient	<65
17										
18										
19										
20										
21										
22										
23										
24										
24										
T.	64			5.76	2.06		1720		Ambient	<65
Avg			76	0.36	1.37	38.221	108	97		

536R

102
562R

BONNER ANALYTICAL TESTING COMPANY
RT. 13, BOX 85
HATTIESBURG, MS. 39401
(601)264-2854

NOMOGRAPH DATA

PLANT Hercules, Inc

DATE 20 May 88

SAMPLING LOCATION 043

Run #1

CALIBRATED PRESSURE DIFFERENTIAL ACROSS ORIFICE, in. H O	$H_@$	1.83
AVERAGE METER TEMPERATURE (AMBIENT + 25 F), F 80	$T_{m\ avg.}$	105
PERCENT MOISTURE IN GAS STREAM BY VOLUME	B_{wo}	15
BAROMETRIC PRESSURE AT METER, in. Hg	P_m	29.92
STATIC PRESSURE IN STACK, in. Hg (P_m ±0.073 x STACK GUAGE PRESSURE in in. H O) 29.92 + (0.073)(-0.05)	P_s	29.916
RATIO OF STATIC PRESSURE TO METER PRESSURE	P_s / P_m	1.00
AVERAGE STACK TEMPERATURE, F	$T_{s\ avg.}$	72
AVERAGE VELOCITY HEAD, in. H O	$P_{avg.}$	.325
MAXIMUM VELOCITY HEAD, in. H O	$P_{avg.}$	.45
C FACTOR		.89
CALCULATED NOZZLE DIAMETER, in.		.277
ACTUAL NOZZLE DIAMETER, in.		.246
REFERENCE P_1, in. H O		.52

HBR -043

1. Summary of Field Data

Run

1. Ambient Temperature (F): 85
2. Weather: Clear
3. Stack Height (ft): 10Ft
4. Stack Area (ft): 0.196
5. Meter H@: 1.83
6. Pitot Correction Factor: 0.84
7. Nomograph C_f : 0.89
8. Probe Heater Setting: Ambient
9. Filter Box Temperature (F): Ambient
10. Last Impinger Temperature (F): 68
11. Sample Time/Point: 4
12. Points/Traverse: 16 Total
13. Probe Length: 6ft
14. Nozzle Diameter: 0.246
15. V_m: 38.221
16. Pbar: 29.92
17. Pavg: 0.36
18. $Pavg^5$: 0.60
19. Havg: 1.37
20. Tsavg (F): 76
21. Tsavg (R): 536
22. TmIavg (F): 108
23. TmOavg (F): 97
24. Tmavg (F): 102
25. Tmavg (R): 562

HERC Run 1
5/20/88
Loc 043

26. P_m: 29.92

27. P_s: 29.92

28. V_{lc}: 18.27

3. Impinger Data

Final	108	100	6	210.27
Initial	100	100	0	200.00
Difference	8.0	0	0	~~10.27~~ 8.27
			Total difference	18.27

6K wrsB

4. Fyrite Data

Run

% Carbon Dioxide = 0, 0, 0

% Oxygen = 21.9, 21.9, 21.9

% ~~Carbon Monoxide~~ =

Excess Air (ea) = $(\%O_2) - 0.5\,(\%CO)/0.264\,(\%N_2) - (\%O_2) + 0.5\,(\%CO)$

=

$M_d = 0.44\,(\%CO_2) + 0.32\,(O_2) + 0.28\,(\%N_2 + \%CO)$

= 28.88

$M_s = M_d\,(1-B_{wo}) + 18(B_{wo})$

= 28.77

Run #1

5. Filter Data

Run

	Filter	H O Fraction	Acetone Fraction	Acetone Blank	Filter Blank
Final wt	0.8385	NA	83.7542	83.4296	0.7526
Initial wt	0.7571		83.5561	83.4291	0.7524
Difference	0.0814		0.1981	0.0005	0.0002
Corr.	0.0002		-0.0005		
Sample wt	0.0816		0.1976		
Total weight		0.2792			

Run No. _____

1. Average Dry Gas Meter Temperature:
   Average Orifice Pressure Drop:
   Average $H@$:

2. Dry Gas Volume:

$$Vmstd = 17.64 * Vm * Y \left(\frac{Pbar + \Delta H/13.6}{Tm}\right) = (17.64)(38.221)(1.05)\left(\frac{30.02}{562}\right)$$

$= 37.815$

3. Volume of water vapor:
   $Vwstd = 0.04707\ ft3/ml * Vlc = 0.04707 * 18.27$
   $= 0.8599$

4. Moisture Content:

$$Bwo = \frac{Vwstd}{Vwstd + Vmstd} \quad \frac{0.8599}{0.8599 + 37.815}$$

$= 0.0222$

5. Concentration in gr/SCF:
   $Cs = (0.0154\ gr/mg)(Mn/Vmstd) = 0.0154 * \frac{279.2}{37.815}$
   $= 0.1137$

6. Concentration in lb/ft3:
   $Cs = 2.205 * 10^{-6} (Mn/Vmstd) = 2.205 * 10^{-6} * \frac{279.2}{37.815}$
   $= 1.628 * 10^{-5}$

7. Stack Gas Velocity:

$$Vsavg. = (85.49)(Cp)(Pavg)\left(\frac{Ts\ avg}{PsMs}\right)^{.5} = (85.49)(.84)(0.60)\left(\frac{(536)}{(29.92)(28.77)}\right)^{.5}$$

$= 33.9999$

8. Stack Gas Volumetric Flowrate:

$$Qs = 3600\ (1-Bws)\ (Vs)\ (A)\left(\frac{Tstd}{Tsavg}\right)\left(\frac{Ps}{Pstd}\right) = \frac{(3600)(0.9778)(33.9999)(0.196)(528)(29.92)}{(536)(29.92)}$$

$= 23107.6$

9. Pollutant Mass Emission Rate, lb/hr:
   $PMRc = (Qs)(Cs) = 23107.6 * 1.628 * 10^{-5}$
   $= 0.3762$

10. Percent Isokinetic:

$$I = (0.09450)\frac{Ts\ Vmstd}{PsVsAn\ \theta\ (1-Bws)} = \frac{(0.0945)(536)(37.815)}{(29.92)(33.9999)(0.0003299)(64)(0.9778)}$$

$= 91.20$

Plant: Hercules Inc -043
Location: Hattiesburg
Operator: DM/JW/BM
Date: 20 May 88
Run no.: #2
Sample box no: 002

Meter box no: 001
Meter H@: 1.83
C factor: 0.89
Pilot tube coefficient, Cp: 0.84

Ambient temperature: 85
Barometric pressure: 29.92
Assumed moisture, %: 5%
Probe length, (ft): 6
Nozzle identification no: 0.246
Average calibrated nozzle diameter, cm (in): 0.246
Probe heater setting: 300
Leak rate m³/min, (cfm): <0.01
Probe liner material: SS
Static pressure, mm. Hg (in. Hg): 29.92
Filter No.: MA44

SCHEMATIC OF STACK CROSS SECTION

Start Time: 1409 hrs

End Time: 1518 hrs

T.A #	Sample time (min)	Vacuum (in. Hg)	Stack temp. (F) (Ts)	Velocity head (in) (p)	Pressure differ across orific meter	Gas sample volume (cf)	Gas Sample temp. @ dry gas meter Inlet (F)	Gas Sample temp. @ dry gas meter Outlet (F)	Filter holder temp. (F)	Temp. of gas leaving condenser or last impinger (F)
Initial						430.541				
1	4 min	1.0	74	.11	.40	431.91	101	100	Ambient	<65
2	4 min	1.0	74	.25	.90	433.83	101	100	Ambient	<65
3	4 min	2.0	74	.35	1.25	436.22	107	100	Ambient	<65
4	4 min	2.0	73	.37	1.32	438.54	111	101	Ambient	<65
5	4 min	3.0	71	.43	1.55	441.19	114	102	Ambient	<65
6	4 min	3.5	72	.48	1.72	443.96	118	103	Ambient	<65
7	4 min	3.0	74	.36	1.30	446.61	120	104	Ambient	<65
8	4 min	3.0	72	.35	1.25	449.06	121	105	Ambient	<65
9	4 min	1.0	71	.12	.45	450.30	114	105	Ambient	<65
10	4 min	1.5	72	.25	.90	452.36	116	105	Ambient	<65
11	4 min	1.5	74	.30	1.05	454.72	120	107	Ambient	<65
12	4 min	2.0	73	.34	1.20	457.00	121	107	Ambient	<65
13	4 min	2.5	71	.41	1.45	459.57	125	108	Ambient	<65
14	4 min	3.0	71	.43	1.55	462.21	126	108	Ambient	<65
15	4 min	3.0	72	.48	1.72	464.91	128	109	Ambient	<65
→ 16	4 min	3.0	72	.31	1.10	467.428	130	110	Ambient	<65
17										
18										
19										
20										
21										
22										
23										
24										
24										
T.	64				19.11	36.887				
Avg			72	0.33	1.19		117	105	Ambient	<65

532R

111
571R

BONNER ANALYTICAL TESTING COMPANY
RT. 13, BOX 85
HATTIESBURG, MS. 39401
(601)264-2854

NOMOGRAPH DATA

PLANT Hercules, Inc

DATE 20 May 88

SAMPLING LOCATION 043
Run #2

CALIBRATED PRESSURE DIFFERENTIAL ACROSS ORIFICE, in. H 2O	H @	1.83
AVERAGE METER TEMPERATURE (AMBIENT + 25 F), F	T m avg.	110
PERCENT MOISTURE IN GAS STREAM BY VOLUME	B wo	15%
BAROMETRIC PRESSURE AT METER, in. Hg	P m	29.92
STATIC PRESSURE IN STACK, in. Hg (P m ±0.073 x STACK GUAGE PRESSURE in in. H 2O	P s	29.92
RATIO OF STATIC PRESSURE TO METER PRESSURE	s P m	1.0
AVERAGE STACK TEMPERATURE, F	T s avg.	72
AVERAGE VELOCITY HEAD, in. H 2O	P avg.	0.33
MAXIMUM VELOCITY HEAD, in. H 2O	P avg.	0.48
A FACTOR		0.89
CALCULATED NOZZLE DIAMRTER, in.		0.222
ACTUAL NOZZLE DIAMETER, in.		0.246
REFERENCE P, in. H 2O		0.52

1. Summary of Field Data

Run 2 AERC-043

1. Ambient Temperature (F): 85
2. Weather: Clear
3. Stack Height (ft): 10
4. Stack Area (ft): 0.196
5. Meter H@: 1.83
6. Pitot Correction Factor: 0.84
7. Nomograph C_f : 0.89
8. Probe Heater Setting: 0
9. Filter Box Temperature (F): Ambient
10. Last Impinger Temperature (F): <65
11. Sample Time/Point: 4
12. Points/Traverse: 16 Total
13. Probe Length: 6 ft
14. Nozzle Diameter: 0.246
15. V_m: 36.887
16. Pbar: 29.92
17. Pavg: 0.33
18. $Pavg^5$: 0.574
19. Havg: 1.19
20. Tsavg (F): 72
21. Tsavg (R): 532
22. TmIavg (F): 117
23. TmOavg (F): 105
24. Tmavg (F): 111
25. Tmavg (R): 571

MERL Run 2
5/20/88
-043

26. Pm: 29.92

27. Pg: 29.92

28. V : 24.80

3. Impinger Data

Final	112	103	1	208.80
Initial	100	100	0	200.00
Difference	12	3	1	8.80
			Total difference	24.80

4. Fyrite Data

Run

% Carbon Dioxide = 0, 0, 0.

% Oxygen = 21.9, 21.9, 21.8

% Carbon Monoxide =

$$\text{Excess Air (ea)} = \frac{(\%O_2) - 0.5(\%CO)}{0.264(\%N_2) - (\%O_2) + 0.5(\%CO)} =$$

$$M_d = \frac{-0.44(\%CO_2) + 0.32(O_2) + 0.28(\%N_2 + \%CO)}{} = 28.88$$

$$M_s = M_d(1-B_{wo}) + 18(B_{wo})$$

$$= 28.77$$

5. Filter Data

Run #2 -043

	Filter	H O Fraction	Acetone Fraction	Acetone Blank	Filter Blank
Final wt	0.9811		83.1694	83.4296	0.7526
Initial wt	0.7544		83.0986	83.4291	0.7524
Difference	0.2267		~~0.0708~~ ~~0.1908~~	0.0005	0.0002
Corr.	-0.0002	-	0.0005	~~0.~~	~~0.0002~~
Sample wt	0.2265		0.0703		

Total weight 0.2968

Run #2

Run No. ~~HAR~~-043

1. Average Dry Gas Meter Temperature:
   Average Orifice Pressure Drop:
   Average Hθ:

2. Dry Gas Volume:

$$Vmstd = 17.64 * Vm * Y \left(\frac{Pbar + \Delta H/13.6}{Tm}\right) \quad (17.64)(36.887)(1.05)\left(\frac{30.01}{571}\right)$$

$= 35.908$

3. Volume of water Vapor:
   $Vwstd = 0.04707\ ft^3/ml * Vlc = 0.04707 * 24.80$

$= 1.167$

4. Moisture Content:

$$Bwo = \frac{Vwstd}{Vwstd + Vmstd} \qquad \frac{1.167}{1.167 + 35.908}$$

$= 0.0315$

5. Concentration in gr/SCF:
   $Cs = (0.0154\ gr/mg)(Mn/Vmstd) = 0.0154 * \frac{296.8}{35.908}$

0.1273

6. Concentration in lb/ft3:
   $Cs = 2.205 \times 10^{-6} (Mn/Vmstd) = 2.205 * 10^{-6} * \frac{296.8}{35.908}$

$1.8226 * 10^{-5}$

7. Stack Gas Velocity:

$$Vsavg. = (85.49)(Cp)(Pavg)\left(\frac{Ts\ avg}{PsMs}\right)^{.5} = (85.49)(0.84)(0.574)\left(\frac{532}{(29.92)(28.7)}\right)^{.5}$$

(28.7 ←)

$= 32.4050$

8. Stack Gas Volumetric Flowrate:

$$Qs = 3600\ (1-Bws)\ (Vs)\ (A)\ \frac{Tstd}{Tsavg}\ \frac{Ps}{Pstd} = \frac{(3600)(0.9686)(32.4050)(0.196)(528)(29}{(532)(29.92)}$$

21980.5

9. Pollutant Mass Emission Rate, lb/hr:
   $PMRc = (Qs)(Cs) = 21980.5 * 1.8226 * 10^{-5}$

$= 0.4006$

10. Percent Isokinetic:

$$I = (0.09450)\ \frac{Ts\ Vmstd}{PsVsAn\ \theta\ (1-Bws)} = \frac{(0.09450)(532)(35.908)}{(29.92)(32.4050)(0.0003299)(64)(0.9686)}$$

$= 91.04$

Plant Hercules Inc. -043
Location Hattiesburg
Operator DM/JW/BM
Date 20 May 88
Run no. # 3
Sample box no 001

Meter box no 001
Meter H@ 1.83
C factor 0.89
Pilot tube coefficient, Cp 0.84

Ambient temperature 85
Barometric pressure 29.92
Assumed moisture, % 15%
Probe length, (ft) 6
Nozzle identification no 0.246
Average calibrated nozzle diameter, cm (in) 0.246
Probe heater setting 60
Leak rate m³/min, (cfm) K @ 0.015
Probe liner material SS
Static pressure, mm. Hg (in. Hg) 29.92
Filter No. MA 45

SCHEMATIC OF STACK CROSS SECTION

Start Time: 1528 hrs

End Time: 1635 hrs

T.R #	Sample time (min)	Vacuum (in. Hg)	Stack temp. (F) (Ts)	Velocity head (in) (p)	Pressure differ across orific meter	Gas sample volume (cf)	Gas Sample temp. @ dry gas meter Inlet (F)	Gas Sample temp. @ dry gas meter Outlet (F)	Filter holder temp. (F)	Temp. of gas leaving condenser or last impinger (F)
Initial						467.641				
1	4 min	1.0	73	.14	.50	469.15	111	108	Ambient	<65
2	4 min	1.0	74	.29	1.00	471.35	112	108	Ambient	<65
3	4 min	2.0	75	.32	1.15	473.63	118	109	Ambient	<65
4	4 min	2.0	75	.32	1.15	476.01	122	110	Ambient	<65
5	4 min	2.0	77	.28	.98	478.32	123	110	Ambient	<65
6	4 min	2.0	73	.34	1.20	480.71	122	110	Ambient	<65
7	4 min	2.0	74	.30	1.05	483.15	121	109	Ambient	<65
8	4 min	2.0	76	.28	.98	485.40	120	109	Ambient	<65
9	4 min	1.0	75	.19	.70	487.29	113	107	Ambient	<65
10	4 min	1.0	75	.18	.65	489.15	111	106	Ambient	<65
11	4 min	2.0	76	.36	1.30	491.49	112	105	Ambient	<65
12	4 min	3.5	75	.55	2.0	494.37	118	106	Ambient	<65
13	4 min	4.5	74	.75	2.6	497.74	124	106	Ambient	<65
14	4 min	5.5	75	.76	2.65	501.12	132	108	Ambient	<65
15	4 min	5.5	74	.68	2.4	504.50	136	109	Ambient	<65
→ 16	4 min	5.5	75	.68	2.4	507.839	134	110	Ambient	<65
17										
18										
19										
20										
21										
22										
23										
24										
24										
T.	64			6.42		40.198	1929	1730		
Avg			75	0.40	1.42		~~120~~ 121	108	Ambient	<65

535R

115

~~580R~~ 575R

BONNER ANALYTICAL TESTING COMPANY
RT. 13, BOX 85
HATTIESBURG, MS. 39401
(601)264-2854

NOMOGRAPH DATA

PLANT Hercules, Inc -043

DATE 20 May 88

SAMPLING LOCATION Run #3 - 043

CALIBRATED PRESSURE DIFFERENTIAL ACROSS ORIFICE, in. H 2 O	$H_@$	1.83
AVERAGE METER TEMPERATURE (AMBIENT + ~~25~~ f), F	$T_{m\ avg.}$	110
PERCENT MOISTURE IN GAS STREAM BY VOLUME	B_{wo}	15%
BAROMETRIC PRESSURE AT METER, in. Hg	P_m	29.92
STATIC PRESSURE IN STACK, in. Hg (P_m +0.073 x STACK GUAGE PRESSURE in in. H 2 O)	P_s	29.92
RATIO OF STATIC PRESSURE TO METER PRESSURE	$s\ P_m$	1.0
AVERAGE STACK TEMPERATURE, F	$T_{s\ avg.}$	75
AVERAGE VELOCITY HEAD, in. H 2 O	$P_{avg.}$	0.40
MAXIMUM VELOCITY HEAD, in. H 2 O	$P_{avg.}$	0.76
C FACTOR		0.89
CALCULATED NOZZLE DIAMRTER, in.		0.277
ACTUAL NOZZLE DIAMETER, in.		0.246
REFERENCE P_s in. H 2 O		0.52

Hell Flaker #3 -043

1. Summary of Field Data

Run

1. Ambient Temperature (F): 85
2. Weather: Clear
3. Stack Height (ft): 10 ft
4. Stack Area (ft): .196
5. Meter H@: 1.83
6. Pitot Correction Factor: 0.84
7. Nomograph C_f : 0.89
8. Probe Heater Setting: ~~60~~ 0
9. Filter Box Temperature (F): Ambient
10. Last Impinger Temperature (F): <65
11. Sample Time/Point: 4
12. Points/Traverse: 16 Total
13. Probe Length: 6 ft
14. Nozzle Diameter: 0.245
15. V_m: 40.198
16. Pbar: 29.92
17. Pavg: 0.40
18. $Pavg^S$: 0.63
19. Havg: 1.42
20. Tsavg (F): 75
21. Tsavg (R): 535
22. TmIavg (F): 121
23. TmOavg (F): 108
24. Tmavg (F): 115
25. Tmavg (R): 575

HERCULES Run #3
5/20/88
Loc 043

26. P_m: 29.92

27. P_s: 29.92

28. V : 28.89

3. Impinger Data

Final	114	105	0	209.89
Initial	100	100	0	200.00
Difference	14	5	0	9.89
			Total difference	28.89

4. Fyrite Data

Run

% Carbon Dioxide = 0, 0, 0,

% Oxygen = 21.9, 21.9 21.8

% Carbon Monoxide =

Excess Air (ea) = $(\%O_2) - 0.5\,(\%CO)/0.264\,(\%N_2) - (\%o_2) + 0.5\,(\%CO)$

=

$M_d - 0.44\,(\%CO_2) + 0.32\,(O_2) + 0.28\,(\%N_2 + \%CO)$

$= 28.88$

$M_s = M_d\,(1-B_{wo}) + 18(B_{wo})$

$= 28.77$

HERL-043

5. Filter Data

Run 3.

	Filter	H O Fraction	Acetone Fraction	Acetone Blank	Filter Blank
Final wt	0.9084		82.4566	83.4296	0.7526
Initial wt	0.7524		~~82.2658~~	83.4291	0.7524
Difference	0.1560		~~0.1908~~	0.0005	0.0002
Corr.	-0.0002		~~0.0708~~ -0.0005		
Sample wt	0.1558		0.1903		

Total weight: 0.3461

MAY 5

Run No. HERC Run 3-043

1. Average Dry Gas Meter Temperature:
   Average Orifice Pressure Drop:
   Average $H_@$:

2. Dry Gas Volume:

$$V_{mstd} = 17.64 * V_m * Y \left(\frac{P_{bar} + \Delta H/13.6}{T_m}\right) = (17.64)(40.198)(1.05)\left(\frac{30.02}{575}\right)$$

$$= 38.877$$

3. Volume of water Vapor:

$$V_{wstd} = 0.04707 * V_{lc} = 0.04707 * 28.89$$

$$= 1.3598$$

4. Moisture Content:

$$B_{wo} = \frac{V_{wstd}}{V_{wstd} + V_{mstd}} = \frac{1.3598}{1.3598 + 38.877}$$

$$= 0.0338$$

5. Concentration in gr/SCF:

$$C_s = (0.0154\ gr/mg)(M_n/V_{mstd}) = 0.0154 * \frac{346.1}{38.877}$$

$$= 0.1371$$

6. Concentration in lb/ft3:

$$C_s = 2.205 * 10^{-6} (M_n/V_{mstd}) = 2.205 * 10^{-6} * \frac{346.1}{38.877}$$

$$= 1.963 * 10^{-5}$$

7. Stack Gas Velocity:

$$V_{savg} = (85.49)(C_p)(P_{avg})\left(\frac{T_{s\,avg}}{P_s M_s}\right)^{.5} = (85.49)(.84)(0.63)\left(\frac{535}{(29.92)(28.77)}\right)^{.5}$$

$$= 35.6665$$

8. Stack Gas Volumetric Flowrate:

$$Q_s = 3600\,(1-B_{ws})\,(V_s)\,(A)\,\frac{T_{std}}{T_{savg}}\,\frac{P_s}{P_{std}} = (3600)(.9662)(35.6668)(0.196)\left(\frac{528}{535}\right)\left(\frac{29.}{29.92}\right)$$

$$= 23997.5$$

9. Pollutant Mass Emission Rate, lb/hr:

$$PMR_s = (Q_s)(C_s) = 23997.5 * 1.963 * 10^{-5}$$

$$= 0.471$$

10. Percent Isokinetic:

$$I = (0.09450)\,\frac{T_s\,V_{mstd}}{P_s V_s A_n\,\theta\,(1-B_{ws})} = \frac{(0.0945)(535)(38.877)}{(29.92)(35.6665)(0.0003299)(64)(0.9662)}$$

$$= 90.28\%$$

BONNER ANALYTICAL TESTING COMPANY
RT. 13, BOX 85
HATTIESBURG, MS. 39401
(601)264-2854

Probe Nozzle Calibration

5/19/88

Theoretical diameter 0.312 inches

Actual diameter (inches)

	001	002	003	004	005	006
	0.1795	0.2460	0.3050	0.3670	0.4295	0.4930
	0.1790	0.2460	0.3050	0.3670	0.4290	0.4940
	0.1795	0.2465	0.3055	0.3675	0.4300	0.4940
	0.1790	0.2460	0.3050	0.3685	0.4290	0.4945
	0.1790	0.2460	0.3050	0.3670	0.4290	0.4940
	0.1790	0.2460	0.3050	0.3675	0.4295	0.4945
	0.1790	0.2460	0.3050	0.3675	0.4295	0.4940
	0.1795	0.2465	0.3055	0.3680	0.4295	0.4940
AVG.	0.1790	0.2460	0.3050	0.3675	0.4295	0.4940

Field Check

0.2460
0.2460
0.2465
0.2460 OK
0.2460

BONNER ANALYTICAL TESTING COMPANY
RT. 13, BOX 85
HATTIESBURG, MS. 39401
(601)264-2854

Pitot tube Calibration
Type S
Six foot (6) Pitot Tube

Date: 5/19/88 OK MSB

Point Number	P1	P2(a)	P2(b)	Cp
1	0.08	0.06	0.06	0.87
2	0.10	0.07	0.07	0.84
3	0.25	0.17	0.17	0.83
4	0.47	0.33	0.33	0.84
5	0.55	0.40	0.39	0.84
6	0.71	0.51	0.50	0.84
7	0.87	0.62	0.63	0.85
8	1.30	0.92	0.92	0.84

OK OK

P2(a) = A leg of Pitot Tube
P2(b) = B leg of Pitot Tube
Cp = (P2/ P1) 1/2

BONNER ANALYTICAL TESTING COMPANY
RT. 13, BOX 85
HATTIESBURG, MS. 39401
(601)264-2854

Therometer and Pyrometer Calibration

Date: 5/19/88

Temperature (Corrected)	Pyrometer	DGM* Inlet	DGM* Outlet	Last Impinge	Hot Box
60 F	60 F	60 F	60 F	60 F	60 F
110 F	110 F	110 F	110 F	110 F	110 F
125 F	~~125~~ 124 F	125 F	125 F	126 F	125 F
200 F	~~199~~ 201 F				200 F
300 F	301 F				301 F
500 F	500 F				
750 F	749 F				
800 F	~~801~~ 799 F				

5/19/88
OK MSB

DGM* Inlet: Dry Gas Meter, Inlet

DGM* Outlet: Dry Gas Meter, Outlet

Y = 1.05 Hercules

Y = Ratio of reading of wet test meter to dry test meter; tolerance for individual values +0.02 from average.

ΔH = 1.83 ΔH@ = Orifice pressure differential that equates to 0.75 cfm of air @ 68 F 29.92 inches of mercury, in. H2O; tolerance for individual values +0.20 from average.

$$Y_c = \frac{10}{V_m}\left[\frac{0.0319\,T_m}{P_{bar}}\right]^{.5}$$

ok 5/19/88 MSB

$$Y_c = \frac{10}{7.196}\left[\frac{0.0319(544)}{29.85}\right]^{.5}$$

$Y_c = 1.06$ ok MSB 5/19/88

$$\Delta H = 0.0319(1.83)\left(\frac{544}{29.85}\right)\frac{(10)^2}{(7.196)^2(1.85)^2}$$

$\Delta H = 1.86$ ok MSB 5/19/88

1.83 ±0.2

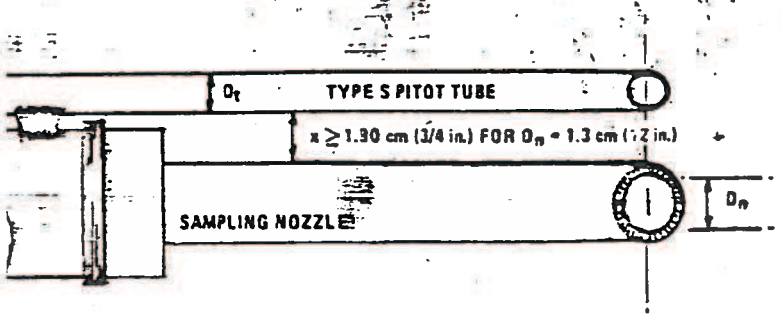

A. BOTTOM VIEW: SHOWING MINIMUM PITOT-NOZZLE SEPARATION.

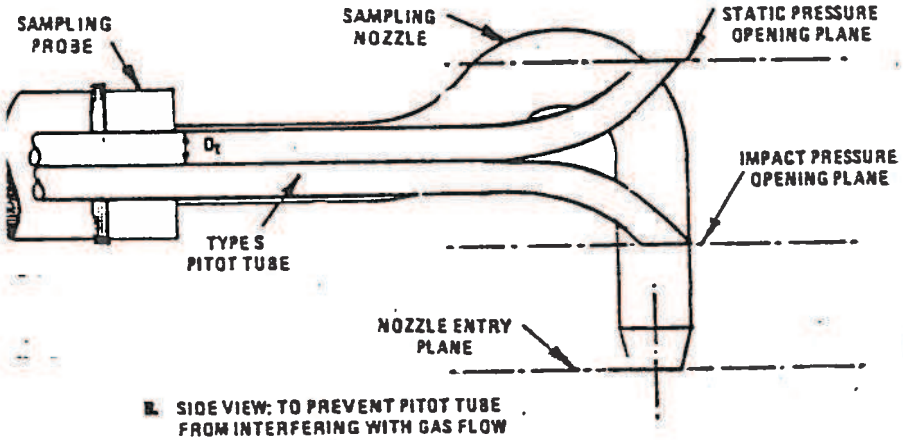

B. SIDE VIEW: TO PREVENT PITOT TUBE FROM INTERFERING WITH GAS FLOW STREAMLINES APPROACHING THE NOZZLE, THE IMPACT PRESSURE OPENING PLANE OF THE PITOT TUBE SHALL BE EVEN WITH OR ABOVE THE NOZZLE ENTRY PLANE.

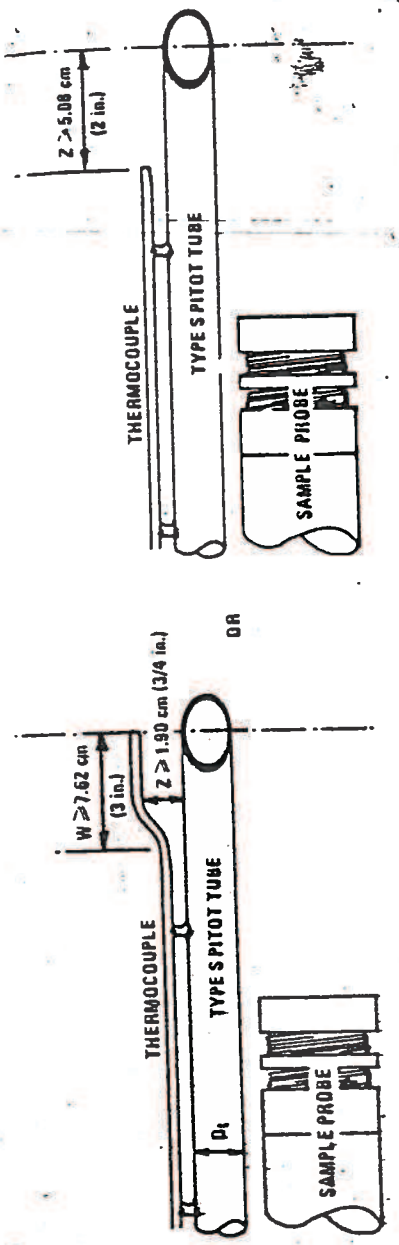

Figure 2-7. Proper thermocouple placement to prevent interference; D_t between 0.48 and 0.95 cm (3/16 and 3/8 in.).

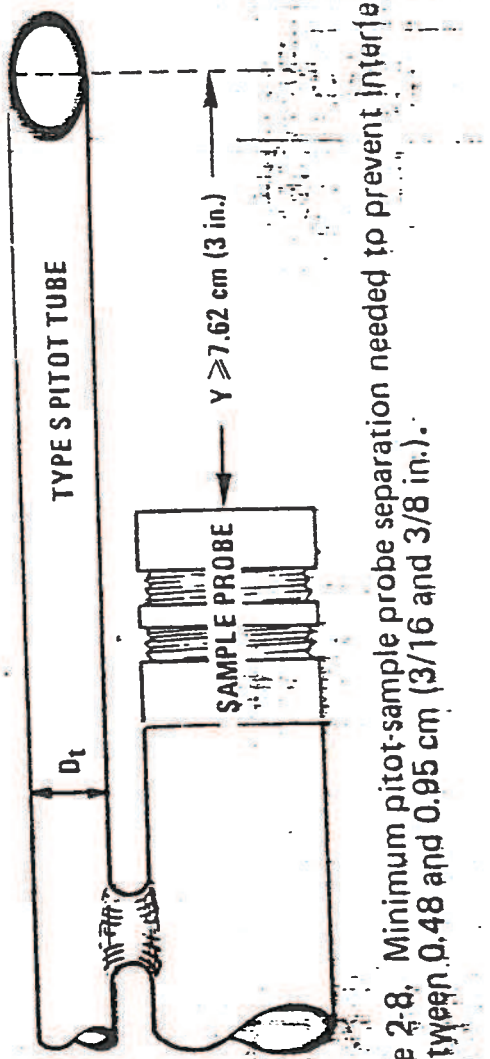

Figure 2-8. Minimum pitot-sample probe separation needed to prevent interference; D_t between 0.48 and 0.95 cm (3/16 and 3/8 in.).

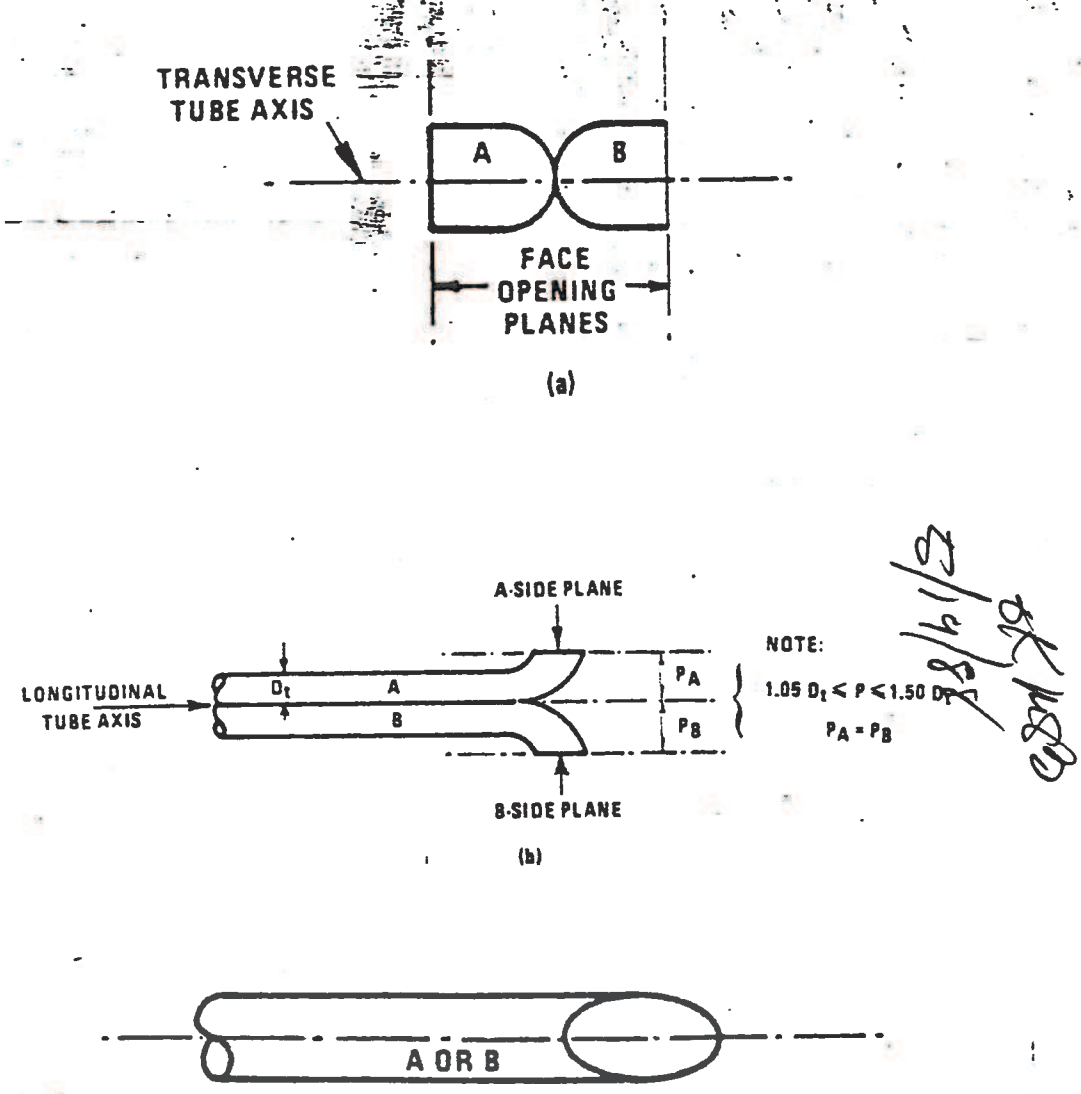

Figure 2-2. Properly constructed Type S pitot tube, shown in: (a) end view; face opening planes perpendicular to transverse axis; (b) top view; face opening planes parallel to longitudinal axis; (c) side view; both legs of equal length and centerlines coincident, when viewed from both sides. Baseline coefficient values of 0.84 may be assigned to pitot tubes constructed this way.

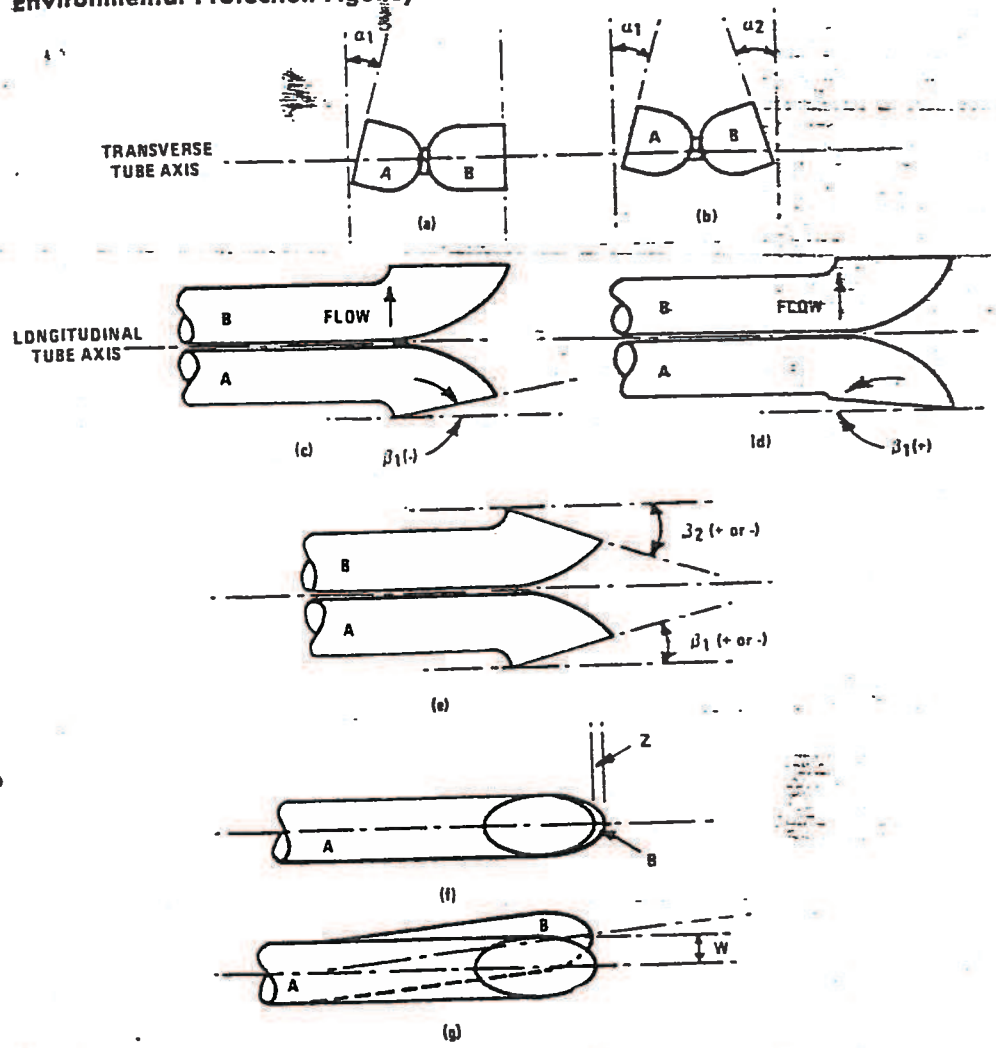

Figure 2-3. Types of face-opening misalignment that can result from field use or improper construction Type S pitot tubes. These will not affect the baseline value of Cp(s) so long as $\alpha 1$ and $\alpha 2$ 10°, $\beta 1$ and $\beta 2$ 5°, z 0.32 cm (1/8 in.) and w 0.08 cm (1/32 in.) (citation 11 in Section 6).

A standard pitot tube may be used instead of a Type S, provided that it meets the specifications of Sections 2.7 and 4.2; note, however, that the static and impact pressure holes of standard pitot tubes are susceptible to plugging in particulate-laden gas streams. Therefore, whenever a standard pitot tube is used to perform a traverse, adequate proof must be furnished that the openings of the pitot tube have not plugged up during the traverse period; this can be done by taking a velocity head (Δp) reading at the final traverse point, cleaning out th impact and static holes of the standar pitot tube by "back-purging" with pressu ized air, and then taking another Δp rea ing. If the Δp readings made before an after the air purge are the same (±5 pe cent), the traverse is acceptable. Otherwis reject the run. Note that if Δp at the fin traverse point is unsuitably low, anoth point may be selected. If "back-purging" regular intervals is part of the procedur then comparative Δp readings shall

Flue Gases. Leatherhead, England, The British Coal Utilisation Research Association, 1961. p. 129-133.

12. Knapp, K.T. The Number of Sampling Points Needed for Representative Source Sampling. In: Proceedings of the Fourth National Conference on Energy and the Environment, Theodore, L., et al. (ed.). Dayton, Dayton Section of the American Institute of Chemical Engineers. October 3-7, 1976. p. 563-568.

METHOD 2—DETERMINATION OF STACK GAS VELOCITY AND VOLUMETRIC FLOW RATE (TYPE S PITOT TUBE)

1. *Principle and Applicability*

1.1 Principle. The average gas velocity in a stack is determined from the gas density and from measurement of the average velocity head with a Type S (Stausscheibe or reverse type) pitot tube.

1.2 Applicability. This method is applicable for measurement of the average velocity of a gas stream and for quantifying gas flow.

This procedure is not applicable at measurement sites which fail to meet the criteria of Method 1, Section 2.1. Also, the method cannot be used for direct measurement in cyclonic or swirling gas streams; Section 2.4 of Method 1 shows how to determine cyclonic or swirling flow conditions. When unacceptable conditions exist, alternative procedures, subject to the approval of the Administrator, U.S. Environmental Protection Agency, must be employed to make accurate flow rate determinations; examples of such alternative procedures are: (1) to install straightening vanes; (2) to calculate the total volumetric flow rate stoichiometrically, or (3) to move to another measurement site at which the flow is acceptable.

2. *Apparatus*

Specifications for the apparatus are given below. Any other apparatus that has been demonstrated (subject to approval of the Administrator) to be capable of meeting the specifications will be considered acceptable.

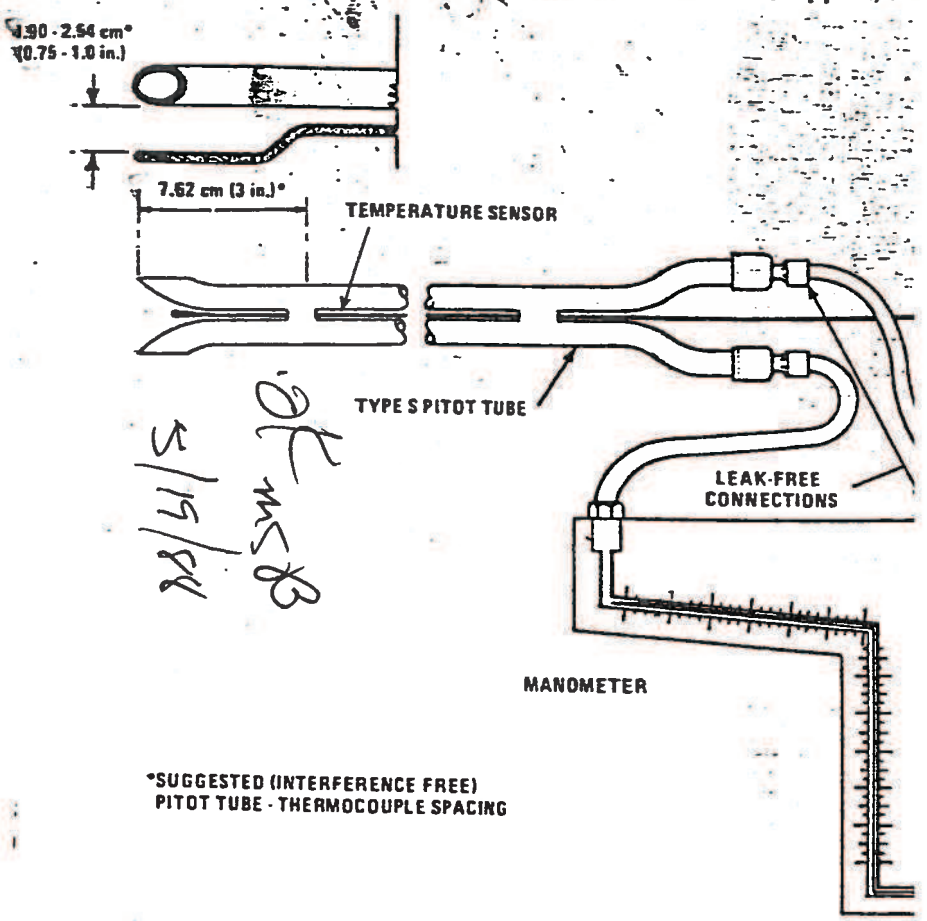

Figure 2-1. Type S pitot tube manometer assembly.

2.1 Type S Pitot Tube. The Type S pitot tube (Figure 2-1) shall be made of metal tubing (e.g. stainless steel). It is recommended that the external tubing diameter (dimension D_t, Figure 2-2b) be between 0.48 and 0.95 centimeters (3/16 and 3/8 inch). There shall be an equal distance from the base of each leg of the pitot tube to its face-opening plane (dimensions P_A and P_B, Figure 2-2b); it is recommended that this distance be between 1.05 and 1.50 times the external tubing diameter. The face openings of pitot tube shall, preferably, be align shown in Figure 2-2; however, slight alignments of the openings are permi (see Figure 2-3).

The Type S pitot tube shall have a k coefficient, determined as outlined in tion 4. an identification number shall signed to the pitot tube; this number be permanently marked or engraved o body of the tube.

Figure 2-4. Standard pitot tube design specifications.

5/19/88 ok

3. *Procedure*

3.1 Set up the apparatus as shown in Figure 2-1. Capillary tubing or surge tanks installed between the manometer and pitot tube may be used to dampen Δp fluctuations. It is recommended, but not required, that a pretest leak-check be conducted, as follows: (1) blow through the pitot impact opening until at least 7.6 cm (3 in.) H_2O velocity pressure registers on the manometer; then, close off the impact opening. The pressure shall remain stable for at least 15 seconds; (2) do the same for the static pressure side, except using suction to obtain the minimum of 7.6 cm (3 in.) H_2O. Other leak-check procedures, subject to the approval of the Administrator may be used.

3.2 Level and zero the manometer. Because the manometer level and zero may drift due to vibrations and temp changes, make periodic checks dur traverse. Record all necessary data a in the example data sheet (Figure 2-

3.3 Measure the velocity head a perature at the traverse points spec Method 1. Ensure that the proper d tial pressure gauge is being used range of Δp values encountered (see 2.2). If it is necessary to change to sensitive gauge, do so, and remeasur and temperature readings at each point. Conduct a post-test leak-chec datory), as described in Section 3.1 a validate the traverse run.

3.4 Measure the static pressure stack. One reading is usually adequa

3.5 Determine the atmospheric p

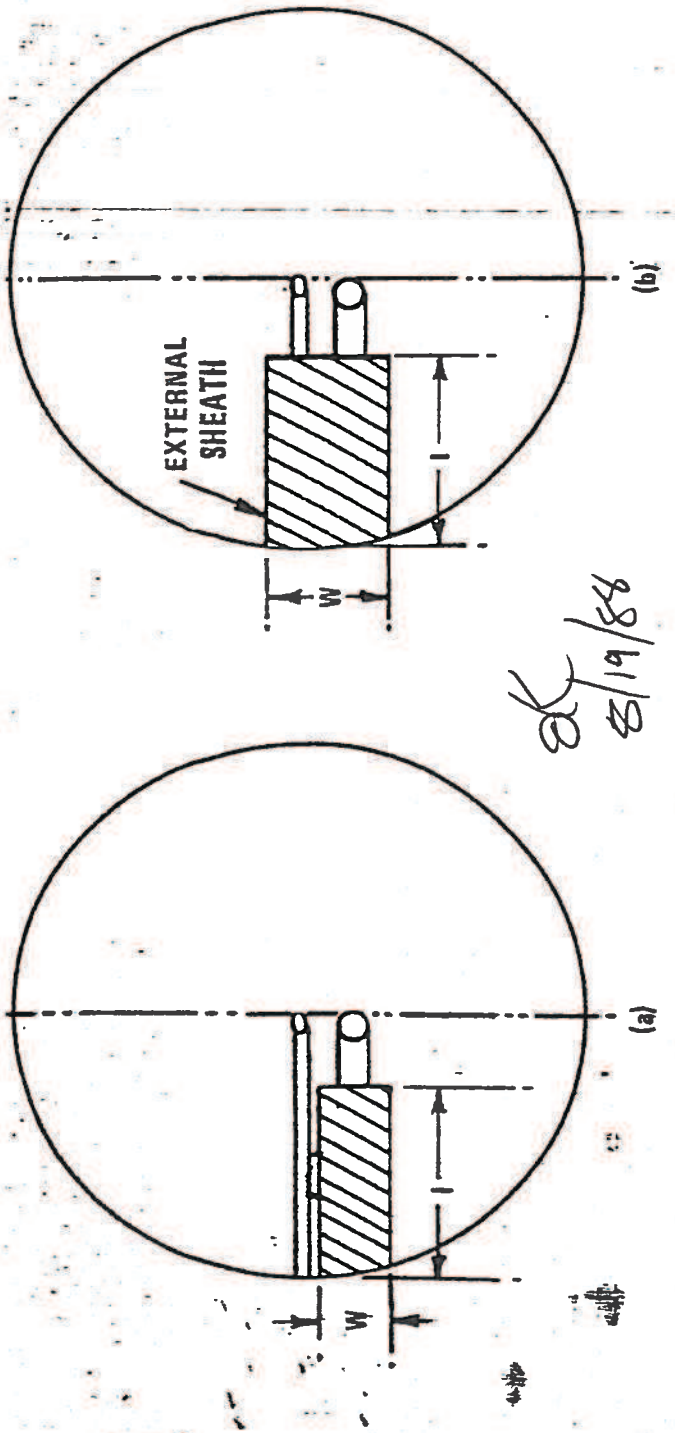

Figure 2-10. Projected-area models for typical pitot tube assemblies.

Figure 2-10. Projected-area models for typical pitot tube assemblies.

4.1.6 Field Use and Recalibration.

4.1.6.1 Field Use.

4.1.6.1.1 When a Type S pitot tube (isolated tube or assembly) is used in the field, the appropriate coefficient value (whether assigned or obtained by calibration) shall be used to perform velocity calculations. For calibrated Type S pitot tubes, the A side coefficient shall be used when the A side of the tube faces the flow, and the B side coefficient shall be used when the B side faces the flow; alternatively, the arithmetic average of the A and B side coefficient values may be used, irrespective of which side faces the flow.

4.1.6.1.2 When a probe assembly is used to sample a small duct (12 to 36 in. in diameter), the probe sheath sometimes blocks a significant part of the duct cross-section, causing a reduction in the effective value of $C_{p(s)}$. Consult Citation 9 in Section 6 for details. Conventional pitot-sampling probe assemblies are not recommended for use in ducts having inside diameters smaller than 12 inches (Citation 16 in Section 6).

4.1.6.2 Recalibration.

4.1.6.2.1 Isolated Pitot Tubes. After each field use, the pitot tube shall be carefully reexamined in top, side, and end views. If the pitot face openings are still aligned within the specifications illustrated in Figure 2-2 or 2-3, it can be assumed that the baseline coefficient of the pitot tube has not changed. If, however, the tube has been damaged to the extent that it no longer meets the specifications of Figure 2-2 or 2-3, the damage shall either be repaired to restore proper alignment of the face openings or the tube shall be discarded.

4.1.6.2.2 Pitot Tube Assemblies. After each field use, check the face opening alignment of the pitot tube, as in Section 4.1.6.2.1; also, remeasure the intercomponent spacings of the assembly. If the intercomponent spacings have not changed and the face opening alignment is acceptable, it can be assumed that the coefficient of the assembly has not changed. If the face opening alignment is no longer within the specifications of Figures 2-2 or 2-3, either repair the damage or replace the pitot tube (calibrating the new assembly, if necessary). If the intercomponent spacings have changed, restore the original spacings or recalibrate the assembly.

4.2 Standard pitot tube (if applicable). If a standard pitot tube is used for the velocity traverse, the tube shall be constructed according to the criteria of Section 2.7 and shall be assigned a baseline coefficient value of 0.99. If the standard pitot tube is used as part of an assembly, the tube shall be in an interference-free arrangement (subject to the approval of the Administrator).

4.3 Temperature Gauges. After each field use, calibrate dial thermometers, liquid-filled bulb thermometers, thermocouple-potentiometer systems, and other gauges at a temperature within 10 percent of the average absolute stack temperature. For temperatures up to 405° C (761° F), use an ASTM mercury-in-glass reference thermometer, or equivalent, as a reference; alternatively, either a reference thermocouple and potentiometer (calibrated by NBS) or thermometric fixed points, e.g., ice bath and boiling water (corrected for barometric pressure) may be used. For temperatures above 405° C (761° F), use an NBS-calibrated reference thermocouple-potentiometer system or an alternate reference, subject to the approval of the Administrator.

If, during calibration, the absolute temperatures measured with the gauge being calibrated and the reference gauge agree within 1.5 percent, the temperature data taken in the field shall be considered valid. Otherwise, the pollutant emission test shall either be considered invalid or adjustments (if appropriate) of the test results shall be made, subject to the approval of the Administrator.

4.4 Barometer. Calibrate the barometer used against a mercury barometer.

5. *Calculations*

Carry out calculations, retaining at least one extra decimal figure beyond that of the acquired data. Round off figures after final calculation.

5.1 Nomenclature.

A = Cross-sectional area of stack, m^2 (ft^2).

B_{ws} = Water vapor in the gas stream (from Method 5 or Reference Method 4), proportion by volume.

C_p = Pitot tube coefficient, dimensionless.

K_p = Pitot tube constant,

$$34.97 \frac{m}{sec}\left[\frac{(g/g\text{-mole})(mm\ Hg)}{(°K)(mm\ H_2O)}\right]^{1/2}$$

for the metric system and

$$85.49 \frac{ft}{sec}\left[\frac{(lb/lb\text{-mole})(in.\ Hg)}{(°R)(in.\ H_2O)}\right]^{1/2}$$

for the English system.

M_d = Molecular weight of stack gas, dry basis (see Section 3.6) g/g-mole (lb/lb-mole).

M_s = Molecular weight of stack gas, wet basis, g/g-mole (lb/lb-mole).

$M_s = M_d(1-B_{ws}) + 18.0\ B_{ws}$

MISSISSIPPI DEPARTMENT OF NATURAL RESOURCES
Bureau of Pollution Control
P.O. Box 10385
Jackson, Mississippi 39289-0385
(601) 961-5171

MEMORANDUM

TO: File

FROM: Jesse Thompson, Jr.

SUBJECT: Stack Test Review

DATE: June 2, 1989

Facility No. 110-0800-00001-063

The review of the test data submitted for the Kettle No. 1 water scrubber has been finished. The review did not reveal any problems. EPA Method 25 was used. I recommend that the test be accepted.

JT:dfj

BONNER ANALYTICAL TESTING COMPANY
RT. 14, BOX 509
HATTIESBURG, MS 39402
(601) 264-2854

EPA METHOD 25

VOLATILE ORGANIC CARBON

Facility Hercules, Inc. - Hattiesburg, MS

Location 063 - Kettle #1 Water Scrubber

Date 5/24/88 Operators JS/JP/MSB

Run # 1
Bag # 001
Trap # 001

Barometric Press (in Hg) 30.06

Ambient Temp. (F) 76

Wet Bulb 72
Dry Bulb 78
% Moisture <1

Sample Train Leak Rate (<1 cc/min) <1

Pretest Vacuum 30 in H_2O 0.30 in/min Leakrate (<1.6 in/min)

Post Test Vacuum 30 in H_2O 0.30 in/min Leakrate (<1.6 in/min)

DRY GAS METER

Meter # 75021

Meter Coef: 0.99

Date Calibrated 5/19/88

	Time	Mass Flow	Source Volumetric Flow Data		
	Clock/Sample	Meter Reading	Cubic feet	Dry Gas Meter Temp (F)	Static Press (in H_2O)
I	0740	130 cc/min	1960	76	0.8
1	0750	130 cc/min	1991	78	0.8
2	0800	130 cc/min	2038	78	0.8
3	0810	130 cc/min	2065	78	0.8
4	0820	130 cc/min	2106	78	0.8
5	0830	130 cc/min	2142	79	0.8
6	0840	130 cc/min	2184	79	0.8
7					
8					
9					
10					
11					
12					
Total	60		224		
Average		130 cc/min		78 (538R)	0.8 (30.12)

RT. 14, BOX 509
HATTIESBURG, MS 39402
(601) 264-2854

BYRON METHOD 25 Lab Data Sheet

FACILITY Hercules, Inc.

LOCATION 063 Kettle #1 W.S RUN # 1

Bag I.D. 001
Volume Collected 7.800 Volume Analyzed 7.800
if changed, why

Trap I.D. 001
Volume Collected 7.800 Burnout Volume 5.000

BAG ANALYSIS

Date 5/30/88 Analyst JP

				Average
NMHC	24711	25111	24905	24909
CO	373	374	380	376
CO_2	5180	5100	5055	5111
CH_4	1997	2006	2016	2006

TRAP ANALYSIS

Date 5/25/88 Temperature 300 C Analyst JP

				Average
NMHC	<3	<3	<3	<3
CO	<3	<3	<3	<3
CO_2	6644	6642	6965	6857
CH_4	<3	<3	<3	<3

General Comments

VOC = volatile organic carbon - This is the sum of the VOC collected in the trap plus any VOC that passes through the trap into the bag. In the analysis the bag portion is the BAG NMHC (nonmethane hydrocarbon); the trap is burned out and all the VOC converted to carbon dioxide prior to analysis thus the trap portion is the TRAP CO_2.

$$VOC_+ \text{ lb/hr} = \frac{(VOC\ BAG_{ave} + VOC\ TRAP_{ave})\ SCFH}{32 \times 10^6}$$

$$VOC_+ \text{ lb/hr} = \frac{(24909 \text{ bag} + 6857 \text{ trap})\ 219.1\ SCFH}{32 \times 10^6}$$

$$VOC_+ = \boxed{0.217 \text{ lb/hr}}$$

RT. 14, BOX 509
HATTIESBURG, MS 39401
(601) 264-2854

Facility Hercules, Inc.

Location 063 - Kettle #1 W.S.

Run # 1

1. Standard Cubic Feet Per Run (Vms)

$$Vms = 17.647 \times Ym \ (Vmf - Vmi) \ \frac{(Pb + \frac{\Delta Pm}{13.6})}{Tm}$$

$$Vms = (17.647)(0.99)(224)\left(\frac{30.12}{538}\right)$$

$$= \boxed{219.1 \text{ CF}}$$

2. Standard Cubic Feet Per Hour (SCFH)

$$SCFH = \frac{Vms}{HR} = \boxed{219.1}$$

3. Gas Flow Rate

$$Qs = \frac{Vms}{\theta}$$

[illegible] TESTING COMPANY
RT. 14, BOX 509
HATTIESBURG, MS 39402
(601) 264-2854

EPA METHOD 25

VOLATILE ORGANIC CARBON

Facility Hercules, Inc. - Hattiesburg, MS

Location 063 - Kettle #1 Water Scrubber

Date 5/24/88 Operators JS/JP/MSB

Run # 2
Bag # 002
Trap # 002

Barometric Press (in Hg) 30.06

Ambient Temp. (F) 76

Wet Bulb 72
Dry Bulb 81
% Moisture <1

Sample Train Leak Rate (<1 cc/min) <1

Pretest Vacuum 30 in H_2O 0.30 in/min Leakrate (<1.6 in/min)

Post Test Vacuum 30 in H_2O 0.30 in/min Leakrate (<1.6 in/min)

DRY GAS METER

Meter # 75021

Meter Coef:

Date Calibrated

	Source Volumetric Flow Data				
	Time	Mass Flow		Dry Gas Meter	Static
	Clock/Sample	Meter Reading	Cubic feet	Temp (F)	Press (in H_2O)
I	0900	130 cc/min	2185	79	0.8
1	0910	130 cc/min	2225	80	0.8
2	0920	130 cc/min	2206	81	0.8
3	0930	130 cc/min	2311	81	0.8
4	0940	130 cc/min	2354	82	0.8
5	0950	130 cc/min	2395	82	0.8
6	1000	130 cc/min	2432	82	0.8
7					
8					
9					
10					
11					
12					
Total	60		247		
Average		130 cc/min		81 (541R)	0.8 (30.13)

BONNER ANALYTICAL TESTING COMPANY
RT. 14, BOX 509
HATTIESBURG, MS 39402
(601) 264-2854

BYRON METHOD 25 Lab Data Sheet

FACILITY Hercules, Inc.

LOCATION 063 Kettle #1 W.S RUN # 2

Bag I.D. 002
Volume Collected 7.800 Volume Analyzed 7.800
if changed, why

Trap I.D. 002
Volume Collected 7.800 Burnout Volume 5.000

BAG ANALYSIS

Date 5/30/88 Analyst JP/MSB

				Average
NMHC	49200	49055	48220	48825
CO	2257	2302	2216	2258
CO_2	14094	13999	14054	14049
CH_4	9672	9616	9595	9624

TRAP ANALYSIS

Date 5/25/88 Temperature 300 C Analyst JP/MSB

				Average
NMHC	<3	<3	<3	<3
CO	<3	<3	<3	<3
CO_2	6635	6666	6696	6666
CH_4	<3	<3	<3	<3

General Comments

VOC = volatile organic carbon - This is the sum of the VOC collected in the trap plus any VOC that passes through the trap into the bag. In the analysis the bag portion is the BAG NMHC (nonmethane hydrocarbon); the trap is turned out and all the VOC converted to carbon dioxide prior to analysis thus the trap portion is the TRAP CO_2.

$$VOC_+ \text{ lb/hr} = \frac{(\text{VOC BAG}_{ave} + \text{VOC TRAP}_{ave})\ \text{SCFH}}{32 \times 10^6}$$

$$VOC_+ \text{ lb/hr} = \frac{(48825 \text{ bag} + 6666 \text{ trap})\ 240.2\ \text{SCFH}}{32 \times 10^6}$$

VOC_+ = 0.416 lb/hr

BONNER ANALYTICAL TESTING COMPANY
RT. 14, BOX 509
HATTIESBURG, MS 39401
(601) 264-2854

Facility Hercules, Inc.

Location 063 - Kettle #1 W.S.

Run # 2

1. Standard Cubic Feet Per Run (Vms)

$$Vms = 17.647 \times Ym \ (Vmf - Vmi) \ \frac{(Pb + \frac{\Delta Pm}{13.6})}{Tm}$$

$$Vms = (17.647)(0.99)(247)\frac{(30.12)}{541}$$

$$= \boxed{240.2}$$

2. Standard Cubic Feet Per Hour (SCFH)

$$SCFH = \frac{Vms}{HR} = \boxed{240.2}$$

3. Gas Flow Rate

$$Qs = \frac{Vms}{\theta}$$

RT. 14, BOX 509
HATTIESBURG, MS 39402
(601) 264-2854

EPA METHOD 25

VOLATILE ORGANIC CARBON

Facility Hercules, Inc. - Hattiesburg, MS

Location 063 - Kettle #1 Water Scrubber

Date 5/24/88 Operators JS/JP/MSB

Run # 3
Bag # 003
Trap # 003

Barometric Press (in Hg) 30.06

Ambient Temp. (F) 77

Wet Bulb 74
Dry Bulb 86
% Moisture <1

Sample Train Leak Rate (<1 cc/min) <1

Pretest Vacuum 30 in H_2O 0.30 in/min Leakrate (<1.6 in/min)

Post Test Vacuum 30 in H_2O 0.30 in/min Leakrate (<1.6 in/min)

DRY GAS METER

Meter # 75021

Meter Coef:

Date Calibrated

	Time	Mass Flow	Source Volumetric Flow Data		
				Dry Gas Meter	Static
	Clock/Sample	Meter Reading	Cubic feet	Temp (F)	Press (in H_2O)
I	1020	130 cc/min	2444	82	0.8
1	1030	130 cc/min	2475	86	0.8
2	1040	140 cc/min	2513	86	0.8
3	1050	140 cc/min	2557	86	0.8
4	1100	140 cc/min	2588	88	0.8
5	1110	140 cc/min	2626	88	0.8
6	1120	140 cc/min	2664	89	0.8
7					
8					
9					
10					
11					
12					
Total	60		220		
Average		137 cc/min		86 (546R)	0.8 (30.12)

BONNER ANALYTICAL TESTING COMPANY
RT. 14, BOX 509
HATTIESBURG, MS 39402
(601) 264-2854

BYRON METHOD 25 Lab Data Sheet

FACILITY Hercules, Inc.

LOCATION 063 Kettle #1 W.S RUN # 3

Bag I.D. 003
Volume Collected 8.220 Volume Analyzed 8.220
if changed, why

Trap I.D. 003
Volume Collected 8.220 Burnout Volume 5.00

BAG ANALYSIS

Date 5/30/88 Analyst JP

				Average
NMHC	32888	32016	32004	32302
CO	2143	2095	2200	2146
CO_2	6820	6779	6767	6789
CH_4	6185	6105	6218	6169

TRAP ANALYSIS

Date 5/25/88 Temperature 300 C Analyst JP

				Average
NMHC	<3	<3	<3	<3
CO	<3	<3	<3	<3
CO_2	11982	12051	12153	12062
CH_4	<3	<3	<3	<3

General Comments

VOC = volatile organic carbon - This is the sum of the VOC collected in the trap plus any VOC that passes through the trap into the bag. In the analysis the bag portion is the BAG NMHC (nonmethane hydrocarbon); the trap is burned out and all the VOC converted to carbon dioxide prior to analysis thus the trap portion is the TRAP CO_2.

$$VOC_+ \text{ lb/hr} = \frac{(\text{VOC BAG}_{ave} + \text{VOC TRAP}_{ave})\ \text{SCFH}}{32 \times 10^6}$$

$$VOC_+ \text{ lb/hr} = \frac{(32302 \text{ bag} + 12062 \text{ trap})\ 212.0\ \text{SCFH}}{32 \times 10^6}$$

VOC_+ = 0.294 lb/hr

BONNER ANALYTICAL TESTING COMPANY
RT. 14, BOX 509
HATTIESBURG, MS 39401
(601) 264-2854

Facility Hercules, Inc.

Location 063 - Kettle #1 W.S.

Run # 3

1. Standard Cubic Feet Per Run (Vms)

$$Vms = 17.647 \times Ym \ (Vmf - Vmi) \ \frac{(Pb + \frac{\Delta Pm}{13.6})}{Tm}$$

$$Vms = (17.647)(0.99)(220)\left(\frac{30.12}{546}\right)$$

$$= \boxed{212.0 \text{ CF}}$$

2. Standard Cubic Feet Per Hour (SCFH)

$$SCFH = \frac{Vms}{HR} = \boxed{212.0}$$

3. Gas Flow Rate

$$Qs = \frac{Vms}{\theta}$$

BONNER ANALYTICAL TESTING COMPANY
RT. 14, BOX 509
HATTIESBURG, MS 39402
(601) 264-2854

EPA METHOD 25

VOLATILE ORGANIC CARBON

Facility Hercules

Location 063 - KEH6 #1 Water Scrubber

Date 5/24/88 Operators JS/JP/MSB

Run # 1
Bag # 001
Trap # 001

Barometric Press (in Hg) 30.06

Ambient Temp. (F) 76

Wet Bulb 72
Dry Bulb 78
% Moisture <1

Sample Train Leak Rate ((1 cc/min) <1.

Pretest Vacuum 30 in H_2O 0.30 in/min Leakrate ((1.6 in/min)

Post Test Vacuum 30 in H_2O 0.30 in/min Leakrate ((1.6 in/min)

DRY GAS METER

Meter # 75021

Meter Coef: 0.99

Date Calibrated 5/19/88

	Time	Mass Flow	Source Volumetric Flow Data		
	Clock/Sample	Meter Reading	Cubic feet	Dry Gas Meter Temp(F)	Static Press (in H_2O)
I	0740	130	1960	76	0.8
1	0750	130	1997	78	0.8
2	0800	130	2038	78	0.8
3	0810	130	2065	78	0.8
4	0820	130	2106	78	0.8
5	0830	130	2142	79	0.8
6	0840	130	2184	79	0.8
7					
8					
9					
10					
11					
12					
Total	60		224 cf		
Average		130 cc/min		78 (538R)	0.8 (30.12)

BONNER ANALYTICAL TESTING COMPANY
RT. 14, BOX 509
HATTIESBURG, MS 39402
(601) 264-2854

BYRON METHOD 25 Lab Data Sheet

FACILITY Hercules

LOCATION 063 Keith #1 WS RUN 1

Bag I.D. 001
Volume Collected 7.800 Volume Analyzed 7.800
if changed, why

Trap I.D. 001
Volume Collected 7.800 Burnout Volume 5.006

BAG ANALYSIS

Date 5/30/88 Analyst JP

				Average
NMHC	24711	25111	24905	24909
CO	373	374	380	376
CO_2	5180	5100	5055	5111
CH_4	1997	2006	2016	2006

TRAP ANALYSIS

Date 5/25/88 Temperature 300 Analyst JP

				Average
NMHC	<3	<3	<3	<3
CO	<3	<3	<3	<3
CO_2	6644	6642	6965	6857 ~~6859~~
CH_4	<3	<3	<3	<3

General Comments

VOC = volatile organic carbon - This is the sum of the VOC collected in the trap plus any VOC that passes through the trap into the bag. In the analysis the bag portion is the BAG NMHC (nonmethane hydrocarbon); the trap is burned out and all the VOC converted to carbon dioxide prior to analysis thus the trap portion is the TRAP CO_2.

$$VOC_t \text{ lb/hr} = \frac{(VOC\ BAG_{ave} + VOC\ TRAP_{ave})\ SCFH}{32 \times 10^6}$$

$$VOC_t \text{ lb/hr} = \frac{(24909 \text{ bag} + 6857 \text{ trap})\ 219.1 \text{ SCFH}}{32 \times 10^6}$$

VOC_t = 0.217

BONNER ANALYTICAL TESTING COMPANY
RT. 14, BOX 509
HATTIESBURG, MS 39401
(601) 264-2854

Facility Hercules

Location 063 Kettle #1 WS

Run 1

1. Standard Cubic Feet Per Run (Vms)

$$Vms = 17.647 \times Ym \ (Vmf - Vmi) \ \frac{(Pb + \frac{DPm}{13.6})}{Tm}$$

$$Vms = 17.647 * 0.99 * 224 * \frac{30.12}{538}$$

$$= \boxed{219.1 \text{ CF}}$$

2. Standard Cubic Feet Per Hour (SCFH)

$$SCFH = \frac{Vms}{HR}$$

219.1

3. Gas Flow Rate

$$Qs = \frac{Vms}{J}$$

BONNER ANALYTICAL TESTING COMPANY
RT. 14, BOX 509
HATTIESBURG, MS 39402
(601) 264-2854

EPA METHOD 25

VOLATILE ORGANIC CARBON

Facility Herculon

Location 063

Date 5/24/88 Operators JS/JP/MGB

Run # 2
Bag # 002
Trap # 002

Barometric Press (in Hg) 30.06

Ambient Temp. (F) 76

Wet Bulb 72
Dry Bulb 81
% Moisture 4

Sample Train Leak Rate (<1 cc/min) <1

Pretest Vacuum 30 in H_2O 0.30 in/min Leakrate (<1.6 in/min)

Post Test Vacuum 30 in H_2O 0.30 in/min Leakrate (<1.6 in/min)

DRY GAS METER

Meter # 75021

Meter Coef:

Date Calibrated

	Source Volumetric Flow Data				
	Time	Mass Flow		Dry Gas Meter	Static
	Clock/Sample	Meter Reading	Cubic feet	Temp(F)	Press (in H_2O)
I	0900	130 cc/mn	2185	79	0.8
1	0910	130	2225	80	0.8
2	0920	130	2206	81	0.8
3	0930	130	2311	81	0.8
4	0940	130	2354	82	0.8
5	0950	130	2395	82	0.8
6	1000	130	2432	82	0.8
7					
8					
9					
10					
11					
12					
Total	60		247cf		
Average		130 cc/min		81 (541R)	0.8 (30.12)

BONNER ANALYTICAL TESTING COMPANY
RT. 14, BOX 509
HATTIESBURG, MS 39402
(601) 264-2854

BYRON METHOD 25 Lab Data Sheet

FACILITY HERCULES

LOCATION 063 Kotte #1 WS RUN 2

Bag I.D. 002
Volume Collected 7.800 Volume Analyzed 7.800
if changed, why

Trap I.D. 002
Volume Collected 7.800 Burnout Volume 5.000

BAG ANALYSIS

Date 5/30/88 Analyst JP/MSB

				Average
NMHC	49200	49055	48220	48825
CO	2257	2302	2216	2258
CO_2	14094	13999	14054	14049
CH_4	9672	9616	9595	9624

TRAP ANALYSIS

Date 5/25/88 Temperature 300 Analyst JP/MSB

				Average
NMHC	<3	<3	<3	<3
CO	<3	<3	<3	<3
CO_2	6635	6666	6696	6666
CH_4	<3	<3	<3	<3

General Comments

VOC = volatile organic carbon - This is the sum of the VOC collected in the trap plus any VOC that passes through the trap into the bag. In the analysis the bag portion is the BAG NMHC (nonmethane hydrocarbon); the trap is burned out and all the VOC converted to carbon dioxide prior to analysis thus the trap portion is the TRAP CO_2.

$$VOC_t \text{ lb/hr} = \frac{(VOC\ BAG_{ave} + VOC\ TRAP_{ave})\ SCFH}{32 \times 10^6}$$

$$VOC_t \text{ lb/hr} = \frac{(48825 \text{ bag} + 6666 \text{ trap})\ 240.2\ SCFH}{32 \times 10^6}$$

VOC_t = 0.416

BONNER ANALYTICAL TESTING COMPANY
RT. 14, BOX 509
HATTIESBURG, MS 39401
(601) 264-2854

Facility HERCules

Location 063

Run 2

1. Standard Cubic Feet Per Run (Vms)

$$Vms = 17.647 \times Ym \ (Vmf - Vmi) \ \frac{(Pb + \frac{DPm}{13.6})}{Tm}$$

$$Vms = 17.647 * .99 (247) \left(\frac{30.12}{541}\right)$$

$$= \boxed{240.2}$$

2. Standard Cubic Feet Per Hour (SCFH)

$$SCFH = \frac{Vms}{HR}$$ 240.2

3. Gas Flow Rate

$$Qs = \frac{Vms}{J}$$

BONNER ANALYTICAL TESTING COMPANY
RT. 14, BOX 509
HATTIESBURG, MS 39402
(601) 264-2854

EPA METHOD 25

VOLATILE ORGANIC CARBON

Facility Hercules

Location 063

Date 5/24/88 Operators JS/JP/MSB

Run # 3
Bag # 003
Trap # 003

Barometric Press (in Hg) 30.06

Ambient Temp. (F) 77

Wet Bulb 74
Dry Bulb 86
% Moisture 21

Sample Train Leak Rate (<1 cc/min) <1

Pretest Vacuum 30 in H_2O 0.30 in/min Leakrate (<1.6 in/min)

Post Test Vacuum 30 in H_2O 0.30 in/min Leakrate (<1.6 in/min)

DRY GAS METER

Meter # 70 75021

Meter Coef:

Date Calibrated

	Time Clock/Sample	Mass Flow Meter Reading	Source Volumetric Flow Data: Cubic feet	Dry Gas Meter Temp(F)	Static Press (in H_2O)
I	1020	130 cc/min	2444	82	0.8
1	1030	130	2475	86	0.8
2	1040	140	2513	86	0.8
3	1050	140	2557	86	0.8
4	1100	140	2588	88	0.8
5	1110	140	2626	88	0.8
6	1120	140	2664	84	0.8
7					
8					
9					
10					
11					
12					
Total	60		220		
Average		137 cc/min		86 (546R)	0.8 (30.12)

BONNER ANALYTICAL TESTING COMPANY
RT. 14, BOX 509
HATTIESBURG, MS 39402
(601) 264-2854

BYRON METHOD 25 Lab Data Sheet

FACILITY Hercules

LOCATION 063 Kettle #1 WS RUN 3

Bag I.D. 003
Volume Collected 8.220 Volume Analyzed 8.220
if changed, why

Trap I.D. 003
Volume Collected 8.220 Burnout Volume 500

BAG ANALYSIS

Date 5/30/88 Analyst JP

				Average
NMHC	32888	32016	32004	32302
CO	2143	2095	2200	2146
CO_2	6820	6779	6767	6789
CH_4	6185	6105	6218	6169

TRAP ANALYSIS

Date 5/25/88 Temperature 300 Analyst MSB/JP

				Average
NMHC	<3	<3	<3	<3
CO	<3	<3	<3	<3
CO_2	11982	12051	12153	12062
CH_4	<3	<3	<3	<3

General Comments

VOC = volatile organic carbon - This is the sum of the VOC collected in the trap plus any VOC that passes through the trap into the bag. In the analysis the bag portion is the BAG NMHC (nonmethane hydrocarbon); the trap is burned out and all the VOC converted to carbon dioxide prior to analysis thus the trap portion is the TRAP CO_2.

$$VOC_t \text{ lb/hr} = \frac{(VOC\ BAG_{ave} + VOC\ TRAP_{ave})\ SCFH}{32 \times 10^6}$$

$$VOC_t \text{ lb/hr} = \frac{(32302_{bag} + 12062_{trap})\ 212.0\ SCFH}{32 \times 10^6}$$

VOC_t = 8.294

RT. 14, BOX 509
HATTIESBURG, MS 39401
(601) 264-2854

Facility Hercules

Location 063 Kettle #1 WS

Run 3

1. Standard Cubic Feet Per Run (Vms)

$$Vms = 17.647 \times Ym \ (Vmf - Vmi) \ \frac{(Pb + \frac{DPm}{13.6})}{Tm}$$

$$Vms = 17.647 * 0.997 \ 220 \ \frac{30.12}{546}$$

$$= 212.6$$

2. Standard Cubic Feet Per Hour (SCFH)

$$SCFH = \frac{Vms}{HR}$$ 212.0

3. Gas Flow Rate

$$Qs = \frac{Vms}{J}$$

MISSISSIPPI DEPARTMENT OF NATURAL RESOURCES
Bureau of Pollution Control
P.O. Box 10385
Jackson, Mississippi 39289-0385
(601) 961-5171

MEMORANDUM

TO: File

FROM: Jesse Thompson, Jr.

SUBJECT: Stack Test Review

DATE: June 2, 1989

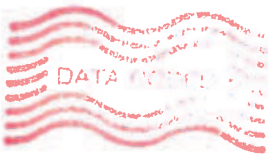

Facility No. 110-0800-00001-071

The review of the data submitted for the Flaking Belt vapor water emission point 071 has been finished. EPA Method 25 was utilized. The review did not reveal any problems.

JT:dfj

BONNER ANALYTICAL TESTING COMPANY
RT. 14, BOX 509
HATTIESBURG, MS 39402
(601) 264-2854

EPA METHOD 25

VOLATILE ORGANIC CARBON

Facility Hercules, Inc. - Hattiesburg, MS

Location 071 - Flaking Belt Vapor Water Scrubber

Date 5/18/88 Operators JP/MSB

Run # 1
Bag # 001
Trap # 001

Barometric Press (in Hg) 30.02

Ambient Temp. (F) 74

Wet Bulb 72
Dry Bulb 80
% Moisture <1

Sample Train Leak Rate (<1 cc/min) <1

Pretest Vacuum 30 in H_2O 0.35 in/min Leakrate (<1.6 in/min)

Post Test Vacuum 30 in H_2O 0.35 in/min Leakrate (<1.6 in/min)

DRY GAS METER

Meter # 336323

Meter Coef: 0.991

Date Calibrated 5/19/88

	Time	Mass Flow	Source Volumetric Flow Data		
				Dry Gas Meter	Static
	Clock/Sample	Meter Reading	Cubic feet	Temp (F)	Press (in H_2O)
I	0845	108 cc/min	55.32	78	0.3
1	0855	108 cc/min	79.32	79	0.3
2	0905	108 cc/min	104.25	79	0.3
3	0915	108 cc/min	130.25	80	0.3
4	0925	108 cc/min	156.05	80	0.3
5	0935	108 cc/min	180.25	80	0.3
6	0945	108 cc/min	203.00	81	0.3
7					
8					
9					
10					
11					
12					
Total	60		147.68		
Average		108 cc/min		80 (540R)	0.3 (30.05)

BYRON METHOD 25 Lab Data Sheet

FACILITY Hercules, Inc.

LOCATION 071 - FBVWS RUN # 1

Bag I.D. 001
Volume Collected 6.480 Volume Analyzed 6.480
if changed, why

Trap I.D. 001
Volume Collected 6.480 Burnout Volume

BAG ANALYSIS

Date 5/30/88 Analyst JP

				Average
NMHC	< 3	< 3	< 3	< 3
CO	< 3	< 3	< 3	< 3
CO_2	552	541	542	545
CH_4	< 3	< 3	< 3	< 3

TRAP ANALYSIS

Date 5/25/88 Temperature 300 C Analyst JP

				Average
NMHC	<3	<3	<3	<3
CO	<3	<3	<3	<3
CO_2	373	366	361	367
CH_4	<3	<3	<3	<3

General Comments

VOC = volatile organic carbon - This is the sum of the VOC collected in the trap plus any VOC that passes through the trap into the bag. In the analysis the bag portion is the BAG NMHC (nonmethane hydrocarbon); the trap is burned out and all the VOC converted to carbon dioxide prior to analysis thus the trap portion is the TRAP CO_2.

$$VOC_+ \text{ lb/hr} = \frac{(VOC\ BAG_{ave} + VOC\ TRAP_{ave})\ SCFH}{32 \times 10^6}$$

$$VOC_+ \text{ lb/hr} = \frac{(0 \text{ bag} + 367 \text{ trap})\ 143.72\ SCFH}{32 \times 10^6}$$

$$VOC_+ = \boxed{1.646 \times 10^{-3} \text{ lb/hr}}$$

BONNER ANALYTICAL TESTING COMPANY
RT. 14, BOX 509
HATTIESBURG, MS 39401
(601) 264-2854

Facility Hercules, Inc.

Location 071 - Flaking Belt Vapor Water Scrubber

Run # 1

1. Standard Cubic Feet Per Run (Vms)

$$Vms = 17.647 \times Ym \ (Vmf - Vmi) \ \frac{(Po + \frac{\Delta Pm}{13.6})}{Tm}$$

$$Vms = (17.647)(0.991)(147.68)\left(\frac{30.05}{540}\right)$$

$$= \boxed{143.72}$$

2. Standard Cubic Feet Per Hour (SCFH)

$$SCFH = \frac{Vms}{HR} = \boxed{143.72}$$

3. Gas Flow Rate

$$Qs = \frac{Vms}{\theta}$$

BONNER ANALYTICAL TESTING COMPANY
RT. 14, BOX 509
HATTIESBURG, MS 39402
(601) 264-2854

EPA METHOD 25

VOLATILE ORGANIC CARBON

Facility Hercules, Inc. - Hattiesburg, MS

Location 071 - Flaking Belt Vapor Water Scrubber

Date 5/18/88 Operators JS/JP/MSB

Run # 2
Bag # 002
Trap # 002

Barometric Press (in Hg) 30.02

Ambient Temp. (F) 74

Wet Bulb 72
Dry Bulb 80
% Moisture <1

Sample Train Leak Rate (<1 cc/min) <1

Pretest Vacuum 30 in H_2O 0.30 in/min Leakrate (<1.6 in/min)

Post Test Vacuum 30 in H_2O 0.30 in/min Leakrate (<1.6 in/min)

DRY GAS METER

Meter # 336323

Meter Coef: 0.991

Date Calibrated 5/16/88

	Source Volumetric Flow Data				
	Time	Mass Flow		Dry Gas Meter	Static
	Clock/Sample	Meter Reading	Cubic feet	Temp (F)	Press (in H_2O)
I	0950	100 cc/min	214.00	83	0.3
1	1000	100 cc/min	240.90	86	0.3
2	1010	100 cc/min	264.62	87	0.3
3	1020	100 cc/min	289.40	87	0.3
4	1030	100 cc/min	313.90	85	0.3
5	1040	100 cc/min	337.40	87	0.3
6	1050	100 cc/min	361.82	87	0.3
7					
8					
9					
10					
11					
12					
Total	60		147.82		
Average		100 cc/min		86 (546R)	0.3 (30.04)

BONNER ANALYTICAL TESTING COMPANY
RT. 14, BOX 509
HATTIESBURG, MS 39402
(601) 264-2854

BYRON METHOD 25 Lab Data Sheet

FACILITY Hercules, Inc.

LOCATION 071 FBWS RUN # 2

Bag I.D. 002
Volume Collected 6.000 Volume Analyzed 6.000
if changed, why

Trap I.D. 002
Volume Collected 6.000 Furnout Volume

BAG ANALYSIS

Date 5/30/88 Analyst JP

				Average
NMHC	16	16	14	15
CO	< 3	< 3	< 3	< 3
CO_2	629	606	608	614
CH_4	< 3	< 3	< 3	< 3

TRAP ANALYSIS

Date 5/25/88 Temperature 300 C Analyst JP

				Average
NMHC	<3	<3	<3	<3
CO	<3	<3	<3	<3
CO_2	905	891	892	896
CH_4	<3	<3	<3	<3

General Comments

VOC = volatile organic carbon - This is the sum of the VOC collected in the trap plus any VOC that passes through the trap into the bag. In the analysis the bag portion is the BAG NMHC (nonmethane hydrocarbon); the trap is burned out and all the VOC converted to carbon dioxide prior to analysis thus the trap portion is the TRAP CO_2.

$$VOC_+ \text{ lb/hr} = \frac{(VOC\ BAG_{ave} + VOC\ TRAP_{ave})\ SCFH}{32 \times 10^6}$$

$$VOC_+ \text{ lb/hr} = \frac{(614 \text{ bag} + 896 \text{ trap})\ 142.22\ SCFH}{32 \times 10^6}$$

$$VOC_+ = \boxed{6.71 \times 10^{-3}\ \text{lb/hr}}$$

BONNER ANALYTICAL TESTING COMPANY
RT. 14, BOX 509
HATTIESBURG, MS 39401
(601) 264-2854

Facility Hercules, Inc.

Location 071 - Flaking Belt Vapor Water Scrubber

Run # 2

1. Standard Cubic Feet Per Run (Vms)

$$Vms = 17.647 \times Ym \ (Vmf - Vmi) \ \frac{(Pb + \frac{\Delta Pm}{13.6})}{Tm}$$

$$Vms = (17.647)(0.991)(147.82)\frac{(30.04)}{546}$$

$$= \boxed{142.22}$$

2. Standard Cubic Feet Per Hour (SCFH)

$$SCFH = \frac{Vms}{HR} = \boxed{142.22}$$

3. Gas Flow Rate

$$Qs = \frac{Vms}{\theta}$$

BONNER ANALYTICAL TESTING COMPANY
RT. 14, BOX 509
HATTIESBURG, MS 39402
(601) 264-2854

EPA METHOD 25

VOLATILE ORGANIC CARBON

Facility Hercules, Inc. - Hattiesburg, MS

Location 071 - Flaking Belt Vapor Water Scrubber

Date 5/18/88 Operators JP/MSB

Run # 3
Bag # 003
Trap # 003

Barometric Press (in Hg) 30.02

Ambient Temp. (F) 78

Wet Bulb 79
Dry Bulb 90
% Moisture <1

Sample Train Leak Rate (<1 cc/min) <1

Pretest Vacuum 30 in H_2O 0.25 in/min Leakrate (<1.6 in/min)

Post Test Vacuum 30 in H_2O 0.25 in/min Leakrate (<1.6 in/min)

DRY GAS METER

Meter # 336323

Meter Coef: 0.991

Date Calibrated 5/16/88

	Time	Mass Flow	Source Volumetric Flow Data:		
	Clock/Sample	Meter Reading	Cubic feet	Dry Gas Meter Temp (F)	Static Press (in H_2O)
I	1055	105 cc/min	374.00	89	0.3
1	1105	105 cc/min	398.90	90	0.3
2	1115	105 cc/min	422.90	90	0.3
3	1125	105 cc/min	450.80	90	0.3
4	1135	105 cc/min	470.45	89	0.3
5	1145	105 cc/min	491.30	90	0.3
6	1155	105 cc/min	519.75	90	0.3
7					
8					
9					
10					
11					
12					
Total	60		144.75		
Average		105 cc/min		90 (550R)	0.3 (30.04)

BONNER ANALYTICAL TESTING COMPANY
RT. 14, BOX 509
HATTIESBURG, MS 39402
(601) 264-2854

BYRON METHOD 25 Lab Data Sheet

FACILITY Hercules, Inc.

LOCATION 071 - Flaking Belt W.S. RUN # 3

Bag I.D. 003
Volume Collected 6.300 Volume Analyzed 6.300
if changed, why

Trap I.D. 003
Volume Collected 6.300 Burnout Volume 5.000

BAG ANALYSIS

Date 5/30/88 Analyst JP/MSB

				Average
NMHC	12	13	12	12
CO	< 3	< 3	< 3	< 3
CO_2	730	707	720	719
CH_4	< 3	< 3	< 3	< 3

TRAP ANALYSIS

Date 5/25/88 Temperature 300 C Analyst JP/MSB

				Average
NMHC	<3	<3	<3	<3
CO	<3	<3	<3	<3
CO_2	255	249	249	251
CH_4	<3	<3	<3	<3

General Comments

VOC = volatile organic carbon - This is the sum of the VOC collected in the trap plus any VOC that passes through the trap into the bag. In the analysis the bag portion is the BAG NMHC (nonmethane hydrocarbon); the trap is burned out and all the VOC converted to carbon dioxide prior to analysis thus the trap portion is the TRAP CO_2.

$$VOC_+ \text{ lb/hr} = \frac{(VOC\ BAG_{avg} + VOC\ TRAP_{avg})\ SCFH}{32 \times 10^6}$$

$$VOC_+ \text{ lb/hr} = \frac{(719 \text{ bag} + 251 \text{ trap})\ 138.20\ SCFH}{32 \times 10^6}$$

$$VOC_+ = 4.19 \times 10^{-3} \text{ lb/hr}$$

BONNER ANALYTICAL TESTING COMPANY
RT. 14, BOX 509
HATTIESBURG, MS 39401
(601) 264-2854

Facility Hercules, Inc.

Location 071 - Flaking Belt Vapor Water Scrubber

Run # 3

1. Standard Cubic Feet Per Run (Vms)

$$Vms = 17.647 \times Ym \ (Vmf - Vmi) \ \frac{(Pb + \frac{\Delta Pm}{13.6})}{Tm}$$

$$Vms = (17.647)(0.991)(144.75)\left(\frac{30.04}{550}\right)$$

$$= \boxed{138.26}$$

2. Standard Cubic Feet Per Hour (SCFH)

$$SCFH = \frac{Vms}{HR} = \boxed{138.26}$$

3. Gas Flow Rate

$$Qs = \frac{Vms}{\theta}$$

BONNER ANALYTICAL TESTING COMPANY
RT. 14, BOX 509
HATTIESBURG, MS 39402
(601) 264-2854

EPA METHOD 25

VOLATILE ORGANIC CARBON

Facility Hercules Inc

Location 071 Flaking Belt Vapor Water Scrubber

Date 5/18/88 Operators JP/MSB

Run # 1
Bag # 001
Trap # ~~002~~ 001

Barometric Press (in Hg) 30.02

Ambient Temp. (F) 74

Wet Bulb 72
Dry Bulb 80
% Moisture <1

Sample Train Leak Rate (<1 cc/min) <1

Pretest Vacuum 30 in H_2O 0.35 in/min Leakrate (<1.6 in/min)

Post Test Vacuum 30 in H_2O 0.35 in/min Leakrate (<1.6 in/min)

DRY GAS METER

Meter # 336323

Meter Coef: 0.991

Date Calibrated 5/16/88

	Time Clock/Sample	Mass Flow Meter Reading	Source Volumetric Flow Data: Cubic feet	Dry Gas Meter Temp(F)	Static Press (in H_2O)
I	0845	108 cc/min	55.32	78	0.3
1	0855	108	79.32	79	0.3
2	~~0850~~ 0905	108	104.25	79	0.3
3	0915	108	130.25	80	0.3
4	0925	108	156.05	80	0.3
5	0935	108	180.25	80	0.3
6	0945	108	203.00	81	0.3
7					
8					
9					
10					
11					
12					
Total	60		147.68		
Average		108 cc/min		80 (540R)	0.3 (30.05)

BONNER ANALYTICAL TESTING COMPANY
RT. 14, BOX 509
HATTIESBURG, MS 39402
(601) 264-2854

BYRON METHOD 25 Lab Data Sheet

FACILITY Hercules

LOCATION 071 RUN 1

Bag I.D. 001
Volume Collected 6.480 Volume Analyzed 6-480
if changed, why

Trap I.D. 001
Volume Collected 6.480 Burnout Volume

BAG ANALYSIS Date 5/30/88 Analyst JP

				Average
NMHC	<3	<3	<3	<3
CO	<3	<3	<3	<3
CO_2	552	541	542	545
CH_4	<3	<3	<3	<3

TRAP ANALYSIS Date 5/25/88 Temperature 300 Analyst JP

				Average
NMHC	<3	<3	<3	<3
CO	<3	<3	<3	<3
CO_2	373	366	361	367
CH_4	<3	<3	<3	<3

General Comments

VOC = volatile organic carbon - This is the sum of the VOC collected in the trap plus any VOC that passes through the trap into the bag. In the analysis the bag portion is the BAG NMHC (nonmethane hydrocarbon); the trap is burned out and all the VOC converted to carbon dioxide prior to analysis thus the trap portion is the TRAP CO_2.

$$VOC_t \text{ lb/hr} = \frac{(VOC\ BAG_{ave} + VOC\ TRAP_{ave})\ SCFH}{32 \times 10^6}$$

$$VOC_t \text{ lb/hr} = \frac{(0 \text{ bag} + 367 \text{ trap})\ 143.72\ SCFH}{32 \times 10^6}$$

$$VOC_t = \frac{}{1.1.4 \times 10^{-3}}$$

BUNNER ANALYTICAL TESTING COMPANY
RT. 14, BOX 509
HATTIESBURG, MS 39401
(601) 264-2854

Facility Hercules

Location 071 Flaking Batt Vapor Water Scrubber

Run 1

1. Standard Cubic Feet Per Run (Vms)

$$Vms = 17.647 \times Ym\ (Vmf - Vmi)\ \frac{(Pb + \frac{DPm}{13.6})}{Tm}$$

$$Vms = \left(17.647\right)\left(0.991\right)\left(147.68\right)\left(\frac{30.05}{540}\right)$$

$$= \boxed{143.72}$$

2. Standard Cubic Feet Per Hour (SCFH)

$$SCFH = \frac{Vms}{HR} \quad \boxed{143.72}$$

3. Gas Flow Rate

$$Qs = \frac{Vms}{J}$$

BONNER ANALYTICAL TESTING COMPANY
RT. 14, BOX 509
HATTIESBURG, MS 39402
(601) 264-2854

EPA METHOD 25

VOLATILE ORGANIC CARBON

Facility Hercules

Location 071 Flaking Belt Water Scrubber

Date 5/18/88 Operators JS/JP/MSB

Run # 2
Bag # 002
Trap # 002

Barometric Press (in Hg) 30.02

Ambient Temp. (F) 74

Wet Bulb 72
Dry Bulb 80
% Moisture <1

Sample Train Leak Rate (<1 cc/min) <1

Pretest Vacuum 30 in H_2O 0.30 in/min Leakrate (<1.6 in/min)

Post Test Vacuum 30 in H_2O 0.30 in/min Leakrate (<1.6 in/min)

DRY GAS METER

Meter # 336323

Meter Coef: 0.991

Date Calibrated 5/16/88

	Time Clock/Sample	Mass Flow Meter Reading	Source Volumetric Flow Data: Cubic feet	Dry Gas Meter Temp(F)	Static Press (in H_2O)
I	0950	100 cc/min	214.00	83	0.3
1	1000	100	240.90	86	0.3
2	1010	100	264.62	87	0.3
3	1020	100	289.40	87	0.3
4	1030	100	313.90	85	0.3
5	1040	100	337.40	87	0.3
6	1050	100	361.82	87	0.3
7					
8					
9					
10					
11					
12					
Total	60		147.82		
Average		100 cc/min		86 (546R)	0.3 (30.04)

BONNER ANALYTICAL TESTING COMPANY
RT. 14, BOX 509
HATTIESBURG, MS 39402
(601) 264-2854

BYRON METHOD 25 Lab Data Sheet

FACILITY Hercules

LOCATION 071 FBWS RUN 2

Bag I.D. 002
Volume Collected 6.000 Volume Analyzed 6.000
if changed, why

Trap I.D. 002
Volume Collected 6.000 Burnout Volume 6.000

BAG ANALYSIS Date 5/30/88 Analyst JF

				Average
NMHC	16	16	14	15
CO	<3	<3	<3	<3
CO_2	629	606	608	614
CH_4	<3	<3	<3	<3

TRAP ANALYSIS Date 5/25/88 Temperature 300°C Analyst JF

				Average
NMHC	<3	<3	<3	<3
CO	<3	<3	<3	<3
CO_2	905	891	892	896
CH_4	<3	<3	<3	<3

General Comments

VOC = volatile organic carbon - This is the sum of the VOC collected in the trap plus any VOC that passes through the trap into the bag. In the analysis the bag portion is the BAG NMHC (nonmethane hydrocarbon); the trap is burned out and all the VOC converted to carbon dioxide prior to analysis thus the trap portion is the TRAP CO_2.

$$VOC_t \text{ lb/hr} = \frac{(VOC\ BAG_{ave} + VOC\ TRAP_{ave})\ SCFH}{32 \times 10^6}$$

$$VOC_t \text{ lb/hr} = \frac{(614 \text{ bag} + 896 \text{ trap})\ 142.22 \text{ SCFH}}{32 \times 10^6}$$

$$VOC_t = 6.71 * 10^{-3} \text{ lb/hr}$$

BONNER ANALYTICAL TESTING COMPANY
RT. 14, BOX 509
HATTIESBURG, MS 39401
(601) 264-2854

Facility Herald's

Location 071

Run 5/18/88 2

1. Standard Cubic Feet Per Run (Vms)

$$Vms = 17.647 \times Ym \ (Vmf - Vmi) \ \frac{(Pb + \frac{DPm}{13.6})}{Tm}$$

$$Vms = 17.647 * 0.991 * 147.82 \ \frac{30.04}{546}$$

$$= \boxed{142.22}$$

2. Standard Cubic Feet Per Hour (SCFH)

$$SCFH = \frac{Vms}{HR} \quad \boxed{142.22}$$

3. Gas Flow Rate

$$Qs = \frac{Vms}{J}$$

BONNER ANALYTICAL TESTING COMPANY
RT. 14, BOX 509
HATTIESBURG, MS 39402
(601) 264-2854

EPA METHOD 25

VOLATILE ORGANIC CARBON

Facility Herculon

Location 071 Flaking Belt Water Scrubber

Date 5/18/88 Operators JP/MSB

Run # 3
Bag # 003
Trap # 003

Barometric Press (in Hg) 30.02

Ambient Temp. (F) 78

Wet Bulb 79
Dry Bulb 90
% Moisture <1

Sample Train Leak Rate ((1 cc/min) <1

Pretest Vacuum 30 in H_2O 0.25 in/min Leakrate ((1.6 in/min)

Post Test Vacuum 30 in H_2O 0.25 in/min Leakrate ((1.6 in/min)

DRY GAS METER

Meter # 336323

Meter Coef: 0.991

Date Calibrated 5/16/88

	Source Volumetric Flow Data				
	Time	Mass Flow		Dry Gas Meter	Static
	Clock/Sample	Meter Reading	Cubic feet	Temp(F)	Press (in H_2O)
I	1055	105 cc/min	374.00	89	0.3
1	1105	105	398.90	90	0.3
2	1115	105	422.90	90	0.3
3	1125	105	450.80	90	0.3
4	1135	105	470.45	89	0.3
5	1145	105	491.30	90	0.3
6	1155	105	518.75	90	0.3
7					
8					
9					
10					
11					
12					
Total	(60)		144.75		
Average		105 cc/min		90 (550R)	0.3 (30.04)

BONNER ANALYTICAL TESTING COMPANY
RT. 14, BOX 509
HATTIESBURG, MS 39402
(601) 264-2854

BYRON METHOD 25 Lab Data Sheet

FACILITY Hercules Inc

LOCATION 071 Flaking Belt W.S. RUN 3

Bag I.D. 003
Volume Collected 6.300 Volume Analyzed 6.300
if changed, why

Trap I.D. 003
Volume Collected 6.300 Burnout Volume 5.000

BAG ANALYSIS Date 5/30/88 Analyst JP/MSB

				Average
NMHC	12	13	12	12
CO	<3	<3	<3	<3
CO_2	730	707	720	719
CH_4	<3	<3	<3	<3

TRAP ANALYSIS Date 5/25/88 Temperature 300 Analyst JP/MSB

				Average
NMHC	<3	0	<3	0
CO	<3	<3	<3	<3
CO_2	255	249	249	251
CH_4	<3	0	<3	<3

General Comments

VOC = volatile organic carbon - This is the sum of the VOC collected in the trap plus any VOC that passes through the trap into the bag. In the analysis the bag portion is the BAG NMHC (nonmethane hydrocarbon); the trap is burned out and all the VOC converted to carbon dioxide prior to analysis thus the trap portion is the TRAP CO_2.

$$VOC_t \text{ lb/hr} = \frac{(VOC\ BAG_{ave} + VOC\ TRAP_{ave})\ SCFH}{32 \times 10^6}$$

$$VOC_t \text{ lb/hr} = \frac{(719 \text{ bag} + 251 \text{ trap})\ 138.26 \text{ SCFH}}{32 \times 10^6}$$

VOC_t = 4.19 x 10^{-3}

BONNER ANALYTICAL TESTING COMPANY
RT. 14, BOX 509
HATTIESBURG, MS 39401
(601) 264-2854

Facility Hercules

Location 021

Run 3

1. Standard Cubic Feet Per Run (Vms)

$$Vms = 17.647 \times Ym \, (Vmf - Vmi) \, \frac{(Pb + \frac{DPm}{13.6})}{Tm}$$

$$Vms = 17.647 * 0.991 * 144.75 * \frac{30.04}{550}$$

$$= \boxed{138.26}$$

2. Standard Cubic Feet Per Hour (SCFH)

$$SCFH = \frac{Vms}{HR} \quad \boxed{138.26}$$

3. Gas Flow Rate

$$Qs = \frac{Vms}{J}$$

MISSISSIPPI DEPARTMENT OF NATURAL RESOURCES
Bureau of Pollution Control
P.O. Box 10385
Jackson, Mississippi 39289-0385
(601) 961-5171

MEMORANDUM

TO: File

FROM: Jesse Thompson, Jr.

SUBJECT: Stack Test Review

DATE: June 2, 1989

Facility No. 110-0800-00001-072

I have reviewed the test data submitted for the Baghouse Stack at Hercules in Hattiesburg. The baghouse was tested for TSP Utilizing Method 5. The review calculations did not reveal any problems. The review printout is attached. I recommend that this test be accepted.

JT:dfj

HER-072-1

Plant	Hercules, Inc.
Location	Hattiesburg, #072
Operator	DJM/JMW
Date	May 26, 1988
Run no.	#1
Sample box no	001
Meter box no	001
Meter H@	1.83
C factor	1.125
Pilot tube coefficient, Cp	0.84

Ambient temperature	78 F
Barometric pressure	30.11
Assumed moisture,%	2%
Probe length,(ft)	6
Nozzle identification no	.3675
Average calibrated nozzle diameter, cm (in)	.3675
Probe heater setting	0
Leak. rate m³/min,(cfm)	0.001
Probe liner material	SS
Static pressure,mm.Hg(in.Hg)	30.111
Filter No.	

SCHEMATIC OF STACK CROSS SECTION

Start Time: 1045 hrs

End Time: 1148 hrs

T.P #	Sample time (min)	Vacuum (In. Hg)	Stack temp. (F) (Ts)	Veloc-ity head (in) (p)	Pres-sure differ across orific meter	Gas sample volume (cf)	Gas Sample temp. @ dry gas meter Inlet (F)	Gas Sample temp. @ dry gas meter Outlet (F)	Filter holder temp. (F)	Temp.of gas leav-ing con-denser or last im-pinger (F)
Initial						789.060				
1	7 min	3.0	78	.06	1.3	793.61	80	76	Amb	< 65
2	7 min	3.0	80	.08	1.7	797.75	82	77	Amb	< 65
3	7 min	5.0	81	.10	2.2	803.04	99	80	Amb	< 65
4	7 min	3.0	80	.06	1.3	807.50	109	85	Amb	< 65
5	7 min	3.5	81	.08	1.7	812.14	111	87	Amb	< 65
6	7 min	3.5	81	.08	1.7	816.80	114	91	Amb	< 65
7	7 min	3.0	81	.07	1.5	821.46	116	93	Amb	< 65
8	7 min	4.0	82	.09	1.95	826.41	117	95	Amb	< 65
9	7 min	4.0	83	.09	1.95	831.436	124	98	Amb	< 65
T.	63		727	.71	15.3	42.376	952	782		
Avg.			80.77	.078	1.7		105.77	86.88		

HER-072-1

BONNER ANALYTICAL TESTING COMPANY
RT. 13, BOX 85
HATTIESBURG, MS. 39401
(601)264-2854

NOMOGRAPH DATA

PLANT Hercules, Inc.

DATE 5/26/88

SAMPLING LOCATION Dracco Baghouse

RUN #1

CALIBRATED PRESSURE DIFFERENTIAL ACROSS ORIFICE, in. H_2O	H @	1.83
AVERAGE METER TEMPERATURE (80 + 30 F) F	T_m avg.	103 F
PERCENT MOISTURE IN GAS STREAM BY VOLUME	B_{wo}	2%
BAROMETRIC PRESSURE AT METER, in. Hg	P_m	30.110
STATIC PRESSURE IN STACK, in. Hg (P_m 29.89 + (.073)(.11) +0.073 x STACK GUAGE PRESSURE in in. H_2O 2	P_s	30.111
RATIO OF STATIC PRESSURE TO METER PRESSURE	$s P_m$	1.00
AVERAGE STACK TEMPERATURE, F	T_s avg.	78
AVERAGE VELOCITY HEAD, in. H_2O 2	p avg.	.07
MAXIMUM VELOCITY HEAD, in. H_2O 2	p avg.	.10
C FACTOR	1.125	
CALCULATED NOZZLE DIAMRTER, in.	.388	
ACTUAL NOZZLE DIAMETER, in.	.3675	
REFERENCE p, in. H_2O 2	.086	

HER-072-1

1. Summary of Field Data

Run #1

1. Ambient Temperature (F): 78 F
2. Weather: Overcast
3. Stack Height (ft): 30 ft.
4. Stack Area (ft): 1.563 ft.
5. Meter H@: 1.83
6. Pitot Correction Factor: 0.84
7. Nomograph C_f : 1.12
8. Probe Heater Setting: NA
9. Filter Box Temperature (F): Ambient
10. Last Impinger Temperature (F): < 65
11. Sample Time/Point: 7 min.
12. Points/Traverse: 9 Total
13. Probe Length: 6 ft.
14. Nozzle Diameter: 0.367
15. V : 42.376
16. Pbar: 30.11
17. Pavg: 0.078
18. $Pavg^{.5}$: 0.279
19. Havg: 1.70
20. Tsavg (F): 81
21. Tsavg (R): 541
22. Tmlavg (F): 106
23. TmOavg (F): 87
24. Tmavg (F): 97
25. Tmavg (R): 557

HER-072-1

26. Pm: 30.11

27. Ps: 30.11

28. V_{lc} : 10.09 ml

3. Impinger Data

	1st	2nd	3rd	4th
Final	100	100	0	210.09 g
Initial	100	100	0	200 g
Difference	0	0	0	10.09
			Total difference	10.09

4. Fyrite Data

Run #1

% Carbon Dioxide = 0%

% Oxygen = 21.9%

% Carbon Monoxide =

Excess Air (ea) = $(\%O_2) - 0.5(\%CO)/0.264(\%N_2) - (\%o) + 0.5(\%CO)$

=

$M_d - 0.44(\%CO) + 0.32(O) + 0.28(\%N + \%CO)$

$= (0.44)(0.0) + (0.32)(21.9) + (0.28)(78.1)$

$= 28.88$

$M_s = M_d(1-B_{wo}) + 18(B_{wo})$

$= 28.88(0.99) + 18(0.01)$

$M_s = 28.76$

HER-072-1

5. Filter Data

Run #1

	Filter	H_2O Fraction	Acetone Fraction	Acetone Blank	Filter Blank
Final wt	0.7220		85.1906	85.3740	0.6989
Initial wt	0.6993		85.1795	85.3728	0.6989
Difference	0.0227		0.0111	0.0012	- 0 -
Corr.	- 0 -		+ 0.0012		
Sample wt	0.0227		0.0123		

Total weight | 0.0350

HER-072-1

Run No. #1

1. Average Dry Gas Meter Temperature: (f)
   Have =
   Pave =

2. Dry Gas Volume:
$$Vmstd = 17.64 * Vm * Y \left(\frac{Pbar + H/13.6}{Tm}\right) = 17.64 \times 42.376 \times 1.05 \times \left(\frac{30.24}{557}\right)$$
$$= \boxed{42.605}$$

3. Volume of water Vapor:
$$Vwstd = 0.04707\ ft3/ml * Vlc = 0.04707 \times 10.09$$
$$= \boxed{0.475}$$

4. Moisture Content:
$$Bwo = \frac{Vwstd}{Vwstd + Vmstd} = \frac{0.475}{0.475 + 42.605}$$
$$= \boxed{0.011}$$

5. Concentration in gr/SCF:
$$C's = (0.0154\ gr/mg)\ (Mn/Vmstd) = 0.0154 \times \frac{35}{52.605}$$
$$= \boxed{0.0127}$$

6. Concentration in lb/ft3:
$$Cs = 2.205 \times 10\text{-}6\ (Mn/Vmstd) = 2.205 \times 10^{-6} \times \frac{35}{42.605}$$
$$= \boxed{1.811 \times 10^{-6}}$$

7. Stack Gas Velocity:
$$Vsavg. = (85.49)(Cp)(Pavg)\left(\frac{Ts\ avg}{PsMs}\right)^{.5} = (85.49)(0.84)(0.279)\left(\frac{541}{30.11 \times 28.76}\right)^{.5}$$
$$= \boxed{15.836}$$

8. Stack Gas Volumetric Flowrate:
$$Qs = 3600(1-Bws)(Vs)(A)\frac{Tstd}{Tsavg}\frac{Ps}{Pstd} = (3600)(0.99)(15.836)(1.563)\left(\frac{(528)(30.11)}{(550)(29.92)}\right)$$
$$= \boxed{85224}$$

9. Pollutant Mass Emission Rate, lb/hr:
$$PMRc = (Qs)\ (Cs) = 85224 \times 1.811 \times 10^{-6}$$
$$= \boxed{0.154}$$

10. Percent Isokinetic:
$$I = (0.09450)\frac{Ts\ Vmstd}{PsVsAn\ 0\ (1-Bws)} = \frac{(0.0945)(550)(42.605)}{(30.11)(15.836)(0.000734)(63)(0.99)}$$
$$I = \boxed{101.4\ \%}$$

HER-072-2

Plant Hercules, Inc.	Ambient temperature 90 F
Location Hattiesburg, #072	Barometric pressure 30.11
Operator DJM/JMW	Assumed moisture,% 2%
Date May 26, 1988	Probe length,(ft) 6
Run no. #2	Nozzle identification no .3675
Sample box no 002	Average calibrated nozzle diameter, cm (in) .3675
Meter box no 001	Probe heater setting 0
Meter H@ 1.83	Leak rate m³/min,(cfm) 0
C factor 1.14	Probe liner material SS
Pilot tube coefficient,Cp 0.84	Static pressure,mm.Hg(in.Hg) 30.111
	Filter No.

SCHEMATIC OF STACK
CROSS SECTION

Start Time: 1313 hrs

End Time: 1416 hrs

T.P #	Sample time (min)	Vacuum (in. Hg)	Stack temp. (F) (Ts)	Velocity head (in) (p)	Pressure differ across orific meter	Gas sample volume (cf)	Gas Sample temp. @ dry gas meter Inlet (F)	Gas Sample temp. @ dry gas meter Outlet (F)	Filter holder temp. (F)	Temp.of gas leaving condenser or last impinger (F)
Initial						831.574				
1	7 min	1.5	90	.08	1.65	836.25	84	83	Amb	< 65
2	7 min	2.0	90	.10	2.05	841.45	94	84	Amb	< 65
3	7 min	2.0	90	.10	2.05	846.77	105	86	Amb	< 65
4	7 min	1.5	89	.07	1.45	851.61	111	88	Amb	< 65
5	7 min	2.0	90	.10	2.05	856.76	113	90	Amb	< 65
6	7 min	2.0	90	.10	2.05	862.13	118	93	Amb	< 65
7	7 min	1.5	89	.08	1.65	867.02	120	95	Amb	< 65
8	7 min	2.0	90	.10	2.05	872.28	121	97	Amb	< 65
9	7 min	2,0	90	.09	1.85	877.680	122	100	Amb	< 65
T.	63		808	.82		46.106	988	816		
Avg.			89.77	0.0911	1.87		109.77	90.66		

HER-072-2

BONNER ANALYTICAL TESTING COMPANY
RT. 13, BOX 85
HATTIESBURG, MS. 39401
(601)264-2854

NOMOGRAPH DATA

PLANT Hercules, Inc.

DATE 5/26/88

SAMPLING LOCATION Dracco Baghouse

RUN #2

CALIBRATED PRESSURE DIFFERENTIAL ACROSS ORIFICE, in. H_2O	H @	1.83
AVERAGE METER TEMPERATURE (80 + 30 F) F	T_m avg.	113 F
PERCENT MOISTURE IN GAS STREAM BY VOLUME	B_{wo}	2%
BAROMETRIC PRESSURE AT METER, in. Hg	P_m	30.11
STATIC PRESSURE IN STACK, in. Hg (P_m 29.89 + (.073)(.11) +0.073 x STACK GUAGE PRESSURE in in. H_2O 2	P_s	30.11
RATIO OF STATIC PRESSURE TO METER PRESSURE	$s P_m$	1.00
AVERAGE STACK TEMPERATURE, F	T_s avg.	90
AVERAGE VELOCITY HEAD, in. H_2O 2	p avg.	.08
MAXIMUM VELOCITY HEAD, in. H_2O 2	p avg.	.10
C FACTOR	1.14	
CALCULATED NOZZLE DIAMRTER, in.	.375	
ACTUAL NOZZLE DIAMETER, in.	.3675	
REFERENCE p, in. H_2O 2	.09	

HER-072-2

1. Summary of Field Data

Run #2

1. Ambient Temperature (F): 90
2. Weather: Overcast
3. Stack Height (ft): 30 ft.
4. Stack Area (ft): 1.563 ft.
5. Meter H@: 1.83
6. Pitot Correction Factor: 0.84
7. Nomograph C_f : 1.12
8. Probe Heater Setting: NA
9. Filter Box Temperature (F): Ambient
10. Last Impinger Temperature (F): < 65
11. Sample Time/Point: 7 min.
12. Points/Traverse: 9 Total
13. Probe Length: 6 ft.
14. Nozzle Diameter: 0.367
15. V : 46.106
16. Pbar: 30.11
17. Pavg: 0.091
18. $Pavg^{.5}$: 0.302
19. Havg: 1.87
20. Tsavg (F): 90
21. Tsavg (R): 550
22. Tmlavg (F): 110
23. TmOavg (F): 91
24. Tmavg (F): 100
25. Tmavg (R): 560

HER-072-2

26. Pm: 30.11

27. Ps: 30.11

28. V_{lc} : 16.12 ml

3. Impinger Data

	1st	2nd	3rd	4th
Final	106	100	0	210.12 g
Initial	100	100	0	200 g
Difference	6	0	0	10.12
			Total difference	16.12

4. Fyrite Data

Run #2

% Carbon Dioxide = 0%

% Oxygen = 21.9%

% Carbon Monoxide =

Excess Air (ea) = $(\%O_2) - 0.5\,(\%CO)/0.264\,(\%N_2) - (\%o) + 0.5\,(\%CO)$

=

$M_d - 0.44\,(\%CO) + 0.32\,(O) + 0.28\,(\%N + \%CO)$

$= (0.44)(0.0) + (0.32)(21.9) + (0.28)(78.1)$

$= 28.88$

$M_s = M_d\,(1-B_{wo}) + 18(B_{wo})$

$= 28.88(0.984) + 18(0.016)$

$M_s = 28.70$

HER-072-2

5. Filter Data

Run #2

	Filter	H O Fraction	Acetone Fraction	Acetone Blank	Filter Blank
Final wt	0.7210		84.8501	85.3740	0.6989
Initial wt	0.6994		84.8312	85.3728	0.6989
Difference	0.0216		0.0189	0.0012	- 0 -
Corr.	- 0 -		+ 0.0012		
Sample wt	0.0216		0.0201		

Total weight 0.0417

HER-072-2

Run No. #2

1. Average Dry Gas Meter Temperature: (f)
   Have =
   Pave =

2. Dry Gas Volume: $Vmstd = 17.64 * Vm * Y \left(\frac{Pbar + H/13.6}{Tm}\right) = 17.64 \times 46.106 \times 1.05 \times \left(\frac{30.25}{560}\right)$

   = | 46.130 |

3. Volume of water Vapor:
   $Vwstd = 0.04707\ ft3/ml * Vlc = 0.04707 \times 16.12$

   = | 0.758 |

4. Moisture Content:
   $Bwo = \frac{Vwstd}{Vwstd + Vmstd} = \frac{0.758}{0.758 + 46.130}$

   = | 0.016 |

5. Concentration in gr/SCF:
   $C's = (0.0154\ gr/mg)\ (Mn/Vmstd) = 0.0154 \times \frac{41.7}{46.130}$

   = | 0.0139 |

6. Concentration in lb/ft3:
   $Cs = 2.205 \times 10\text{-}6\ (Mn/Vmstd) = 2.205 \times 10^{-6} \times \frac{41.7}{46.130}$

   = | 1.99 X 10^{-6} |

7. Stack Gas Velocity:
   $Vsavg. = (85.49)(Cp)(Pavg)\left(\frac{Ts\ avg}{PsMs}\right)^{.5} = (85.49)(0.84)(0.302)\left(\frac{550}{30.11 \times 28.70}\right)^{.5}$

   = | 17.302 |

8. Stack Gas Volumetric Flowrate:
   $Qs = 3600(1-Bws)(Vs)(A)\frac{Tstd}{Tsavg}\frac{Ps}{Pstd} = (3600)(0.984)(17.302)(1.563)\left(\frac{(528)(30.11)}{(550)(29.92)}\right)$

   =| 92547 |

9. Pollutant Mass Emission Rate, lb/hr:
   $PMRc = (Qs)\ (Cs) = 92547 \times 1.99 \times 10^{-6}$

   = | 0.184 |

10. Percent Isokinetic:
    $I = (0.09450)\frac{Ts\ Vmstd}{PsVsAn\ 0\ (1-Bws)} = \frac{(0.0945)(550)(46.130)}{(30.11)(17.302)(0.000734)(63)(0.984)}$

    I = | 101 % |

HER-072-3

Plant Hercules, Inc.	Ambient temperature 85 F
Location Hattiesburg, #072	Barometric pressure 30.11
Operator DJM/JMW	Assumed moisture,% 2%
Date May 26, 1988	Probe length,(ft) 6
Run no. #3	Nozzle identification no .3675
Sample box no 001	Average calibrated nozzle diameter, cm (in) .3675
Meter box no 001	Probe heater setting 0
Meter H@ 1.83	Leak rate m³/min,(cfm) 0.001
C factor 1.14	Probe liner material SS
Pilot tube coefficient,Cp 0.84	Static pressure,mm.Hg(in.Hg) 30.111
	Filter No.

SCHEMATIC OF STACK
CROSS SECTION

Start Time: 1429 hrs

End Time: 1532 hrs

T.P #	Sample time (min)	Vacuum (in. Hg)	Stack temp. (F) (Ts)	Velocity head (in) (p)	Pressure differ across orific meter	Gas sample volume (cf)	Gas Sample temp. @ dry gas meter Inlet (F)	Gas Sample temp. @ dry gas meter Outlet (F)	Filter holder temp. (F)	Temp.of gas leaving condenser or last impinger (F)
Initial						877.742				
1	7 min	2.5	90	.07	1.45	882.34	102	96	Amb	< 65
2	7 min	3.0	90	.09	1.85	887.25	108	98	Amb	< 65
3	7 min	4.0	92	.10	2.05	892.56	115	98	Amb	< 65
4	7 min	3.0	92	.08	1.65	897.60	119	99	Amb	< 65
5	7 min	4.0	91	.10	2.05	902.95	124	101	Amb	< 65
6	7 min	4.0	92	.10	2.05	908.43	123	102	Amb	< 65
7	7 min	3.0	92	.08	1.65	913.42	126	103	Amb	< 65
8	7 min	4.0	92	.10	2.05	918.74	124	104	Amb	< 65
9	7 min	4.0	92	.10	2.05	924.213	124	104	Amb	< 65
T.	63		823	.82	16.8	46.471	1065	905		
Avg.			91	.09	1.87		118.33	100.5		

HER-072-3

BONNER ANALYTICAL TESTING COMPANY
RT. 13, BOX 85
HATTIESBURG, MS. 39401
(601)264-2854

NOMOGRAPH DATA

PLANT Hercules, Inc.

DATE 5/26/88

SAMPLING LOCATION Dracco Baghouse

RUN #3

CALIBRATED PRESSURE DIFFERENTIAL ACROSS ORIFICE, in. H_2O	H @	1.83
AVERAGE METER TEMPERATURE (80 + 30 F) F	T_m avg.	110 F
PERCENT MOISTURE IN GAS STREAM BY VOLUME	B_{wo}	2%
BAROMETRIC PRESSURE AT METER, in. Hg	P_m	30.11
STATIC PRESSURE IN STACK, in. Hg (P_m 29.89 + (.073)(.11) +0.073 x STACK GUAGE PRESSURE in in. H_2O	P_s	30.11
RATIO OF STATIC PRESSURE TO METER PRESSURE	$s P_m$	1.00
AVERAGE STACK TEMPERATURE, F	T_s avg.	90
AVERAGE VELOCITY HEAD, in. H_2O	p avg.	.09
MAXIMUM VELOCITY HEAD, in. H_2O	p avg.	.11
C FACTOR	1.14	
CALCULATED NOZZLE DIAMRTER, in.	.365	
ACTUAL NOZZLE DIAMETER, in.	.3675	
REFERENCE p, in. H_2O	.09	

HER-072-3

1. Summary of Field Data

Run #3

1. Ambient Temperature (F): 85

2. Weather: Overcast

3. Stack Height (ft): 30 ft.

4. Stack Area (ft): 1.563 ft.

5. Meter H@: 1.83

6. Pitot Correction Factor: 0.84

7. Nomograph C_f : 1.12

8. Probe Heater Setting: NA

9. Filter Box Temperature (F): Ambient

10. Last Impinger Temperature (F): < 65

11. Sample Time/Point: 7 min.

12. Points/Traverse: 9 Total

13. Probe Length: 6 ft.

14. Nozzle Diameter: 0.367

15. V : 46.471

16. Pbar: 30.11

17. Pavg: 0.09

18. $Pavg^{.5}$: 0.300

19. Havg: 1.87

20. Tsavg (F): 91

21. Tsavg (R): 551

22. Tmlavg (F): 110

23. TmOavg (F): 91

24. Tmavg (F): 100

25. Tmavg (R): 560

HER-072-3

26. Pm: 30.11

27. Ps: 30.11

28. V : 13.04 ml
lc

3. Impinger Data

	1st	2nd	3rd	4th
Final	102	100	0	210.04 g
Initial	100	100	0	200 g
Difference	2	0	1	10.04
			Total difference	13.04

4. Fyrite Data

Run #3

% Carbon Dioxide = 0%

% Oxygen = 21.9%

% Carbon Monoxide =

$$\text{Excess Air (ea)} = (\%O_2) - 0.5\,(\%CO)/0.264\,(\%N_2) - (\%O_2) + 0.5\,(\%CO)$$

=

$$M_d - 0.44\,(\%CO) + 0.32\,(O_2) + 0.28\,(\%N_2 + \%CO)$$

$$= (0.44)(0.0) + (0.32)(21.9) + (0.28)(78.1)$$
$$= 28.88$$

$$M_s = M_d(1-B_{wo}) + 18(B_{wo})$$
$$= 28.88(0.987) + 18(0.013)$$

$$M_s = 28.73$$

HER-072-3

5. Filter Data

Run #3

	Filter	H O Fraction	Acetone Fraction	Acetone Blank	Filter Blank
Final wt	0.7153		84.8618	85.3740	0.6989
Initial wt	0.7031		84.8460	85.3728	0.6989
Difference	0.0122		0.0158	0.0012	- 0 -
Corr.	- 0 -		+ 0.0012		
Sample wt	0.0122		0.0170		

Total weight	0.0292

HER-072-3

Run No. #3

1. Average Dry Gas Meter Temperature: (f)
   Have =
   Pave =

2. Dry Gas Volume:
$$Vmstd = 17.64 * Vm * Y \left(\frac{Pbar + H/13.6}{Tm}\right) = 17.64 \times 46.471 \times 1.05 \times \left(\frac{30.25}{560}\right)$$
$$= \boxed{46.495}$$

3. Volume of water Vapor:
$$Vwstd = 0.04707\ ft3/ml * Vlc = 0.04707 \times 13.04$$
$$= \boxed{0.613}$$

4. Moisture Content:
$$Bwo = \frac{Vwstd}{Vwstd + Vmstd} = \frac{0.613}{0.613 + 46.495}$$
$$= \boxed{0.013}$$

5. Concentration in gr/SCF:
$$C's = (0.0154\ gr/mg)\ (Mn/Vmstd) = 0.0154 \times \frac{29.2}{46.495}$$
$$= \boxed{0.0097}$$

6. Concentration in lb/ft3:
$$Cs = 2.205 \times 10\text{-}6\ (Mn/Vmstd) = 2.205 \times 10^{-6} \times \frac{29.2}{46.495}$$
$$= \boxed{1.38 \times 10^{-6}}$$

7. Stack Gas Velocity:
$$Vsavg.=(85.49)(Cp)(Pavg)\left(\frac{Ts\ avg}{PsMs}\right)^{.5} = (85.49)(0.84)(0.300)\left(\frac{551}{30.11 \times 28.73}\right)^{.5}$$
$$= \boxed{17.194}$$

8. Stack Gas Volumetric Flowrate:
$$Qs=3600(1-Bws)(Vs)(A)\frac{Tstd}{Tsavg}\frac{Ps}{Pstd} = (3600)(0.987)(17.194)(1.563)\left(\frac{(528)(30.11)}{(551)(29.92)}\right)$$
$$= \boxed{92082}$$

9. Pollutant Mass Emission Rate, lb/hr:
$$PMRc = (Qs)\ (Cs) = 92082 \times 1.38 \times 10^{-6}$$
$$= \boxed{0.127}$$

10. Percent Isokinetic:
$$I = (0.09450)\frac{Ts\ Vmstd}{PsVsAn\ 0\ (1-Bws)} = \frac{(0.0945)(551)(46.495)}{(30.11)(17.194)(0.000734)(63)(0.987)}$$
$$I = \boxed{102.5\ \%}$$

Plant Hercules Inc. 072
Location Hattiesburg (Dracco Baghouse)
Operator DM/JW
Date 26 May 88
Run no. ___ # 1
Sample box no 001

Meter box no 001
Meter HQ 1.83
C factor 1.125
Pilot tube coefficient, Cp 0.84

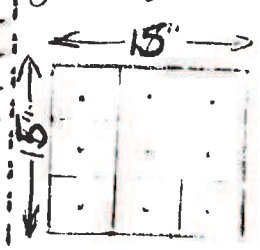

Ambient temperature 78
Barometric pressure 30.11
Assumed moisture, % 2
Probe length, (ft) 6
Nozzle identification no .3675
Average calibrated nozzle diameter, cm (in) .3675
Probe heater setting 0
Leak rate m³/min, (cfm) .001
Probe liner material SS
Static pressure, mm. Hg (in. Hg) 30.111
Filter No.

SCHEMATIC OF STACK CROSS SECTION

Start Time: 1045 hrs

End Time: 1148 hrs

T.P #	Sample time (min)	Vacuum (in. Hg)	Stack temp. (F) (Ts)	Velocity head (in) (p) ✓	Pressure differ across orific meter ✓	Gas sample volume (cf)	Gas Sample temp. @ dry gas meter Inlet (F) ✓	Outlet (F) ✓	Filter holder temp. (F)	Temp. of gas leaving condenser or last impinger (F)
Initial			✓	.06	1.3	789.060				
1	7 min	3.0	78	~~.08~~ .09	~~1.7~~	793.61	80	76	Ambient	<65
2	7 min	3.0	80	.08	1.7	797.75	82	77	Ambient	<65
3	7 min	5.0	81	.10	2.2	803.04	99	80	Ambient	<65
4	7 min	3.0	80	.06	1.3	807.50	109	85	Ambient	<65
5	7 min	3.5	81	.08	1.7	812.14	111	87	Ambient	<65
6	7 min	3.5	81	.08	1.7	816.80	114	91	Ambient	<65
7	7 min	3.0	81	.07	~~1.7~~ 1.5	821.46	116	93	Ambient	<65
8	7 min	4.0	82	.09	1.95	826.41	117	95	Ambient	<65
9	7 min	4.0	83	.09	1.95	831.436	124	98	Ambient	<65
10										
11										
12										
13										
14										
15										
16										
17										
18										
19										
20										
21										
22										
23										
24										
24										
T.	63		727	.71	15.3		952	782		
Avg			80.77	.078	1.7	42.376	105.77	86.88		

BONNER ANALYTICAL TESTING COMPANY
RT. 13, BOX 85
HATTIESBURG, MS. 39401
(601)264-2854

NOMOGRAPH DATA

PLANT Hercules Inc

DATE 26 May 88

SAMPLING LOCATION Dacco Baghouse Run #1

CALIBRATED PRESSURE DIFFERENTIAL ACROSS ORIFICE, in. H2O	H@	1.83
AVERAGE METER TEMPERATURE (AMBIENT + Δ- F), F 78 + 25	Tm avg.	103
PERCENT MOISTURE IN GAS STREAM BY VOLUME	Bwo	2
BAROMETRIC PRESSURE AT METER, in. Hg	Pm	30.110
STATIC PRESSURE IN STACK, in. Hg (Pm + 0.073 x STACK GUAGE PRESSURE in in. H2O) 30.11 + (.073)(.02)	Ps	30.111
RATIO OF STATIC PRESSURE TO METER PRESSURE	Ps Pm	1.00
AVERAGE STACK TEMPERATURE, F	Ts avg.	78
AVERAGE VELOCITY HEAD, in. H2O	P avg.	.07
MAXIMUM VELOCITY HEAD, in. H2O	P avg.	.10
A FACTOR		1.125
CALCULATED NOZZLE DIAMETER, in.		.388
ACTUAL NOZZLE DIAMETER, in.		.375
REFERENCE P, in. H2O		.086

072/1

1. Summary of Field Data

Run

1. Ambient Temperature (F): 78
2. Weather: overcast
3. Stack Height (ft): 30 ft
4. Stack Area (ft): 1.563
5. Meter H@: 1.83
6. Pitot Correction Factor: 0.84
7. Nomograph C_f : 1.12
8. Probe Heater Setting: NA
9. Filter Box Temperature (F): Ambient
10. Last Impinger Temperature (F): <65
11. Sample Time/Point: 7
12. Points/Traverse: 9
13. Probe Length: 6
14. Nozzle Diameter: 0.367
15. V_m: 42.376
16. Pbar: 30.11
17. ΔP_{avg}: 0.078
18. ΔP_{avg}^s: 0.279
19. ΔH_{avg}: 1.70
20. T_{savg} (°F): 81
21. T_{savg} (°R): 541
22. T_{mIavg} (°F): 106
23. T_{mOavg} (°F): 87
24. T_{mavg} (°F): 97
25. T_{mavg} (°R): 557

26. P_m: ~~30.07~~ 30.11

27. P_s: 30.11

28. V_{lc}: 10.09

3. Impinger Data

Final	100	100	0	210.09
Initial	100	100	0	200.00
Difference	0	0	0	10.09
			Total difference	10.09

4. Fyrite Data

Run

% Carbon Dioxide = 0%

% Oxygen = ~~2~~ 21.9%

% Carbon Monoxide =

Excess Air (ea) = $(\%O_2) - 0.5(\%CO)/0.264(\%N_2) - (\%O_2) + 0.5(\%CO)$

=

M_d = $-0.44(\%CO_2) + 0.32(O_2) + 0.28(\%N_2 + \%CO)$

= $+(0.32)(21.9) + 0.28(78.1)$

= 28.88

$M_s = M_d(1-B_{wo}) + 18(B_{wo})$

$= (28.88)(.99) + 18(.01)$

$= 28.76$

(1)

5. Filter Data

Run

	Filter	H O Fraction	Acetone Fraction	Acetone Blank	Filter Blank
Final wt	0.7220		85.1906	85.3740	0.6989
Initial wt	0.6993		85.1795	85.3728	0.6989
Difference	0.0227		0.0111	0.0012	-0-
Corr.	-0-		+0.0012		
Sample wt	0.0227		0.0123		

Total weight 0.0350

Run No. 072/1

1. Average Dry Gas Meter Temperature:
   Average Orifice Pressure Drop:
   Average ΔH:

2. Dry Gas Volume:

$$V_{mstd} = 17.64 * V_m * Y \left(\frac{P_{bar} + \Delta H/13.6}{T_m}\right) = 17.64 * 42.376 * 1.05 * \frac{30.24}{557}$$

$= \boxed{42.605}$

3. Volume of water Vapor:
   $V_{wstd} = 0.04707\ ft^3/ml * V_{lc} = 0.04707 * 10.09$

$= \boxed{0.475}$

4. Moisture Content:

$$B_{wo} = \frac{V_{wstd}}{V_{wstd} + V_{mstd}} = \frac{0.475}{(0.475 + 42.605)}$$

$= \boxed{0.011}$

5. Concentration in gr/SCF:
   $C_s = (0.0154\ gr/mg)(M_n/V_{mstd}) = 0.0154 * \frac{35}{42.605}$

$= \boxed{0.0127}$

6. Concentration in lb/ft3:
   $C_s = 2.205 * 10^{-6}\ (M_n/V_{mstd}) = 2.205 * 10^{-6} * \frac{35}{42.605}$

$= \boxed{1.811 * 10^{-6}}$

7. Stack Gas Velocity:

$$V_{savg} = (85.49)(C_p)(P_{avg})\left(\frac{T_{s\,avg}}{P_s M_s}\right)^{.5} = 85.49 * .84 * 0.279 * \left(\frac{541}{30.11 * 28.96}\right)^{.5}$$

$= \boxed{20.635}$ $\boxed{15.836}$

8. Stack Gas Volumetric Flowrate:

$$Q_s = 3600\,(1-B_{ws})\,(V_s)\,(A)\,\frac{T_{std}}{T_{savg}}\,\frac{P_s}{P_{std}} = (3600)(.99)\left(\frac{15.836}{20.035}\right)(1.563)\left(\frac{528}{550}\right)\left(\frac{30.}{29.9}\right.$$

$= \boxed{1078.24}$ $\boxed{852.24}$

9. Pollutant Mass Emission Rate, lb/hr:
   $PMR_s = (Q_s)(C_s) = 1078.24 * 1.811 * 10^{-6} * 852.24$

$= \boxed{0.195}$ $\boxed{0.154}$

10. Percent Isokinetic:

$$I = (0.09450)\,\frac{T_s\,V_{mstd}}{P_s V_s A_n\,\theta\,(1-B_{ws})} = \frac{(0.0945)(550)(42.605)}{(30.11)(20.035)(0.600734)(63)(0.99)}$$

P_s = 15.836

$= \boxed{101.4\%}$

Plant Hercules Inc. 072
Location Hollidaysburg (Tracco Baghouse)
Operator DM/JW
Date 25th May 88
Run no. # 2
Sample box no 002

Meter box no 001
Meter HQ 1.83
C factor 1.14
Pilot tube coefficient, Cp 0.84

Ambient temperature 90
Barometric pressure 30.11
Assumed moisture, % 2
Probe length, (ft) 6
Nozzle identification no .3675
Average calibrated nozzle diameter, cm (in) .3675
Probe heater setting 0
Leak rate m³/min, (cfm) 0
Probe liner material SS
Static pressure, mm. Hg (in. Hg) 30.11
Filter No.

SCHEMATIC OF STACK CROSS SECTION

Start Time: 1313 hrs

End Time: 1416 hrs

T.A #	Sample time (min)	Vacuum (in. Hg)	Stack temp. (F) (Ts)	Velocity head (in) (p)	Pressure differ across orific meter	Gas sample volume (cf)	Gas Sample temp. @ dry gas meter Inlet (F)	Gas Sample temp. @ dry gas meter Outlet (F)	Filter holder temp. (F)	Temp. of gas leaving condenser or last impinger (F)
Initial			✓	✓	1.65	831.574	✓	✓		
1	7 min	1.5	90	.08	1.70	836.25	84	83	Ambient	<65
2	7 min	2.0	90	.10	2.05	841.45	94	84	Ambient	<65
3	7 min	2.0	90	.10	2.05	846.77	105	86	Ambient	<65
4	7 min	1.5	89	.07	1.45	851.61	111	88	Ambient	<65
5	7 min	2.0	90	.10	2.05	856.76	113	90	Ambient	<65
6	7 min	2.0	90	.10	2.05	862.13	118	93	Ambient	<65
7	7 min	1.5	89	.08	1.65	867.02	120	95	Ambient	<65
8	7 min	2.0	90	.10	2.05	872.28	121	97	Ambient	<65
9	7 min	2.0	90	.09	1.85	877.680	122	100	Ambient	<65
10										
11										
12										
13										
14										
15										
16										
17										
18										
19										
20										
21										
22										
23										
24										
24										
T.	63		808	.82			988	816		
Avg			89.77	.0911	1.87	46.106	109.77	90.66		

46.106

BONNER ANALYTICAL TESTING COMPANY
RT. 13, BOX 85
HATTIESBURG, MS. 39401
(601)264-2854

NOMOGRAPH DATA

PLANT Hercules

DATE 26 May 88

SAMPLING LOCATION Dacco Baghouse Run #2

CALIBRATED PRESSURE DIFFERENTIAL ACROSS ORIFICE, in. H2O	$H_@$	1.83
AVERAGE METER TEMPERATURE (AMBIENT + Δ- F), F 88 25	$T_{m\ avg.}$	113
PERCENT MOISTURE IN GAS STREAM BY VOLUME	B_{wo}	2
BAROMETRIC PRESSURE AT METER, in. Hg	P_m	30.11
STATIC PRESSURE IN STACK, in. Hg (P_m ± 0.073 x STACK GUAGE PRESSURE in in. H_2O) 30.11 + (0.073)(0.02)	P_s	30.111
RATIO OF STATIC PRESSURE TO METER PRESSURE	$\frac{P_s}{P_m}$	1.00
AVERAGE STACK TEMPERATURE, F	$T_{s\ avg.}$	90
AVERAGE VELOCITY HEAD, in. H_2O	$P_{avg.}$	.08
MAXIMUM VELOCITY HEAD, in. H_2O	$P_{avg.}$	.10
C FACTOR		1.14
CALCULATED NOZZLE DIAMRTER, in.		.375
ACTUAL NOZZLE DIAMETER, in.		.3675
REFERENCE P_s, in. H_2O		.09

072/2

1. Summary of Field Data

Run

1. Ambient Temperature (F): 90
2. Weather: overcast
3. Stack Height (ft): 30 ft
4. Stack Area (ft): 1.563
5. Meter H@: 1.83
6. Pitot Correction Factor: 0.84
7. Nomograph C_f : 1.12
8. Probe Heater Setting: NA
9. Filter Box Temperature (F): Ambient
10. Last Impinger Temperature (F): <65
11. Sample Time/Point: 7
12. Points/Traverse: 9
13. Probe Length: 6
14. Nozzle Diameter: 0.367
15. V_m: 46.106
16. Pbar: 30.11
17. Δ Pavg: 0.091
18. Pavg : 0.302
19. Δ Havg: 1.87
20. Tsavg (°F): 90
21. Tsavg (°R): 550
22. TmIavg (°F): 110
23. TmOavg (°F): 91
24. Tmavg (°F): 100
25. Tmavg (°R): 560R

#2

26. Pm: 30.11

27. Pb: 30.11

28. V : 16.12

3. Impinger Data

Final	106 mls	100 mls	0	210.12g
Initial	100 mls	100 mls	0 mls	200.00g.
Difference	6	0	0	10.12
			Total difference	16.12

4. Fyrite Data

Run

% Carbon Dioxide = 0%

% Oxygen = 21.9%

% Carbon Monoxide =

Excess Air (ea) = $(\%O_2) - 0.5(\%CO)/0.264(\%N_2) - (\%o) + 0.5(\%CO)$

=

$M_d = 0.44(\%CO_2) + 0.32(O_2) + 0.28(\%N_2 + \%CO)$

$= (0.32)(21.9) + (0.28)(78.1)$

$= 28.88$

$M_s = M_d(1-B_{wo}) + 18(B_{wo})$

$= (28.88)(0.984) + (18)(0.016)$

$= 28.70$

(2)

5. Filter Data

Run

	Filter	H O Fraction	Acetone Fraction	Acetone Blank	Filter Blank
Final wt	0.7210		84.8501	85.3740	0.6989
Initial wt	0.6994		84.8312	85.3728	0.6989
Difference	0.0216		0.0189	0.0012	-0-
Corr.	-0-		+0.0012		
Sample wt	0.0216		0.0201		

Total weight 0.0417

Run No. 672/2

1, Average Dry Gas Meter Temperature:
Average Orifice Pressure Drop:
Average $H_@$:

2, Dry Gas Volume:

$$V_{mstd} = 17.64 * V_m * Y \left(\frac{P_{bar} + \Delta H/13.6}{T_m}\right) \quad 17.64 * 46.106 * 1.05 * \frac{30.25}{560}$$

$= 46.130$

3, Volume of water vapor:
$V_{wstd} = 0.04707$ ft3/ml $* V_{lc} = 0.04707 * 16.12$
$= 0.758$

4, Moisture Content:

$$B_{wo} = \frac{V_{wstd}}{V_{wstd} + V_{mstd}} \quad \frac{0.758}{0.758 + 46.130}$$

$= 0.016$

5, Concentration in gr/SCF:
$C_s = (0.0154 \text{ gr/mg})(M_n/V_{mstd}) = 0.0154 * \frac{41.7}{46.130}$
$= 0.0139$

6, Concentration in lb/ft3:
$C_s = 2.205 * 10\text{-}6\ (M_n/V_{mstd}) = 2.205 * 10^{-6} * \frac{41.7}{46.130}$
$= 1.99 * 10^{-6}$

7, Stack Gas Velocity:

$$V_{savg} = (85.49)(C_p)(P_{avg})\left(\frac{T_{s\,avg}}{P_s M_s}\right)^{.5} = (85.49)(.84)(0.302)\left(\frac{550}{(30.11)(28.70}\right)^{.5}$$

$= 17.302$

8, Stack Gas Volumetric Flowrate:

$$Q_s = 3600\ (1-B_{ws})\ (V_s)\ (A)\ \frac{T_{std}}{T_{savg}}\ \frac{P_s}{P_{std}} = (3600)(.984)(17.302)(1.563)\left(\frac{528}{550}\right)\left(\frac{30.1}{29.9}\right.$$

$= 92547$

9, Pollutant Mass Emission Rate, lb/hr:
$PMR_c = (Q_s)(C_s) = 92547 * 1.99 * 10^{-6}$
$= 0.184$

10, Percent Isokinetic:

$$I = (0.09450)\ \frac{T_s\ V_{mstd}}{P_s V_s A_n\ \theta\ (1-B_{ws})} = \frac{(0.0945)(550)(46.130)}{(30.11)(17.302)(0.000734)(.984)(63)}$$

$= 101\%$

Plant Hercules Inc. 072/3
Location Hattiesburg (Dracco Tinghouse)
Operator DM / JW
Date 26 May 88
Run no. # 3
Sample box no 001

Meter box no 001
Meter HQ 1.83
C factor 1.14
Pilot tube coefficient, Cp 0.84

Ambient temperature 85
Barometric pressure 30.11
Assumed moisture, % 2
Probe length, (ft) 6
Nozzle identification no .3675
Average calibrated nozzle diameter, cm (in) .3675
Probe heater setting 0
Leak rate m³/min, (cfm) .001
Probe liner material SS
Static pressure, mm. Hg (in. Hg) 30.11
Filter No.

SCHEMATIC OF STACK CROSS SECTION

Start Time: 1429 hrs

End Time: 1532 hrs

T. A #	Sample time (min)	Vacuum (in. Hg)	Stack temp. (F) (Ts)	Velocity head (in) (p)	Pressure differ across orific meter	Gas sample volume (cf)	Gas Sample temp. @ dry gas meter Inlet (F)	Gas Sample temp. @ dry gas meter Outlet (F)	Filter holder temp. (F)	Temp. of gas leaving condenser or last impinger (F)
Initial			✓	✓	✓	877.742	✓	✓		
1	7 min	2.5	90	.07	1.45	882.34	102	96	Ambient	<65
2	7 min	3.0	90	.09	1.85	887.25	118	98	Ambient	<65
3	7 min	4.0	92	.10	2.05	892.56	115	98	Ambient	<65
4	7 min	3.0	92	.08	1.65	897.60	119	99	Ambient	<65
5	7 min	4.0	91	.10	2.05	902.95	124	101	Ambient	<65
6	7 min	4.0	92	.10	2.05	908.43	123	102	Ambient	<65
7	7 min	3.0	92	.08	1.65	913.42	126	103	Ambient	<65
8	7 min	4.0	92	.10	2.05	918.74	124	104	Ambient	<65
→ 9	7 min	4.0	92	.10	2.05	924.213	124	104	Ambient	<65
10										
11										
12										
13										
14										
15										
16										
17										
18										
19										
20										
21										
22										
23										
24										
24										
T.	63		823	0.82	16.85		1065	905		
Avg			91	0.09	1.87	46.471	118.33	100.55		

BONNER ANALYTICAL TESTING COMPANY
RT. 13, BOX 85
HATTIESBURG, MS. 39401
(601)264-2854

NOMOGRAPH DATA

PLANT Hercules, Inc.

DATE 26 May 88

SAMPLING LOCATION Dracco Baghouse

CALIBRATED PRESSURE DIFFERENTIAL ACROSS ORIFICE, in. H O	H @	1.83
AVERAGE METER TEMPERATURE (AMBIENT + &- F), F 85 25	T m avg.	110
PERCENT MOISTURE IN GAS STREAM BY VOLUME	B wo	2
BAROMETRIC PRESSURE AT METER, in. Hg	P m	30.11
STATIC PRESSURE IN STACK, in. Hg (P m +0.073 x STACK GUAGE PRESSURE in in. H O 2) 30.11 + (.073)(.02)	P s	30.11
RATIO OF STATIC PRESSURE TO METER PRESSURE	s P m	1.00
AVERAGE STACK TEMPERATURE, F	T s avg.	90
AVERAGE VELOCITY HEAD, in. H O 2	P avg.	.09
MAXIMUM VELOCITY HEAD, in. H O 2	P avg.	.11
C FACTOR		1.14
CALCULATED NOZZLE DIAMETER, in.		.365
ACTUAL NOZZLE DIAMETER, in.		.367
REFERENCE P, in. H O 2		.09

072/3

1. Summary of Field Data

Run

1. Ambient Temperature (F):
2. Weather: overcast
3. Stack Height (ft): 30 ft
4. Stack Area (ft): 1.563
5. Meter H@: 1.83
6. Pitot Correction Factor: 0.84
7. Nomograph C_f : 1.12
8. Probe Heater Setting: NA
9. Filter Box Temperature (F): Ambient
10. Last Impinger Temperature (F): <65
11. Sample Time/Point: 7
12. Points/Traverse: 9
13. Probe Length: 6
14. Nozzle Diameter: 0.367
15. Vm: 46.471
16. Pbar: 30.11
17. Pavg: 0.09
18. $\Delta P_{avg}^{.5}$: 0.300
19. ΔH_{avg}: 1.87
20. Tsavg (°F): 91
21. Tsavg (°R): 551
22. TmIavg (°F): 110
23. TmOavg (°F): 91
24. Tmavg (°F): 100
25. Tmavg (°R): 560

26. Pm: 30.11

27. Ps: 30.11

28. V : 13.04

3. Impinger Data

	1	2	3	4
Final	102 ml s	100 ml s	1 ml.	210.04 g
Initial	100 ml s	100 ml s	0	200.00 g
Difference	2	0	1	10.04
			Total difference	13.04

4. Fyrite Data

Run

% Carbon Dioxide = 0%

% Oxygen = 21.9%.

% Carbon Monoxide =

$$\text{Excess Air (ea)} = (\%O_2) - 0.5(\%CO)/0.264(\%N_2) - (\%o) + 0.5(\%CO)$$

=

$$M_d - 0.44(\%CO_2) + 0.32(O_2) + 0.28(\%N_2 + \%CO)$$

=

= 28.88

$$M_s = M_d(1-B_{wo}) + 18(B_{wo})$$

$= 28.88(0.987) + 18(.013)$

$= \boxed{28.73}$

5. Filter Data

Run

	Filter	H O Fraction	Acetone Fraction	Acetone Blank	Filter Blank
Final wt	0.7153		84.8618	85.3740	0.6989
Initial wt	0.7031		84.8460	85.3728	0.6989
Difference	0.0122		0.0158	0.0012	-0-
Corr.	-0-		+0.0012		
Sample wt	0.0122		0.0170		

Total weight 0.0292

Run No. ~~07~~/072/3

1, Average Dry Gas Meter Temperature:
Average Orifice Pressure Drop:
Average $H_@$:

2, Dry Gas Volume:

$$V_{mstd} = 17.64 * V_m * Y \left(\frac{P_{bar} + \Delta H/13.6}{T_m}\right) = 17.64 * 46.471 * 1.05 \left(\frac{30.25}{560}\right)$$

$= \boxed{46.495}$

3, Volume of water vapor:
$V_{wstd} = 0.04707\ ft^3/ml * V_{lc} = 0.04707 * 13.04$
$= \boxed{0.613}$

4, Moisture Content:
$B_{wo} = \frac{V_{wstd}}{V_{wstd} + V_{mstd}} = \frac{.613}{(0.613 + 46.495)}$
$= \boxed{0.013}$

5, Concentration in gr/SCF:
$C_s = (0.0154\ gr/mg)(M_n/V_{mstd}) = 0.0184 * \frac{29.2}{46.495}$
$= \boxed{0.0097}$

6, Concentration in lb/ft3:
$C_s = 2.205 \times 10^{-6} (M_n/V_{mstd})$ $2.205 * 10^{-6} * \frac{29.2}{46.495}$
$= \boxed{1.38 * 10^{-6}}$

7, Stack Gas Velocity:
$V_{savg.} = (85.49)(C_p)(P_{avg})\left(\frac{T_{s\,avg}}{P_s M_s}\right)^{.5} = (85.49)(0.84)(0.300)\left(\frac{551}{30.11\ 28.73}\right)^{.5}$
$= \boxed{17.194}$

8, Stack Gas Volumetric Flowrate:
$Q_s = 3600\ (1-B_{ws})\ (V_s)\ (A)\ \frac{T_{std}}{T_{savg}}\ \frac{P_s}{P_{std}} = (3600)(0.987)(17.194)(1.563)\left(\frac{528}{551}\right)\left(\frac{30}{29}\right.$
$= \boxed{92682}$

9, Pollutant Mass Emission Rate, lb/hr:
$PMR_c = (Q_s)(C_s) = 92082 * 1.38 * 10^{-6}$
$= \boxed{0.127}$

10, Percent Isokinetic:

$$I = (0.09450)\frac{T_s\ V_{mstd}}{P_s V_s A_n\ \theta\ (1-B_{ws})} = \frac{(0.0945)(551)(46.495)}{(30.11)(17.194)(0.000734)(63)(0.987)}$$

$= \boxed{102.5\%}$

BONNER ANALYTICAL TESTING COMPANY
RT. 13, BOX 85
HATTIESBURG, MS. 39401
(601)264-2854

Probe Nozzle Calibration

5/25/88 OK MB

Theoretical diameter 0.312 inches

Actual diameter (inches)

	001	002	003	004	005	006
	0.1795	0.2460	0.3050	0.3670	0.4295	0.4930
	0.1790	0.2460	0.3050	0.3670	0.4290	0.4940
	0.1795	0.2465	0.3055	0.3675	0.4300	0.4940
	0.1790	0.2460	0.3050	0.3685	0.4290	0.4945
	0.1790	0.2460	0.3050	0.3670	0.4290	0.4940
	0.1790	0.2460	0.3050	0.3675	0.4295	0.4945
	0.1790	0.2460	0.3050	0.3675	0.4295	0.4940
	0.1795	0.2465	0.3055	0.3680	0.4295	0.4940
AVG.	0.1790	0.2460	0.3050	0.3675	0.4295	0.4940

Field Check

0.2465
0.2465
0.2460
0.2460 OK
0.2460
0.2460
0.2460

BONNER ANALYTICAL TESTING COMPANY
RT. 13, BOX 85
HATTIESBURG, MS. 39401
(601)264-2854

Pitot tube Calibration
Type S
Six foot (6) Pitot Tube

Date: 5/25/88 OKMSB

Point Number	P1	P2(a)	P2(b)	Cp
1	0.08	0.06	0.06	0.87
2	0.10	0.07	0.07	0.84
3	0.25	~~0.17~~ 0.18	0.17	0.83
4	0.47	0.33	~~0.33~~ 0.34	0.84
5	0.55	0.40	0.39	0.84
6	0.71	0.51	0.50	0.84
7	0.87	0.62	0.63	0.85
8	1.30	0.92	0.92	0.84

P2(a) = A leg of Pitot Tube
P2(b) = B leg of Pitot Tube
Cp = (P2/ P1) 1/2

$Y = 1.05$

Y = Ratio of reading of wet test meter to dry test meter; tolerance for individual values +0.02 from average.

$\Delta H@ = 1.83$

$H@$ = Orifice pressure differential that equates to 0.75 cfm of air @ 68 F 29.92 inches of mercury, in. H2O; tolerance for individual values +0.20 from average.

$$Yc = \frac{10}{Vm}\left[\frac{0.0319\,Tm}{Pbar}\right]^{0.5}$$

$$0.97Y \le Yc \le 1.03Y$$

$$1.02 \le Yc \le 1.08$$

$$Yc = \frac{10}{7.255}\left[\frac{0.0319 * 549}{30.05}\right]^{.5}$$

$$Yc = \boxed{1.05}$$

OK

5/25/88 mSB

$$\Delta H = (0.0319)(1.83)\frac{Tm}{Pbar}\frac{(10)^2}{(Vm)^2(Y)^2}$$

$$\Delta H = (0.0319)(1.83)\frac{549}{30.05} * \frac{(10)^2}{(7.255)^2(1.05)^2}$$

$$\Delta H = \boxed{1.84}$$ OK mSB

$$\Delta H = 1.83 \pm 0.2$$

BONNER ANALYTICAL TESTING COMPANY
RT. 13, BOX 85
HATTIESBURG, MS. 39401
(601)264-2854

Therometer and Pyrometer Calibration

Date: 5/25/88 OK MSB

Temperature (Corrected)	Pyrometer	DGM* Inlet	DGM* Outlet	Last Impinge	Hot Box
60 F	60 F	60 F	60 F	60 F	60 F
110 F	110 F	110 F	110 F	110 F	110 F
125 F	125 F	125 F	125 F	126 F	125 F
200 F	199 F				200 F
300 F	301 F				301 F
500 F	500 F				
750 F	749 F				
800 F	802F OK ←				

DGM* Inlet: Dry Gas Meter, Inlet

DGM* Outlet: Dry Gas Meter, Outlet

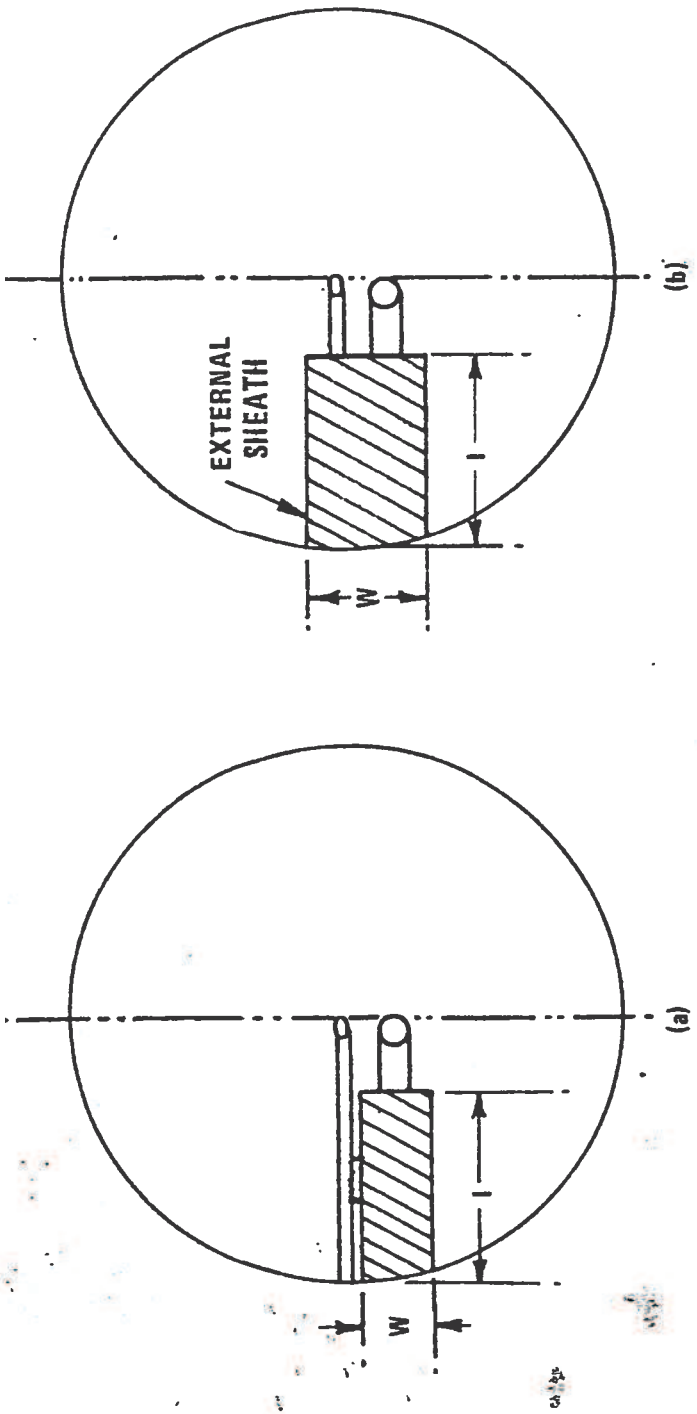

$$\text{ESTIMATED SHEATH BLOCKAGE (\%)} = \left[\frac{l \times W}{\text{DUCT AREA}}\right] \times 100$$

Figure 2-10. Projected-area models for typical pitot tube assemblies.

Figure 2-10. Projected-area models for typical pitot tube assemblies.

4.1.6 Field Use and Recalibration.

4.1.6.1 Field Use.

4.1.6.1.1 When a Type S pitot tube (isolated tube or assembly) is used in the field, the appropriate coefficient value (whether assigned or obtained by calibration) shall be used to perform velocity calculations. For calibrated Type S pitot tubes, the A side coefficient shall be used when the A side of the tube faces the flow, and the B side coefficient shall be used when the B side faces the flow; alternatively, the arithmetic average of the A and B side coefficient values may be used, irrespective of which side faces the flow.

4.1.6.1.2 When a probe assembly is used to sample a small duct (11 to 36 in. in diameter), the probe sheath sometimes blocks a significant part of the duct cross-section, causing a reduction in the effective value of $C_{p(s)}$. Consult Citation 9 in Section 6 for details. Conventional pitot-sampling probe assemblies are not recommended for use in ducts having inside diameters smaller than 12 inches (Citation 16 in Section 6).

4.1.6.2 Recalibration.

4.1.6.2.1 Isolated Pitot Tubes. After each field use, the pitot tube shall be carefully reexamined in top, side, and end views. If the pitot face openings are still aligned within the specifications illustrated in Figure 2-2 or 2-3, it can be assumed that the baseline coefficient of the pitot tube has not changed. If, however, the tube has been damanged to the extent that it no longer meets the specifications of Figure 2-2 or 2-3, the damage shall either be repaired to restore proper alignment of the face openings or the tube shall be discarded.

4.1.6.2.2 Pitot Tube Assemblies. After each field use, check the face opening alignment of the pitot tube, as in Section 4.1.6.2.1; also, remeasure the intercomponent spacings of the assembly. If the intercomponent spacings have not changed and the face opening alignment is acceptable, it can be assumed that the coefficient of the assembly has not changed. If the face opening alignment is no longer within the specifications of Figures 2-2 or 2-3, either repair the damage or replace the pitot tube (calibrating the new assembly, if necessary). If the intercomponent spacings have changed, restore the original spacings or recalibrate the assembly.

4.2 Standard pitot tube (if applicable). If a standard pitot tube is used for the velocity traverse, the tube shall be constructed according to the criteria of Section 2.7 and shall be assigned a baseline coefficient value of 0.99. If the standard pitot tube is used as part of an assembly, the tube shall be in an interference-free arrangement (subject to the approval of the Administrator).

4.3 Temperature Gauges. After each field use, calibrate dial thermometers, liquid-filled bulb thermometers, thermocouple-potentiometer systems, and other gauges at a temperature within 10 percent of the average absolute stack temperature. For temperatures up to 405° C (761° F), use an ASTM mercury-in-glass reference thermometer, or equivalent, as a reference; alternatively, either a reference thermocouple and potentiometer (calibrated by NBS) or thermometric fixed points, e.g., ice bath and boiling water (corrected for barometric pressure) may be used. For temperatures above 405° C (761° F), use an NBS-calibrated reference thermocouple-potentiometer system or an alternate reference, subject to the approval of the Administrator.

If, during calibration, the absolute temperatures measured with the gauge being calibrated and the reference gauge agree within 1.5 percent, the temperature data taken in the field shall be considered valid. Otherwise, the pollutant emission test shall either be considered invalid or adjustments (if appropriate) of the test results shall be made, subject to the approval of the Administrator.

4.4 Barometer. Calibrate the barometer used against a mercury barometer.

5. *Calculations*

Carry out calculations, retaining at least one extra decimal figure beyond that of the acquired data. Round off figures after final calculation.

5.1 Nomenclature.

A = Cross-sectional area of stack, m^2 (ft^2).

B_{ws} = Water vapor in the gas stream (from Method 5 or Reference Method 4), proportion by volume.

C_p = Pitot tube coefficient, dimensionless.

K_p = Pitot tube constant,

$$34.97 \frac{\text{m}}{\text{sec}} \left[\frac{(g/g\text{-mole})(\text{mm Hg})}{(°\text{K})(\text{mm } H_2O)}\right]^{1/2}$$

for the metric system and

$$85.49 \frac{\text{ft}}{\text{sec}} \left[\frac{(\text{lb/lb-mole})(\text{in. Hg})}{(°\text{R})(\text{in. } H_2O)}\right]^{1/2}$$

for the English system.

M_d = Molecular weight of stack gas, dry basis (see Section 3.6) g/g-mole (lb/lb-mole).

M_s = Molecular weight of stack gas, wet basis, g/g-mole (lb/lb-mole).

$= M_d(1 - B_{ws}) + 18.0\ B_{ws}$

Flue Gases. Leatherhead, England: The British Coal Utilisation Research Association, 1961. p. 129-133.

12. Knapp, K.T. The Number of Sampling Points Needed for Representative Source Sampling. In: Proceedings of the Fourth National Conference on Energy and the Environment, Theodore, L., et al. (ed.). Dayton, Dayton Section of the American Institute of Chemical Engineers. October 3-7, 1976. p. 563-568.

METHOD 2—DETERMINATION OF STACK GAS VELOCITY AND VOLUMETRIC FLOW RATE (TYPE S PITOT TUBE)

1. *Principle and Applicability*

1.1 Principle. The average gas velocity in a stack is determined from the gas density and from measurement of the average velocity head with a Type S (Stausscheibe or reverse type) pitot tube.

1.2 Applicability. This method is applicable for measurement of the average velocity of a gas stream and for quantifying gas flow.

This procedure is not applicable at measurement sites which fail to meet the criteria of Method 1, Section 2.1. Also, the method cannot be used for direct measurement in cyclonic or swirling gas streams; Section 2.4 of Method 1 shows how to determine cyclonic or swirling flow conditions. When unacceptable conditions exist, alternative procedures, subject to the approval of the Administrator, U.S. Environmental Protection Agency, must be employed to make accurate flow rate determinations; examples of such alternative procedures are: (1) to install straightening vanes; (2) to calculate the total volumetric flow rate stoichiometrically, or (3) to move to another measurement site at which the flow is acceptable.

2. *Apparatus*

Specifications for the apparatus are given below. Any other apparatus that has been demonstrated (subject to approval of the Administrator) to be capable of meeting the specifications will be considered acceptable.

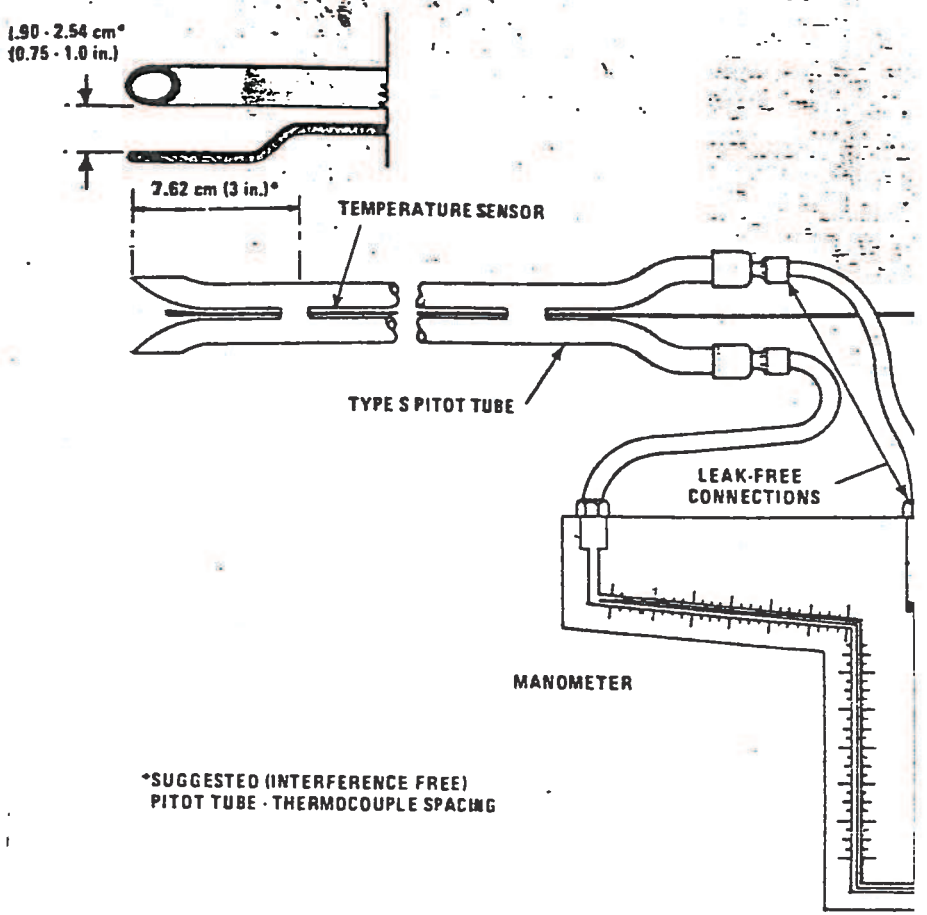

Figure 2-1. Type S pitot tube manometer assembly.

2.1 Type S Pitot Tube. The Type S pitot tube (Figure 2-1) shall be made of metal tubing (e.g. stainless steel). It is recommended that the external tubing diameter (dimension D_t, Figure 2-2b) be between 0.48 and 0.95 centimeters (3/16 and 3/8 inch). There shall be an equal distance from the base of each leg of the pitot tube to its face-opening plane (dimensions P_A and P_B, Figure 2-2b); it is recommended that this distance be between 1.05 and 1.50 times the external tubing diameter. The face openings of pitot tube shall, preferably, be aligne shown in Figure 2-2; however, slight alignments of the openings are permis (see Figure 2-3).

The Type S pitot tube shall have a kn coefficient, determined as outlined in tion 4, an identification number shall b signed to the pitot tube; this number s be permanently marked or engraved on body of the tube.

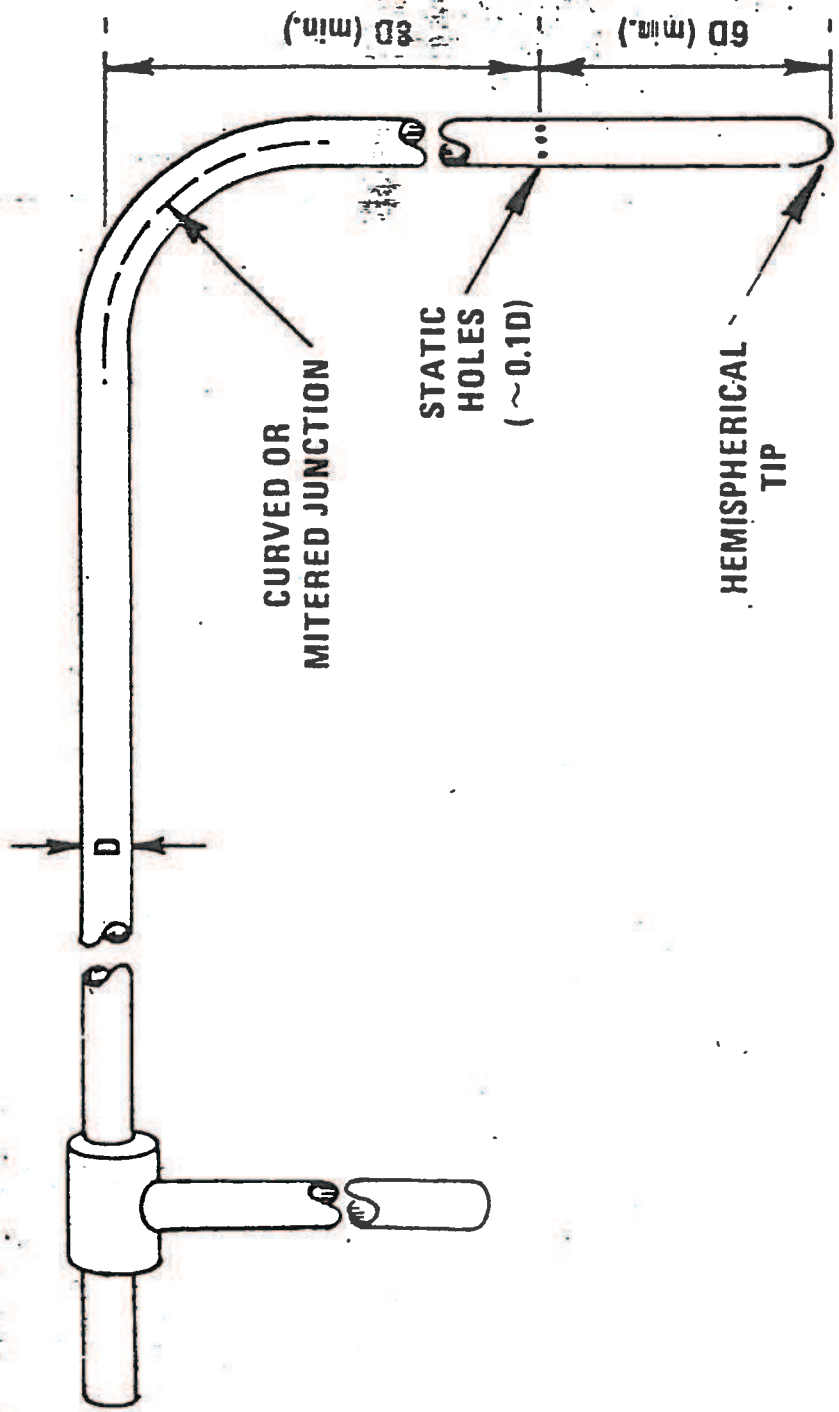

Figure 2-4. Standard pitot tube design specifications.

3. *Procedure*

3.1 Set up the apparatus as shown in Figure 2-1. Capillary tubing or surge tanks installed between the manometer and pitot tube may be used to dampen Δp fluctuations. It is recommended, but not required, that a pretest leak-check be conducted, as follows: (1) blow through the pitot impact opening until at least 7.6 cm (3 in.) H_2O velocity pressure registers on the manometer; then, close off the impact opening. The pressure shall remain stable for at least 15 seconds; (2) do the same for the static pressure side, except using suction to obtain the minimum of 7.6 cm (3 in.) H_2O. Other leak-check procedures, subject to the approval of the Administrator may be used.

3.2 Level and zero the manometer. Because the manometer level and zero may drift due to vibrations and temp changes, make periodic checks dur traverse. Record all necessary data a in the example data sheet (Figure 2-

3.3 Measure the velocity head a perature at the traverse points spec Method 1. Ensure that the proper d tial pressure gauge is being used range of Δp values encountered (see 2.2). If it is necessary to change to sensitive gauge, do so, and remeasur and temperature readings at each point. Conduct a post-test leak-chec datory), as described in Section 3.1 a validate the traverse run.

3.4 Measure the static pressure stack. One reading is usually adequa

3.5 Determine the atmospheric p

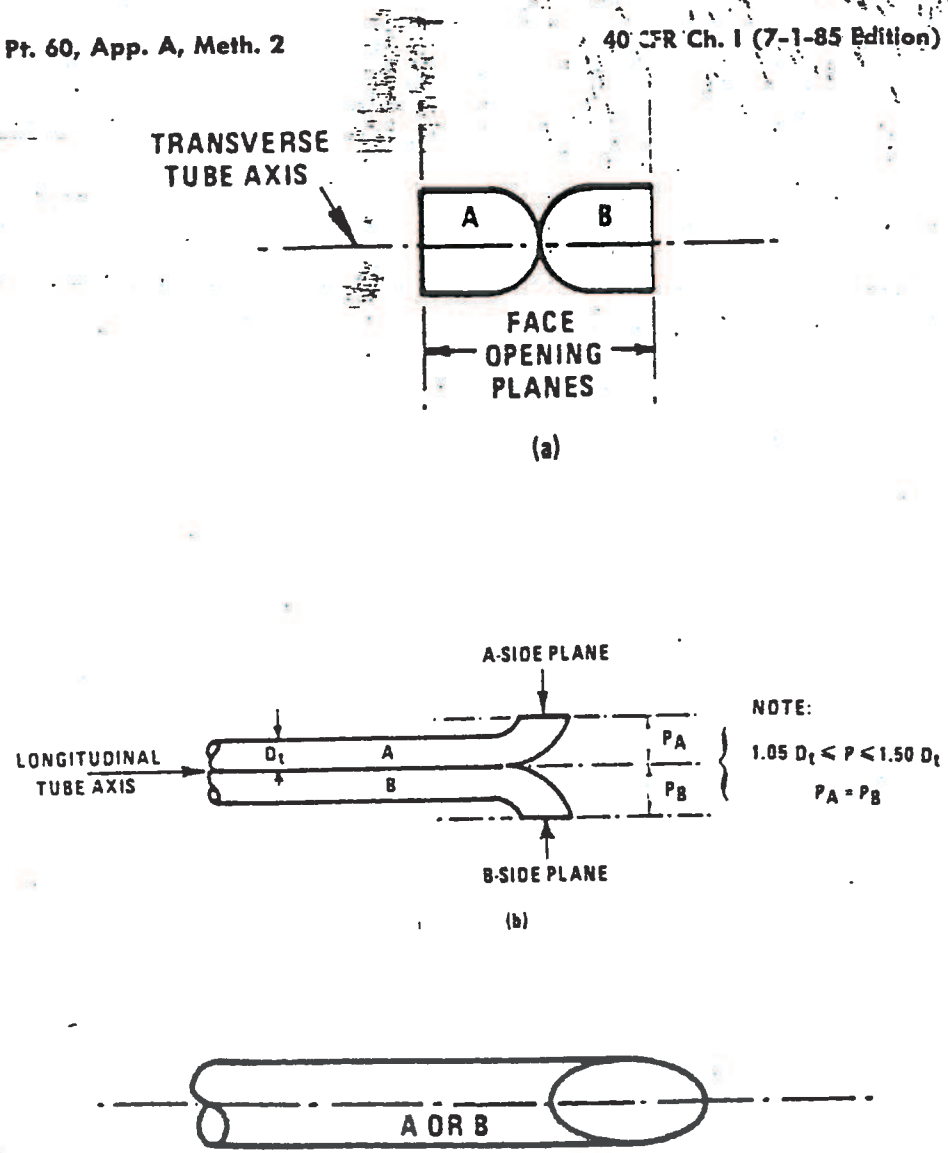

Figure 2-2. Properly constructed Type S pitot tube, shown in: (a) end view; face opening planes perpendicular to transverse axis; (b) top view; face opening planes parallel to longitudinal axis; (c) side view; both legs of equal length and centerlines coincident, when viewed from both sides. Baseline coefficient values of 0.84 may be assigned to pitot tubes constructed this way.

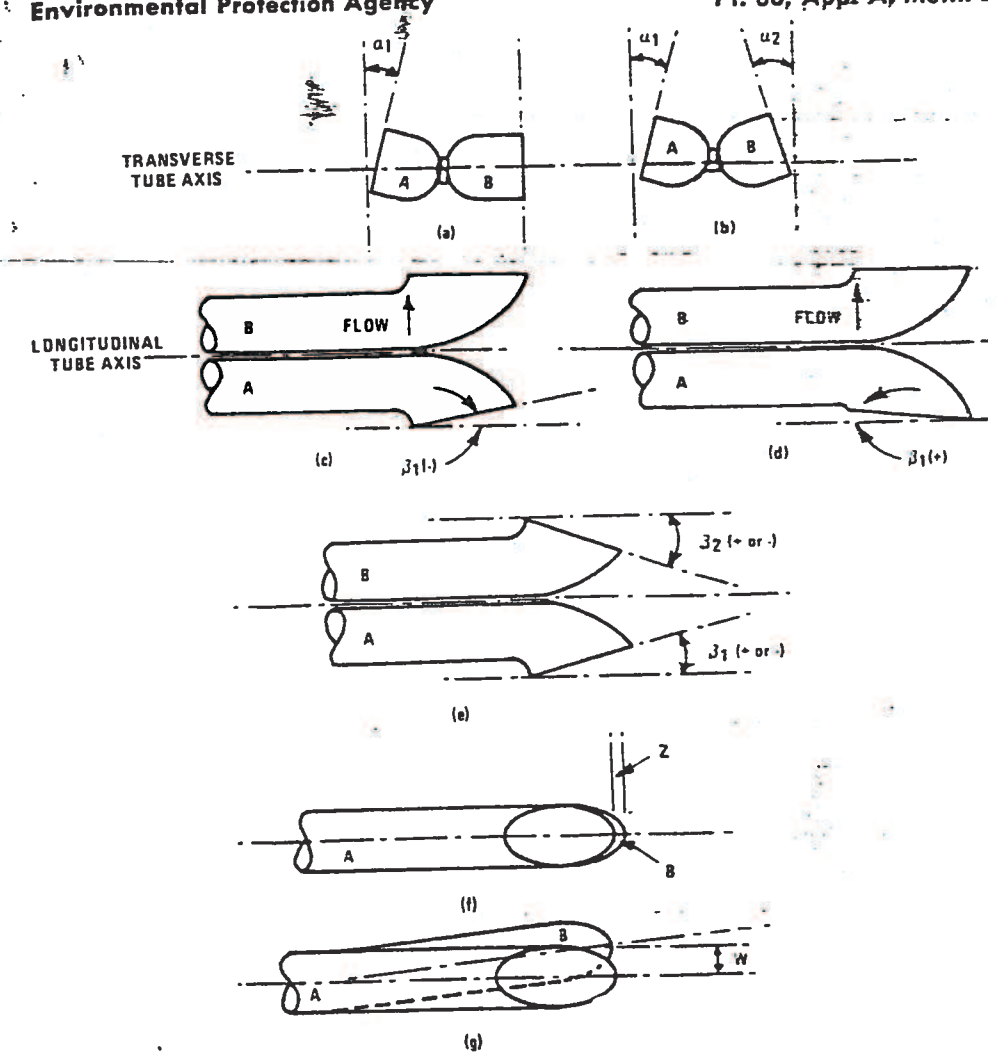

Figure 2-3. Types of face-opening misalignment that can result from field use or improper construction Type S pitot tubes. These will not affect the baseline value of Cp(s) so long as α1 and α2 10°, β1 and 5°, z 0.32 cm (1/8 in.) and w 0.08 cm (1/32 in.) (citation 11 in Section 6).

A standard pitot tube may be used instead of a Type S, provided that it meets the specifications of Sections 2.7 and 4.2; note, however, that the static and impact pressure holes of standard pitot tubes are susceptible to plugging in particulate-laden gas streams. Therefore, whenever a standard pitot tube is used to perform a traverse, adequate proof must be furnished that the openings of the pitot tube have not plugged up during the traverse period; this can be done by taking a velocity head (Δp) reading at the final traverse point, cleaning out impact and static holes of the stand pitot tube by "back-purging" with pres ized air, and then taking another Δp r ing. If the Δp readings made before after the air purge are the same (±5 cent), the traverse is acceptable. Otherw reject the run. Note that if Δp at the f traverse point is unsuitably low, anot point may be selected. If "back-purging regular intervals is part of the proced then comparative Δp readings shall

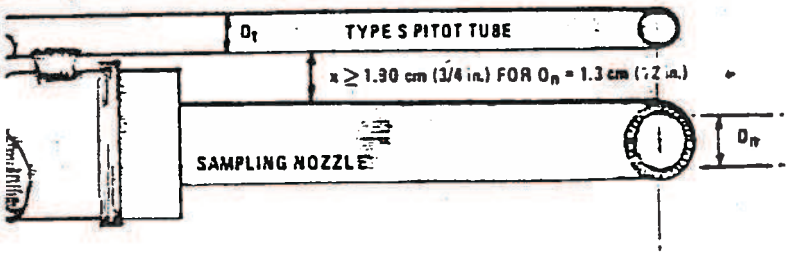

A. BOTTOM VIEW: SHOWING MINIMUM PITOT-NOZZLE SEPARATION.

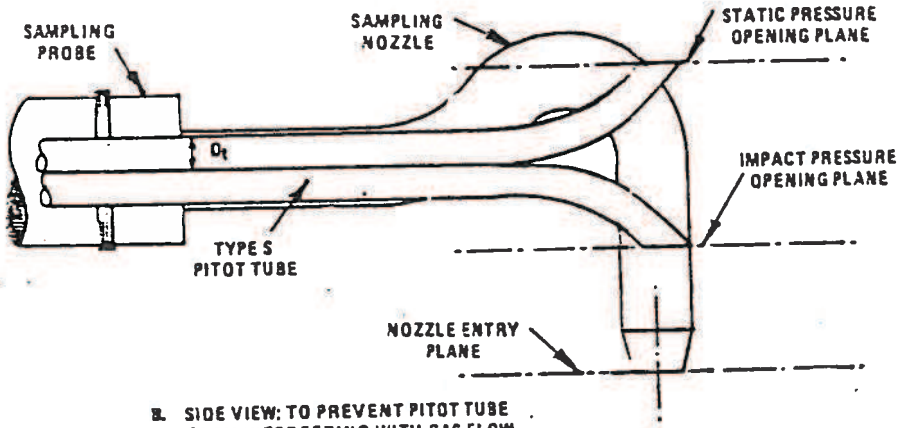

B. SIDE VIEW: TO PREVENT PITOT TUBE FROM INTERFERING WITH GAS FLOW STREAMLINES APPROACHING THE NOZZLE, THE IMPACT PRESSURE OPENING PLANE OF THE PITOT TUBE SHALL BE EVEN WITH OR ABOVE THE NOZZLE ENTRY PLANE.

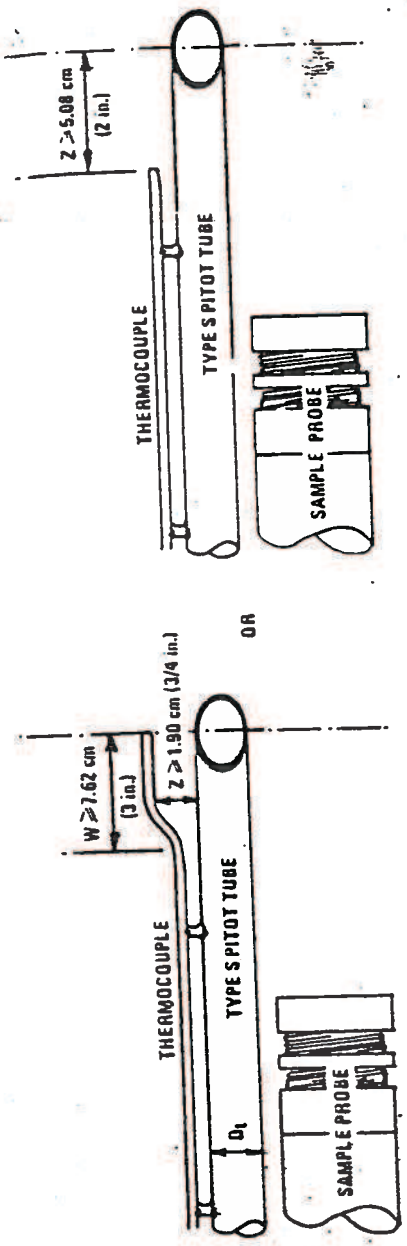

Figure 2-7. Proper thermocouple placement to prevent interference; D_t between 0.48 and 0.95 cm (3/16 and 3/8 in.).

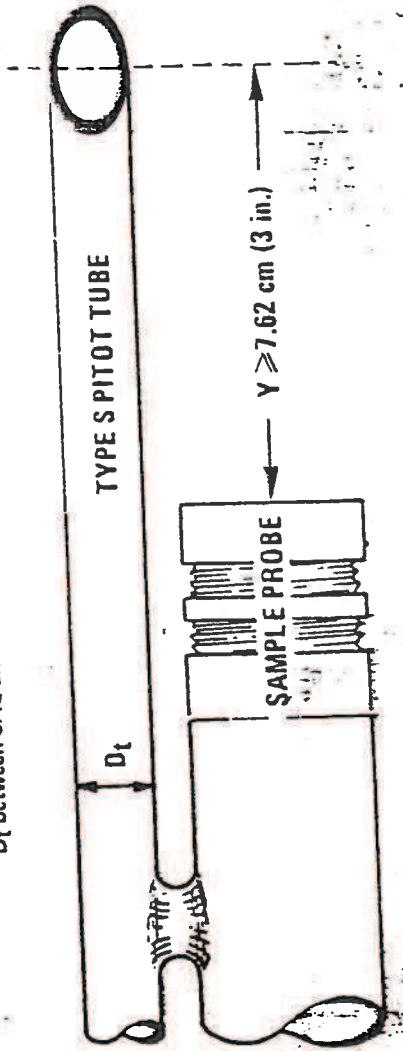

Figure 2-8. Minimum pitot-sample probe separation needed to prevent interference; D_t between 0.48 and 0.95 cm (3/16 and 3/8 in.).

$Y = 1.05$

Y = Ratio of reading of wet test meter to dry test meter; tolerance for individual values +0.02 from average.

$\Delta H@ = 1.83$

H@ = Orifice pressure differential that equates to 0.75 cfm of air @ 68 F 29.92 inches of mercury, in. H2O; tolerance for individual values +0.20 from average.

$$Yc = \frac{10}{Vm}\left[\frac{0.0319\,Tm}{Pbar}\right]^{0.5}$$

$0.97Y \leq Yc \leq 1.03Y$

$1.02 \leq Yc \leq 1.08$

$$Yc = \frac{10}{7.119}\left[\frac{0.0319(545)}{29.88}\right]^{.5}$$

$Yc =$ **1.07** OK 5/24/88

$$\Delta H = (0.0319)(1.83)\frac{Tm}{Pbar}\frac{(10)^2}{(Vm)^2(Y)^2}$$

$$\Delta H = (0.0319)(1.83)\left(\frac{545}{29.88}\right)\frac{10}{(7.119)^2(1.05)^2}$$

$\Delta H =$ **1.91** OK 5/24/88 LSB

$\Delta H = 1.83 \pm 0.2$