GRENADA COUNTY - TIE PLANT MS
KOPPERS INC
MSP090300
1996——2000

AI 00876

Koppers Inc

General Information

ID	Branch	SIC	County	Basin	Start	End
876	Energy and Transportation	2491	Grenada	Yazoo River	11/09/1981	

Address

Physical Address (Primary)	Mailing Address
1 Koppers Drive Tie Plant, MS 38960	PO Box 160 Tie Plant, MS 38960

Telecommunications

Type	Address or Phone
Work phone number	(662) 226-4584, Ext. 11

Alternate / Historic AI Identifiers

Alt ID	Alt Name	Alt Type	Start Date	End Date
2804300012	Koppers Industries, Inc.	Air-AIRS AFS	10/12/2000	
096000012	Koppers Industries, Inc.	Air-Title V Fee Customer	03/11/1997	
096000012	Koppers Industries, Inc.	Air-Title V Operating	03/11/1997	03/01/2002
096000012	Koppers Industries, Inc.	Air-Title V Operating	01/13/2004	01/01/2009
MSR220005	Koppers Industries, Inc.	GP-Wood Treating	09/25/1992	
MSD007027543	Koppers Industries, Inc.	Hazardous Waste-EPA ID	08/27/1999	
HW8854301	Koppers Industries, Inc.	Hazardous Waste-TSD	06/28/1988	06/28/1998
HW8854301	Koppers Industries, Inc.	Hazardous Waste-TSD	11/10/1999	09/30/2009
876	Koppers Industries, Inc.	Historic Site Name	11/09/1981	12/11/2006
876	Koppers, Inc.	Official Site Name	12/11/2006	
MSP090300	Koppers Industries, Inc.	Water-Pretreatment	11/14/1995	11/13/2000
MSP090300	Koppers Industries, Inc.	Water-Pretreatment	09/18/2001	08/31/2006
MSU081080	Koppers Industries, Inc.	Water-SOP	11/09/1981	11/30/1985

Regulatory Programs

Program	SubProgram	Start Date	End Date
Air	Title V - major	06/01/1900	
Hazardous Waste	Large Quantity Generator	08/27/1999	
Hazardous Waste	TSD - Not Classified	06/28/1988	
Water	Baseline Stormwater	01/01/1900	
Water	PT CIU	11/14/1995	
	PT CIU - Timber Products		

Water	Processing (Subpart 429)	11/14/1995	
Water	PT SIU	11/14/1995	

Locational Data

Latitude	Longitude	Metadata	S / T / R	Map Links
33 ° 44 ' 3 .00 (033.734167)	89 ° 47 ' 8 .06 (089.785572)	**Point Desc:** PG- Plant Entrance (General). Data collected by Mike Hardy on 11/8/2005. Elevation 223 feet. Just inside entrance gate. **Method:** GPS Code (Psuedo Range) Standard Position (SA Off) **Datum:** NAD83 **Type:** MDEQ	Section: Township: Range:	SWIMS TerraServer Map It

12/20/2006 12:16:40 PM

000876 Koppers Industries, Inc.

AI NAME: Koppers Industries Inc

BRANCH: Energy and Transportation Branch

COUNTY: Grenada

REGION: NRO

SIC 1: 2491

Physical Address

Line 1: 1 Koppers Drive
Line 2:
Line 3:
City: Tie Plant
State: MS
Zip: 38960

Mailing Address

Line 1: PO Box 160
Line 2:
Line 3:
City: Tie Plant
State: MS
Zip: 38960

Locational Information

Latitude: **Longitude**
Section: **Township:** **Range:**

Historic Names, Active Permit Numbers, and Other Associated IDs

RELATION or PERMIT TYPE	ALT/HISTORIC ID	ALT / HISTORIC NAME	START DATE
Air-AIRS AFS	04300012	Koppers Industries, Inc.	10/12/2000
Air-Title V Operating	096000012	Koppers Industries, Inc.	03/11/1997
Hazardous Waste-EPA ID	MSD007027543	Koppers Industries, Inc.	10/12/2000
Hazardous Waste-TSD	HW8854301	Koppers Industries, Inc.	11/10/1999
Official Site Name	876	Koppers Industries, Inc.	11/09/1981
Water-Pretreatment	MSP090300	Koppers Industries, Inc.	09/18/2001

Water Information

BASIN	RECEIVING STREAMS
Yazoo River Basin	1.)
	2.)
	3.)
	4.)

Staff to AI Assignments

MDEQ STAFF	FUNCTIONAL AREA
Rao, Maya	Permitting, Branch Manager
Rao, Maya	Permitting, Permit Writer
Lee, David	Compliance, Management
Collier, Melissa	Compliance, Staff
Collier, Melissa	Enforcement
Whittington, Darryail	Regional Office, Management

000876 Koppers Industries, Inc.

Related People Information

PERSON NAME	REALTIONSHIP
Henderson, Thomas	Is Air Permit Contact For
Henderson, Thomas	Is Water Permit Contact For
Henderson, Thomas	Is Contact For
Basilone, Timothy	Is Contact For

DATA CODED

Add a New Site

Site Name: Koppers Industries, Inc.

Official / Legal Name:

Air Type: Title V **Water Type:** IND **HW Type:** TSD

Site General Information

County: Grenada

Contact Name: Thomas Henderson

Contact Title: Plant Manager

Contact Phone: 226-4584

Physical Address: Tie Plant Rd.

City, State, Zip: Tie Plant MS 38960

Mailing Address: P.O. Box 160

City, State, Zip: Tie Plant MS 38960

Owner's Name: Koppers Industries, Inc.

Owner's Address: 436 Seventh Ave.

City, State, Zip: Pittsburgh PA 15219

Operator or Contractor Name:

Address City, State, Zip:

Site Identification Information

ECED Contact: Russ Twitty

SIC1: 2491 SIC2: SIC3:

AIRID: 00012 5digit ID assigned by Air Division

ERAID: MSD 007027543

ARGUS ANALYTICAL, INC.
235 Highpoint Drive
Ridgeland, Mississippi 39157
Telephone: 601/957-2676 FAX: 601/957-1887

27800

To: Koppers Company
1 Koppers Drive
Tie Plant, MS 38960

ATTN: Anthony Mayhan

Date Reported: 11/28/00

Date Sampled: 11/20/00
Time Sampled: 13:00
Sampled by: M. Harper

Project ID/Location: Facility Discharge
Weekly Requirements

Date Received: 11/21/00

Sample Description: Outfall 001

Sample Number: AA98502

Project Number:

Sample Matrix: WATER

Parameter	Result	Det Limit	Units	Method	Analysts	Date	Time
Biochemical Oxygen Demand	18.3	1.0	mg/L	405.1	DEP	11/22/00	07:55
Total Suspended Solids	343	3.0	mg/L	160.2	KWC	11/27/00	12:05
Phenolics, Total	ND	0.05	mg/L	420.1	AMB	11/27/00	15:20
Oil & Grease	ND	10	mg/L	1664	SMB	11/22/00	13:00
Pentachlorophenol	0.061	0.005	mg/L	625	RLT	11/21/00	16:23

ND = Not Detected

Monika E A Wolley
Quality Assurance/Quality Control

B. G. Giessner, Ph.D.

argusndt

Koppers Company 1 Koppers Drive Tie Plant MS 38960
Outfall: 001 Location: **Facility Discharge**

ARGUS . LYTICAL, INC.
235 HIGHPOINT DRIVE
RIDGELAND, MS 39157

Phone: 601/957-2676
FAX: 601/957-1887

LC: KOP_01W

Cooler: A578

Site No: 222
dmps: ---

Contact: Anthony Mayhan 226-4584 22
James Hatch FAX 226-4588

Action by ARGUS: Ship Kit

Kop_001_W

Comments:

Field Readings:

	Sample description		Sampled by	Sampling Date	Sampling Time	Container/Preservative	Qnty	C G	Parameters	Lab Use
1	**Weekly**	001 2014	M. Hatch	11-20-00	100	1000 ml Plastic / None	1	C	BOD TSS	A798502
1	**Weekly**	001 2015	"	"	"	1000 ml Glass / H2SO4	1	G	Total Phenols (420.1)	
1	**Weekly**	001 2016	"	"	"	1000 ml Glass / HCl	1	G	Oil & Grease	
1	**Weekly**	001 2017	"	"	"	1000 ml Glass / None	1	G	Pentachlorophenol (625)	

	Person	Date/Time		Person	Date/Time
Relinquished by:	M. Hatch	11-20-00/100	Received by:	M Vane	11/21/00 8:40

SR

coc_r07

06/20/00 14:42:50

ARGUS ANALYTICAL, INC.
235 Highpoint Drive
Ridgeland, Mississippi 39157
Telephone: 601/957-2676 FAX: 601/957-1887

31900

To: Koppers Company
1 Koppers Drive
Tie Plant, MS 38960

ATTN: Anthony Mayhan

Date Reported: 12/05/00

Date Sampled: 11/28/00
Time Sampled: 11:00
Sampled by: M. Harper

Project ID/Location: Facility Discharge
Weekly Requirements

Date Received: 11/29/00

Sample Description: Outfall 001

Sample Number: AA98770

Project Number:

Sample Matrix: WATER

Parameter	Result	Det Limit	Units	Method	Analysts	Date	Time
Biochemical Oxygen Demand	37.5	1.0	mg/L	405.1	DEP	11/29/00	13:25
Total Suspended Solids	476	2.0	mg/L	160.2	SMB	12/04/00	10:20
Phenolics, Total	0.05	0.05	mg/L	420.1	AMB	12/04/00	11:30
Oil & Grease	ND	6.7	mg/L	1664	SMB	11/29/00	11:15
Pentachlorophenol	0.049	0.005	mg/L	625	RLT	11/29/00	15:03

ND = Not Detected

Quality Assurance/Quality Control

B. G. Giessner, Ph.D.

argusndt

Koppers Company
1 Koppers Drive
Tie Plant MS 38960

Outfall: 001
Location: **Facility Discharge**

ARGUS ALYTICAL, INC.
235 ..GHPOINT DRIVE
RIDGELAND, MS 39157

Phone: 601/957-2676
FAX: 601/957-1887

LC: KOP_01W

Cooler: A-216

Site No: 222
dmps: ---

Contact: Anthony Mayhan 226-4584 22
James Hatch FAX 226-4588

Action by ARGUS: Ship Kit

Kop_001_W

Comments:

Field Readings:

	Sample description	Sampled by	Sampling Date	Sampling Time	Container/Preservative	Qnty	C G	Parameters	Lab Use
1	**Weekly** 001 2018	M. Harper	11-28-00	11:00	1000 ml Plastic / None	1	C	BOD TSS	M98770
1	**Weekly** 001 2019	"	"	"	1000 ml Glass / H2SO4	1	G	Total Phenols (420.1)	
1	**Weekly** 001 2020	"	"	"	1000 ml Glass / HCl	1	G	Oil & Grease	↓
1	**Weekly** 001 2021	"	"	"	1000 ml Glass / None	1	G	Pentachlorophenol (625)	↓

	Person	Date/Time		Person	Date/Time
Relinquished by:	M. Harper	11-28-00/ 1400	Received by:	M Vail	11/29/00 9:00

coc_r07

06/20/00 14:42:50

ARGUS ANALYTICAL, INC.
235 Highpoint Drive
Ridgeland, Mississippi 39157
Telephone: 601/957-2676 FAX: 601/957-1887

To: Koppers Company
1 Koppers Drive
Tie Plant, MS 38960

ATTN: Anthony Mayhan

Date Reported: 12/13/00

Date Sampled: 12/05/00
Time Sampled: 13:00
Sampled by: W. Harper

Project ID/Location: Facility Discharge
Weekly Requirements

Date Received: 12/06/00

Sample Description: Outfall 001

Sample Number: AA99150

Project Number:

Sample Matrix: WATER

Parameter	Result	Det Limit	Units	Method	Analysts	Date	Time
Biochemical Oxygen Demand	46.5	1.0	mg/L	405.1	AZT	12/06/00	13:40
Total Suspended Solids	294	2.0	mg/L	160.2	KDE	12/08/00	12:43
Phenolics, Total	0.06	0.05	mg/L	420.1	AMB	12/07/00	07:30
Oil & Grease	ND	6.7	mg/L	1664	SMB	12/12/00	08:40
Pentachlorophenol	0.047	0.005	mg/L	625	RLT	12/06/00	15:31

ND = Not Detected

Quality Assurance/Quality Control

B. G. Giessner, Ph.D.

argusndt

Koppers Company
1 Koppers Drive
Tie Plant MS 38960

Outfall: 001
Location: **Facility Discharge**

ARGUS ANALYTICAL, INC.
235 HIGHPOINT DRIVE
RIDGELAND, MS 39157

Phone: 601/957-2676
FAX: 601/957-1887

LC: KOP_01W

Cooler: A-14

Site No: 222
dmps: ---

Contact: Anthony Mayhan 226-4584 22
James Hatch FAX 226-4588

Action by ARGUS: Ship Kit

Kop_001_W

Comments:

Field Readings:

	Sample description	Sampled by	Sampling Date	Sampling Time	Container/Preservative	Qnty	C G	Parameters	Lab Use
1	**Weekly** 001 2022	M. Hatch	12-5-00	1:00	1000 ml Plastic / None	1	C	BOD TSS	M99150
1	**Weekly** 001 2023	"	"	"	1000 ml Glass / H2SO4	1	G	Total Phenols (420.1)	
1	**Weekly** 001 2024	"	"	"	1000 ml Glass / HCl	1	G	Oil & Grease	
1	**Weekly** 001 2025	"	"	"	1000 ml Glass / None	1	G	Pentachlorophenol (625)	

	Person	Date/Time		Person	Date/Time
Relinquished by:	M. Hatch	12-5-00 / 1:00 pm	Received by:	M Vaie	12/6/00 9:05

SR

coc_r07

06/20/00 14:42:5

FORM 2-P

For Agency Use
Application Number

Date Received

STATE OF MISSISSIPPI
OFFICE OF POLLUTION CONTROL
P. O. BOX 10385
JACKSON, MISSISSIPPI 39289-0385

APPLICATION FOR A STATE OPERATING PRETREATMENT PERMIT

(Please print or type)

1. Name of Applicant:	Koppers Industries, Inc.				
2. Mailing Address of Applicant:					
Number & Street (P. O. Box):	160				
City:	Tie Plant	State:	MS	Zip:	38960
Telephone Number:	(662) 226-4584				
3. Applicant's Authorized Agent:					
Name and Title:	Thomas L. Henderson — Plant Manager				
Number & Street (P. O. Box):	160				
City:	Tie Plant	State:	MS	Zip:	38960
Telephone Number:	(662) 226-4584				
4. Facilities Location:					
Number & Street (P. O. Box):	543 Tie Plant Road				
City:	Tie Plant	County:	Grenada		
Latitude (Deg., Min., Sec.):	North 33° - 44.123'				
Longitude (Deg., Min., Sec.):	West 89° - 47.025'				

5. Nature of Business:	Wood Preservation

6. Location Map: (Provide as an attachment to this application)

7. SIC CODES (4-digit, in order of priority)

A. FIRST		B. SECOND	
	2491		—
C. THIRD		**D. FOURTH**	
	—		—

8. Name of POTW Receiving Wastewater:	City of Grenada
Number & Street (P. O. Box):	310

City:	Grenada	County:	Grenada

9. Discharge Type and Occurrence:

A. Type of Discharge:	X	Continuous; If Continuous	
35,000	Gallons Per Day,		Batch
B. Discharge Occurrence:	7	Days per Week	

C. Discharge Occurrence:

X	January	X	February	X	March	X	April
X	May	X	June	X	July	X	August
X	September	X	October	X	November	X	December

10. If Batch: A.	N/A	Thousand Gallons per Discharge
B.	N/A	Hours per Day
C.	N/A	Discharge Occurrence per Day

11. Maximum Period of Flow: From	November	to	June
	Month		Month

12. Facility Water Use:	
Estimate average volume in thousand gallons per day for the following types of water usage at this facility.	
Noncontact Cooling:	360,000
Boiler Feed:	10,000
Process (Including Contact Cooling):	-0-
Sanitary:	400 - 500
Other:	-0-
Total:	370,500

13. List all Facility Discharges:
Other water losses (surface water, product consumption, evaporation). Indicate volume in thousand gallons.
Process, sanitary, boiler blowdown, contaminated stormwater to POTW.
Stormwater runoff to surface discharge. Cooling water evaporation,
septic tank.

14. Give narrative description of process(es) producing discharge, or in case of no discharge, that generates wastewater.
This process is a wood perserving operation which uses creosotes pentachloro-
phenol in oil generates process wastewater. Stormwater collected on process
areas becomes wastewater, additionally, sanitary wastewater from offices and
service buildings are discharged to septic tanks.

15. List raw materials used:
Southern pine and mixed hardwoods.

16. PRODUCTION	
A. Does an effluent guideline limitation promulgated by EPA under Sectio of the Clean Water Act apply to your Facility?	
☐ Yes (complete Item 16-B)	☒ No (Go to 17)
B. Are the limitations in the applicable effluent guidelines expressed in terms of production (or other measure of operation)?	
☐ Yes (complete Item 16-C)	☐ No (Go to 17)
C. If you answered "yes" to Item 16-B, list the quantity which represents an actual measurement of your level of production, expressed in the terms and units used in the applicable effluent guideline, and indicate the affected outfalls.	

1. AVERAGE DAILY PRODUCTION			2. AFFECTED OUTFALLS (list outfall numbers)
a. QUANTITY PER DAY	B. UNITS OF MEASURE	C. OPERATION, PRODUCT, MATERIAL, ETC. (specify)	

40 CFR Subpart H
Section 429.85
40 CFR Subpart G
Section 429.85

17. Effluent Characteristics:

A. You must provide the results of at least one analysis for every pollutant in this table. Complete one table for each outfall to the city sewer. If your facility does not have a discharge indicate so and disregard.

1. POLLUTANT	2. EFFLUENT							3. UNITS (specify if blank)		4. INTAKE (optional)		
	a. MAXIMUM DAILY VALUE		b. MAXIMUM 30 DAY VALUE (if available)		c. LONG TERM AVRG. VALUE (if available)		d. NO. OF ANALYSES			a. LONG TERM AVERAGE VALUE		b. NO. OF ANALYSIS
	(1) CONCENTRATION	(2) MASS	(1) CONCENTRATION	(2) MASS	(1) CONCENTRATION	(2) MASS		a. CONCENTRATION	b. MASS	(1) CONCENTRATION	(2) MASS	
a. Biochemical Oxygen Demand (BOD)	20 mg/1		240 mg/1		30 mg/1		1	NA	NA	NA	NA	NA
b. Chemical Oxygen Demand (COD)	75 mg/1		100 mg/1		75 mg/1		1	NA	NA	NA	NA	NA
c. Total Suspended Solids (TSS)	100 mg/1		250 mg/1		100 mg/1		1	NA	NA	NA	NA	NA
d. Ammonia (as N)	0.0 mg/1		00 mg/1		00 mg/1		1	NA	NA	NA	NA	NA
e. Flow	VALUE ~~340,000~~ 35,000		VALUE		VALUE					VALUE		
f. Temperature (winter)	VALUE 10°		VALUE		VALUE			°C		VALUE		
g. Temperature (summer)	VALUE 98°		VALUE		VALUE			°C		VALUE		
h. pH	MIN 8.2	MAX 9.5	MIN 5.5	MAX 9.5				STANDARD UNITS				

EASE PRINT OR TYPE IN THE UNSHADED AREAS ONLY. You may report some or all of this information on arate sheets (*Use the same format*) instead of completing these pages.

INTAKE AND EFFLUENT CHARACTERISTICS		OUTFALL NO.

Mark "X" in column 2-a for each pollutant you know or have reason to believe is present. Mark "X" in column 2-b for each pollutant you believe to be absent. If you mark column 2a for any pollutant which is limited either directly, or indirectly but expressly, in an effluent limitations guideline, you must provide the results of at least one analysis for that pollutant. For other pollutants for which you mark column 2a, you must provide quantitive data or an explanation of their presence in your discharge. Complete one table for each outfall.

1. POLLUTANT AND CAS NO. (if available)	2. MARK "X"		3. EFFLUENT							4. UNITS		5. INTAKE (optional)		
	A. BELIEVED PRESENT	B. BELIEVED ABSENT	A. MAXIMUM DAILY VALUE		b. MAXIMUM 30 DAY VALUE (if available)		c. LONG TERM AVERAGE VALUE (if available)		d. NO. OF ANALYSIS	a. CONCENTRATION	b. MASS	a. LONG TERM AVERAGE VALUE		b. NO. OF ANALYSES
			(1) CONC.	(2) MASS	(1) CONC.	(2) MASS	(1) CONC.	(2) MASS				(1) CONC.	(2) MASS	
a. Bromide (21959-67-4)		X							NA					
b. Chlorine, Total Residual		X							NA					
d. Fluoride (16984-48-8)		X							NA					
d. Nitrate-Nitrite (as N)		X							NA					

1. POLLUTANT AND CAS NO. (if available)	2. MARK "X"		3. EFFLUENT							4. UNITS		5. INTAKE (optional)		
	A. BELIEVED PRESENT	B. BELIEVED ABSENT	a. MAXIMUM DAILY VALUE		b. MAXIMUM 30 DAY VALUE (if available)		c. LONG TERM AVERAGE VALUE (if available)		d. NO. OF ANALYSIS	a. CONCENTRATION	b. MASS	a. LONG TERM AVERAGE VALUE		b. NO. OF ANALYSIS
			(1) CONC.	(2) MASS	(1) CONC.	(2) MASS	(1) CONC.	(2) MASS				(1) CONC.	(2) MASS	
e. Nitrogen, Total Organic (as N)		X							NA					
f. Oil and Grease	X		5 mg/l		100 mg/l		5 mg/l		1					
g. Phosphorus (as P), Total (7723-14-0)		X							NA					
h. Radioactivity														
1. Alpha, Total		X							NA					
2. Beta, Total		X							NA					
3. Radium Total		X							NA					
4. Radium 226, Total		X							NA					
i. Sulfate (as SO_4) (14808-79-8)		X							NA					

POLLUTANT AND CAS NO. (if available)	2. MARK "X"		3. EFFLUENT							4. UNITS		5. INTAKE (optional)		
	A. BELIEVED PRESENT	B. BELIEVED ABSENT	A. MAXIMUM DAILY VALUE		b. MAXIMUM 30 DAY VALUE (if available)		c. LONG TERM AVERAGE VALUE (if available)		d. NO. OF ANALYSIS	a. CONCENTRATION	b. MASS	a. LONG TERM AVERAGE VALUE		b. NO. OF ANALYSES
			(1) CONC.	(2) MASS	(1) CONC.	(2) MASS	(1) CONC.	(2) MASS				(1) CONC.	(2) MASS	
Sulfide (as S)		X							NA					
Sulfite (as SO) (14265-45-3)		X							NA					
Surfactants		X							NA					
Aluminum Total (7429-90-5)		X							NA					
Barium Total (7440-39-3)		X							NA					
Boron Total (7440-42-8)		X							NA					
Cobalt Total (7440-48-4)		X							NA					
Iron Total (7439-89-6)		X							NA					

1. POLLUTANT AND CAS NO. (if available)	2. MARK "X"		3. EFFLUENT							4. UNITS			
	A. BELIEVED PRESENT	B. BELIEVED ABSENT	A. MAXIMUM DAILY VALUE		B. MAXIMUM 30 DAY VALUE (if available)		C. LONG TERM AVERAGE VALUE (if available)		D. NO. OF ANALYSIS	a. CONCENTRATION	b. MASS	a. LONG TERM AVERAGE VALUE	
			(1) CONC.	(2) MASS	(1) CONC.	(2) MASS	(1) CONC.	(2) MASS				(1) CONC.	(2) MASS
f. Magnesium Total (7439-95-4)		X							NA				
g. Molybdenum Total (7439-98-7)		X							NA				
h. Manganese Total (7439-96-5)		X							NA				
i. Tin Total (7440-31-5)		X							NA				
j. Titanium Total (7440-32-6)		X							NA				

ART C - If you are a primary industry and this outfall contains process wastewater, refer to Table 1 (see attachment) to determine which of the GC/MS fractions you must test for. Mark "X" in column 2-a for all such GC/MS fractions that apply to your industry and for ALL toxic metals, cyanides, and total phenols. If you are not required to mark column 2-a (secondary industries, nonprocess wastewater outfalls, and nonrequired GC/MS fractions), mark "X" in column 2-b for each pollutant you know or have reason to believe is present. Mark "X" in column 2-c for each pollutant you believe is absent. If you mark column 2a for any pollutant, you must provide the results of at least one analysis for that pollutant. If you mark column 2b for any pollutant, you must provide the results of at least one analysis for that pollutant if you know or have reason to believe it will be discharged in concentrations of 10 ppb or greater. If you mark column 2b for acrolein, acrylonitrile, 2, 4 dinitrophenol, or 2-methyl-4, 6 dinitrophenol, you must provide the results of at least one analysis for each of these pollutants which you know or have reason to believe that you discharge in concentrations of 100 ppb or greater. Otherwise, for pollutants for which you mark column 2b, you must either submit at least one analysis or briefly describe the reasons the pollutant is expected to be discharged. Note that there are 20 pages to this part; please review each carefully. Complete one table (all 20 pages) for each outfall.

1. POLLUTANT AND CAS NO. (if available)	2. MARK "X"			3. EFFLUENT							4. UNITS		5. INTAKE (optional)		
	A. TESTING REQUIRED	B. BELIEVED PRESENT	C. BELIEVED ABSENT	A. MAXIMUM DAILY VALUE		b. MAXIMUM 30 DAY VALUE (if available)		c. LONG TERM AVERAGE VALUE (if available)		d. NO. OF ANALYSIS	a. CONCENTRATION	b. MASS	a. LONG TERM AVERAGE VALUE		b. NO. OF ANALYSES
				(1) CONC.	(2) MASS	(1) CONC.	(2) MASS	(1) CONC.	(2) MASS				(1) CONC.	(2) MASS	
METALS, CYANIDE, AND TOTAL PHENOLS															
1M. Antimony, Total (7440-36-0)			X							NA					
2M. Arsenic, Total (7440-38-2)			X							NA					
3M. Beryllium, Total (7440-41-7)			X							NA					

1. POLLUTANT AND CAS NO. (if available)	2. MARK "X"			3. EFFLUENT							4. UNITS		5. INTAKE (OPTIONAL)		
	a. TESTING REQUIRED	b. BELIEVED PRESENT	c. BELIEVED ABSENT	a. MAXIMUM DAILY VALUE		b. MAXIMUM 30 DAY VALUE (if available)		c. LONG TERM AVERAGE VALUE (if available)		d. NO. OF ANALYSES	a. CONCENTRATION	b. MASS	a. LONG TERM AVERAGE VALUE		b. NO. OF ANALYSES
				(1) CONC.	(2) MASS	(1) CONC.	(2) MASS	(1) CONC.	(2) MASS				(1) CONC.	(2) MASS	
4M, Cadmium, Total (7440-43-9)			X							NA					
5M, Chromium, Total (7440-47-3)			X							NA					
6M, Copper, Total (7440-50-8)			X							NA					
7M, Lead, Total (7439-92-1)			X							NA					
8M, Mercury, Total (7439-97-6)			X							NA					
9M, Nickel, Total (7440-02-0)			X							NA					
10M, Selenium, Total (7782-49-2)			X							NA					

1. POLLUTANT AND CAS NO. (if available)	2. MARK "X"			3. EFFLUENT							4. UNITS		5. INTAKE (optional)		
	A. TESTING REQUIRED	B. BELIEVED PRESENT	C. BELIEVED ABSENT	A. MAXIMUM DAILY VALUE		b. MAXIMUM 30 DAY VALUE (if available)		c. LONG TERM AVERAGE VALUE (if available)		d. NO. OF ANALYSIS	a. CONCENTRATION	b. MASS	a. LONG TERM AVERAGE VALUE		b. NO. OF ANALYSIS
				(1) CONC.	(2) MASS	(1) CONC.	(2) MASS	(1) CONC.	(2) MASS				(1) CONC.	(2) MASS	
11M. Silver, Total (7440-22-4)			X							NA					
12M. Thallium, Total (7440-28-0)		X								1	0.0				
13M. Zinc Total (7440-66-6)			X							NA					
14M. Cyanide, Total (57-12-5)			X							NA					
15M. Phenols, Total		X								1	0.0				
DIOXIN															
2,3,7,8-Tetrachlorodibenzo-p-Dioxin (1746-01-6)			X	DESCRIBE RESULTS											

1. POLLUTANT AND CAS NO. (if available)	2. MARK "X"			3. EFFLUENT							4. UNITS		5. INTAKE (optional)		
	A. TESTING REQUIRED	B. BELIEVED PRESENT	C. BELIEVED ABSENT	a. MAXIMUM DAILY VALUE		b. MAXIMUM 30 DAY VALUE (if available)		c. LONG TERM AVERAGE VALUE (if available)		d. NO. OF ANALYSIS	a. CONCENTRATION	b. MASS	a. LONG TERM AVERAGE VALUE		b. NO. OF ANALYSIS
				(1) CONC.	(2) MASS	(1) CONC.	(2) MASS	(1) CONC.	(2) MASS				(1) CONC.	(2) MASS	
GC/MS FRACTION - VOLATILE COMPOUNDS															
1V. Acrolein (107-02-8)			X							NA					
2V. Acrylonitrile (107-13-1)			X							NA					
3V. Benzene (71-43-2)		X								1	0.0				
4V. Bis (Chloromethyl) Ether (542-88-1)			X							NA					
5V. Bromoform (75-25-2)			X							NA					
6V. Carbon Tetrachloride (56-23-5)			X							NA					
7V. Chlorobenzene (108-90-7)			X							NA					

POLLUTANT AND CAS NO. (if available)	2. MARK "X"			3. EFFLUENT							4. UNITS		5. INTAKE (optional)		
	a. TESTING REQUIRED	b. BELIEVED PRESENT	c. BELIEVED ABSENT	a. MAXIMUM DAILY VALUE		b. MAXIMUM 30 DAY VALUE (if available)		c. LONG TERM AVERAGE VALUE (if available)		d. NO. OF ANALYSIS	a. CONCENTRATION	b. MASS	a. LONG TERM AVERAGE VALUE		b. NO. OF ANALYSIS
				(1) CONC.	(2) MASS	(1) CONC.	(2) MASS	(1) CONC.	(2) MASS				(1) CONC.	(2) MASS	
8V Chlorodibromomethane (124-48-1)			X							NA					
9V Chloroethane (75-00-3)			X							NA					
10V 2-Chloroethyl vinyl ether (110-75-8)			X							NA					
11V Chloroform (67-66-3)			X							NA					
12V Dichlorobromomethane (75-27-4)			X							NA					
13V Dichlorodifluoromethane (75-71-8)			X							NA					
14V 1,1-Dichloroethane (75-34-3)			X							NA					

1. POLLUTANT AND CAS NO. (if available)	2. MARK "X"			3. EFFLUENT							4. UNITS		5. INTAKE (optional)		
	A. TESTING REQUIRED	B. BELIEVED PRESENT	C. BELIEVED ABSENT	a. MAXIMUM DAILY VALUE		b. MAXIMUM 30 DAY VALUE (if available)		c. LONG TERM AVERAGE VALUE (if available)		d. NO. OF ANALYSIS	a. CONCENTRATION	b. MASS	a. LONG TERM AVERAGE VALUE		b. NO. OF ANALYSIS
				(1) CONC.	(2) MASS	(1) CONC.	(2) MASS	(1) CONC.	(2) MASS				(1) CONC.	(2) MASS	
15V. 1,2-Dichloroethane (107-06-2)			X							NA					
16V. 1,1-Dichloroethylene (75-35-4)			X							NA					
17V. 1,2-Dichloropropane (78-87-5)			X							NA					
18V. 1,3-Dichloropropylene (542-75-6)			X							NA					
19V. Ethylbenzene (100-41-4)			X							NA					
20V. Methyl Bromide (74-83-9)			X							NA					
21V. Methyl Chloride (74-87-3)			X							NA					

1. POLLUTANT AND CAS NO. (if available)	2. MARK "X"			3. EFFLUENT							4. UNITS		5. INTAKE (optional)		
	A. TESTING REQUIRED	B. BELIEVED PRESENT	C. BELIEVED ABSENT	A. MAXIMUM DAILY VALUE		b. MAXIMUM 30 DAY VALUE (if available)		c. LONG TERM AVERAGE VALUE (if available)		d. NO. OF ANALYSIS	a. CONCENTRATION	b. MASS	a. LONG TERM AVERAGE VALUE		b. NO. OF ANALYSES
				(1) CONC.	(2) MASS	(1) CONC.	(2) MASS	(1) CONC.	(2) MASS				(1) CONC.	(2) MASS	
GC/MS FRACTION - VOLATILE COMPOUNDS (continued)															
22V. Methylene chloride (75-09-2)			X							NA					
23V. 1,1,2,2-Tetrachloroethane (79-34-5)			X							NA					
24V. Tetrachloroethylene (127-18-4)			X							NA					
25V. Toluene (108-88-3)			X							NA					
26V. 1,2-trans-Dichloroethylene (156-60-5)			X							NA					

1. POLLUTANT AND CAS NO. (if available)	2. MARK "X"			3. EFFLUENT							4. UNITS				
	A. TESTING REQUIRED	B. BELIEVED PRESENT	C. BELIEVED ABSENT	A. MAXIMUM DAILY VALUE		B. MAXIMUM 30 DAY VALUE (if available)		C. LONG TERM AVERAGE VALUE (if available)		D. NO. OF ANALYSIS	A. CONCENTRATION	B. MASS	5. INTAKE (optional)		
				(1) CONC.	(2) MASS	(1) CONC.	(2) MASS	(1) CONC.	(2) MASS				(1) CONC.	(2) MASS	
27V. 1,1,1-Trichloroethane (71-55-6)			X							NA					
28V. 1,1,2-Trichloroethane (79-00-5)			X							NA					
29V. Trichloroethylene (79-01-6)			X							NA					
30V. Trichlorofluoromethane (75-69-4)			X							NA					
31V. Vinyl Chloride (75-01-4)			X							NA					
GC/MS FRACTION - ACID COMPOUNDS															
1A. 2-Chlorophenol (95-57-8)			X							NA					
2A. 2,4-Dichlorophenol (120-83-2)			X							NA					

1. POLLUTANT AND CAS NO. (if available)	2. MARK "X"			3. EFFLUENT							4. UNITS		5. INTAKE (optional)		
	A. TESTING REQUIRED	B. BELIEVED PRESENT	C. BELIEVED ABSENT	A. MAXIMUM DAILY VALUE		b. MAXIMUM 30 DAY VALUE (if available)		c. LONG TERM AVERAGE VALUE (if available)		d. NO. OF ANALYSIS	a. CONCENTRATION	b. MASS	A. LONG TERM AVERAGE VALUE		B. NO. OF ANALYSES
				(1) CONC.	(2) MASS	(1) CONC.	(2) MASS	(1) CONC.	(2) MASS				(1) CONC.	(2) MASS	
3A. 2,4-Dimethylphenol [illegible]			X							NA					
4A. 4,6-Dinitro-O-Cresol (534-52-1)			X							NA					
5A. 2,4-Dinitrophenol (51-28-5)			X							NA					
6A. 2-Nitrophenol (88-75-5)			X							NA					
7A. 4-Nitrophenol (100-02-7)			X							NA					
8A. P-Chloro-M-Cresol (59-50-7)			X							NA					
9A. Pentachlorophenol (87-86-5)		X		0		0		0		1					

1. POLLUTANT AND CAS NO. (if available)	2. MARK "X"			3. EFFLUENT							4. UNITS		5. INTAKE (optional)		
	a. TESTING REQUIRED	b. BELIEVED PRESENT	c. BELIEVED ABSENT	a. MAXIMUM DAILY VALUE		b. MAXIMUM 30 DAY VALUE (if available)		d. LONG TERM AVERAGE VALUE (if available)		d. NO. OF ANALYSIS	a. CONCENTRATION	b. MASS	a. LONG TERM AVERAGE VALUE		b. NO. OF ANALYSIS
				(1) CONC.	(2) MASS	(1) CONC.	(2) MASS	(1) CONC.	(2) MASS				(1) CONC.	(2) MASS	
10A. Phenol (108-95-2)		X								1	0.0				
11A. 2,4,6-Trichlorophenol (88-06-2)			X							NA					
GC/MS FRACTION - BASE/NEUTRAL COMPOUNDS															
1B. Acenaphthene (83-32-9)		X								1	0.0				
2B. Acenaphtylene (208-96-8)			X							NA					
3B. Anthracene (120-12-7)			X							NA					
4B. Benzidine (92-87-5)			X							NA					
5B. Benzo (a) Anthracene (56-55-3)			X							NA					

1. POLLUTANT AND CAS NO. (if available)	2. MARK "X"			3. EFFLUENT							4. UNITS		5. INTAKE (optional)		
	A. TESTING REQUIRED	B. BELIEVED PRESENT	C. BELIEVED ABSENT	a. MAXIMUM DAILY VALUE		b. MAXIMUM 30 DAY VALUE (if available)		c. LONG TERM AVERAGE VALUE (if available)		d. NO. OF ANALYSIS	a. CONCENTRATION	b. MASS	a. LONG TERM AVERAGE VALUE		b. NO. OF ANALYSES
				(1) CONC.	(2) MASS	(1) CONC.	(2) MASS	(1) CONC.	(2) MASS				(1) CONC.	(2) MASS	
6B. Benzo (a) Pyrene (50-32-8)			X							NA					
7B. 3,4-Benzo-fluor-anthene (205-99-2)			X							NA					
8B. Benzo (ghi) Perylene (191-24-2)			X							NA					
9B. Benzo (k) Fluor-anthene (207-08-9)			X							NA					
10B. Bis (2-Chloro-ethoxy) Methane (111-91-1)			X							NA					
11B. Bis (2-Chloro-ethyl) Ether (111-44-4)			X							NA					

1. POLLUTANT AND CAS NO. (if available)	2. MARK "X"			3. EFFLUENT							4. UNITS		5. INTAKE (optional)		
	A. TESTING REQUIRED	B. BELIEVED PRESENT	C. BELIEVED ABSENT	A. MAXIMUM DAILY VALUE		b. MAXIMUM 30 DAY VALUE (if available)		c. LONG TERM AVERAGE VALUE (if available)		d. NO. OF ANALYSIS	a. CONCENTRATION	b. MASS	a. LONG TERM AVERAGE VALUE		b. NO. OF ANALYSIS
				(1) CONC.	(2) MASS	(1) CONC.	(2) MASS	(1) CONC.	(2) MASS				(1) CONC.	(2) MASS	
12B. Bis(2-Chloroisopropyl) Ether (102-60-1)			X							NA					
13B. Bis(2-Ethylhexyl) Phthalate (117-81-7)			X							NA					
14B. 4-Bromophenyl Phenyl Ether (101-55-3)			X							NA					
15B. Butyl Benzyl Phthalate (85-68-7)			X							NA					
16B. 2-Chloronaphthalene (91-58-7)			X							NA					
17B. 4-Chlorophenyl Phenyl Ether (7005-72-3)			X							NA					

1. POLLUTANT AND CAS NO. (if available)	2. MARK "X"			3. EFFLUENT							4. UNITS		5. INTAKE (optional)		
	A. TESTING REQUIRED	B. BELIEVED PRESENT	C. BELIEVED ABSENT	A. MAXIMUM DAILY VALUE		b. MAXIMUM 30 DAY VALUE (if available)		c. LONG TERM AVERAGE VALUE (if available)		d. NO. OF ANALYSIS	a. CONCENTRATION	b. MASS	a. LONG TERM AVERAGE VALUE		b. NO. OF ANALYSES
				(1) CONC.	(2) MASS	(1) CONC.	(2) MASS	(1) CONC.	(2) MASS				(1) CONC.	(2) MASS	
18B. Chrysene (218-01-9)			X							NA					
19B. Dibenzo (a,h) Anthracene (53-70-3)			X							NA					
20B. 1,2-Dichlorobenzene (95-50-1)			X							NA					
21B. 1,3-Dichlorobenzene (541-73-1)			X							NA					
GC/MS FRACTION - BASE/NEUTRAL COMPOUNDS (continued)															
22B. 1,4-Dichlorobenzene (106-46-7)			X							NA					
23B. 3,3-Dichlorobenzidine (91-94-1)			X							NA					

1. POLLUTANT AND CAS NO. (if available)	2. MARK "X"			3. EFFLUENT							4. UNITS		5. INTAKE (optional)		
	A. TESTING REQUIRED	B. BELIEVED PRESENT	C. BELIEVED ABSENT	A. MAXIMUM DAILY VALUE		b. MAXIMUM 30 DAY VALUE (if available)		c. LONG TERM AVERAGE VALUE (if available)		d. NO. OF ANALYSIS	a. CONCENTRATION	b. MASS	a. LONG TERM AVERAGE VALUE		b. NO. OF ANALYSIS
				(1) CONC.	(2) MASS	(1) CONC.	(2) MASS	(1) CONC.	(2) MASS				(1) CONC.	(2) MASS	
24B. Diethyl Phthalate (84-66-2)			X							NA					
25B. Dimethyl Phthalate (131-11-3)			X							NA					
26B. Di-N-Butyl Phthalate (84-74-2)			X							NA					
27B. 2,4-Dinitrotoluene (121-14-2)			X							NA					
28B. 2,6-Dinitrotoluene (606-20-2)			X							NA					
29B. Di-N-Octyl Phthalate (117-84-0)			X							NA					
30B. 1,2-Diphenylhydrazine (as Azobenzene) (122-66-7)			X							NA					

1. POLLUTANT AND CAS NO. (if available)	2. MARK "X"			3. EFFLUENT							4. UNITS		5. INTAKE (optional)		
	a. TESTING REQUIRED	b. BELIEVED PRESENT	c. BELIEVED ABSENT	a. MAXIMUM DAILY VALUE		b. MAXIMUM 30 DAY VALUE (if available)		c. LONG TERM AVERAGE VALUE (if available)		d. NO. OF ANALYSIS	a. CONCENTRATION	b. MASS	a. LONG TERM AVERAGE VALUE		b. NO. OF ANALYSIS
				(1) CONC.	(2) MASS	(1) CONC.	(2) MASS	(1) CONC.	(2) MASS				(1) CONC.	(2) MASS	
31B. Fluoranthene (206-44-0)			X							NA					
32B. Fluorene (86-73-7)			X							NA					
33B. Hexachlorobenzene (118-74-1)			X							NA					
34B. Hexachlorobutadiene (87-68-3)			X							NA					
35B. Hexachlorocyclopentadiene (77-47-4)			X							NA					
36B. Hexachloroethane (67-72-1)			X							NA					
37B. Indeno (1,2,3-cd) pyrene (193-39-5)			X							NA					

1. POLLUTANT AND CAS NO. (if available)	2. MARK "X"			3. EFFLUENT							4. UNITS		5. INTAKE (optional)		
	A. TESTING REQUIRED	B. BELIEVED PRESENT	C. BELIEVED ABSENT	A. MAXIMUM DAILY VALUE		b. MAXIMUM 30 DAY VALUE (if available)		c. LONG TERM AVERAGE VALUE (if available)		d. NO. OF ANALYSIS	a. CONCENTRATION	b. MASS	a. LONG TERM AVERAGE VALUE		b. NO. OF ANALYSIS
				(1) CONC.	(2) MASS	(1) CONC.	(2) MASS	(1) CONC.	(2) MASS				(1) CONC.	(2) MASS	
38B. Isophorone (78-59-1)			X							NA					
39B. Naphthalene (91-20-3)		X		0		0		0		1					
40B. Nitrobenzene (98-95-3)			X							NA					
41B. N-Nitrosodimethylamine (62-75-9)			X							NA					
42B. N-Nitrosodi-N-propylamine (621-64-7)			X							NA					
GC/MS FRACTION - BASE/NEUTRAL COMPOUNDS (continued)															
43B. N-Nitrosodiphenylamine (86-30-6)			X							NA					
44B. Phenanthrene (85-01-8)			X							NA					

1. POLLUTANT AND CAS NO. (if available)	2. MARK "X"			3. EFFLUENT							4. UNITS		5. INTAKE (optional)		
	A. TESTING REQUIRED	B. BELIEVED PRESENT	C. BELIEVED ABSENT	A. MAXIMUM DAILY VALUE		b. MAXIMUM 30 DAY VALUE (if available)		c. LONG TERM AVERAGE VALUE (if available)		d. NO. OF ANALYSIS	a. CONCENTRATION	b. MASS	a. LONG TERM AVERAGE VALUE		b. NO. OF ANALYSIS
				(1) CONC.	(2) MASS	(1) CONC.	(2) MASS	(1) CONC.	(2) MASS				(1) CONC.	(2) MASS	
45b. Pyrene (129-00-0)			X							NA					
46. 1,2,4-Trichlorobenzene (120-82-1)			X							NA					
GC/MS FRACTION - PESTICIDES															
1P. Aldrin (309-00-2)			X							NA					
2P. α-BHC (319-84-6)			X							NA					
3P. β-BHC (319-85-7)			X							NA					
4P. γ-BHC (58-89-9)			X							NA					
5P. δ-BHC (319-86-8)			X							NA					
6P. Chlordane (57-74-9)			X							NA					
7P. 4,4'-DDT (50-29-3)			X							NA					

1. POLLUTANT AND CAS NO. (if available)	2. MARK "X"			3. EFFLUENT							4. UNITS		5. INTAKE (optional)		
	A. TESTING REQUIRED	B. BELIEVED PRESENT	C. BELIEVED ABSENT	A. MAXIMUM DAILY VALUE		b. MAXIMUM 30 DAY VALUE (if available)		d. LONG TERM AVERAGE VALUE (if available)		d. NO. OF ANALYSIS	a. CONCENTRATION	b. MASS	a. LONG TERM AVERAGE VALUE		b. NO. OF ANALYSIS
				(1) CONC.	(2) MASS	(1) CONC.	(2) MASS	(1) CONC.	(2) MASS				(1) CONC.	(2) MASS	
8P. 4,4'-DDE (72-55-9)			X							NA					
9P. 4,4'-DDD (72-54-8)			X							NA					
10P. Dieldrin (60-57-1)			X							NA					
11P. α-Endosulfan (115-29-7)			X							NA					
12P. β-Endosulfan (115-29-7)			X							NA					
13P. Endosulfan Sulfate (1031-07-8)			X							NA					
14P. Endrin (72-20-8)			X							NA					
15P. Endrin Aldehyde (7421-93-4)			X							NA					

1. POLLUTANT AND CAS NO. (if available)	2. MARK "X"			3. EFFLUENT							4. UNITS		5. INTAKE (optional)		
	A. TESTING REQUIRED	B. BELIEVED PRESENT	C. BELIEVED ABSENT	A. MAXIMUM DAILY VALUE		b. MAXIMUM 30 DAY VALUE (if available)		c. LONG TERM AVERAGE VALUE (if available)		d. NO. OF ANALYSIS	a. CONCENTRATION	b. MASS	a. LONG TERM AVERAGE VALUE		b. NO. OF ANALYSIS
				(1) CONC.	(2) MASS	(1) CONC.	(2) MASS	(1) CONC.	(2) MASS				(1) CONC.	(2) MASS	
GC/MS FRACTION - PESTICIDES (continued)															
16P. Heptachlor ([illegible]-44-8)			X							NA					
17P. Heptachlor Epoxide (1024-57-3)			X							NA					
18P. PCB-1242 (53469-21-9)			X							NA					
19P. PCB-1254 (11097-69-1)			X							NA					
20P. PCB-1[illegible] ([illegible]-28-2)			X							NA					
21P. PCB-1232 (11141-16-5)			X							NA					

1. POLLUTANT AND CAS NO. (if available)	2. MARK "X"			3. EFFLUENT							4. UNITS		5. INTAKE (optional)		
	A. TESTING REQUIRED	B. BELIEVED PRESENT	C. BELIEVED ABSENT	a. MAXIMUM DAILY VALUE		b. MAXIMUM 30 DAY VALUE (if available)		c. LONG TERM AVERAGE VALUE (if available)		d. NO. OF ANALYSIS	a. CONCENTRATION	b. MASS	a. LONG TERM AVERAGE VALUE		b. NO. OF ANALYSIS
				(1) CONC.	(2) MASS	(1) CONC.	(2) MASS	(1) CONC.	(2) MASS				(1) CONC.	(2) MASS	
GC/MS FRACTION PESTICIDES (continued)															
22P. PCB-1248 (12672-29-6)			X							NA					
23P. PCB-1260 (11096-82-5)			X							NA					
24P. PCB-1016 (12674-11-2)			X							NA					
25P. Toxaphene (8001-35-2)			X							NA					

18. Treatment Units:

A. Do you provide treatment for your wastewater? [X] Yes [ ] No

B. If yes, list and describe each treatment unit and attach a line schematic of the treatment system indicating each treatment unit and a water balance.

Oil and water separation including flowcalculation and gravity separation followed by activated sludge biological tretment. Discharged to P.O.T.W.

Schematic Attached

19. CONTRACT ANALYSIS INFORMATION

Were any of the analyses reported in Item 17 performed by a contract laboratory or consulting firm?

[X] YES (list the name, address, and telephone number of, and pollutants analyzed by, each such laboratory or firm below)

[ ] NO (go to Item 20)

A. NAME	B. ADDRESS	C. TELEPHONE (area code & no.)	D. POLLUTANTS ANALYZED (list)
Argus Analytical Inc.	235 Highpoint Dr. Ridgeland, MS. 39157	601 9572676	1) Biochemical Oxygen Demand 2) Total Suspended Solids 3) Phenolics, Total 4) Oil & Grease 5) Pentachlorophenol

20. I certify that I am familiar with the information contained in this application and that to the best of my knowledge and belief such information is true and correct.

RANDALL D. COLLINS	VICE PRESIDENT & SECRETARY
Printed Name of Applicant's Authorized Agent Title and/or Individual Meeting Signatory Requirements of 40 CFR 403.12(l)	Title
2-6-01	
Date Application Signed	Signature of Authorized Agent and/or Individual Meeting Signatory Requirements of 40 CFR 403.12(l)

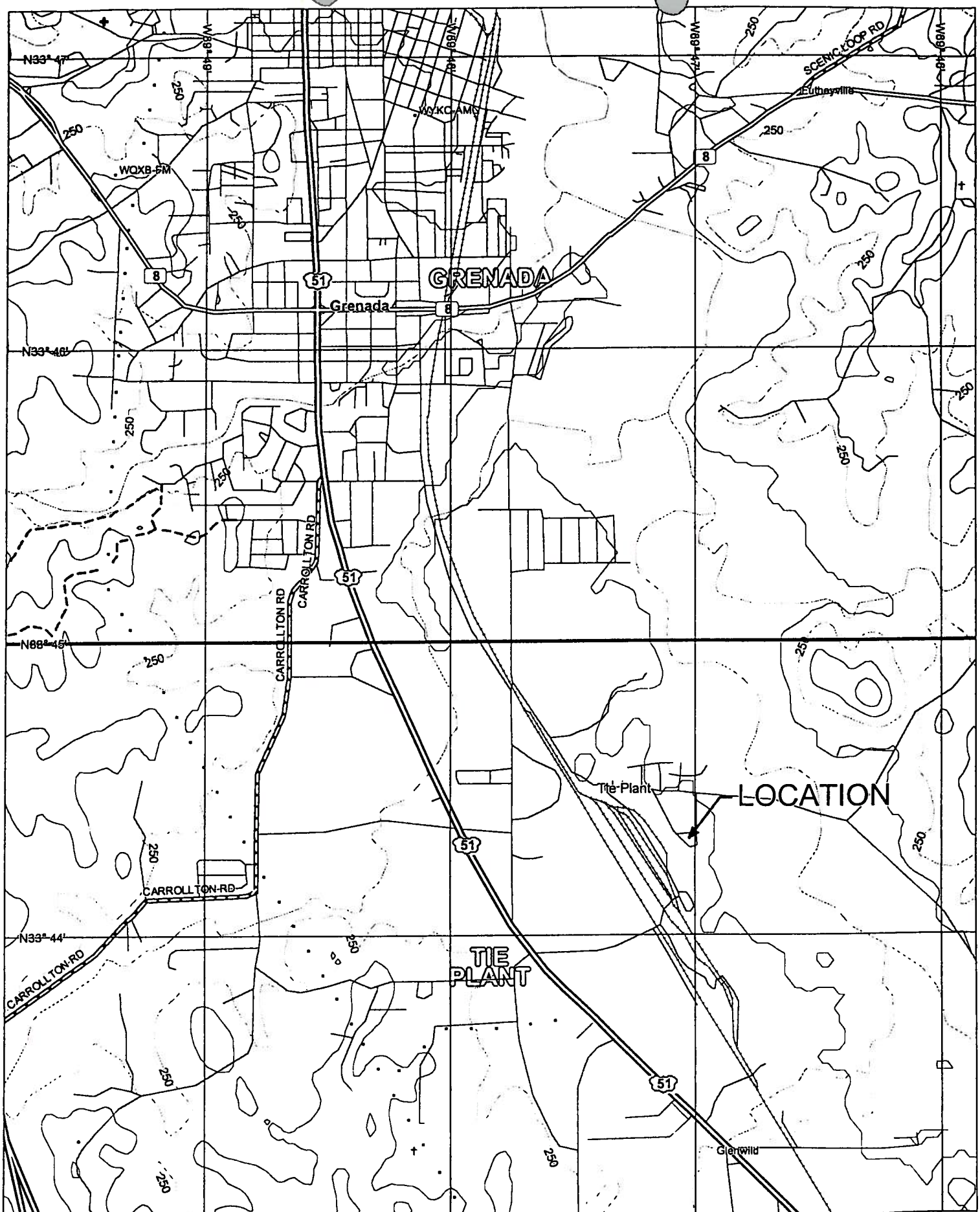

3-D TopoQuads Copyright © 1999 DeLorme Yarmouth, ME 04096 1000 ft Scale: 1 : 31,250 Detail: 12-3 Datum: NAD27

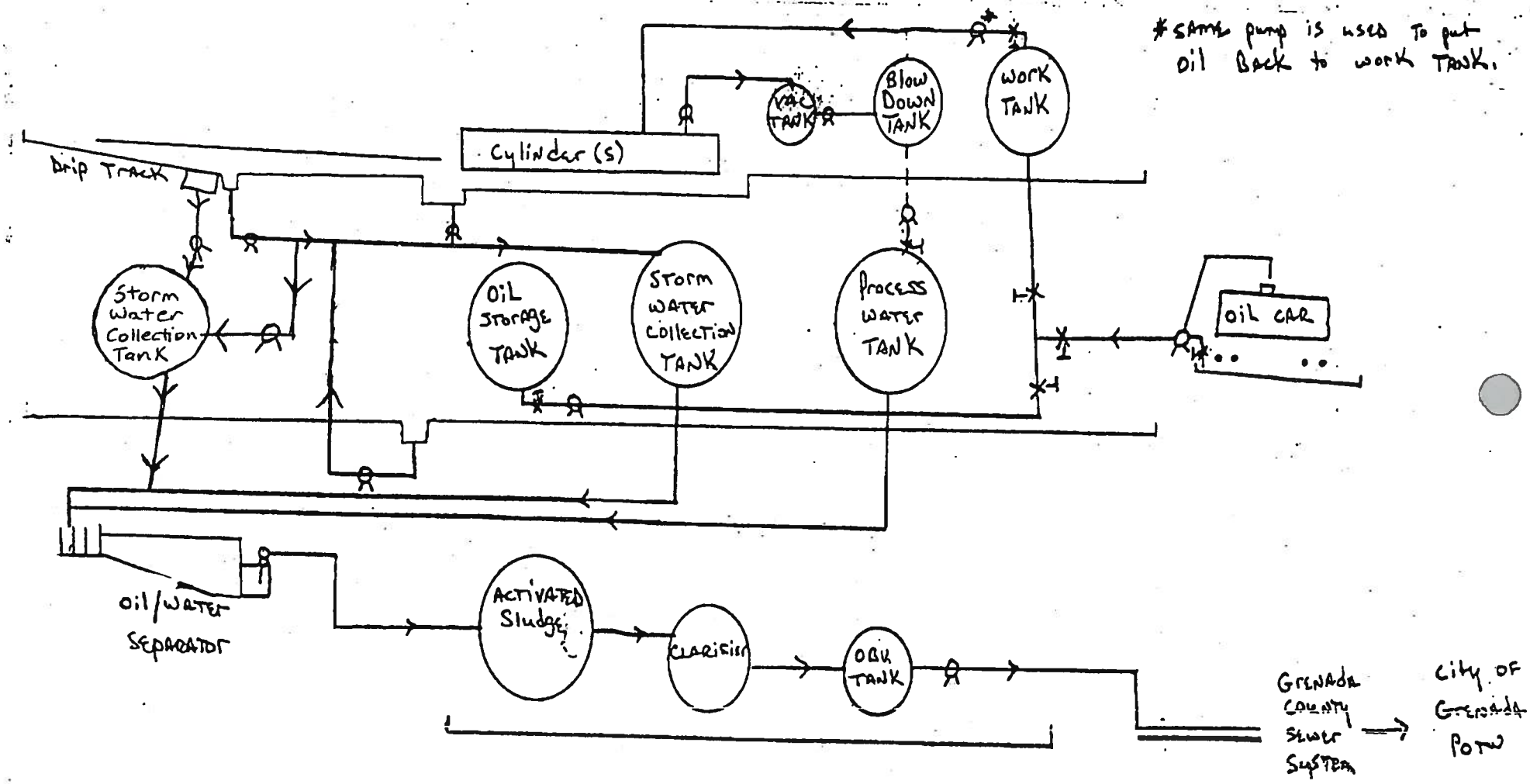

= valves

= pumps

Koppers Industries, Inc
P.O. Box 160
Tie Plant, Ms 38960
Located South of
Grenada, Ms

INDUSTRY CATEGORY	GC/MS FRACTION Volatile	Acid	Base/Neutral	Pesticide
Adhesives and sealants	X	X	X	-
Aluminum forming	X	X	X	-
Auto and other laundries	X	X	X	X
Battery manufacturing	X	-	X	-
Coal mining	-	-	-	-
Coil coating	X	X	X	-
Copper forming	X	X	X	-
Electric and electronic compounds	X	X	X	X
Electroplating	X	X	X	-
Explosives manufacturing	-	X	X	-
Foundries	X	X	X	-
Gum and wood chemicals				
Tall oil rosin (subpart D)	X	X	X	-
Rosin based derivatives subpart F)	X	X	X	-
All other subparts	X	X	-	-
Inorganic chemicals manufacturing	X	X	X	-
Iron and steel manufacturing	X	X	X	-
Leather tanning and finishing	X	X	X	-
Mechanical products manufacturing	X	X	X	-
Nonferrous metals manufacturing	X	X	X	X
Ore mining (applies to the base and precious metals/subpart B)	-	X	-	-
Organic chemicals manufacturing	X	X	X	X
Paint and ink formulation	X	X	X	-
Pesticides	X	X	X	X
Petroleum refining	X	-	-	-
Pharmaceutical preparations	X	X	X	-
Photographic equipment and supplies	X	X	X	-
Plastic and synthetic materials mfg.	X	X	X	X
Plastic processing	X	-	-	-
Porcelain enameling	-	-	-	-
Printing and publishing	X	X	X	X
Pulp and paperboard mills				
Unbleached Kraft (subpart A)	2	X	2	X
Semi-chemical (subpart B)	2	X	2	2
(subpart C)	2	X	2	2
Unbleached Kraft-neutral sulfite semi-chemical (cross recovery) (subpart D)	2	X	2	2
Paperboard from wastepaper (subpart E)	X	X	2	X
Dissolving Kraft (subpart F)	X	X	2	2
Market bleached Kraft (subpart G)	X	X	2	2
BCT bleached Kraft (subpart H)	X	X	2	2
Fine bleached Kraft (subpart I)	X	X	2	2
Papergrade sulfite (subpart J)	X	X	X	2
Dissolving sulfite pulp (subpart K)	X	X	2	2
Groundwood-chemical-mechanical (subpart L)	X	X	2	2
Groundwood-termo-mechnical (subpart M)	X	X	2	2
Groundwood-CMN papers (subpart N)	X	X	2	2
Groundwood-fine papers (subpart O)	X	X	2	2
Soda (subpart P)	X	X	2	2
Deink (subpart Q)	X	X	2	X
Nonintegrated-fine papers (subpart R)	2	X	2	2
Nonintegrated-tissue papers (subpart S)	X	X	2	X
Tissue from wastepaper (subpart T)	X	X	2	X
Papergrade sulfite (subpart U)	X	X	X	2
All other subparts (V through Z)	Determined case by case, unless superseded by regulation.			
Rubber processing	X	X	X	-
Soap and detergent manufacturing	X	X	X	-
Steam electric power plants	X	X	-	-
Textile mills	X	X	X	-
Timber products processing	X	X	X	X

2 - Do not test unless "reason to believe" it is discharged.

INDUSTRY CATEGORY	GC/MS FRACTION Volatile	Acid	Base/Neutral	Pesticide
Adhesives and sealants	X	X	X	-
Aluminum forming	X	X	X	-
Auto and other laundries	X	X	X	X
Battery manufacturing	X	-	X	-
Coal mining	-	-	-	-
Coil coating	X	X	X	-
Copper forming	X	X	X	-
Electric and electronic compounds	X	X	X	X
Electroplating	X	X	X	-
Explosives manufacturing	-	X	X	-
Foundries	X	X	X	-
Gum and wood chemicals				
Tall oil rosin (subpart D)	X	X	X	-
Rosin based derivatives subpart F)	X	X	X	-
All other subparts	X	X	-	-
Inorganic chemicals manufacturing	X	X	X	-
Iron and steel manufacturing	X	X	X	-
Leather tanning and finishing	X	X	X	-
Mechanical products manufacturing	X	X	X	-
Nonferrous metals manufacturing	X	X	X	X
Ore mining (applies to the base and precious metals/subpart B)	-	X	-	-
Organic chemicals manufacturing	X	X	X	X
Paint and ink formulation	X	X	X	-
Pesticides	X	X	X	X
Petroleum refining	X	-	-	-
Pharmaceutical preparations	X	X	X	-
Photographic equipment and supplies	X	X	X	-
Plastic and synthetic materials mfg.	X	X	X	X
Plastic processing	X	-	-	-
Porcelain enameling	-	-	-	-
Printing and publishing	X	X	X	X
Pulp and paperboard mills				
Unbleached Kraft (subpart A)	2	X	2	X
Semi-chemical (subpart B)	2	X	2	2
(subpart C)	2	X	2	2
Unbleached Kraft-neutral sulfite semi-chemical (cross recovery) (subpart D)	2	X	2	2
Paperboard from wastepaper (subpart E)	X	X	2	X
Dissolving Kraft (subpart F)	X	X	2	2
Market bleached Kraft (subpart G)	X	X	2	2
BCT bleached Kraft (subpart H)	X	X	2	2
Fine bleached Kraft (subpart I)	X	X	2	2
Papergrade sulfite (subpart J)	X	X	X	2
Dissolving sulfite pulp (subpart K)	X	X	2	2
Groundwood-chemical-mechanical (subpart L)	X	X	2	2
Groundwood-termo-mechnical (subpart M)	X	X	2	2
Groundwood-CMN papers (subpart N)	X	X	2	2
Groundwood-fine papers (subpart O)	X	X	2	2
Soda (subpart P)	X	X	2	2
Deink (subpart Q)	X	X	2	X
Nonintegrated-fine papers (subpart R)	2	X	2	2
Nonintegrated-tissue papers (subpart S)	X	X	2	X
Tissue from wastepaper (subpart T)	X	X	2	X
Papergrade sulfite (subpart U)	X	X	X	2
All other subparts (V through Z)	Determined case by case, unless superseded by regulation.			
Rubber processing	X	X	X	-
Soap and detergent manufacturing	X	X	X	-
Steam electric power plants	X	X	-	-
Textile mills	X	X	X	-
Timber products processing	X	X	X	X

2 - Do not test unless "reason to believe" it is discharged.

COLUMBIA ANALYTICAL SERVICES, INC.

Analytical Report

Client: HSI GeoTrans, Inc.
Project: Beazer East/TIE Plant, MS/N913-202
Sample Matrix: Water

Service Request: K2001380
Date Collected: 2/28/00
Date Received: 2/29/00
Date Extracted: NA

Inorganic Parameters
Units: mg/L (ppm)

Analyte:	pH (units)	Biochemical Oxygen Demand (5-Day)	Phenolics, Total
EPA Method:	150.1	405.1	420.1
Method Reporting Limit:	-	4	0.01
Date Analyzed:	2/29/00	2/29/00	3/4/00

Sample Name	Lab Code			
TS1-C1	K2001380-001	6.48 ✓	88 ✓	0.11 ✓
Method Blank	K2001380-MB	-	-	ND
Limit		5.5 - 9.5 ✓	240	3

Approved By:

Date:

3ADW/061694

COLUMBIA ANALYTICAL SERVICES, INC.

Analytical Report

Client: HSI GeoTrans, Inc.
Project: Beazer East/TIE Plant, MS/N913-202
Sample Matrix: Water

Service Request: K2001380
Date Collected: 2/28/00
Date Received: 2/29/00
Date Extracted: 3/7/00
Date Analyzed: 3/7/00

Oil and Grease
EPA Method 413.1
Units: mg/L (ppm)

Sample Name	Lab Code	MRL	Result
TS1-C1	K2001380-001	5	ND ✓
Method Blank	K000307-WB	5	ND
Limit			100

Approved By: _____ Date: _____

1AMRL2102594

COLUMBIA ANALYTICAL SERVICES, INC.

Analytical Report

Client: HSI GeoTrans, Inc.
Project: Beazer East/TIE Plant, MS/N913-202
Sample Matrix: Water

Service Request: K2001380
Date Collected: 2/28/00
Date Received: 2/29/00

Chlorinated Phenols

Sample Name: TS1-C1
Lab Code: K2001380-001
Test Notes:

Units: ug/L (ppb)
Basis: NA

Analyte	Prep Method	Analysis Method	MRL	Dilution Factor	Date Extracted	Date Analyzed	Result	Result Notes
Tetrachlorophenols, Total	EPA 3510B	8151M	0.50	1	3/3/00	3/4/00	9.3	
Pentachlorophenol	EPA 3510B	8151M	5.0	10	3/3/00	3/4/00	80 ✓	C
Limit							180	

C The MRL is elevated because the sample required diluting.

Approved By: Date:

1522/052595

COLUMBIA ANALYTICAL SERVICES, INC.

Analytical Report

Client: HSI GeoTrans, Inc.
Project: Beazer East, Tie Plant, MS/N913-201
Sample Matrix: Water

Service Request: K2000227
Date Collected: 1/11/00
Date Received: 1/12/00
Date Extracted: 1/13/00
Date Analyzed: 1/13/00

Chlorinated Phenols
EPA Methods 8151 Modified
Units: µg/L (ppb)

Analyte:	Total Tetrachlorophenols	Pentachlorophenol
Method Reporting Limit:	0.5	0.5
Sample Name	**Lab Code**	
TS2-C2	K2000227-001	ND	0.9 ✓
Method Blank	K200113-WB	ND	ND
Limit			180

Approved By: _____ Date: _____

2A/10/094

COLUMBIA ANALYTICAL SERVICES, INC.

Analytical Report

Client: HSI GeoTrans, Inc.
Project: Beazer East, Tie Plant, MS/N913-201
Sample Matrix: Water

Service Request: K2000227
Date Collected: 1/11/00
Date Received: 1/12/00
Date Extracted: NA

Inorganic Parameters
Units: mg/L (ppm)

Analyte:	pH (units)	Biochemical Oxygen Demand (5-Day)	Phenolics, Total
EPA Method:	150.1	405.1	420.1
Method Reporting Limit:	-	4	0.01
Date Analyzed:	1/12/00	1/12/00	1/17/00

Sample Name	Lab Code			
TS2-C2	K2000227-001	7.98 ✓	21 ✓	0.03 ✓
Method Blank	K2000227-MB	-	-	ND
Limit		5.5-9.5	240	3

Approved By:

Date:

3ADW/061694

COLUMBIA ANALYTICAL SERVICES, INC.

Analytical Report

Client: HSI GeoTrans, Inc.
Project: Beazer East, Tie Plant, MS/N913-201
Sample Matrix: Water

Service Request: K2000227
Date Collected: 1/11/00
Date Received: 1/12/00
Date Extracted: 1/18/00
Date Analyzed: 1/18/00

Oil and Grease
EPA Method 413.1
Units: mg/L (ppm)

Sample Name	Lab Code	MRL	Result
TS2-C2	K2000227-001	5	ND ✓
Method Blank	K200118-WB	5	ND
Limit			100

Approved By: _____ Date: _____

1AMRL2102594

COLUMBIA ANALYTICAL SERVICES, INC.

Analytical Report

Client: HSI GeoTrans, Inc.
Project: Beazer East, Tie Plant, MS/N913-201
Sample Matrix: Water

Service Request: K2000227
Date Collected: 1/11/00
Date Received: 1/12/00
Date Extracted: 1/13/00
Date Analyzed: 1/13/00

Chlorinated Phenols
EPA Methods 8151 Modified
Units: µg/L (ppb)

Analyte:	Total Tetrachlorophenols	Pentachlorophenol
Method Reporting Limit:	0.5	0.5
Sample Name	**Lab Code**	
TS2-C2	K2000227-001	ND	0.9 ✓
Method Blank	K200113-WB	ND	ND
Limit			180

Approved By: _____ Date: _____

COLUMBIA ANALYTICAL SERVICES, INC.

Analytical Report

Client: HSI GeoTrans, Inc.
Project: Beazer East, Tie Plant, MS/N913-201
Sample Matrix: Water

Service Request: K2000227
Date Collected: 1/11/00
Date Received: 1/12/00
Date Extracted: NA

Inorganic Parameters
Units: mg/L (ppm)

Analyte:	pH (units)	Biochemical Oxygen Demand (5-Day)	Phenolics, Total
EPA Method:	150.1	405.1	420.1
Method Reporting Limit:	-	4	0.01
Date Analyzed:	1/12/00	1/12/00	1/17/00

Sample Name	Lab Code			
TS2-C2	K2000227-001	7.98 ✓	21 ✓	0.03 ✓
Method Blank	K2000227-MB	-	-	ND
Limit		5.5-9.5	240	3

Approved By:

Date:

JAE\W\061694

COLUMBIA ANALYTICAL SERVICES, INC.

Analytical Report

Client: HSI GeoTrans, Inc.
Project: Beazer East, Tie Plant, MS/N913-201
Sample Matrix: Water

Service Request: K2000227
Date Collected: 1/11/00
Date Received: 1/12/00
Date Extracted: 1/18/00
Date Analyzed: 1/18/00

Oil and Grease
EPA Method 413.1
Units: mg/L (ppm)

Sample Name	Lab Code	MRL	Result
TS2-C2	K2000227-001	5	ND ✓
Method Blank	K200118-WB	5	ND
Limit			100

Approved By: _____ Date: _____

1AMKI 2/02/00

BUREAU OF POLLUTION CONTROL
SAMPLE REQUEST FORM

Lab Report No. _____

I. GENERAL INFORMATION: Facility Name: Kopper's Industries, Inc.

County Code: 043 - Grenada — NPDES Permit No.: MSP0 90800

Discharge No.: 001 — Date Requested: Nov 1999

Sample Point Identification: _____ — Total Facility Discharge: _____

Requested By: _____ — Data To: Ross Tality

Type of Sample: Grab (X) Composite (Flow) (Time X) Other ( )

II. SAMPLE IDENTIFICATION: Collected By: LYNNE BURRELL

Environment Condition: _____

Where Taken: EFFLUENT ACCESS PORT

	Type	Parameters		Preservative	Date	Time
1.	Composite	BOD, SS		CHILL	11-16-99	1140
2.	Composite	Cu, Cr, As		HNO_3 pH<2	11-16-99	1140
3.	Grab	Phenols	1 qt	H_2SO_4 pH<2	11-16-99	1140
4.	Grab	Pentachlorophenol	3 qt	CHILL	11-16-99	1140
5.	Grab	Oil & Grease		HCl pH<2	11-16-99	1140

III. FIELD:

Analysis	Computer Code	Request	Results	Analyst	Date
pH	(000400)	(X)	7.9 @ 23°C	L.B.	11-16-99
D.O.	(000300)	( )			
Temperature	(000010)	( )			
Residual Chlorine	(050060)	( )			
Flow	(074060)	(X)	.016200 MGD	L.B.	11-16-99

IV. TRANSPORTATION OF SAMPLE: Bus ( ) RO Vehicle ( ) Other (X) Douglas, Inc.

Date: 11-17-99 Time: 0950

V. LABORATORY: Received By: Kot Lewis

Recorded By: _____ Date Sent to State Office: _____

Analysis	Computer Code	Request	Result		Analyst	Date Measured
BOD5	(000310)	(X)	11.0	mg/l	MM	* 11-18-99
COD	(000340)	( )		mg/l		
TOC	(000680)	( )		mg/l		
Suspended Solids	(099000)	(X)	190.0	mg/l	MM	11-23-99
TKN	(000625)	( )		mg/l		
Ammonia-N	(000610)	( )		mg/l		
Fecal Coliform(1)	(074055)	( )		colonies/100 ml		*
Fecal Coliform(2)	(074055)	( )		colonies/100 ml		*
Total Phosphorus	(000665)	( )		mg/l		
Oil and Grease(1)	(000550)	(X)	<5.0	mg/l	KF	11-18-99
Oil and Grease(2)	(000550)	( )		mg/l		
Chlorides	(099016)	( )		mg/l		
Phenol	(032730)	(X)	0.031	mg/l	KF	12-3-99
Total Chromium	(001034)	( )		mg/l		
Hex. Chromium	(001032)	( )		mg/l		
Zinc	(001092)	( )		mg/l		
Copper	(001042)	( )		mg/l		
Lead	(017501)	( )		mg/l		
Cyanide	(000722)	( )		mg/l		
		( )				
		( )				
		( )				
		( )				
		( )				
		( )				
		( )				
		( )				
		( )				
		( )				

Remarks: 5700

*Date of Test Initiation

AI # 876 3217

TARGET COMPOUND LIST
WET CHEMISTRY PARAMETERS

Lab Bench No.: 3217

Analysis	Computer Code	Req	Result		Analyst	Date Measured or Date Test Initiated
BOD	000310	X	11.0	mg/l	MM	11-18-99
COD	000340			mg/l		
TOC	000680			mg/l		
Suspended Solids	099000	X	190.0	mg/l	MM	11-23-99
TKN	000625			mg/l		
Ammonia-N	000610			mg/l		
Fecal Coliform	074055			colonies/100ml		
Total Phosphorous	000665			mg/l		
Oil & Grease	000550	X	< 5.0	mg/l	KF	11-18-99
Chlorides	099016			mg/l		
Phenol	032730	X	0.031	mg/l	KF	12-3-99
Cyanide	000722			mg/l		
Nitrate-Nitrite	000630			mg/l		
Alkalinity	000410			mg/l		
Hardness	000900			mg/l		

SAMPLE REQUEST FORM

Lab Bench No.: 3217
Cost Code: 3700

I. GENERAL INFORMATION:

Facility Name: Kopper's Industries, Inc.
County Code: 043 - Grenada
Discharge No: 001
Sample Point Identification: Total Facility Discharge
Requested By: Compliance Monitoring
Type of Sample: Grab: (X) Composite: Flow:

NPDES Permit No.90300
Date Requested: 11/99

Data To: Russ Twitty
Time: (X) Other:

II. SAMPLE IDENTIFICATION:

Environment Condition:
Where Taken: Effluent Access Port

Collected By: L. Burrell

	Type	Parameters	Preservative	Date	Time
1.	Composite	BOD, SS	Chill	11/16/99	1140
2.	Composite	Cu, Cr, As	HNO_3 pH < 2	11/16/99	1140
3.	Grab	Phenols 1 Bot	H_2SO_4 pH < 2	11/16/99	1140
4.	Grab	Pentachlorophenols 3 Bot	Chill	11/16/99	1140
5.	Grab	O & G	HCL pH < 2	11/16/99	1140
6.					

III. FIELD:

Analysis	Computer Code	Req	Results	Analyst	Date
pH	000400	X	7.9 @ 23º C	LB	11-16-99
D.O.	000300				
Temperature	000010				
ResidualChlorine	050060				
Flow	074060	X	.016200 MGD	LB	11-16-99

IV. TRANSPORTATION OF SAMPLE:

Bus: RO Vehicle: Other: Douglas, Inc.

V. LABORATORY:

Received by: Dot Lewis
Recorded by: T. Sawyer

Date: 11-17-99 Time: 0930
Date Sent to State Office: 8-22-00

Remark:.

INORGANICS REPORT
WATER

SAMPLE No.: 3217

ANALYSES:_____ **DATE COLLECTED:**_____

PARAMETER	CONC. ug/l	MQL ug/l	QC %Rec.	Analyst	Date
Arsenic	ND	5.0	98	JC	12-28-99
Chromium	5.4	1.0	100	JC	12-28-99
Copper	34.0	5.0	104	JC	12-28-99
Zinc	26.2	10	100	JC	12-28-99

MQL = minimum quantifiable levels
QC %Rec = percent recovery of quality control standard

MSDEQ Lab
1542 Old Whitfield Rd.
Jackson, MS 39208

Sample # 3217

Site: Kopper's Industries Inc.
Sample Date: 11/16/99

Analysis of
Pentachlorophenol
in Water

Compound	Conc. (ug/L)	MQL (ug/L)
Pentachlorophenol	**None Detected**	50

Surrogates	Limits	% Recoveries
1) 2-Fluorophenol	(21 - 100)	36
2) Phenol-d5	(10 - 94)	41
3) 2,4,6-Tribromophenol	(10 - 123)	41

Comments:

This analysis was for PCP only.

COLUMBIA ANALYTICAL SERVICES, INC.

Analytical Report

Client: Beazer East, Inc.
Project: Tie Plant, MS/N913-201
Sample Matrix: Water

Service Request: K9908228
Date Collected: 11/15/99
Date Received: 11/16/99
Date Extracted: 11/16/99
Date Analyzed: 11/18/99

Chlorinated Phenols
EPA Methods 8151 Modified
Units: µg/L (ppb)

	Analyte:	2,4,6-Trichlorophenol	Total Tetrachlorophenols	Pentachlorophenol
	Method Reporting Limit:	0.5	0.5	0.5
Sample Name	**Lab Code**			
TS-2-C3	K9908228-001	ND	ND	ND ✓
Method Blank	K991116-WB	ND	ND	ND
Limit				180

Approved By: _____ Date: _____

COLUMBIA ANALYTICAL SERVICES, INC.

Analytical Report

Client: Beazer East, Inc.
Project: Tie Plant, MS/N913-201
Sample Matrix: Water

Service Request: K9908228
Date Collected: 11/15/99
Date Received: 11/16/99
Date Extracted: NA

Inorganic Parameters
Units: mg/L (ppm)

Analyte:	pH (units)	Biochemical Oxygen Demand (5-Day)	Phenolics, Total
EPA Method:	150.1	405.1	420.1
Method Reporting Limit:	-	4	0.01
Date Analyzed:	11/16/99	11/17/99	11/20/99
Sample Name / **Lab Code**			
TS-2-C3 / K9908228-001	6.74 ✓	ND ✓	ND ✓
Method Blank / K9908228-MB	-	-	ND
Limit	5.5 - 9.5	240	3

Approved By: Date:

3ADW061694

COLUMBIA ANALYTICAL SERVICES, INC.

Analytical Report

Client: Beazer East, Inc.
Project: Tie Plant, MS/N913-201
Sample Matrix: Water

Service Request: K9908228
Date Collected: 11/15/99
Date Received: 11/16/99
Date Extracted: 11/23/99
Date Analyzed: 11/24/99

Oil and Grease
EPA Method 413.1
Units: mg/L (ppm)

Sample Name	Lab Code	MRL	Result
TS-2-C3	K9908228-001	5	7 ✓
Method Blank	K991123-WB	5	ND
Limit			100

Approved By: _____ Date: _____

COLUMBIA ANALYTICAL SERVICES, INC.

Analytical Report

Client: Beazer East, Inc
Project: Tie Plant, MS/N913-201
Sample Matrix: Water

Service Request: K9908228
Date Collected: 11/15/99
Date Received: 11/16/99
Date Extracted: 11/16/99
Date Analyzed: 11/18/99

Chlorinated Phenols
EPA Methods 8151 Modified
Units: µg/L (ppb)

Sample Name	Lab Code	2,4,6-Trichlorophenol	Total Tetrachlorophenols	Pentachlorophenol
Analyte				
Method Reporting Limit		0.5	0.5	0.5
TS-2-C3	K9908228-001	ND	ND	ND ✓
Method Blank	K991116-WB	ND	ND	ND
Limit				180

Approved By: _____ Date: _____

COLUMBIA ANALYTICAL SERVICES, INC.

Analytical Report

Client: Beazer East, Inc.
Project: Tie Plant, MS/N913-201
Sample Matrix: Water

Service Request: K9908228
Date Collected: 11/15/99
Date Received: 11/16/99
Date Extracted: NA

Inorganic Parameters
Units: mg/L (ppm)

Analyte:	pH (units)	Biochemical Oxygen Demand (5-Day)	Phenolics, Total
EPA Method:	150.1	405.1	420.1
Method Reporting Limit:	-	4	0.01
Date Analyzed:	11/16/99	11/17/99	11/20/99

Sample Name	Lab Code			
TS-2-C3	K9908228-001	6.74 ✓	ND ✓	ND ✓
Method Blank	K9908228-MB	-	-	ND
Limit		5.5 - 9.5	240	3

Approved By:
JAE/W/061694

Date:

COLUMBIA ANALYTICAL SERVICES, INC.

Analytical Report

Client: Beazer East, Inc
Project: Tie Plant, MS/N913-201
Sample Matrix: Water

Service Request: K9908228
Date Collected: 11/15/99
Date Received: 11/16/99
Date Extracted: 11/23/99
Date Analyzed: 11/24/99

Oil and Grease
EPA Method 413.1
Units: mg/L (ppm)

Sample Name	Lab Code	MRL	Result
TS-2-C3	K9908228-001	5	7 ✓
Method Blank	K991123-WB	5	ND
Limit			100

Approved By: _____ Date: _____

COLUMBIA ANALYTICAL SERVICES, INC.

Analytical Report

Client:	HSI GeoTrans, Inc.	**Service Request:**	K9907836
Project:	Beazer East, Tie Plant, MS/N913-201	**Date Collected:**	11/1/99
Sample Matrix:	Water	**Date Received:**	11/2/99

Pentachlorophenol (PCP)

Prep Method:	EPA 3510B	Units:	ug/L (ppb)
Analysis Method:	8151M	Basis:	NA
Test Notes:			

Sample Name	Lab Code	MRL	Dilution Factor	Date Extracted	Date Analyzed	Result	Result Notes
TS-1-C1	K9907836-001	0.5	1	11/8/99	11/11/99	ND ✓	
Method Blank	K991108-WB	0.5	1	11/8/99	11/11/99	ND	
Limit						180	

Approved By: K Rosson Date: 11/12/99

COLUMBIA ANALYTICAL SERVICES, INC.

Analytical Report

Client: HSI GeoTrans, Inc.
Project: Beazer East, Tie Plant, MS/N913-201
Sample Matrix: Water

Service Request: K9907836
Date Collected: 11/1/99
Date Received: 11/2/99
Date Extracted: NA

Inorganic Parameters
Units: mg/L (ppm)

Analyte:	pH (units)	Biochemical Oxygen Demand (5-Day)	Phenolics, Total
EPA Method:	150.1	405.1	420.1
Method Reporting Limit:	-	4	0.01
Date Analyzed:	11/2/99	11/3/99	11/5/99
Sample Name / **Lab Code**			
TS-1-C1 / K9907836-001	6.98 ✓	ND ✓	0.02 ✓
Method Blank / K9907836-MB	-	-	ND
Limit	5.5 -9.5	240	3

Approved By: _____ Date: 11-9-99

07836WET.LJ1 - 3_Tests 11/9/99

COLUMBIA ANALYTICAL SERVICES, INC.

Analytical Report

Client: HSI GeoTrans, Inc.
Project: Beazer East, Tie Plant, MS/N913-201
Sample Matrix: Water

Service Request: K9907836
Date Collected: 11/1/99
Date Received: 11/2/99
Date Extracted: 11/8/99
Date Analyzed: 11/8/99

Oil and Grease
EPA Method 413.1
Units: mg/L (ppm)

Sample Name	Lab Code	MRL	Result
TS-1-C1	K9907836-001	5	ND ✓
Method Blank	K991108-WB	5	ND
Limit			100

Approved By: K Rescomo Date: 11/9/99

1AMRL/102594
07836PHC.KH1 - 413w 11/8/99

COLUMBIA ANALYTICAL SERVICES, INC.

Analytical Report

Client: HSI GeoTrans, Inc.
Project: Beazer East, Tie Plant, MS/N913-201
Sample Matrix: Water

Service Request: K9907836
Date Collected: 11/1/99
Date Received: 11/2/99

Pentachlorophenol (PCP)

Prep Method: EPA 3510B
Analysis Method: 8151M
Test Notes:

Units: ug/L (ppb)
Basis: NA

Sample Name	Lab Code	MRL	Dilution Factor	Date Extracted	Date Analyzed	Result	Result Notes
TS-1-C1	K9907836-001	0.5	1	11/8/99	11/11/99	ND ✓	
Method Blank	K991108-WB	0.5	1	11/8/99	11/11/99	ND	
Limit						180	

Approved By: K Reason Date: 11/12/99

1A/092595
07836PHC.MS1 - Sample 11/13/99

COLUMBIA ANALYTICAL SERVICES, INC.

Analytical Report

Client: HSI GeoTrans, Inc.
Project: Beazer East, Tie Plant, MS/N913-201
Sample Matrix: Water

Service Request: K9907836
Date Collected: 11/1/99
Date Received: 11/2/99
Date Extracted: NA

Inorganic Parameters
Units: mg/L (ppm)

Analyte:	pH (units)	Biochemical Oxygen Demand (5-Day)	Phenolics, Total
EPA Method:	150.1	405.1	420.1
Method Reporting Limit:	-	4	0.01
Date Analyzed:	11/2/99	11/3/99	11/5/99
Sample Name / **Lab Code**			
TS-1-C1 / K9907836-001	6.98 ✓	ND ✓	0.02 ✓
Method Blank / K9907836-MB	-	-	ND
Limit	5.5-9.5	240	3

Approved By: _____ Date: 11-9-99

07836WET.LJ1 - 3_Tab 11/9/99

COLUMBIA ANALYTICAL SERVICES, INC.

Analytical Report

Client: HSI GeoTrans, Inc.
Project: Beazer East, Tie Plant, MS/N913-201
Sample Matrix: Water

Service Request: K9907836
Date Collected: 11/1/99
Date Received: 11/2/99
Date Extracted: 11/8/99
Date Analyzed: 11/8/99

Oil and Grease
EPA Method 413.1
Units: mg/L (ppm)

Sample Name	Lab Code	MRL	Result
TS-1-C1	K9907836-001	5	ND ✓
Method Blank	K991108-WB	5	ND
Limit			100

Approved By: K Reason Date: 11/9/99

1AMRL/102594
07836PHC.KHI - 413w 11/8/99

COLUMBIA ANALYTICAL SERVICES, INC.

Analytical Report

Client:	HSI GeoTrans	**Service Request:**	K9906500
Project:	Beazer East/TIE Plant, MS/N913-202	**Date Collected:**	9/20/99
Sample Matrix:	Water	**Date Received:**	9/21/99
		Date Extracted:	NA

Inorganic Parameters
Units: mg/L (ppm)

Analyte:	pH (units)	Biochemical Oxygen Demand (5-Day)	Phenolics, Total
EPA Method:	150.1	405.1	420.1
Method Reporting Limit:	-	4	0.01
Date Analyzed:	9/21/99	9/22/99	9/24/99

Sample Name	Lab Code			
Treatment System	K9906500-001	6.90 ✓	18 ✓	0.47 ✓
Method Blank	K9906500-MB	-	-	ND
Limits		5.5 - 9.0	240	3

Approved By: Date:

3ADW/061694

COLUMBIA ANALYTICAL SERVICES, INC.

Analytical Report

Client: HSI GeoTrans
Project: Beazer East/TIE Plant, MS/N913-202
Sample Matrix: Water

Service Request: K9906500
Date Collected: 9/20/99
Date Received: 9/21/99

Pentachlorophenol (PCP)

Prep Method: EPA 3510B
Analysis Method: 8151M
Test Notes:

Units: ug/L (ppb)
Basis: NA

Sample Name	Lab Code	MRL	Dilution Factor	Date Extracted	Date Analyzed	Result	Result Notes
Treatment System	K9906500-001	5	10	9/27/99	9/28/99	130	C
Method Blank	K990927-WB	0.5	1	9/27/99	9/28/99	ND	
Limit						180	

C The MRL is elevated because the sample required diluting.

Approved By: _____ Date: _____

1A/052595

COLUMBIA ANALYTICAL SERVICES, INC.

Analytical Report

Client: HSI GeoTrans
Project: Beazer East/TIE Plant, MS/N913-202
Sample Matrix: Water

Service Request: K9906500
Date Collected: 9/20/99
Date Received: 9/21/99
Date Extracted: 9/24/99
Date Analyzed: 9/24/99

Oil and Grease
EPA Method 413.1
Units: mg/L (ppm)

Sample Name	Lab Code	MRL	Result
Treatment System	K9906500-001	5	12 ✓
Method Blank	K990924-WB	5	ND
Limit			100

Approved By: _____ Date: _____

1AMRL/102594

COLUMBIA ANALYTICAL SERVICES, INC.

Analytical Report

Client: HSI GeoTrans
Project: Beazer East/TIE Plant, MS/N913-202
Sample Matrix: Water

Service Request: K9906311
Date Collected: 9/13/99
Date Received: 9/14/99

Pentachlorophenol

Sample Name: Beazer East Treatment Syst.
Lab Code: K9906311-001
Test Notes:

Units: ug/L (ppb)
Basis: NA

Analyte	Prep Method	Analysis Method	MRL	Dilution Factor	Date Extracted	Date Analyzed	Result	Result Notes
Pentachlorophenol	EPA 3510B	8151M	0.5	1	9/20/99	9/21/99	ND ✓	
			Limit				180	

Approved By:

Date:

1522/052595

COLUMBIA ANALYTICAL SERVICES, INC.

Analytical Report

Client:	HSI GeoTrans	**Service Request:**	K9906311
Project:	Beazer East/TIE Plant, MS/N913-202	**Date Collected:**	9/13/99
Sample Matrix:	Water	**Date Received:**	9/14/99
		Date Extracted:	NA

Inorganic Parameters
Units: mg/L (ppm)

Analyte:	pH (units)	Biochemical Oxygen Demand (5-Day)	Phenolics, Total
EPA Method:	150.1	405.1	420.1
Method Reporting Limit:	-	4	0.01
Date Analyzed:	9/14/99	9/15/99	9/17/99

Sample Name	Lab Code			
Beazer East Treatment Syst.	K9906311-001	6.72 ✓	ND ✓	0.09 ✓
Method Blank	K9906311-MB	-	-	ND
Limits		5.5 - 9.0	240	3

Approved By: Date:

3ADW/061694

COLUMBIA ANALYTICAL SERVICES, INC.

Analytical Report

Client: HSI GeoTrans
Project: Beazer East/TIE Plant, MS/N913-202
Sample Matrix: Water

Service Request: K9906311
Date Collected: 9/13/99
Date Received: 9/14/99
Date Extracted: 9/21/99
Date Analyzed: 9/21/99

Oil and Grease
EPA Method 413.1
Units: mg/L (ppm)

Sample Name	Lab Code	MRL	Result
Beazer East Treatment Syst.	K9906311-001	5	ND ✓
Method Blank	K990921-WB	5	ND
Limit			100

Approved By: _____ Date: _____

1AMRL/102594

COLUMBIA ANALYTICAL SERVICES, INC.

Analytical Report

Client: HSI GeoTrans
Project: Beazer East/Tie Plant, MS./N913-202
Sample Matrix: Water

Service Request: K9905677
Date Collected: 8/23/99
Date Received: 8/24/99
Date Extracted: 8/27/99
Date Analyzed: 8/27/99

Oil and Grease
EPA Method 413.1
Units: mg/L (ppm)

Sample Name	Lab Code	MRL	Result
Beazer East Treatment System	K9905677-001	5	ND
Method Blank	K990827-WB	5	ND

Limit = 100 mg/l

Approved By: _____ Date: _____

TAMKI2103494

COLUMBIA ANALYTICAL SERVICES, INC.

Analytical Report

Client:	HSI GeoTrans	**Service Request:**	K9905677
Project:	Beazer East/Tie Plant, MS./N913-202	**Date Collected:**	8/23/99
Sample Matrix:	Water	**Date Received:**	8/24/99

Pentachlorophenol

Sample Name:	Beazer East Treatment System	Units:	ug/L (ppb)
Lab Code:	K9905677-001	Basis:	NA
Test Notes:			

Analyte	Prep Method	Analysis Method	MRL	Dilution Factor	Date Extracted	Date Analyzed	Result	Result Notes
Pentachlorophenol	EPA 3510B	8151M	0.5	1	8/28/99	8/30/99	1.5	

Limit = 0.18 mg/l
180 ug/L

Approved By: Date:

1622/032393

COLUMBIA ANALYTICAL SERVICES, INC.

Analytical Report

Client:	HSI GeoTrans	**Service Request:**	K9905677
Project:	Beazer East/Tie Plant, MS./N913-202	**Date Collected:**	8/23/99
Sample Matrix:	Water	**Date Received:**	8/24/99
		Date Extracted:	NA

Inorganic Parameters
Units: mg/L (ppm)

Analyte:	pH (units)	Biochemical Oxygen Demand (5-Day)	Phenolics, Total
EPA Method:	150.1	405.1	420.1
Method Reporting Limit:	-	4	0.01
Date Analyzed:	8/24/99	8/25/99	8/28/99

Sample Name	Lab Code			
Beazer East Treatment System	K9905677-001	6.62	ND	0.01
Method Blank	K9905677-MB	-	-	ND
Limits		5.5 - 9.0	240 mg/l	3 mg/l

Approved By: Date:

3AE40061694

HSI GEOTRANS
A TETRA TECH COMPANY

46050 Manekin Plz., Ste. 100 ◆ Sterling, VA 20166 ◆ (703) 444-7000 ◆ Fax: (703) 444-1685

FAX TRANSMISSION COVER SHEET

TO: Steve Spengler	Date: 8/9/99
From: Peter Rich	No. Of Pages: (including cover sheet) 3
Fax No.: 601 961 5703	Phone No.:

Notes:

~~Letter attached~~

~~Analytical~~ Analytical results for water from a nearby monitor well attached

IF YOU DO NOT RECEIVE THE NUMBER OF PAGES LISTED ABOVE, PLEASE CALL.

Albany, NY (518) 458-9285 (518) 458-9284 (FAX)	Costa Mesa, CA (714) 513-1415 (714) 513-1278 (FAX)	Milwaukee, WI (414) 792-1282 (414) 792-1310 (FAX)	Sterling, VA (703) 444-7000 (703) 444-1685 (FAX)	Tucson, AZ *(Herb Hoffman)* (520) 825-6518 (520) 825-6394 (FAX)
Ann Arbor, MI (734) 213-4085 (734) 213-5008 (FAX)	Freehold, NJ (732) 409-0344 (732) 409-3020 (FAX)	Puerto Rico (787) 774-8776 (787) 774-8799 (FAX)	Tempe, AZ (602) 839-2800 (602) 839-2828 (FAX)	
Atlanta, GA (770) 642-1000 (770) 642-8808 (FAX)	Harvard, MA (508) 772-7557 (508) 772-6183 (FAX)	Reno, NV (775) 324-5900 (775) 324-5924 (FAX)	Washington *(Gordon Ballantine)* (206) 286-1929	
Canby, OR *(John Collins)* (503) 266-1581	King of Prussia, PA *(John Gee)* (610) 491-9688 (610) 491-9645 (FAX)	Richmond, VA (804) 346-5433 (804) 346-5432	Westminster, CO (303) 426-7501 (303) 426-7780 (FAX)	
Concord, NH *(Theresa Lopez)* (603) 227-9591 (603) 225-4946 (FAX)	Las Vegas, NV (702) 295-2033 (702) 295-2025 (FAX)	Sacramento, CA (916) 853-1800 (916) 853-1860 (FAX)	Tucson, AZ *(Michael Murphy)* (520) 620-6392 (520) 620-6394 (FAX)	

This facsimile contains PRIVILEGED AND CONFIDENTIAL INFORMATION intended only for the use of the Addressee(s) named above. If you are not the intended recipient of this facsimile, or employee or agent responsible for delivering it to the intended recipient, you are hereby notified that any dissemination or copying of this facsimile is strictly prohibited. If you have received this facsimile in error, please immediately notify us by Telephone and return the original facsimile to us at the above address via the U.S. Postal Service. Thank you.

Date: 08/20/96
Time: 17:47:25

HYDRO SEARCH INCORPORATED
BEAZER KOPPERS GRENADA MS
ANALYTICAL RESULTS

Rept: AN0373
Page: 2

Client Sample ID:	PW2-T6	TRIP BLANK			
Job Number & Lab Sample ID:	H96-1828 H6182808	H96-1828 H6182809			
Sample Date:	07/23/96	07/23/96			
Analyte (MG/L)	Result	Result			
DIESEL RANGE ORGANICS -W					
Diesel Range Organics	860	NA			
SURROGATES					
o-Terphenyl	92	NA			
Analyte (UG/L)	Result	Result			
AQUEOUS- 8310 - PAHS					
Acenaphthene	42.0	NA			
Acenaphthylene	37.0	NA			
Anthracene	19.0	NA			
Benzo(a)anthracene	6.60	NA			
Benzo(a)pyrene	3.50	NA			
Benzo(b)fluoranthene	5.10	NA			
Benzo(ghi)perylene	0.0500 U	NA			
Chrysene	0.150 U	NA			
Benzo(k)fluoranthene	1.90	NA			
Dibenzo(a,h)anthracene	0.0300 U	NA			
Fluoranthene	61.0	NA			
Fluorene	36.0	NA			
Indeno(1,2,3-cd)pyrene	0.0500 U	NA			
Naphthalene	230	NA			
Phenanthrene	100	NA			
Pyrene	31.0	NA			
SURROGATES					
Decafluorobiphenyl	160	NA			
Analyte (UG/L)	Result	Result			
AQUEOUS-SW8463 8040 - GRENADA PCP					
Pentachlorophenol	2200	NA			
SURROGATES					
2-Fluorophenol	78.0	NA			
Analyte (UG/L)	Result	Result			
METHOD 8020 - BENZENE AND TOLUENE					
Benzene	600	2.0 U			
Toluene	530	3.0 U			

Indicates Result is Outside QC Limits
NA = Not Applicable

Recra LabNet

Date: 08/20/96
Time: 10:11:01

HYDRO SEARCH INCORPORATED
BEAZER KOPPERS GRENADA MS
ANALYTICAL RESULTS

Rept: AN0373
Page: 2

Client Sample ID:	PW2-T6
Job Number & Lab Sample ID:	N96-1828 N6182808
Sample Date:	07/23/96

Analyte	UNITS OF MEASURE	Result
WET CHEMISTRY ANALYSIS		
Ammonia	MG/L	1.80
Biochemical Oxygen Demand	MG/L	433
Chemical Oxygen Demand	MG/L	5300
Chloride	MG/L	54.0
Dissolved Oxygen	MG/L	7.6
Nitrite	MG/L	0.050 U
Nitrogen, Nitrate	MG/L	0.050 U
Phosphate as PO4	MG/L	0.13
Soluble Biochemical Oxygen Demand	MG/L	448
Soluble Chemical Oxygen Demand	MG/L	820
Soluble Organic Carbon	MG/L	200
Soluble Total Kjeldahl Nitrogen	MG/L	19.0
Total Alkalinity	MG/L	240
Total Dissolved Inorganic Solids	MG/L	280
Total Dissolved Solids	MG/L	600
Total Hardness	MG/L	290
Total Kjeldahl Nitrogen	MG/L	26.0
Total Organic Carbon	MG/L	210
Total Suspended Solids	MG/L	400
Volatile Suspended Solids	MG/L	390
pH	PH UNITS	7.09

Indicates Result is Outside QC Limits
A = Not Applicable

Recra LabNet

Date: 08/23/96
Time: 16:25:26

HYDRO SEARCH INCORPORATED
BEAZER KOPPERS GRENADA MS
ANALYTICAL RESULTS

Report: AN0373
Page: 3

Analyte	UNITS OF MEASURE	Result				
Client Sample ID:		PW2-T6				
Job Number & Lab Sample ID:		H96-1828 H61B2B0B				
Sample Date:		07/23/96				
GRENADA MISS. GROUNDWATER ANALYSIS - TOTAL METAL						
Antimony - Total	MG/L	0.010 U				
Beryllium - Total	MG/L	0.0050 U				
Cadmium - Total	MG/L	0.0050 U				
Calcium - Total	MG/L	64.0				
Chromium - Total	MG/L	0.010 U				
Copper - Total	MG/L	0.010				
Iron - Total	MG/L	1.9				
Magnesium - Total	MG/L	14.0				
Manganese - Total	MG/L	2.4				
Nickel - Total	MG/L	0.010 U				
Selenium - Total	MG/L	0.010 U				
Silver - Total	MG/L	0.010 U				
Thallium - Total	MG/L	0.010 U				
Zinc - Total	MG/L	0.044				
GRENADA GROUNDWATER ANALYSIS - DISSOLVED METALS						
Antimony - Soluble	MG/L	0.010 U				
Beryllium - Soluble	MG/L	0.0050 U				
Cadmium - Soluble	MG/L	0.0050 U				
Calcium - Soluble	MG/L	66.0				
Chromium - Soluble	MG/L	0.010 U				
Copper - Soluble	MG/L	0.0050 U				
Iron - Soluble	MG/L	0.79				
Magnesium - Soluble	MG/L	30.0				
Manganese - Soluble	MG/L	2.6				
Nickel - Soluble	MG/L	0.010 U				
Selenium - Soluble	MG/L	0.010 U				
Silver - Soluble	MG/L	0.010 U				
Thallium - Soluble	MG/L	0.010 U				
Zinc - Soluble	MG/L	0.012				
TOTAL METALS						
Arsenic - Total	MG/L	0.010 U				
Lead - Total	MG/L	0.0030 U				
Mercury - Total	MG/L	0.00020U				

Indicates Result Is Outside QC Limits
A = Not Applicable

Client Sample ID:	PW2-T6				
Job Number & Lab Sample ID:	H96-1828 H6162808				
Sample Date:	07/23/96				
Analyte	UNITS OF MEASURE	Result			
LUBLE METALS					
Arsenic - Soluble	MG/L	0.010 U			
Lead - Soluble	MG/L	0.0030 U			
Mercury - Soluble	MG/L	0.00020U			

ndicates Result Is Outside QC Limits
= Not Applicable

Recra LabNet

HSI GEOTRANS
A TETRA TECH COMPANY

46050 Manekin Plaza
Suite 100
Sterling, Virginia
20166

703-444-7000 FAX 703-444-1685

August 5, 1999

By Facsimile

Steve Spengler
Mississippi Department of Environmental Quality
Office of Pollution Control
P.O. Box 10385
Jackson, Mississippi 39289-0385

Reference: Interim Measure at Koppers/Beazer East, Grenada, MS

Dear Mr. Spengler:

HSI GeoTrans is submitting this letter to request authorization to discharge to the POTW from the referenced facility. Beazer East is in the process of implementing an Interim Measure at the facility's Solid Waste Management Unit (SWMU) 11 which includes a former wastewater lagoon and the Central Ditch. The Interim Measure, approved by EPA Region IV, involves the removal of sediments impacted by creosote and realignment of the ditch through the site, among other activities. During this work we have collected a significantly greater volume of water impacted with creosote than was expected. This variance has been due to numerous hydrogeologic, hydrologic and climatic factors.

At present, we have approximately 65,000 gallons of water requiring disposal; and based on our experience thus far, expect to collect up to several hundred thousand additional gallons over the next three to four months. Based on our conversations we understand that the POTW would be willing to consider discharge of batches of treated water during off peak hours with discharge requirements equivalent to the existing Koppers facility pretreatment standards (table attached) not including the copper, chromium, and arsenic (CCA) components which will not require monitoring.

Beazer intends to procure a 50 gpm treatment unit including a prefilter, organic clay filtration and granular activated carbon adsorption unit to treat the water to the pretreatment standards. We understand that you wish to see the results of an initial batch treatment prior to allowing flow through treatment, following which periodic sampling will be required. We propose to treat batches at 50 gpm for the hours you designate, so that if 12 hours are allowed the batch treated would be 36,000 gallons.

We appreciate your consideration in this matter. If you have any questions please contact me.

Sincerely,

Peter A. Rich, P.E.
Principal Engineer

PAR/eb
Attachment: as stated
cc: M. Bollinger
M. Wheeler
T. Rogers

D:\BEAZER\[illegible]
August 5, 1999

AUG-09-1999 10:10 HSI GEOTRANS 703 444 1685 P.03/03

PART I

PRETREATMENT LIMITATIONS AND MONITORING REQUIREMENTS

1. During the period beginning November 14, 1995, and lasting until November 13, 2000, the permittee is authorized to discharge from outfall(s) serial number(s) 001 (Total Facility Discharge).

   Such discharges shall be limited and monitored by the permittee as specified below:

PARAMETER	DISCHARGE LIMITATIONS				MONITORING REQUIREMENTS	
	kg/day (lbs/day)		Other Units (Specify)		Measurement	Sample
	Monthly Avg.	Daily Max.	Monthly Avg.	Daily Max.	Frequency	Type
Flow-M³/day (MGD)	--	--	Report	(0.035)	Daily	Continuous
Biochemical Oxygen Demand (5-Day)	32(70)	63(140)	240 mg/l	480 mg/l	Once/Week	24-Hr. Composite
Total Suspended Solids	40(88)	79(175)	300 mg/l	600 mg/l.	Once/Week	24-Hr. Composite
Total Phenols	.40(.88)	.79(1.75)	3 mg/l	6 mg/l	Once/Week	Grab
Pentachlorophenol	.024(.053)	.048(.105)	.18 mg/l	.36 mg/l	Once/Week	Grab
Oil and Grease	Report	13.2(29.2)	Report	100 mg/l	Once/Week	Grab
	kg/day (lbs/day)		Other Units (Specify)		Measurement	Sample
	Yearly Avg.	Yearly Max.	Yearly Avg.	Yearly Max.	Frequency	Type
Copper, Total Recoverable	Report	0.291(0.642)	Report	2.2 mg/l	Twice/Year	24-Hr. Composite
Chromium, Total Recoverable	Report	0.529(1.168)	Report	4.0 mg/l	Twice/Year	24-Hr. Composite
Arsenic, Total Recoverable	Report	0.060(0.131)	Report	.45 mg/l	Twice/Year	24-Hr. Composite

2. The pH shall not be less than 5.5 standard units nor greater than 9.5 standard units and shall be monitored twice per week with a grab sample of the effluent.

3. Samples taken in compliance with the monitoring requirements specified above shall be taken at the following location(s): the nearest accessible point after final treatment but prior to actual discharge into the POTW collection system or mixing with non-regulated wastewater streams.

HSI GEOTRANS
A TETRA TECH COMPANY

46050 Manekin Plz., Ste. 100 ✦ Sterling, VA 20166 ✦ (703) 444-7000 ✦ Fax: (703) 444-1685

FAX TRANSMISSION COVER SHEET

TO: Steve Spengler	Date: 8/9/99
From: Peter Rich	No. Of Pages: (including cover sheet) 3
Fax No.: 601 961 5703	Phone No.:

Notes:

Letter attached

IF YOU DO NOT RECEIVE THE NUMBER OF PAGES LISTED ABOVE, PLEASE CALL.

Albany, NY (518) 458-9285 (518) 458-9284 (FAX)	Costa Mesa, CA (714) 513-1415 (714) 513-1278 (FAX)	Milwaukee, WI (414) 792-1282 (414) 792-1310 (FAX)	Sterling, VA (703) 444-7000 (703) 444-1685 (FAX)	Tucson, AZ *(Herb Hoffman)* (520) 825-6518 (520) 825-6394 (FAX)
Ann Arbor, MI (734) 213-4085 (734) 213-5008 (FAX)	Freehold, NJ (732) 409-0344 (732) 409-3020 (FAX)	Puerto Rico (787) 774-8776 (787) 774-8799 (FAX)	Tempe, AZ (602) 839-2800 (602) 839-2828 (FAX)	
Atlanta, GA (770) 642-1000 (770) 642-8808 (FAX)	Harvard, MA (508) 772-7557 (508) 772-6183 (FAX)	Reno, NV (775) 324-5900 (775) 324-5924 (FAX)	Washington *(Gordon Ballentine)* (206) 286-1929	
Canby, OR *(John Collins)* (503) 266-1581	King of Prussia, PA *(John Gee)* (610) 491-9688 (610) 491-9645 (FAX)	Richmond, VA (804) 346-5433 (804) 346-5432	Westminster, CO (303) 426-7501 (303) 426-7780 (FAX)	
Concord, NH (Theresa Lopez) (603) 227-9591 (603) 225-4946 (FAX)	Las Vegas, NV (702) 295-2033 (702) 295-2025 (FAX)	Sacramento, CA (916) 853-1800 (916) 853-1860 (FAX)	Tucson, AZ *(Michael Monroy)* (520) 620-6392 (520) 620-6394 (FAX)	

This facsimile contains PRIVILEGED AND CONFIDENTIAL INFORMATION intended only for the use of the Addressee(s) named above. If you are not the intended recipient of this facsimile, or employee or agent responsible for delivering it to the intended recipient, you are hereby notified that any dissemination or copying of this facsimile is strictly prohibited. If you have received this facsimile in error, please immediately notify us by Telephone and return the original facsimile to us at the above address via the U.S. Postal Service. Thank you.

JUNE 6, 1995
KOPPERS INDUSTRIES, INC.
MSP090300
GRENADA, MISSISSIPPI
PRETREATMENT PERMIT RATIONALE

I. FACILITY INFORMATION:

A. Nature of Business: Wood preservation.

B. Proposed Flowrate: .035 MGD

C. Applicable Federal Regulations: 40 CFR 429.80, Subpart G, Wood Preserving, Steam Subcategory.

II. POTW INFORMATION:

A. Name: City of Grenada POTW (MS0020397) - Aerated Lagoon

B. POTW Discharge Monitoring Report Average: 2.24 MGD (Q_{POTW})

C. POTW Receiving Stream Name: Yalobusha River

D. POTW Receiving Stream 7Q10: 35.55 MGD ($Q_{7/10}$)

III. PERTINENT FLOW RATE DATA:

A. POTW 12 Month Flow Average (DMR):

Month	Flow (MGD)
Dec. 94	2.2
Nov. 94	2.3
Oct. 94	2.3
Sept. 94	2.4
Aug. 94	1.97
July 94	2.9
June 94	2.1
May 94	1.7
Apr. 94	2.2
Mar. 94	2.5
Feb. 94	2.3
Jan. 94	2.02
Average	2.24 MGD

PART I

A. PRETREATMENT LIMITATIONS AND MONITORING REQUIREMENTS

1. During the period beginning November 14, 1995, and lasting until November 13, 2000, the permittee is authorized to discharge from outfall(s) serial number(s) 001 (Total Facility Discharge).

   Such discharges shall be limited and monitored by the permittee as specified below:

PARAMETER	DISCHARGE LIMITATIONS				MONITORING REQUIREMENTS	
	kg/day (lbs/day)		Other Units (Specify)		Measurement	Sample
	Monthly Avg.	Daily Max.	Monthly Avg.	Daily Max.	Frequency	Type
Flow-M^3/day (MGD)	--	--	Report	(0.035)	Daily	Continuous
Biochemical Oxygen Demand (5-Day)	32(70)	63(140)	240 mg/l	480 mg/l	Once/Week	24-Hr. Composite
Total Suspended Solids	40(88)	79(175)	300 mg/l	600 mg/l	Once/Week	24-Hr. Composite
Total Phenols	.40(.88)	.79(1.75)	3 mg/l	6 mg/l	Once/Week	Grab
Pentachlorophenol	.024(.053)	.048(.105)	.18 mg/l	.36 mg/l	Once/Week	Grab
Oil and Grease	Report	13.2(29.2)	Report	100 mg/l	Once/Week	Grab
	kg/day (lbs/day)		Other Units (Specify)		Measurement	Sample
	Yearly Avg.	Yearly Max.	Yearly Avg.	Yearly Max.	Frequency	Type
Copper, Total Recoverable	Report	0.291(0.642)	Report	2.2 mg/l	Twice/Year	24-Hr. Composite
Chromium, Total Recoverable	Report	0.529(1.168)	Report	4.0 mg/l	Twice/Year	24-Hr. Composite
Arsenic, Total Recoverable	Report	0.060(0.131)	Report	.45 mg/l	Twice/Year	24-Hr. Composite

2. The pH shall not be less than 5.5 standard units nor greater than 9.5 standard units and shall be monitored twice per week with a grab sample of the effluent.

3. Samples taken in compliance with the monitoring requirements specified above shall be taken at the following location(s): the nearest accessible point after final treatment but prior to actual discharge into the POTW collection system or mixing with non-regulated wastewater streams.

601 227 3418 Clouds Tighlman

B. Industrial Facilities Flowrate Data:

	Max Heat-N	Max Heat-S	Max Penn	Avg Bin	Max Kop
1.	.009	.101	.138	.066	.027
2.	.009	.102	.14	.065	.034
3.	.007	.0997	.14	.088	.030
4.	.007	.103	.126	.072	.024
5.	.0077	.102	.142	.064	.026
6.	.008	.101	.167	.073	.033
7.	.007	.101	.0877	.071	.034
8.	.01	.101	.089	.062	.034
9.	.0058	.103	.072	.068	.030
10.	.008	.103	.049	.073	.035
11.	.005	.102	.064	.007	.035
12.	.0099	.088	.083	.077	.037
Use	.01	.103	.167	.088	.037

C. X_{ta} = Max. Permitted Loads

Parameter	#/d Heatcraft North	#/d Binswanger	#/d Pennaco	#/d Heatcraft (South)	X_{tat} #/d Total
Cr	.462	2.079	1.6	0.72	4.861
Cu	.564	2.537	--	2.73	5.831

D. X_t = Average Discharge Value from DMRs using 12 months of Data

Parameter	#/d Heatcraft North	#/d Heatcraft (South)	#/d Pennaco	#/d Binswanger	X_{tat} #/d Total
Cr	.003	.01	.30	.018	.331
Cu	.077	.26	--	.22	.557

IV. BACKGROUND/DOMESTIC LOADING CALCULATIONS:

Background Loading (BG_L), #/day = 8.34($BG_{C(1)}$, mg/L)(Q_{POTW} - $SumQ_{INDUSTRIAL(2)}$, MGD)

BG_L(Cr) = 8.34(.051)(2.24 - .01 - .103 - .167 - .088 - .037) = .78 #/day

BG_L(Cu) = 8.34(.097)(1.84) = 1.5 #/day

BG_L(As) = 8.34(.003)(1.84) = .05 #/day

(1) BG_C = Background concentration in domestic sewage; See Attachment I for tabulation of actual values from City of Grenada Toxicity Study.

(2) Sum $Q_{INDUSTRIAL} = Q_{W1} + Q_{W2} + Q_{W3} + Q_{W4} + Q_{W5}$
where Q_W = Largest Average Flowrate from Discharge Monitoring Report (DMR) for the 1994 monitoring year.

where Q_{W1} from Heatcraft North DMR
Q_{W2} from Heatcraft South DMR
Q_{W3} from Pennaco DMR
Q_{W4} from Binswanger DMR
Q_{W5} from Koppers DMR

V. WATER QUALITY ANALYSIS:

A. $IWC = Q_W/(Q_{7/10} + Q_{POTW}) = Q_W/(35.55 + 2.24)$

The IWC values for all five industries were 0.026%, .27%, .44%, .23%, and .10% for Heatcraft North, Heatcraft South, Pennaco, Binswanger, and Koppers, respectively. Therefore, develop acute screen only.

B. Allowable Water Quality Criteria (AWQC) Headworks Loading Calculations:

$AWQC, \#/day = 8.34(C_{CRITICAL(1)}, mg/l)(Q_{POTW} + Q_{7/10}, MGD)/(1 - R_{POTW(2)}, dec.)$

$AWQC(Cr) = 8.34(0.833)(35.55 + 2.24)/(1 - .33)$
$= 392 \#/day$

$AWQC(Cu) = 8.34(0.00782)(35.55 + 2.24)/(1 - .77)$
$= 11 \#/day$

$AWQC(As) = 8.34(0.342)(35.55 + 2.24)/(1 - .67)$
$= 327 \#/day$

$AWQC(Penta) = 8.34(.00332)(35.55 + 2.24)/(1 - 0)$
$= 1.05 \#/day$

(1) - State of Mississippi Water Quality Criteria for Intrastate, Interstate, and Coastal Waters ... Freshwater Acute Values.

(2) - Office of Pollution Control Removal Study utilizing City of Grenada Toxicity Data.

C. Background/Domestic Loading vs. Allowable Water Quality Criteria Headworks Loading Comparison

Parameter	BG_L, #/day(1)	vs	AWQC, #/day
Chromium	.78	<	392
Copper	1.5	<	11
Arsenic	.05	<	327

(1) Calculated values utilized; see Part IV.

VI. POTW INHIBITION ANALYSIS:

A. Allowable Loading at POTW:

HWI_L, #/day = 8.34(Q_{POTW}, MGD)($C_{INHIB(1)}$, mg/L)

HWI_L(Cr) = 8.34(2.24)(1.0) = 18.7 #/day

HWI_L(Cu) = 8.34(2.24)(1.0) = 18.7 #/day

HWI_L(As) = 8.34(2.24)(0.1) = 1.9 #/day

HWI_L(Penta) = 8.34(2.24)(.95) = 17.7 #/day

(1) EPA Guidance Manual ... Table 3-2. Activated Sludge Inhibition Threshold Levels.

VII. LIMITING CASE SUMMARY TABLE

Parameter	HWI_L (#/d)	AWQC (#/d)	If AWQC < HWI_L L_o = AWQC If HWI_L < AWQC L_o = HWI_L L_C (#/d)	X_u (#/d)	X_{tot} (#/d)	BG_L (#/d)	$X_u < L_o$ Pass/Fail	$X_{tot} < L_C$ Pass/Fail	$BG_L < L_C$ Pass/Fail
Cr	18.7	392	18.7	.331	4.861	0.78	Pass	Pass	Pass
Cu	18.7	11	11	.557	5.831	1.5	Pass	Pass	Pass
As	1.9	327	1.9	----	----	0.05	----	----	Pass
Penta	17.7	1.05	1.05			----			

VIII. UNIFORM CONCENTRATION METHOD BASED ON TOTAL INDUSTRIAL FLOW FOR THE DEVELOPMENT OF ALLOWABLE ACUTE CONCENTRATIONS:

The remaining industrial waste load allocation will be used in calculating allowable acute concentrations using the Concentration Limit Method Based on Industrial Contributory Flow method as described in EPA Guidelines Manual on the Development and Implementation of Local Discharge Limitations Under the Pretreatment Program.

Industrial Flows Utilized:

Q_1	- Binswanger Permitted Flow =	.09 MGD
Q_2	- Heatcraft North Permit Flow =	.02 MGD
Q_3	- Heatcraft South Permit Flow =	.211 MGD
Q_4	- Pennaco Permit Flow =	.160 MGD
Q_5	- Koppers Permit Application =	.035 MGD
Q_T	-	.516 MGD

Equations: $P_{A5} = (L_C, \#/day - BG_L, \#/day)\left(\frac{Q_{W5}, MGD}{Q_T, MGD}\right)$

$$C_{ALLOW}, mg/L = \frac{P_{A5}, \#/day}{8.34(Q_{W5}, MGD)}$$

where, P_{A5} = Permit Allocation for Industry.

Q_T = Total Industrial Contributary Flow for pertinent pollutant.

L_C = Limiting Case Loading from Part VII. (Page 5).

BG_L = Background Loading from Part VII. (Page 5).

Calculations:

Chromium $P_{A5} = (18.7 - .78)\left(\frac{.035\ MGD}{.516\ MGD}\right)$

$= 1.22\ \#/day$

$$C_{ALLOW} = \frac{1.22\ \#/day}{(8.34)(.035\ MGD)} = 4.2\ mg/l$$

Copper $P_{A5} = (11 - 1.5)\left(\frac{.035\ MGD}{.516\ MGD}\right)$

$= .644\ \#/day$

$$C_{ALLOW} = \frac{.644\ \#/day}{(8.34)(.035\ MGD)} = 2.2\ mg/l$$

<u>Arsenic</u>

$$P_{AS} = (1.9 - .05)\frac{(.035\ MGD)}{.516\ MGD}$$

$$= .13\ \#/day$$

$$C_{ALLOW} = \frac{.13\ \#/day}{(8.34)(.035\ MGD)} = .45\ mg/l$$

VIII. SUMMARY AND PROPOSED LIMITS:

Parameter	BG_c Domestic Concent. (mg/L)	C_{ALLOW} Allowable Acute Concent. (mg/L)	Categorical Discharge Limitations (mg/L)	Proposed Permit Limitations Daily Maximum Concent. (Max) (mg/L)	Monitoring Frequency
Cr	0.78	4.2	4	4.0	Twice/Month
Cu	1.5	2.2	5	2.2	Twice/Month
As	0.05	0.45	4	0.45	Twice/Month
Oil & Grease	---	---	100	100 mg/L	Once/Week
BOD	---	---	---	480 mg/L	Once/Week
TSS	---	---	---	600 mg/L	Once/Week
Pentachlorophenol	---	---	---	.36 mg/L	Once/Week

The limits for Pentachlorophenol is less than the AWQC and HWI and will not change from previous issuance of this permit.

BUREAU OF POLLUTION CONTROL
SAMPLE REQUEST FORM

Lab Bench No. _____

I. GENERAL INFORMATION: Facility Name: Kopper's Industries, Inc.

County Code: 043 - Grenada — NPDES Permit No.: 90300

Discharge No.: 001 — Date Requested: July 1999

Sample Point Identification: Total Facility Discharge

Requested By: _____ — Data To: Russ Twitty

Type of Sample: Grab (X) Composite (Flow) (Time X) Other ( )

II. SAMPLE IDENTIFICATION:

Environment Condition: Sunny, HOT — Collected By: CLIFT JETER

Where Taken: Effluent

	Type	Parameters	Preservative	Date	Time
1.	Composite	BOD, SS	Cool 4°	8-19-99	1130
2.	Composite	Cu, Cr, As	5ml HNO_3	8-19-99	1130
3.	Grab	Phenols	Cool 4°	8-19-99	1130
4.	Grab	Pentachlorophenol	Cool 4°	8-19-99	1130
5.	Grab	Oil & Grease	5ml H_2SO_4	8-19-99	1130

III. FIELD:

Analysis	Computer Code	Request	Results	Analyst	Date
pH	(000400)	(X)	8.39	CJ	8-19-99
D.O.	(000300)	( )			
Temperature	(000010)	( )			
Residual Chlorine	(050060)	( )			
Flow	(074060)	(X)	.011	CJ	8-19-99

IV. TRANSPORTATION OF SAMPLE: Bus ( ) RO Vehicle ( ) Other (X) Douglas, Inc.

V. LABORATORY: Received By: Megan Johnson — Date: 8-20-99 — Time: 920

Recorded By: _____ — Date Sent to State Office: _____

Analysis	Computer Code	Request	Result		Analyst	Date Measured
BOD5	(000310)	(X)	<2.0	mg/1	MM	*8-20-99
COD	(000340)	( )		mg/1		
TOC	(000680)	( )		mg/1		
Suspended Solids	(099000)	(X)	62.0	mg/1	MM	8-23-99
TKN	(000625)	( )		mg/1		
Ammonia-N	(000610)	( )		mg/1		
Fecal Coliform(1)	(074055)	( )		colonies/100 ml		*
Fecal Coliform(2)	(074055)	( )		colonies/100 ml		*
Total Phosphorus	(000665)	( )		mg/1		
Oil and Grease(1)	(000550)	(X)	<5.0	mg/1	KF/MM	8-26-99
Oil and Grease(2)	(000550)	( )		mg/1		
Chlorides	(099016)	( )		mg/1		
Phenol	(032730)	(X)	<.05	mg/1	KF	8-25-99
Total Chromium	(001034)	( )		mg/1		
Hex. Chromium	(001032)	( )		mg/1		
Zinc	(001092)	( )		mg/1		
Copper	(001042)	( )		mg/1		
Lead	(017501)	( )		mg/1		
Cyanide	(000722)	( )		mg/1		

RECEIVED OCT 18 1999 DEQ-OPC

Remarks: 5700

*Date of Test Initiation — Thomas Henderson — 2309

BUREAU OF POLLUTION CONTROL
SAMPLE REQUEST FORM

Lab Bench No.: 2309
Cost Code: 3700

I. GENERAL INFORMATION:

Facility Name: Kopper's Industries, Inc.
County Code: 043 -Grenada — **NPDES Permit No.:90300**
Discharge No: 001 — **Date Requested: 7-99**
Sample Point Identification: Total Facility discharge
Requested By: — **Data To: R. Twitty**
Type of Sample: Grab: (X) Composite: Flow: Time:(X) Other:

II. SAMPLE IDENTIFICATION:

Environment Condition: Sunny, Hot — **Collected By: C. Jeter**
Where Taken: Effluent

	Type	Parameters	Preservative	Date	Time
1.	Comp	BOD, SS	Cool 4°	8-19-99	1130
2.	Comp	Cr, Cr, As	5ml HNO_2	8-19-99	1130
3.	Grab	Phenols	Cool 4°	8-19-99	1130
4.	Grab	Pentachorophenol	Cool 4°	8-19-99	1130
5.	Grab	O & G	5ml H_2SO_4	8-19-99	1130
6.					

III. FIELD:

Analysis	Computer Code	Req	Results	Analyst	Date
pH	000400	X	8.39	CJ	8-19-99
D.O.	000300				
Temperature	000010				
ResidualChlorine	050060				
Flow Total Batch	074060	X	.011	CJ	8-19-99

IV. TRANSPORTATION OF SAMPLE:

Bus: — **RO Vehicle:** — **Other:(X) Douglas Inc.**

V. LABORATORY:

Received by: Megan Johnson — **Date: 8-20-99** — **Time: 0920**
Recorded by: T. Sawyer — **Date Sent to State Office:** 10-14-99

Remark:

TARGET COMPOUND LIST
WET CHEMISTRY PARAMETERS

Lab Bench No.: 2309

Analysis	Computer Code	Req	Result	Analyst	Date Measured or Date Test Initiated
BOD	000310	X	< 2.0 mg/l	MM	8-20-99
COD	000340		mg/l		
TOC	000680		mg/l		
Suspended Solids	099000	X	62.0 mg/l	MM	8-23-99
TKN	000625		mg/l		
Ammonia-N	000610		mg/l		
Fecal Coliform	074055		colonies/100ml		
Total Phosphorous	000665		mg/l		
Oil & Grease	000550	X	< 5.0 mg/l	KF/MM	8-26-99
Chlorides	099016		mg/l		
Phenol	032730	X	< .05 mg/l	KF	8-25-99
Cyanide	000722		mg/l		
Nitrate-Nitrite	000630		mg/l		
Alkalinity	000410		mg/l		
Hardness	000900		mg/l		

INORGANICS REPORT
WATER

SAMPLE No.: 2309

ANALYSES:_____ **DATE COLLECTED:**_____

PARAMETER	CONC. ug/l	MQL ug/l	QC %Rec.	Analyst	Date
Arsenic	9.0	5.0	110	GB	9-17-99
Chromium	ND	1.0	100	GB	9-17-99
Copper	ND	5.0	101	GB	9-17-99

MQL = minimum quantifiable levels
QC %Rec = percent recovery of quality control standard

TARGET COMPOUND LIST
SEMIVOLATILE ORGANIC COMPOUNDS
IN WATER

OPCL NO.: 2309 MARKED: Koppers Industries, Inc.

ANALYSIS OF: Water DATE RECEIVED: 8-20-99

COMPOUNDS	MQL	µg/L	COMPOUNDS	MQL	µg/L	COMPOUNDS	MQL	µg/L
Phenol	10	ND	4-Chloro-3-methylphenol	20	ND	Hexachlorobenzene	10	ND
bis(2-Chloroethyl)ether	10	ND	2-Methylnaphthalene	10	ND	Pentachloropohenol	50	Trace,3.99
2-Chlorophenol	10	ND	Hexachlorocyclopentadiene	10	ND	Phenanthrene	10	Trace
1,3-Dichlorobenzene	10	ND	2,4,6-Trichlorophenol	10	ND	Anthracene	10	ND
1,4-Dichlorobenzene	10	ND	2,4,5-Trichlorophenol	10	ND	Di-n-butylphthalate	10	ND
Benzyl alcohol	20	ND	2-Chloronaphthalene	10	ND	Fluoranthene	10	ND
1,2-Dichlorobenzene	10	ND	2-Nitroaniline	50	ND	Pyrene	10	ND
2-Methylphenol	10	ND	Dimethylphthalate	10	ND	Butylbenzylphthalate	10	ND
bis(2-Chloroisopropyl)ether	10	ND	Acenaphtylene	10	Trace	3,3'Dichlorobenzidine	50	ND
4-Methylphenol	10	ND	2,6-Dinitrotoluene	10	ND	Benzo(a)anthracene	10	ND
N-Nitroso-di-n-propylamine	20	ND	3-Nitroaniline	50	ND	Chrysene	10	ND
Hexachloroethane	20	ND	Acenaphthene	10	ND	bis(2-Ethylhexyl)phthalate	10	ND
Nitrobenzene	10	ND	2,4-Dinitrophenol	50	ND	Di-n-octylphthalate	10	ND
Isophorone	10	ND	4-Nitrophenol	50	ND	Benzo(b)fluoranthene	10	Trace
2-Nitrophenol	20	ND	Dibenzofuran	10	ND	Benzo(k)fluoranthene	10	Trace
2,4-Dimethylphenol	10	ND	2,4-Dinitrotoluene	10	ND	Benzo(a)pyrene	10	ND
Benzoic acid	50	Trace	Diethylphthalate	10	ND	Indeno(1,2,3-cd)pyrene	20	TRace
bis(2-Chloroethoxy)methane	10	ND	4-Chlorophenyl-phenylether	10	ND	Dibenz(a,h)anthracene	20	ND
2,4-Dichlorophenol	10	ND	Fluorene	10	ND	Benzo(g,h,i)perylene	20	Trace
1,2,4-Trichlorobenzene	10	ND	4-Nitroaniline	50	ND	Carbazole		Trace
Naphthalene	10	ND	4,6-Dinitro-2-methylphenol	50	ND			
4-Chloroaniline	20	ND	N-nitrosodiphenylamine	20	ND			
Hexachlorobutadiene	10	ND	4-Bromophenyl-phenylether	10	ND			

SURROGATES	RECOVERY (%)	LIMITS
2-Fluorophenol	57	21-100
Phenol-d5	62	10-194
Nitrobenzene-d5	61	35-114
2-Fluorobiphenyl	62	43-116
2,4,6-Tribromophenol	71	10-123
p-Terphenyl-d14	62	33-141

Date Extracted: 8 / 24 / 1999
Date Injected: 8 / 31 / 1999
ND = None Detected
MQL = Minimum Quantifiable Level
Analyst: Jon Shell

Lower Detection Level = MQL X 1 = _____ µg/L

___ No peaks above 40% of internal standard.
___ Peaks above 40% of internal standard on EPA Appendx IX were identified.*
___ Peaks above 40% of internal standard not on EPA Appendix IX.**
___ Peaks above 40% of internal standard not on EPA Appendix IX were not identified.
___ Additional peaks were observed, but not examined.

COMMENTS: See TIC's attached.

Mississippi Dept. of Environmental Quality
Office of Pollution Control
Laboratory

Sample # 2309
Site: Koppers Industries, Inc.
Collected: 8/20/99

Tentatively Identified Compounds

Compound	Estimated Concentration (ug/L)
1) Hexadecanoic acid	73.4
2) Oleic acid	39.4
3) Octadecanoic acid	22.2
4) Unknown @ 24.58 min.	20.9

COLUMBIA ANALYTICAL SERVICES, INC.

Analytical Report

Client: HSI GeoTrans, Inc.
Project: Beazer East/TIE Plant, MS/N913-202
Sample Matrix: Water

Service Request: K9907636
Date Collected: 10/25/99
Date Received: 10/26/99
Date Extracted: NA

Inorganic Parameters
Units: mg/L (ppm)

Analyte:	pH (units)	Biochemical Oxygen Demand (5-Day)	Phenolics, Total
EPA Method:	150.1	405.1	335.2
Method Reporting Limit:	-	4	0.01
Date Analyzed:	10/26/99	10/27/99	10/29/99
Sample Name / **Lab Code**			
Beazer East Treatment Syst. / K9907636-001	7.21 ✓	ND ✓	ND ✓
Method Blank / K9907636-MB	-	-	ND
Limit	5.5 - 9.0	240	3

Approved By: _____ Date: 11-2-99

07636WET.LJ1 - 3_Tests 11/2/99

COLUMBIA ANALYTICAL SERVICES, INC.

Analytical Report

Client: HSI GeoTrans, Inc.
Project: Beazer East/TIE Plant, MS/N913-202
Sample Matrix: Water

Service Request: K9907636
Date Collected: 10/25/99
Date Received: 10/26/99
Date Extracted: 10/29/99
Date Analyzed: 10/29/99

Oil and Grease
EPA Method 413.1
Units: mg/L (ppm)

Sample Name	Lab Code	MRL	Result
Beazer East Treatment Syst.	K9907636-001	5	5 ✓
Method Blank	K991029-WB	5	ND
Limit			100

Approved By: _____ Date: _____

1AMRL/102594

COLUMBIA ANALYTICAL SERVICES, INC.

Analytical Report

Client: HSI GeoTrans, Inc.
Project: Beazer East/TIE Plant, MS/N913-202
Sample Matrix: Water

Service Request: K9907636
Date Collected: 10/25/99
Date Received: 10/26/99
Date Extracted: 10/28/99
Date Analyzed: 10/28/99

Pentachlorophenol
EPA Methods 8151 Modified
Units: µg/L (ppb)

Sample Name	Lab Code	MRL	Result
Beazer East Treatment Syst.	K9907636-001	0.5	ND ✓
Method Blank	K991028-WB	0.5	ND
Limit			180

Approved By: _____ Date: _____

1AMR1/120594

COLUMBIA ANALYTICAL SERVICES, INC.

Analytical Report

Client: HSI GeoTrans
Project: Beazer East/Tie Plant, MS./N913-202
Sample Matrix: Water

Service Request: K9905362
Date Collected: 8/11/99
Date Received: 8/12/99
Date Extracted: NA
Date Analyzed: 8/12/99

Biological Oxygen Demand 5-Day
EPA Method 405.1
Units: mg/L (ppm)

Sample Name	Lab Code	MRL	Result
Beazer East Treatment System	K9905362-001	4	4
Limit			240

Approved By: _____ Date: _____

PART I

A. PRETREATMENT LIMITATIONS AND MONITORING REQUIREMENTS

1. During the period beginning November 14, 1995, and lasting until November 13, 2000, the permittee is authorized to discharge from outfall(s) serial number(s) 001 (Total Facility Discharge).

   Such discharges shall be limited and monitored by the permittee as specified below:

PARAMETER	DISCHARGE LIMITATIONS				MONITORING REQUIREMENTS	
	kg/day (lbs/day)		Other Units (Specify)		Measurement Frequency	Sample Type
	Monthly Avg.	Daily Max.	Monthly Avg.	Daily Max.		
Flow-M^3/day (MGD)	--	--	Report	(0.035)	Daily	Continuous
Biochemical Oxygen Demand (5-Day)	32(70)	63(140)	240 mg/l	480 mg/l	Once/Week	24-Hr. Composite
Total Suspended Solids	40(88)	79(175)	300 mg/l	600 mg/l	Once/Week	24-Hr. Composite
Total Phenols	.40(.88)	.79(1.75)	3 mg/l	6 mg/l	Once/Week	Grab
Pentachlorophenol	.024(.053)	.048(.105)	.18 mg/l	.36 mg/l	Once/Week	Grab
Oil and Grease	Report	13.2(29.2)	Report	100 mg/l	Once/Week	Grab
	kg/day (lbs/day)		Other Units (Specify)		Measurement Frequency	Sample Type
	Yearly Avg.	Yearly Max.	Yearly Avg.	Yearly Max.		
Copper, Total Recoverable	Report	0.291(0.642)	Report	2.2 mg/l	Twice/Year	24-Hr. Composite
Chromium, Total Recoverable	Report	0.529(1.168)	Report	4.0 mg/l	Twice/Year	24-Hr. Composite
Arsenic, Total Recoverable	Report	0.060(0.131)	Report	.45 mg/l	Twice/Year	24-Hr. Composite

2. The pH shall not be less than 5.5 standard units nor greater than 9.5 standard units and shall be monitored twice per week with a grab sample of the effluent.

3. Samples taken in compliance with the monitoring requirements specified above shall be taken at the following location(s): the nearest accessible point after final treatment but prior to actual discharge into the POTW collection system or mixing with non-regulated wastewater streams.

BUREAU OF POLLUTION CONTROL
SAMPLE REQUEST FORM

Lab Bench No. 39

I. GENERAL INFORMATION: Facility Name Koppers Industries
County Code Grenada 043 NPDES Permit No. MSP090300
Discharge No. 001 Date Requested 1/96
Sample Point Identification Total Facility Discharge
Requested By Comp. Monit. Data To
Type of Sample: Grab ( ) Composite (Flow) (Time X) Other ( )

II. SAMPLE IDENTIFICATION:
Environment Condition Partly cloudy/mild Collected By L.Burrell
Where Taken From access ports

	Type	Parameters	Preservative	Date	Time
1.	Composite	BOD, SS	Chill	1/17/96	1200
2.	Grab	Oil & Grease	H_2SO_4 pH <2	1/17/96	1200
3.	Grab	Phenol	H_2SO_4 pH <2	1/17/96	1200
4.	Grab	Pentachlorophenol	Cool	1/17/96	120
5.					

III. FIELD:

Analysis	Computer Code	Request	Results	Analyst	Date
pH	(000400)	(X)	7.4 @ 22°C	LB	1/17/96
D.O.	(000300)	( )			
Temperature	(000010)	( )			
Residual Chlorine	(050060)	( )			
Flow	(074060)	(X)	.0213 MG @ 24 hrs	LB	1/17/96

IV. TRANSPORTATION OF SAMPLE: Bus ( ) RO Vehicle ( ) Other ( )

V. LABORATORY: Received By Kathy Farris Date 1/18/96 Time 0900
Recorded By Dot Lewis Date Sent to State Office 2-9-96

Analysis	Computer Code	Request	Result		Analyst	Date Measured
BOD_5	(000310)	(X)	5.0	mg/1	DS	*1/19/96
COD	(000340)	( )		mg/1		
TOC	(000680)	( )		mg/1		
Suspended Solids	(099000)	(X)	32.0	mg/1	DS	1/19/96
TKN	(000625)	( )		mg/1		
Ammonia-N	(000610)	( )		mg/1		
Fecal Coliform(1)	(074055)	( )		colonies/100 ml		*
Fecal Coliform(2)	(074055)	( )		colonies/100 ml		*
Total Phosphorus	(000665)	( )		mg/1		
Oil and Grease(1)	(000550)	(X)	<5.0	mg/1	KF	1/31/96
Oil and Grease(2)	(000550)	( )		mg/1		
Chlorides	(099016)	( )		mg/1		
Phenol	(032730)	(X)	<0.05	mg/1	KF	1/24/96
Total Chromium	(001034)	( )		mg/1		
Hex. Chromium	(001032)	( )		mg/1		
Zinc	(001092)	( )		mg/1		
Copper	(001042)	( )		mg/1		
Lead	(017501)	( )		mg/1		
Cyanide	(000722)	( )		mg/1		

Remarks SEE ATTACHED SHEETS

*Date of Test Initiation

BUREAU OF POLLUTION CONTROL
SAMPLE REQUEST FORM

Lab Bench No. _____

I. GENERAL INFORMATION: Facility Name KOPPERS INDUSTRIES
County Code GRENADA 043 NPDES Permit No. MSP090300
Discharge No. 001 Date Requested 1/96
Sample Point Identification TOTAL FACILITY DISCHARGE
Requested By COMP.MONIT. Data To
Type of Sample: Grab (X) Composite (Flow) (Time X) Other ( )

II. SAMPLE IDENTIFICATION:
Environment Condition PARTLY CLOUDY MILD Collected By L. BURRELL
Where Taken FROM ACCESS PORT

	Type	Parameters	Preservative	Date	Time
1.	COMPOSITE	BOD, SS	CHILL	1-17-96	1200
2.	GRAB	OIL & GREASE	H_2SO_4 pH<2	1-17-96	1200
3.	GRAB	PHENOL	H_2SO_4 pH<2	1-17-96	1200
4.	GRAB	PENTACHLOROPHENOL	COOL	1-17-96	1200
5.					

III. FIELD:

Analysis	Computer Code	Request	Results	Analyst	Date
pH	(000400)	(X)	7.4 @ 22 °C	L.B.	1-17-96
D.O.	(000300)	( )			
Temperature	(000010)	( )			
Residual Chlorine	(050060)	( )			
Flow	(074060)	(X)	.0213 MGD @24 HR	L.B.	1-17-96

IV. TRANSPORTATION OF SAMPLE: Bus ( ) RO Vehicle ( ) Other (X) SUNBELT
V. LABORATORY: Received By Kathy Farris Date 1-18-96 Time 0900
Recorded By [illegible] Date Sent to State Office 2-9-96

Analysis	Computer Code	Request	Result		Analyst	Date Measured
BOD_5	(000310)	(X)	5.0	mg/l	DS	*1-19-96
COD	(000340)	( )		mg/l		
TOC	(000680)	( )		mg/l		
Suspended Solids	(099000)	(X)	32.0	mg/l	DS	1-19-96
TKN	(000625)	( )		mg/l		
Ammonia-N	(000610)	( )		mg/l		
Fecal Coliform(1)	(074055)	( )		colonies/100 ml		*
Fecal Coliform(2)	(074055)	( )		colonies/100 ml		*
Total Phosphorus	(000665)	( )		mg/l		
Oil and Grease(1)	(000550)	(X)	<5.0	mg/l	KF	1-31-96
Oil and Grease(2)	(000550)	( )		mg/l		
Chlorides	(099016)	( )		mg/l		
Phenol	(032730)	(X)	<0.05	mg/l	KF	1-27-96
Total Chromium	(001034)	( )		mg/l		
Hex. Chromium	(001032)	( )		mg/l		
Zinc	(001092)	( )		mg/l		
Copper	(001042)	( )		mg/l		
Lead	(017501)	( )		mg/l		
Cyanide	(000722)	( )		mg/l		
		( )				
		( )				
		( )				
		( )				
		( )				
		( )				
		( )				
		( )				
		( )				
		( )				

Remarks

*Date of Test Initiation

5200 WATER

TARGET COMPOUND LIST
SEMIVOLATILE ORGANIC COMPOUNDS
IN WATER

OPCL NO.: 96-00039
ANALYSIS OF: water

MARKED: Koppers Industries
DATE RECEIVED: 1/18/96

COMPOUNDS	MQL	µg/L	COMPOUNDS	MQL	µg/L	COMPOUNDS	MQL	µg/L
Phenol	10		4-Chloro-3-methylphenol	20		Hexachlorobenzene	10	
bis(2-Chloroethyl)ether	10		2-Methylnaphthalene	10		Pentachloropohenol	50	ND
2-Chlorophenol	10		Hexachlorocyclopentadiene	10		Phenanthrene	10	
1,3-Dichlorobenzene	10		2,4,6-Trichlorophenol	10		Anthracene	10	
1,4-Dichlorobenzene	10		2,4,5-Trichlorophenol	10		Di-n-butylphthalate	10	
Benzyl alcohol	20		2-Chloronaphthalene	10		Fluoranthene	10	
1,2-Dichlorobenzene	10		2-Nitroaniline	50		Pyrene	10	
2-Methylphenol	10		Dimethylphthalate	10		Butylbenzylphthalate	10	
bis(2-Chloroisopropyl)ether	10		Acenaphtylene	10		3,3'Dichlorobenzidine	50	
4-Methylphenol	10		2,6-Dinitrotoluene	10		Benzo(a)anthracene	10	
N-Nitroso-di-n-propylamine	20		3-Nitroaniline	50		Chrysene	10	
Hexachloroethane	20		Acenaphthene	10		bis(2-Ethylhexyl)phthalate	10	
Nitrobenzene	10		2,4-Dinitrophenol	50		Di-n-octylphthalate	10	
Isophorone	10		4-Nitrophenol	50		Benzo(b)fluoranthene	10	
2-Nitrophenol	20		Dibenzofuran	10		Benzo(k)fluoranthene	10	
2,4-Dimethylphenol	10		2,4-Dinitrotoluene	10		Benzo(a)pyrene	10	
Benzoic acid	50		Diethylphthalate	10		Indeno(1,2,3-cd)pyrene	20	
bis(2-Chloroethoxy)methane	10		4-Chlorophenyl-phenylether	10		Dibenz(a,h)anthracene	20	
2,4-Dichlorophenol	10		Fluorene	10		Benzo(g,h,i)perylene	20	
1,2,4-Trichlorobenzene	10		4-Nitroaniline	50				
Naphthalene	10		4,6-Dinitro-2-methylphenol	50				
4-Chloroaniline	20		N-nitrosodiphenylamine	20				
Hexachlorobutadiene	10		4-Bromophenyl-phenylether	10				

SURROGATES	RECOVERY (%)
2-Fluorophenol	51
Phenol-d5	64
Nitrobenzene-d5	62
2-Fluorobiphenyl	75
2,4,6-Tribromophenol	88
p-Terphenyl-d14	65

Date Extracted: 01/24/1996
Date Injected: 01/25/1996
ND = None Detected
MQL = Minimum Quantifiable Level
Analyst: Jon Shell 1/26/96

Lower Detection Level = MQL X 1 = _____ µg/L

___ No peaks above 40% of internal standard.
___ Peaks above 40% of internal standard on EPA Appendx IX were identified.*
___ Peaks above 40% of internal standard not on EPA Appendix IX.**
___ Peaks above 40% of internal standard not on EPA Appendix IX were not identified.
___ Additional peaks were observed, but not examined.

COMMENTS: THIS ANALYSIS IS FOR PENTACHLOROPHENOL ONLY.

United States Environmental Protection Agency, Washington, D.C. 20460

EPA NPDES Compliance Inspection Report

Form Approved
OMB No.2040-0003
Approval Expires
7-31-85

Section A: National Data System Coding

Transaction Code	NPDES	YR/MO/DAY	Inspection Type	Inspector	Facility Type	Sched'd
N	MSP090300	99/08/19	2M	S	2	

Reserved	Facility Evaluation Rating	BI	QA	Reserved
		N	N	

Section B: Facility Data

Name and Location of Facility Inspected	Entry Time:	Permit Effective Date:
Koppers Industries, Inc. P.O. Box 160 Tie Plant, MS 38960	1130 hrs	11/14/95
	Exit Time/Date:	Permit Expiration Date: 11/13/00

Name(s) of On-Site Representative(s)	Title(s)	Phone No(s)
Mr. Tom Henderson	Plant Manager	(601) 226-4584

Name, Address of Responsible Official	Title	
Mr. Thomas Henderson Koppers Industries Inc. P.O. Box 160 Tie Plant, MS 38960	Plant Manager	
	Phone No. (601) 226-4584	Contacted YES__ NO__

Section C: Areas Evaluated During Inspection (S-Satisfactory, M-Marginal, U-Unsatisfactory, N-Not Evaluated)

N Permit	N Flow Measurement	N Pretreatment	N Operations & Maintenance
N Records/Reports	N Laboratory	N Compliance Schedules	N Sludge Disposal
N Facility Site Review	S Effluent/Receiving Waters	N Self-Monitoring Program	N Other

Section D: Summary of Findings/Comments

- See Attached Analytical Data

Names and Signatures of Inspectors	Agency/Office/Telephone	Date
Clift Jeter	Office of Pollution Control	8/19/99
Signature of Reviewer	Agency/Office	Date
	Office of Pollution Control	11/16/99

Regulatory Office Use Only

Action Taken	Date	Noncompliance / Compliance
		X

EPA Form 3560-3 (Rev. 3-85) Previous editions are obsolete

United States Environmental Protection Agency, Washington, D.C. 20460

EPA NPDES Compliance Inspection Report

Form Approved
OMB No. 2040-[illegible]
Approval Expires [illegible]

Section A: National Data System Coding

Transaction Code	NPDES	YR/MO/DAY	Inspection Type	Inspector	Facility Type	Schedule
N	MSP090300	99/03/02	C	S	2	

Reserved	Facility Evaluation Rating	BI	QA	Reserved
	N	N		

Section B: Facility Data

Name and Location of Facility Inspected	Entry Time:	Permit Effective Date:
Koppers Industries, Inc. P.O. Box 160 Tie Plant, MS 38960	0900	11/14/95
	Exit Time/Date: 1700	Permit Expiration Date: 11/13/00

Name(s) of On-Site Representative(s)	Title(s)	Phone No's
Mr. James Hatch Mr. Anthony Mayhan Mr. Tom Henderson	Assistant Plant Manager Environmental Manager Plant Manager	(601) 226-4584

Name, Address of Responsible Official	Title	
Mr. Thomas Henderson Koppers Industries Inc. P.O. Box 160 Tie Plant, MS 38960	Plant Manager	
	Phone No. (601) 226-4584	Contacted YES__ NO__

Section C: Areas Evaluated During Inspection (S-Satisfactory, M-Marginal, U-Unsatisfactory, N-Not Evaluated)

S Permit	S Flow Measurement	S Pretreatment	S Operations & Maintenance
S Records/Reports	N Laboratory	N Compliance Schedules	S Sludge Disposal
S Facility Site Review	N Effluent/Receiving Waters	S Self-Monitoring Program	N Other

Section D: Summary of Findings/Comments

See attached Sheet

Names and Signatures of Inspectors	Agency/Office/Telephone	Date
Russ Twitty	Office of Pollution Control	3/2/99
Signature of Reviewer	Agency/Office	Date
[signature]	Office of Pollution Control	5/3/99

Regulatory Office Use Only

Action Taken	Date	Noncompliance
		X Compliance

EPA Form 3560-3 (Rev. 3-85) Previous editions are obsolete

SECTION D: SUMMARY OF FINDINGS/COMMENTS

Permit: A copy of the facility's Pretreatment permit was readily available for reference. No unpermitted discharges were identified.

Records/Reports: Records associated with Pretreatment compliance are on file since commencement of discharging treated wastewater from the facility. Documentation includes the date/time/location of sample collection, as well as the individual collecting the sample. The date/time/analytical results/method reference no. of each sample analysis is also documented. Samples for laboratory analysis are collected by Koppers personnel and shipped by courier to EDL in Hattiesburg for analysis. Documentation verifies proper sample preservation is practiced. Review of selected analytical results support final data reported on the corresponding DMR. **Facility needs to document calibration of pH meter before each use. Documentation should include the date, time, standard solution used (i.e., 4.0, 7.0 and/or 10.0), required adjustments and the name of the person who performs the calibration.**

Facility Site Review: The source of wastewater is process wastewater associated with wood preservation with pentachlorophenol and creosote. The wastewater is treated via an activated sludge treatment facility preceded by an oil and water separator and discharged into the City of Grenada's sewer system. No other outfall or fugitive run-off was noticed upon inspection.

Flow Measurement: The final effluent is pumped to the City of Grenada's wastewater treatment facility. Flow is measured with a Kent Totalizer Flow Meter. Calibration of the meter is performed once/month. As the meter is a totalizer, the meter output is read and recorded daily.

Self-Monitoring Program: Grab and composite samples are collected in accordance with conditions and requirements prescribed by the permit. As noted above, proper preservation and sample containers are employed. **The standard solutions used to calibrate the pH meter had expired. Those solutions need to be replaced.**

Operations & Maintenance: The water/wastewater treatment systems are maintained and operated 24 hours/day, 7 days/week. The activated sludge tank, the clarifier and the final holding tank employed by the wastewater treatment system are well maintained. At the time of this inspection, all treatment units were in operation. An O & M manual is available for the wastewater treatment system which is referenced to maintain optimum treatment efficiency and to troubleshoot problems that may not be corrected based upon previous experience.

United S[illegible] Environmental Protection Agency, Washington, [illegible] 20460

EPA

NPDES Compliance Inspection Report

Form Approved
OMB No.2040-0003
Approval Expires
7-31-85

Section A: National Data System Coding

Transaction Code	NPDES	YR/MO/DAY	Inspection Type	Inspector	Facility Type	Sched'd
N	MSP090300	98/07/09	C	S	2	

Reserved	Facility Evaluation Rating	BI	QA	Reserved
	N	N		

Section B: Facility Data

Name and Location of Facility Inspected	Entry Time:	Permit Effective Date:
Koppers Industries, Inc. P.O. Box 160 Tie Plant, MS 38960	1330	11/14/95
	Exit Time/Date: 1530	Permit Expiration Date: 11/13/00

Name(s) of On-Site Representative(s)	Title(s)	Phone No(s)
Mr. John Cummings Mr. Monroe Harper	Maintenance Supervisor Maintenance	(601) 226-4584

Name, Address of Responsible Official	Title	
Mr. Thomas Henderson Koppers Industries Inc. P.O. Box 160 Tie Plant, MS 38960	Plant Manager	
	Phone No. (601) 226-4584	Contacted YES__ NO__

Section C: Areas Evaluated During Inspection (S-Satisfactory, M-Marginal, U-Unsatisfactory, N-Not Evaluated)

S Permit	S Flow Measurement	S Pretreatment	S Operations & Maintenance
S Records/Reports	N Laboratory	N Compliance Schedules	S Sludge Disposal
S Facility Site Review	N Effluent/Receiving Waters	S Self-Monitoring Program	N Other

Section D: Summary of Findings/Comments

See attached Sheet

Names and Signatures of Inspectors	Agency/Office/Telephone	Date
Russ Twitty	Office of Pollution Control	7/13/98
Signature of Reviewer	Agency/Office	Date
[signature]	Office of Pollution Control	7/13/98

Regulatory Office Use Only

Action Taken	Date	Noncompliance / Compliance
		X

EPA Form 3560-3 (Rev. 3-85) Previous editions are obsolete

SECTION D: SUMMARY OF FINDINGS/COMMENTS

Permit: A copy of the facility's Pretreatment permit was readily available for reference. No unpermitted discharges were identified.

Records/Reports: Records associated with Pretreatment compliance are on file since commencement of discharging treated wastewater from the facility. Documentation includes the date/time/location of sample collection, as well as the individual collecting the sample. The date/time/analytical results/method reference no. of each sample analysis is also documented. Samples for laboratory analysis are collected by Koppers personnel and shipped by courier to EDL in Hattiesburg for analysis. Documentation verifies proper sample preservation is practiced. Review of selected analytical results support final data reported on the corresponding DMR. Calibration documentation of the pH meter is maintained and satisfactorily performed.

Facility Site Review: The source of wastewater is process wastewater associated with wood preservation with pentachlorophenol and creosote. The wastewater is treated via an activated sludge treatment facility preceded by an oil and water separator and discharged into the City of Grenada's sewer system. No other outfall or fugitive run-off was noticed upon inspection.

Flow Measurement: The final effluent is pumped to the City of Grenada's wastewater treatment facility. Flow is measured with a Kent Totalizer Flow Meter. Calibration of the meter is performed once/month. As the meter is a totalizer, the meter output is read and recorded daily.

Self-Monitoring Program: Grab and composite samples are collected in accordance with conditions and requirements prescribed by the permit. **The collection tubing on the composite sampler needed replaced.** As noted above, proper preservation and sample containers are employed. In-house lab QA/QC and calibration documentation is well documented. There were no indications that the self-monitoring program does not generate accurate and reliable effluent monitoring data.

Operations & Maintenance: The water/wastewater treatment systems are maintained and operated 24 hours/day, 7 days/week. The activated sludge tank, the clarifier and the final holding tank employed by the wastewater treatment system are well maintained. At the time of this inspection, all treatment units were in operation. An O & M manual is available for the wastewater treatment system which is referenced to maintain optimum treatment efficiency and to troubleshoot problems that may not be corrected based upon previous experience.

BUREAU OF POLLUTION CONTROL
SAMPLE REQUEST FORM

Lab Bench No.:2959
Cost Code: 3958

I. GENERAL INFORMATION:

Facility Name: Koppers Co.
County Code: 043
Discharge No: 001
Sample Point Identification:Process wastewater
Requested By: Comp. Monit.
Type of Sample: Grab: Composite: Flow: Time:X Other:

NPDES Permit No.: 90300
Date Requested: 11/97
Data To: Tracy Thompson TAT

II. SAMPLE IDENTIFICATION:

Environment Condition: Cloudy/Cool
Where Taken: Effluent spiket
Collected By: C.Jeter

	Type	Parameters	Preservative	Date	Time
1.	Comp.	BOD, SS	Cool 4°	12/2/97	1100
2.	Grab	Phenols	Cool 4°	12/2/97	1100
3.	Grab	Pentachlorphenol	Cool 4°	12/2/97	1100
4.	Grab	Oil & Grease	5 ml H_3SO_4	12/2/97	1100
5.	Comp.	Cu, Cr, As	5 ml HNO_3	12/2/97	1100
6.					

III. FIELD:

Analysis	Computer Code	Req	Results	Analyst	Date
pH	000400	X	7.94	CJ	12/2/97
D.O.	000300				
Temperature	000010				
ResidualChlorine	050060				
Flow	074060	X	.015	CJ	12/2/97

IV. TRANSPORTATION OF SAMPLE:

Bus: RO Vehicle: Other: SUNBELT

V. LABORATORY:

Received by: Kathy Farris Date: 12/3/97 Time: 0945
Recorded by: Dot Lewis Date Sent to State Office: 2/3/98

VI. Remarks:

TARGET COMPOUND LIST
WET CHEMISTRY PARAMETERS

Lab Bench No.: 2959

Analysis	Computer Req Code		Result		Analyst	Date Measured or Date Test Initiated
BD	000310	X	9.0	mg/l	KF	12/3/97
COD	000340			mg/l		
TOC	000680			mg/l		
Suspended Solids	099000	X	70.0	mg/l	KF	12/5/97
TKN	000625			mg/l		
Ammonia-N	000610			mg/l		
Fecal Coliform	074055			colonies/100ml		
Total Phosphorous	000665			mg/l		
Oil & Grease	000550	X	< 5.0	mg/l	KF	12/8/97
Chlorides	099016			mg/l		
Phenol	032730	X	0.05	mg/l	KF	12/9/97
Cyanide	000722			mg/l		
Nitrate-Nitrite	000630			mg/l		
Alkalinity	000410			mg/l		
Hardness	000900			mg/l		

Remarks:

++++

INORGANICS REPORT
WATER

SAMPLE No.: 2959

ANALYSES: _____ **DATE COLLECTED:** _____

PARAMETER	CONC. ug/l	MQL ug/l	QC %Rec.	Analyst	Date
Arsenic	ND	5.0	109	GB	12/16/97
Chromium	102.0	1.0	103	GB	12/16/97
Copper	62.0	5.0	92	JC	1/22/98
Selenium	ND	5.0	80	GB	12/16/97

MQL = minimum quantifiable levels
QC %Rec = percent recovery of quality control standard

TARGET COMPOUND LIST
PENTACHLOROPHENOL
IN WATER

OPCL NO.: 2959 MARKED: Koppers

ANALYSIS OF: Water DATE RECEIVED: 12/3/97

COMPOUNDS	MQL	µg/L
Pentachlorophenol	50	ND

SURROGATES	RECOVERY (%)	LIMITS
2-Fluorophenol	60	21 - 100
Phenol-d5	71	10 - 94
2,4,6-Tribromophenol	72	10 - 123

Date Extracted: 12 /8 / 1997
Date Injected: 12/ 8 / 1997
ND = None Detected
MQL = Minimum Quantifiable Level

Analyst: Jon Shell

Lower Detection Level = MQL X _____ = _____ Ug/l

COMMENTS: This analysis is for pentachlorophenol only

BUREAU OF POLLUTION CONTROL
SAMPLE REQUEST FORM

Lab Bench No. _____

I. GENERAL INFORMATION: Facility Name Koppers Co.
County Code 043 NPDES Permit No. 90300
Discharge No. 001 Date Requested NOV 97
Sample Point Identification Process Wastewater
Requested By Compliance Monitoring Data To Tracy Thompson
Type of Sample: Grab ( ) Composite (Flow) (Time X) Other ( )

II. SAMPLE IDENTIFICATION:
Environment Condition Cloudy, Cool Collected By CLIFT JETER
Where Taken Effluent Spiket

	Type	Parameters	Preservative	Date	Time
1.	Comp	BOD, SS	Cool 4°	12-2-97	1000
2.	Grab	Phenols	Cool 4°	12-2-97	1000
3.	Grab	Pentachlorophenol	Cool 4°	12-2-97	1000
4.	Grab	Oil & Grease	5ml H_2SO_4	12-2-97	1000
5.	Comp	Cu, Cr, As	5ml HNO_3	12-2-97	1000

III. FIELD:

Analysis	Computer Code	Request	Results	Analyst	Date
pH	(000400)	(X)	7.94	CJ	12-2-97
D.O.	(000300)	( )			
Temperature	(000010)	( )			
Residual Chlorine	(050060)	( )			
Flow	(074060)	(X)	.015	CJ	12-2-97

IV. TRANSPORTATION OF SAMPLE: Bus ( ) RO Vehicle ( ) Other (X) Sunbelt

V. LABORATORY: Received By Kathy Farris Date 12-3-97 Time 0945
Recorded By _____ Date Sent to State Office _____

Analysis	Computer Code	Request	Result	Analyst	Date Measured
BOD_5	(000310)	(X)	9.0 mg/1	KF	*12-3-97
COD	(000340)	( )	mg/1		
TOC	(000680)	( )	mg/1		
Suspended Solids	(099000)	(X)	70.0 mg/1	KF	12-5-97
TKN	(000625)	( )	mg/1		
Ammonia-N	(000610)	( )	mg/1		
Fecal Coliform(1)	(074055)	( )	colonies/100 ml		*
Fecal Coliform(2)	(074055)	( )	colonies/100 ml		*
Total Phosphorus	(000665)	( )	mg/1		
Oil and Grease(1)	(000550)	(X)	<5.0 mg/1	KF	12-8-97
Oil and Grease(2)	(000550)	( )	mg/1		
Chlorides	(099016)	( )	mg/1		
Phenol	(032730)	(X)	<0.05 mg/1	KF	12-9-97
Total Chromium	(001034)	( )	mg/1		
Hex. Chromium	(001032)	( )	mg/1		
Zinc	(001092)	( )	mg/1		
Copper	(001042)	( )	mg/1		
Lead	(017501)	( )	mg/1		
Cyanide	(000722)	( )	mg/1		
		( )			
		( )			
		( )			
		( )			
		( )			
		( )			
		( )			
		( )			
		( )			
		( )			

Remarks _____

*Date of Test Initiation

5200 Mark Goode 2959 2959

BUREAU OF POLLUTION CONTROL
SAMPLE REQUEST FORM

Lab Bench No.: 108
Cost Code: 3200

I. GENERAL INFORMATION:

Facility Name: Koppers
County Code: Grenada
Discharge No: 001
Sample Point Identification: Process ww
Requested By: Compliance Monitoring
Type of Sample: Grab: X Composite: Flow: Time: X Other:

NPDES Permit No.: 90300
Date Requested: 1/97
Data To: Bryan Collins

II. SAMPLE IDENTIFICATION:

Environment Condition: Cloudy/mild
Where Taken: Effluent spiket
Collected By: C.Jeter

	Type	Parameters	Preservative	Date	Time
1.	Comp	BOD,SS	Cool 4°	1/22/97	1030
2.	Comp	Cu,Cr,As	5 ml HNO_3	1/22/97	1030
3.	Grab	Phenols	5 ml H_2SO_4	1/22/97	1030
4.	Grab	Pentachlorophenol	Cool 4°	1/22/97	1030
5.	Grab	Oil & Grease	5 ml H_2SO_4	1/22/97	1030

III. FIELD:

Analysis	Computer Code	Req	Results	Analyst	Date
pH	000400	X	7.16	CJ	1/22/97
D.O.	000300				
Temperature	000010				
ResidualChlorine	050060				
Flow	074060	X	0.011 MGD	CJ	1/22/97

IV. TRANSPORTATION OF SAMPLE:

Bus: RO Vehicle: Other: Sunbelt

V. LABORATORY:

Received by: Kathy Farris
Recorded by: Dot Lewis
Date: 1/23/97 Time:0920
Date Sent to State Office: 3/18/97

VI. Remarks:

TARGET COMPOUND LIST
WET CHEMISTRY PARAMETERS

Lab Bench No.: 108

Analysis	Computer Code	Req	Result		Analyst	Date Measured or Date Test Initiated
BOD_5	000310	X	<13.0	mg/l	VS	1/23/97
COD	000340	X	249.0	mg/l	VS	1/29/97
TOC	000680			mg/l		
Suspended Solids	099000	X	82.0	mg/l	VS	1/24/97
TKN	000625			mg/l		
Ammonia-N	000610			mg/l		
Fecal Coliform (1)	074055			colonies/100 ml		
Total Phosphorous	000665			mg/l		
Oil & Grease	000550	X	<5.0	mg/l	KF	2/3/97
Chlorides	099016			mg/l		
Phenol	032730	X	0.18	mg/l	KF	1/29/97
Total Chromium	001034			mg/l		
Hex. Chromium	001032			mg/l		
Cyanide	000722			mg/l		

Remarks:

++++

TARGET COMPOUND LIST
PHENOLS
IN WATER

OPCL NO.: 96-108 MARKED: Koppers

ANALYSIS OF: Water DATE RECEIVED: 1/23/97

Compounds	MQL	ug/l	Compounds	MQL	ug/l
Phenol	10	ND	4-Chloro-3-methylphenol	20	ND
2-Chlorophenol	10	ND	2,4,6-Trichlorophenol	10	ND
2-Methylphenol	10	ND	2,4,5-Trichlorophenol	10	ND
4-Methylphenol	10	ND	2,4-Dinitrophenol	50	ND
2-Nitrophenol	10	ND	4-Nitrophenol	50	ND
2.4-Dimethylphenol	10	ND	4,6-Dinitro-2-methylphenol	50	ND
2,4-Dichlorophenol	10	ND	Pentachlorophenol	50	ND

SURROGATES	RECOVERY (%)
2-Fluorophenol	92.9
Phenol-d5	64.4
Nitrobenzene-d5	82.3
2-Fluorobiphenyl	58.4
2,4,6-Tribromophenol	92.9
p-Terphenyl-d14	63.1

ND = None Detected above MQL
MQL = Minimum Quantifiable Level

John Shell 2/18/97
Analyst

Lower Detection Level = MQL X 5 = _____ Ug/l

COMMENTS: This analysis is for phenol only. None were detected.

+++++

INORGANICS REPORT
WATER

SAMPLE No.: 97-108

ANALYSES: Water **DATE COLLECTED:** 1/22/97

PARAMETER	CONC. ug/l	MQL ug/l	QC %Rec.	Analyst	Date
Arsenic	11.0	5.0	100	GB	3/4/97
Chromium	ND	1.0	110	GB	1/31/97
Copper	ND	5.0	84	GB	2/25/97

MQL = minimum quantifiable levels
QC %Rec = percent recovery of quality control standard

BUREAU OF POLLUTION CONTROL
SAMPLE REQUEST FORM

Lab Bench No. _____

I. GENERAL INFORMATION: Facility Name KOPPERS
County Code GRENADA NPDES Permit No. 90300
Discharge No. 001 Date Requested JAN/97
Sample Point Identification PROCESS WW
Requested By COMP.MONIT. Data To BRIAN COLLINS
Type of Sample: Grab (X) Composite (Flow) (Time X) Other ( )

II. SAMPLE IDENTIFICATION:
Environment Condition Cloudy, Mild Collected By CLIFT JETER
Where Taken Effluent Spiket

	Type	Parameters	Preservative	Date	Time
1.	COMP.	BOD, SS	Cool 4°	1-22-97	1030
2.	COMP.	Cu,Cr,As	5ml HNO3	1-22-97	1030
3.	GRAB	Phenols	5ml H2SO4	1-22-97	1030
4.	GRAB	Pentechlorophenal	Cool 4°	1-22-97	1030
5.	GRAB	OIL & GREASE	5ml H2SO4	1-22-97	1030

III. FIELD:

Analysis	Computer Code	Request	Results	Analyst	Date
pH	(000400)	(X)	7.16	CJ	1-22-97
D.O.	(000300)	( )			
Temperature	(000010)	( )			
Residual Chlorine	(050060)	( )			
Flow	(074060)	(X)	0.011 mgd	CJ	1-22-97

IV. TRANSPORTATION OF SAMPLE: Bus ( ) RO Vehicle ( ) Other (X) SUNBELT

V. LABORATORY: Received By Kathy Farris Date 1-23-97 Time 0920
Recorded By _____ Date Sent to State Office _____

Analysis	Computer Code	Request	Result		Analyst	Date Measured
BOD_5	(000310)	(X)	<13.0	mg/l	VS	* 1-23-97
COD	(000340)	(X)	249.0	mg/l	VS	1-29-97
TOC	(000680)	( )		mg/l		
Suspended Solids	(099000)	(X)	82.0	mg/l	VS	1-24-97
TKN	(000625)	( )		mg/l		
Ammonia-N	(000610)	( )		mg/l		
Fecal Coliform(1)	(074055)	( )		colonies/100 ml		*
Fecal Coliform(2)	(074055)	( )		colonies/100 ml		*
Total Phosphorus	(000665)	( )		mg/l		
Oil and Grease(1)	(000550)	(X)	<5.0	mg/l	KF	2-3-97
Oil and Grease(2)	(000550)	( )		mg/l		
Chlorides	(099016)	( )		mg/l		
Phenol	(032730)	(X)	0.18	mg/l	KF	1-29-97
Total Chromium	(001034)	( )		mg/l		
Hex. Chromium	(001032)	( )		mg/l		
Zinc	(001092)	( )		mg/l		
Copper	(001042)	( )		mg/l		
Lead	(017501)	( )		mg/l		
Cyanide	(000722)	( )		mg/l		
		( )				
		( )				
		( )				
		( )				
		( )				
		( )				
		( )				
		( )				
		( )				
		( )				

Remarks _____

*Date of Test Initiation

5200 WATER

IDR

United States Environmental Protection Agency, Washington, D.C., 20460

EPA NPDES Compliance Inspection Report

Form Approved
OMB No.2040-0003
Approval Expires 7-31-85

Section A: National Data System Coding

Transaction Code	NPDES	YR/MO/DAY	Inspection Type	Inspector	Facility Type	Sched'd
N	MSP090300	96/06/10	3	S	2	May

Reserved	Facility Evaluation Rating	BI	QA	Reserved
	3	N	N	

Section B: Facility Data

Name and Location of Facility Inspected	Entry Time:	Permit Effective Date:
Koppers Industries, Inc. P. O. Box 160 Tie Plant, Mississippi 38960	Exit Time/Date: NA	95/11/14
		Permit Expiration Date: 2000/11/13

Name(s) of On-Site Representative(s)	Title(s)	Phone No(s)

Name,Address of Responsible Official	Title	Contacted
Mr. Tommy Henderson	Plant Manager	YES X NO_
	Phone No. 601-226-4584	

Section C: Areas Evaluated During Inspection (S-Satisfactory, M-Marginal, U-Unsatisfactory, N-Not Evaluated)

N Permit	N Flow Measurement	S Pretreatment	M Operations & Maintenance
U Records/Reports	N Laboratory	N Compliance Schedules	N Sludge Disposal
M Facility Site Review	N Effluent/Receiving Waters	N Self-Monitoring Program	N Other

Section D: Summary of Findings/Comments

I met with Mr. Henderson and inspected the facility. I found sludge in the bottom of the final effluent tank. The clarifier had some floating biomass overflowing into the effluent weir and it appears to be settling out in the final effluent tank. There appeared to be a design or construction flaw in the clarifier water surface racking system. However, some current laboratory analysis indicated compliance with the permit limitations. A file review indicated an error in calculating the daily loading and monthly average loading values reported on the Discharge Monitoring Reports (DMR). I demonstrated the correct way to calculate the values and will enclose a written example with this report. No other problems were noted during the inspection.

Names and Signatures of Inspectors	Agency/Office/Telephone	Date
Bryan D. Collins Bryan D. Collins, P.E.	Office of Pollution Control	96/06/18
Signature of Reviewer	Agency/Office: Office of Pollution Control	Date

Regulatory Office Use Only

Action Taken	Date	
		Noncompliance Compliance

EPA Form 3560-3 (Rev. 3-85) Previous editions are obsolete

United States Environmental Protection Agency
Washington, D. C. 20460

EPA NPDES Compliance Inspection Report

Form Approved
OMB No. 2040-0003
Approval Expires 7-31-85

Section A: National Data System Coding

Transaction Code	NPDES	yr/mo/day	Inspection Type	Inspector	Fac Type	Math Inf Sched
1 M 2 5	3 M S P 0 9 0 3 0 0 11	12 9 6 0 1 1 7 17	18 2 M	19 S	20 2	J a n

Remarks 21

Reserved	Facility Evaluation Rating	BI	QA	Reserved
67 69	70	71	72	73 74 75 80

Section B: Facility Data

Name and Location of Facility Inspected	Entry Time	Permit Effective Date
Koppers Industries P.O. Box 160 Tie Plant, Mississippi 38960	9:00 ☒ AM ☐ PM	95/11/14
	Exit Time/Date	Permit Expiration Date 2000/11/13

Name(s) of On-Site Representative(s)	Title(s)	Phone No(s)
Ronald Murphey	Plant Manager	(601) 226-4584

Name, Address of Responsible Official	Title	Contacted
	Phone No.	☐ Yes ☐ No

Section C: Areas Evaluated During Inspection

(S = Satisfactory, M = Marginal, U = Unsatisfactory, N = Not Evaluated)

N	Permit	N	Flow Measurement	N	Pretreatment	N	Operations & Maintenance
N	Records/Reports	N	Laboratory	N	Compliance Schedules	N	Sludge Disposal
N	Facility Site Review	S	Effluent/Receiving Waters	N	Self-Monitoring Program	N	Other:

Section D: Summary of Findings/Comments *(Attach additional sheets if necessary)*

Name(s) and Signature(s) of Inspector(s)	Agency/Office/Telephone	Date
L. Burrell	DEQ	96/01/17

Signature of Reviewer	Agency/Office	Date
[signature]	DEQ/OPC	96/07/11

Regulatory Office Use Only

Action Taken	Date	Compliance Status
		☐ Noncompliance ☐ Compliance

EPA Form 3560-3 (Rev. 9-85)

PERMITTEE NAME/ADDRESS *(Include Facility Name/Location if Different)*

NAME: KOPPERS INDUSTRIES INC

ADDRESS: P O BOX 160
TIE PLANT MS 38960

Grenada Co.

FACILITY LOCATION

ATTN: THOMAS L HENDERSON

NATIONAL POLLUTANT DISCHARGE ELIMINATION SYSTEM *(NPDES)*
DISCHARGE MONITORING REPORT *(DMR)*

PERMIT NUMBER (2-16)	DISCHARGE NUMBER (17-19)
MSP090300	001 A

MONITORING PERIOD

	YEAR	MO	DAY		YEAR	MO	DAY
FROM	00	12	01	TO	00	12	31
	(20-21)	(22-23)	(24-25)		(26-27)	(28-29)	(30-31)

MINOR
(SUBR NO)
F - FINAL
TOTAL FACILITY DISCHARGE

*** NO DISCHARGE ***

Form Approved.
OMB No. 2040-0004
Approval expires 05-31-98

RECEIVED JAN 22 2001 DEQ

NOTE: Read Instructions before completing this form.

PARAMETER (32-37)		(3 Card Only) QUANTITY OR LOADING (46-53) AVERAGE	(54-61) MAXIMUM	UNITS	(4 Card Only) QUANTITY OR CONCENTRATION (38-45) MINIMUM	(46-53) AVERAGE	(54-61) MAXIMUM	UNITS	NO. EX (62-63)	FREQUENCY OF ANALYSIS (64-68)	SAMPLE TYPE (69-70)
BOD, 5-DAY (20 DEG. C) 00310 1 0 0 EFFLUENT GROSS VALUE	SAMPLE MEASUREMENT	5.388	7.368	(26) LBS/DY	******	31.8	46.5	(19) MG/L	0	1/7 WEEKLY	C COMP24
	PERMIT REQUIREMENT	70 MO AVG	140 DAILY MX		******	240 MO AVG	480 DAILY MX				
00400 1 0 0 EFFLUENT GROSS VALUE	SAMPLE MEASUREMENT	******	******		7.9	******	8.3	(12) SU	0	2/7 TWICE/WEEK	G GRAB
	PERMIT REQUIREMENT	******	******	**** ****	5.5 MINIMUM	******	9.5 MAXIMUM				
SOLIDS, TOTAL SUSPENDED 00530 1 0 0 EFFLUENT GROSS VALUE	SAMPLE MEASUREMENT	47.512	48.436	(26) LBS/DY	******	268.5	294	(19) MG/L	0	1/7 WEEKLY	C COMP24
	PERMIT REQUIREMENT	88 MO AVG	175 DAILY MX		******	300 MO AVG	600 DAILY MX				
OIL & GREASE (FREON EXTR.-IR METH) TOT, RC 00560 1 0 0 EFFLUENT GROSS VALUE	SAMPLE MEASUREMENT	NODI=B	NODI=B	(01) lbs ~~KG~~/DAY	******	NODI=B	NODI=B	(19) MG/L	0	1/7 WEEKLY	G GRAB
	PERMIT REQUIREMENT	REPORT MO AVG	29.2 DAILY MX		******	REPORT MO AVG	100 DAILY MX				
PENTACHLOROPHENOL 39032 1 0 0 EFFLUENT GROSS VALUE	SAMPLE MEASUREMENT	0.4263	0.8451	(01) lbs ~~KG~~/DAY	******	2.1435	4.24	(19) MG/L	1	1/7 WEEKLY	G GRAB
	PERMIT REQUIREMENT	.053 MO AVG	.102 DAILY MX		******	.18 MO AVG	.36 DAILY MX				
PHENOLS 34030 1 0 0 EFFLUENT GROSS VALUE	SAMPLE MEASUREMENT	0.0286	0.0478	(01) LBS ~~KG~~/DAY	******	0.15	0.24	(19) MG/L	0	1/7 WEEKLY	G GRAB
	PERMIT REQUIREMENT	.88 MO AVG	1.75 DAILY MX		******	3 MO AVG	6 DAILY MX				
FLOW, IN CONDUIT OR THRU TREATMENT PLANT 50050 1 0 0 EFFLUENT GROSS VALUE	SAMPLE MEASUREMENT	0.022458	0.0322	(03) MGD	******	******	******	**** ****	0	Daily Contin.	
	PERMIT REQUIREMENT	REPORT MO AVG	0.035 DAILY MX		******	******	******			DAILY	CONTIN

NAME/TITLE PRINCIPAL EXECUTIVE OFFICER		TELEPHONE	DATE		
Thomas L Henderson / Plant Manager	I CERTIFY UNDER PENALTY OF LAW THAT I HAVE PERSONALLY EXAMINED AND AM FAMILIAR WITH THE INFORMATION SUBMITTED HEREIN; AND BASED ON MY INQUIRY OF THOSE INDIVIDUALS IMMEDIATELY RESPONSIBLE FOR OBTAINING THE INFORMATION, I BELIEVE THE SUBMITTED INFORMATION IS TRUE, ACCURATE AND COMPLETE. I AM AWARE THAT THERE ARE SIGNIFICANT PENALTIES FOR SUBMITTING FALSE INFORMATION, INCLUDING THE POSSIBILITY OF FINE AND IMPRISONMENT. SEE 18 U.S.C. § 1001 AND 33 U.S.C. § 1319. *(Penalties under these statutes may include fines up to $10,000 and or maximum imprisonment of between 6 months and 5 years.)*	Thomas L Henderson	662 226-4584	01	1	15
TYPED OR PRINTED		SIGNATURE OF PRINCIPAL EXECUTIVE OFFICER OR AUTHORIZED AGENT	AREA CODE	NUMBER	YEAR MO DAY

COMMENTS AND EXPLANATION OF ANY VIOLATIONS *(Reference all attachments here)*

See attached letters

95) Previous editions may not be used. (REPLACES EPA FORM T-40 WHICH MAY NOT BE USED.)

00586/000119-1202

PERMITTEE NAME/ADDRESS (Include Facility Name/Location if Different)

NAME [illegible]

ADDRESS [illegible]

FACILITY

LOCATION

[illegible]

NATIONAL POLLUTANT DISCHARGE ELIMINATION SYSTEM (NPDES)
DISCHARGE MONITORING REPORT (DMR)

Form Approved.
OMB No. 2040-0004
Approval expires 05-31-98

RECEIVED DEC 21 2000 DEQ

PERMIT NUMBER (2-16)	DISCHARGE NUMBER (17-19)
[illegible]	[illegible]

MONITORING PERIOD	YEAR	MO	DAY		YEAR	MO	DAY
FROM	[illegible]	11	[illegible]	TO	[illegible]	11	[illegible]
	(20-21)	(22-23)	(24-25)		(26-27)	(28-29)	(30-31)

NOTE: Read Instructions before completing this form.

PARAMETER (32-37)		(3 Card Only) QUANTITY OR LOADING (46-53) AVERAGE	(54-61) MAXIMUM	UNITS	(4 Card Only) QUANTITY OR CONCENTRATION (38-45) MINIMUM	(46-53) AVERAGE	(54-61) MAXIMUM	UNITS	NO. EX (62-63)	FREQUENCY OF ANALYSIS (64-68)	SAMPLE TYPE (69-70)
[illegible]	SAMPLE MEASUREMENT	4.038	9.977	(25)	******	18.75	37.50	(19)	0	1/7	C
	PERMIT REQUIREMENT	70 MO AVG	140 DAILY MX	LBS/DY	******	240 MO AVG	480 DAILY MX	MG/L		WEEKLY	COMP24
[illegible]	SAMPLE MEASUREMENT	******	******		7.65	******	8.95	(12)	0	2/7	G
	PERMIT REQUIREMENT	******	******	**** ****	5.5 MINIMUM	******	9.5 MAXIMUM	SU		TWICE/WEEK	GRAB
[illegible]	SAMPLE MEASUREMENT	54.99	126.64	(25)	******	239.25	476	(19)	0	1/7	C
	PERMIT REQUIREMENT	88 MO AVG	175 DAILY MX	LBS/DY	******	300 MO AVG	600 DAILY MX	MG/L		WEEKLY	COMP24
[illegible]	SAMPLE MEASUREMENT	NODI=B	NODI=B	lbs/DY ~~MG/L~~	******	NODI=B	NODI=B	(19)	0	1/7	G
	PERMIT REQUIREMENT	REPORT MO AVG	29.2 DAILY MX		******	REPORT MO AVG	100 DAILY MX	MG/L		WEEKLY	GRAB
[illegible]	SAMPLE MEASUREMENT	0.0087	0.0141	lbs/DY ~~MG/L~~	******	0.0445 ~~0.4~~	0.061	(19)	0	1/7	G
	PERMIT REQUIREMENT	.053 MO AVG	.102 DAILY MX		******	.18 MO AVG	.36 DAILY MX	MG/L		WEEKLY	GRAB
[illegible]	SAMPLE MEASUREMENT	0.01242	0.0252	lbs/DY ~~MG/L~~	******	0.1	0.27	(19)	0	1/7	G
	PERMIT REQUIREMENT	.88 MO AVG	1.75 DAILY MX		******	3 MO AVG	6 DAILY MX	MG/L		WEEKLY	GRAB
[illegible]	SAMPLE MEASUREMENT	0.02209	0.0341	(32)	******	******	******		0	Daily	Contin.
	PERMIT REQUIREMENT	REPORT MO AVG	0.035 DAILY MX		******	******	******	**** ****		DAILY	CONTI

NAME/TITLE PRINCIPAL EXECUTIVE OFFICER

Steve Joy Assist. plant mgr.

TYPED OR PRINTED

I CERTIFY UNDER PENALTY OF LAW THAT I HAVE PERSONALLY EXAMINED AND AM FAMILIAR WITH THE INFORMATION SUBMITTED HEREIN; AND BASED ON MY INQUIRY OF THOSE INDIVIDUALS IMMEDIATELY RESPONSIBLE FOR OBTAINING THE INFORMATION, I BELIEVE THE SUBMITTED INFORMATION IS TRUE, ACCURATE AND COMPLETE. I AM AWARE THAT THERE ARE SIGNIFICANT PENALTIES FOR SUBMITTING FALSE INFORMATION, INCLUDING THE POSSIBILITY OF FINE AND IMPRISONMENT. SEE 18 U.S.C. § 1001 AND 33 U.S.C. § 1319. (Penalties under these statutes may include fines up to $10,000 and or maximum imprisonment of between 6 months and 5 years.)

Steve Joy

SIGNATURE OF PRINCIPAL EXECUTIVE OFFICER OR AUTHORIZED AGENT

TELEPHONE		DATE		
AREA CODE	NUMBER	YEAR	MO	DAY
662	226-4584	00	12	19

COMMENTS AND EXPLANATION OF ANY VIOLATIONS (Reference all attachments here)

KG/DAY should be lbs/DAY

EPA Form 3320-1 (08-95) Previous editions may not be used. (REPLACES EPA FORM T-40 WHICH MAY NOT BE USED.)

[illegible]

PERMITTEE NAME/ADDRESS (Include Facility Name/Location if Different)

NAME [illegible]

ADDRESS [illegible]

FACILITY

LOCATION

[illegible]

Grenada Co.

NATIONAL POLLUTANT DISCHARGE ELIMINATION SYSTEM (NPDES)
DISCHARGE MONITORING REPORT (DMR)

(2-16) PERMIT NUMBER	(17-19) DISCHARGE NUMBER
[illegible]	[illegible]

Melissa

Form Approved.
OMB No. 2040-0004
Approval expires 05-31-98

RECEIVED 1 2000 DEQ

MONITORING PERIOD	YEAR	MO	DAY		YEAR	MO	DAY
FROM	[illegible]	[illegible]	[illegible]	TO	[illegible]	[illegible]	[illegible]
	(20-21)	(22-23)	(24-25)		(26-27)	(28-29)	(30-31)

NOTE: Read Instructions before completing this form.

PARAMETER (32-37)		(3 Card Only) QUANTITY OR LOADING (46-53) AVERAGE	(54-61) MAXIMUM	UNITS	(4 Card Only) QUANTITY OR CONCENTRATION (38-45) MINIMUM	(46-53) AVERAGE	(54-61) MAXIMUM	UNITS	NO. EX (62-63)	FREQUENCY OF ANALYSIS (64-68)	SAMPLE TYPE (69-70)
[illegible]	SAMPLE MEASUREMENT	1.556	3.031	(26)	******	10.14	15.60	(19)	0	1/7	C
	PERMIT REQUIREMENT	70 MO AVG	140 DAILY MX	LBS/DY	******	240 MO AVG	480 DAILY MX	MG/L		WEEKLY	COMP24
[illegible]	SAMPLE MEASUREMENT	******	******		7.1	******	8.3	(12)	0	2/7	G
	PERMIT REQUIREMENT	******	******	**** ****	5.5 MINIMUM	******	9.5 MAXIMUM	SU		WICE/WEEK	GRAB
SOLIDS, TOTAL SUSPENDED	SAMPLE MEASUREMENT	16.643	26.008	(26)	******	117.2	242	(19)	0	1/7	C
	PERMIT REQUIREMENT	88 MO AVG	175 DAILY MX	LBS/DY	******	300 MO AVG	600 DAILY MX	MG/L		WEEKLY	COMP24
OIL & GREASE (FREON EXTR.-IR METH)TOT,[illegible]	SAMPLE MEASUREMENT	NODI=B	NODI=B	(01)	******	NODI=B	NODI=B	(1[illegible])	0	1/7	G
	PERMIT REQUIREMENT	REPORT MO AVG	29.2 DAILY MX	KG/DAY	******	REPORT MO AVG	100 DAILY MX	MG/L		WEEKLY	GRAB
PENTACHLOROPHENOL	SAMPLE MEASUREMENT	0.0098	0.0165	(01)	******	0.0644	0.085	(1[illegible])	0	1/7	G
	PERMIT REQUIREMENT	.053 MO AVG	.102 DAILY MX	lbs/DAY	******	.18 MO AVG	.36 DAILY MX	MG/L		WEEKLY	GRAB
[illegible]	SAMPLE MEASUREMENT	0.0056	0.012	(01)	******	0.042	0.09	(1[illegible])	0	1/7	G
	PERMIT REQUIREMENT	.88 MO AVG	1.75 DAILY MX	lbs/DAY	******	3 MO AVG	6 DAILY MX	MG/L		WEEKLY	GRAB
FLOW, IN CONDUIT OR THRU TREATMENT PLANT	SAMPLE MEASUREMENT	0.018287	0.0289	(03)	******	******	******		0	Daily	Contin.
	PERMIT REQUIREMENT	REPORT MO AVG	0.035 DAILY MX	MGD	******	******	******	**** ****		DAILY	CONTIN

NAME/TITLE PRINCIPAL EXECUTIVE OFFICER

Thomas L. Henderson / Plant Manager

TYPED OR PRINTED

I CERTIFY UNDER PENALTY OF LAW THAT I HAVE PERSONALLY EXAMINED AND AM FAMILIAR WITH THE INFORMATION SUBMITTED HEREIN; AND BASED ON MY INQUIRY OF THOSE INDIVIDUALS IMMEDIATELY RESPONSIBLE FOR OBTAINING THE INFORMATION, I BELIEVE THE SUBMITTED INFORMATION IS TRUE, ACCURATE AND COMPLETE. I AM AWARE THAT THERE ARE SIGNIFICANT PENALTIES FOR SUBMITTING FALSE INFORMATION, INCLUDING THE POSSIBILITY OF FINE AND IMPRISONMENT. SEE 18 U.S.C. § 1001 AND 33 U.S.C. § 1319. (Penalties under these statutes may include fines up to $10,000 and or maximum imprisonment of between 6 months and 5 years.)

Thomas L. Henderson

SIGNATURE OF PRINCIPAL EXECUTIVE OFFICER OR AUTHORIZED AGENT

TELEPHONE		DATE		
662	226-4584	00	11	22
AREA CODE	NUMBER	YEAR	MO	DAY

COMMENTS AND EXPLANATION OF ANY VIOLATIONS (Reference all attachments here)

EPA Form 3320-1 (08-95) Previous editions may not be used. (REPLACES EPA FORM T-40 WHICH MAY NOT BE USED.)

[illegible]

PAGE [illegible] OF [illegible]

PERMITTEE NAME/ADDRESS *(Include Facility Name/Location if Different)*
NAME
ADDRESS
FACILITY
LOCATION

NATIONAL POLLUTANT DISCHARGE ELIMINATION SYSTEM *(NPDES)*
DISCHARGE MONITORING REPORT *(DMR)*

Form Approved.
OMB No. 2040-0004
Approval expires 05-31-98

PERMIT NUMBER (2-16)	DISCHARGE NUMBER (17-19)

MONITORING PERIOD	YEAR	MO	DAY		YEAR	MO	DAY
FROM				TO			
	(20-21)	(22-23)	(24-25)		(26-27)	(28-29)	(30-31)

NOTE: Read Instructions before completing this form.

PARAMETER (32-37)		(3 Card Only) QUANTITY OR LOADING (46-53) AVERAGE	(54-61) MAXIMUM	UNITS	(4 Card Only) QUANTITY OR CONCENTRATION (38-45) MINIMUM	(46-53) AVERAGE	(54-61) MAXIMUM	UNITS	NO. EX (62-63)	FREQUENCY OF ANALYSIS (64-68)	SAMPLE TYPE (69-70)
	SAMPLE MEASUREMENT	0	0	LBS/DY mg/L		0	0		0	6/12	C
	PERMIT REQUIREMENT	REPORT ANNL AVG	0.131 ANNL MAX	~~LBS/DY~~		REPORT ANNL AVG	.45 ANNL MAX	mg/L		SEMI-ANNUAL	COMPZ4
	SAMPLE MEASUREMENT	0	0	LBS/DY mg/L		0	0		0	6/12	C
	PERMIT REQUIREMENT	REPORT ANNL AVG	1.168 ANNL MAX	~~LBS/DY~~		REPORT ANNL AVG	4.0 ANNL MAX	mg/L		SEMI-ANNUAL	COMPZ4
	SAMPLE MEASUREMENT	0.0023	0.0023	LBS/DY mg/L		0.01	0.01		0	6/12	C
	PERMIT REQUIREMENT	REPORT ANNL AVG	0.642 ANNL MAX	~~LBS/DY~~		REPORT ANNL AVG	2.2 ANNL MAX	mg/L		SEMI-ANNUAL	COMPZ4
	SAMPLE MEASUREMENT										
	PERMIT REQUIREMENT										
	SAMPLE MEASUREMENT										
	PERMIT REQUIREMENT										
	SAMPLE MEASUREMENT										
	PERMIT REQUIREMENT										
	SAMPLE MEASUREMENT										
	PERMIT REQUIREMENT										

NAME/TITLE PRINCIPAL EXECUTIVE OFFICER			TELEPHONE	DATE		
Steve Joy Assist plant mgr	I CERTIFY UNDER PENALTY OF LAW THAT I HAVE PERSONALLY EXAMINED AND AM FAMILIAR WITH THE INFORMATION SUBMITTED HEREIN; AND BASED ON MY INQUIRY OF THOSE INDIVIDUALS IMMEDIATELY RESPONSIBLE FOR OBTAINING THE INFORMATION, I BELIEVE THE SUBMITTED INFORMATION IS TRUE, ACCURATE AND COMPLETE. I AM AWARE THAT THERE ARE SIGNIFICANT PENALTIES FOR SUBMITTING FALSE INFORMATION, INCLUDING THE POSSIBILITY OF FINE AND IMPRISONMENT. SEE 18 U.S.C. § 1001 AND 33 U.S.C. § 1319. *(Penalties under these statutes may include fines up to $10,000 and or maximum imprisonment of between 6 months and 5 years.)*	Steve Joy	662	226-4584	00	12	19
TYPED OR PRINTED		SIGNATURE OF PRINCIPAL EXECUTIVE OFFICER OR AUTHORIZED AGENT	AREA CODE	NUMBER	YEAR	MO	DAY

COMMENTS AND EXPLANATION OF ANY VIOLATIONS *(Reference all attachments here)*

Units should be LBS/DAY

PERMITTEE NAME/ADDRESS (Include Facility Name/Location if Different) Grenada Co.

NAME

ADDRESS

FACILITY LOCATION

NATIONAL POLLUTANT DISCHARGE ELIMINATION SYSTEM (NPDES)
DISCHARGE MONITORING REPORT (DMR)

Melissa

Form Approved.
OMB No. 2040-0004
Approval expires 05-31-98

RECEIVED OCT 18 2000 DEQ

PERMIT NUMBER (2-16)	DISCHARGE NUMBER (17-19)
	001 A

MONITORING PERIOD	YEAR	MO	DAY		YEAR	MO	DAY
FROM	[illegible]	[illegible]	1	TO	[illegible]	[illegible]	[illegible]
	(20-21)	(22-23)	(24-25)		(26-27)	(28-29)	(30-31)

NOTE: Read Instructions before completing this form.

PARAMETER (32-37)		(3 Card Only) QUANTITY OR LOADING (46-53) AVERAGE	(54-61) MAXIMUM	UNITS	(4 Card Only) QUANTITY OR CONCENTRATION (38-45) MINIMUM	(46-53) AVERAGE	(54-61) MAXIMUM	UNITS	NO. EX (62-63)	FREQUENCY OF ANALYSIS (64-68)	SAMPLE TYPE (69-70)
[illegible]	SAMPLE MEASUREMENT	1.478	1.701	[illegible]	******	40.3	102	[illegible]	0	1/7	C
	PERMIT REQUIREMENT	70 MO AVG	140 DAILY MX	[illegible]	******	240 MO AVG	480 DAILY MX	[illegible]		WEEKLY	COMP24
[illegible]	SAMPLE MEASUREMENT	******	******		7.7	******	8.3	[illegible]	0	2/7	G
	PERMIT REQUIREMENT	******	******	******	5.5 MINIMUM	******	9.5 MAXIMUM	SU		TWICE/WEEK	GRAB
[illegible]	SAMPLE MEASUREMENT	24.58	60.64	[illegible]	******	212	488	[illegible]	0	1/7	C
	PERMIT REQUIREMENT	88 MO AVG	175 DAILY MX	[illegible]	******	300 MO AVG	600 DAILY MX	MG/L		WEEKLY	COMP24
[illegible]	SAMPLE MEASUREMENT	0	0	[illegible]	******	0	0	[illegible]	0	1/7	G
	PERMIT REQUIREMENT	REPORT MO AVG	29.2 DAILY MX	KG/DAY	******	REPORT MO AVG	100 DAILY MX	MG/L		WEEKLY	GRAB
[illegible]	SAMPLE MEASUREMENT	0.0063	0.0102	[illegible]	******	0.052	0.066	[illegible]	0	1/7	G
	PERMIT REQUIREMENT	.053 MO AVG	.102 DAILY MX	KG/DAY	******	.18 MO AVG	.36 DAILY MX	MG/L		WEEKLY	GRAB
[illegible]	SAMPLE MEASUREMENT	0	0	[illegible]	******	0	0	[illegible]	0	1/7	G
	PERMIT REQUIREMENT	.88 MO AVG	1.75 DAILY MX	KG/DAY	******	3 MO AVG	6 DAILY MX	MG/L		WEEKLY	GRAB
[illegible]	SAMPLE MEASUREMENT	0.015169	0.0236	[illegible]	******	******	******		0	Daily	Contin.
	PERMIT REQUIREMENT	REPORT MO AVG	0.035 DAILY MX	[illegible]	******	******	******	******		DAILY	CONTIN

NAME/TITLE PRINCIPAL EXECUTIVE OFFICER		SIGNATURE OF PRINCIPAL EXECUTIVE OFFICER OR AUTHORIZED AGENT	TELEPHONE		DATE		
Steve Joy Assistant plant mgr.	I CERTIFY UNDER PENALTY OF LAW THAT I HAVE PERSONALLY EXAMINED AND AM FAMILIAR WITH THE INFORMATION SUBMITTED HEREIN; AND BASED ON MY INQUIRY OF THOSE INDIVIDUALS IMMEDIATELY RESPONSIBLE FOR OBTAINING THE INFORMATION, I BELIEVE THE SUBMITTED INFORMATION IS TRUE, ACCURATE AND COMPLETE. I AM AWARE THAT THERE ARE SIGNIFICANT PENALTIES FOR SUBMITTING FALSE INFORMATION, INCLUDING THE POSSIBILITY OF FINE AND IMPRISONMENT. SEE 18 U.S.C. § 1001 AND 33 U.S.C. § 1319. (Penalties under these statutes may include fines up to $10,000 and or maximum imprisonment of between 6 months and 5 years.)	Steve Joy	662	226-4584	00	10	13
TYPED OR PRINTED			AREA CODE	NUMBER	YEAR	MO	DAY

COMMENTS AND EXPLANATION OF ANY VIOLATIONS (Reference all attachments here)

PERMITTEE NAME/ADDRESS (Include Facility Name/Location if Different)

NAME

ADDRESS

FACILITY LOCATION

Grenada Co.

NATIONAL POLLUTANT DISCHARGE ELIMINATION SYSTEM (NPDES)
DISCHARGE MONITORING REPORT (DMR)

Melissa

Form Approved.
OMB No. 2040-0004
Approval expires 05-31-98

RECEIVED
SEP 18 2000
Dept. of Environmental Quality
Office of Pollution Control

SEP 22 2000

PERMIT NUMBER (2-16)	DISCHARGE NUMBER (17-19)
	001

MONITORING PERIOD	YEAR	MO	DAY		YEAR	MO	DAY
FROM				TO			
	(20-21)	(22-23)	(24-25)		(26-27)	(28-29)	(30-31)

NOTE: Read Instructions before completing this form.

PARAMETER (32-37)		(3 Card Only) QUANTITY OR LOADING (46-53) AVERAGE	(54-61) MAXIMUM	UNITS	(4 Card Only) QUANTITY OR CONCENTRATION (38-45) MINIMUM	(46-53) AVERAGE	(54-61) MAXIMUM	UNITS	NO. EX (62-63)	FREQUENCY OF ANALYSIS (64-68)	SAMPLE TYPE (69-70)
FLOW, IN CONDUIT OR THRU TREATMENT PLANT (EFFLUENT GROSS VALUE)	SAMPLE MEASUREMENT	0.494	1.412		******	4.14	7.80		0	1/7	C
	PERMIT REQUIREMENT	70 MO AVG	140 DAILY MX	LBS/DY	******	240 MO AVG	480 DAILY MX	MG/L		WEEKLY	COMPZ
PH (EFFLUENT GROSS VALUE)	SAMPLE MEASUREMENT	******	******		7.10	******	7.97		0	2/7	G
	PERMIT REQUIREMENT	******	******	****	5.5 MINIMUM	******	9.5 MAXIMUM	SU		TWICE/WEEK	GRAB
SOLIDS, TOTAL SUSPENDED (EFFLUENT GROSS VALUE)	SAMPLE MEASUREMENT	8.754 55 am	37.824 209 am		******	55	209		0	1/7	C
	PERMIT REQUIREMENT	88 MO AVG	175 DAILY MX	LBS/DY	******	300 MO AVG	600 DAILY MX	MG/L		WEEKLY	COMPZ
OIL & GREASE (FREON EXTRACTION METHOD) (EFFLUENT GROSS VALUE)	SAMPLE MEASUREMENT	0	0		******	0	0		0	1/7	G
	PERMIT REQUIREMENT	REPORT MO AVG	29.2 DAILY MX	LBS/DAY	******	REPORT MO AVG	100 DAILY MX	MG/L		WEEKLY	GRAB
PENTACHLOROPHENOL (EFFLUENT GROSS VALUE)	SAMPLE MEASUREMENT	0.0223	0.1114 *		******	0.123	0.616 *		2	1/7	G
	PERMIT REQUIREMENT	.053 MO AVG	.102 DAILY MX	LBS/DAY	******	.18 MO AVG	.36 DAILY MX	MG/L		WEEKLY	GRAB
[illegible] (EFFLUENT GROSS VALUE)	SAMPLE MEASUREMENT	0	0		******	0	0		0	1/7	G
	PERMIT REQUIREMENT	.88 MO AVG	1.75 DAILY MX	LBS/DAY	******	3 MO AVG	6 DAILY MX	MG/L		WEEKLY	GRAB
FLOW, IN CONDUIT OR THRU TREATMENT PLANT (EFFLUENT GROSS VALUE)	SAMPLE MEASUREMENT	0.01827	0.0311		******	******	******			Daily	Contin
	PERMIT REQUIREMENT	REPORT MO AVG	0.035 DAILY MX	MGD	******	******	******	****		DAILY	CONTIN

NAME/TITLE PRINCIPAL EXECUTIVE OFFICER		TELEPHONE		DATE		
Thomas L. Henderson / Plant Manager		662	226-4584	00	9	13
TYPED OR PRINTED		AREA CODE	NUMBER	YEAR	MO	DAY

I CERTIFY UNDER PENALTY OF LAW THAT I HAVE PERSONALLY EXAMINED AND AM FAMILIAR WITH THE INFORMATION SUBMITTED HEREIN; AND BASED ON MY INQUIRY OF THOSE INDIVIDUALS IMMEDIATELY RESPONSIBLE FOR OBTAINING THE INFORMATION, I BELIEVE THE SUBMITTED INFORMATION IS TRUE, ACCURATE AND COMPLETE. I AM AWARE THAT THERE ARE SIGNIFICANT PENALTIES FOR SUBMITTING FALSE INFORMATION, INCLUDING THE POSSIBILITY OF FINE AND IMPRISONMENT. SEE 18 U.S.C. § 1001 AND 33 U.S.C. § 1319. *(Penalties under these statutes may include fines up to $10,000 and or maximum imprisonment of between 6 months and 5 years.)*

Thomas L. Henderson

SIGNATURE OF PRINCIPAL EXECUTIVE OFFICER OR AUTHORIZED AGENT

COMMENTS AND EXPLANATION OF ANY VIOLATIONS *(Reference all attachments here)*

* See attachments for explanation

PERMITTEE NAME/ADDRESS *(Include Facility Name/Location if Different)*

NAME [illegible]

ADDRESS [illegible]

FACILITY LOCATION

ATTN: THOMAS L HENDERSON

Grenda

NATIONAL POLLUTANT DISCHARGE ELIMINATION SYSTEM *(NPDES)*
DISCHARGE MONITORING REPORT *(DMR)*

Melissa

Form Approved.
OMB No. 2040-0004
Approval expires 05-31-98

AUG 2 2 2000

PERMIT NUMBER *(2-16)*: [illegible]

DISCHARGE NUMBER *(17-19)*: 001 A

MONITORING PERIOD	YEAR	MO	DAY		YEAR	MO	DAY
FROM	[illegible]	[illegible]	[illegible]	TO	[illegible]	[illegible]	[illegible]
	(20-21)	(22-23)	(24-25)		(26-27)	(28-29)	(30-31)

TOTAL FACILITY DISCHARGE

*** [illegible] ***

NOTE: Read Instructions before completing this form.

PARAMETER (32-37)		(3 Card Only) QUANTITY OR LOADING (46-53) AVERAGE	(54-61) MAXIMUM	UNITS	(4 Card Only) QUANTITY OR CONCENTRATION (38-45) MINIMUM	(46-53) AVERAGE	(54-61) MAXIMUM	UNITS	NO. EX (62-63)	FREQUENCY OF ANALYSIS (64-68)	SAMPLE TYPE (69-70)
BOD, 5-DAY (20 DEG. C)	SAMPLE MEASUREMENT	0.499	0.921	[illegible]	******	7.86	13.5	[illegible]	0	1/7	C
OUTFALL 1 EFFLUENT GROSS VALUE	PERMIT REQUIREMENT	70 MO AVG	140 DAILY MX	LBS/DY	******	240 MO AVG	480 DAILY MX	MG/L		WEEKLY	COMP24
[illegible]	SAMPLE MEASUREMENT	******	******		7.62	******	8.9	[illegible]	0	2/7	G
OUTFALL 2 EFFLUENT GROSS VALUE	PERMIT REQUIREMENT	******	******	*****	5.5 MINIMUM	******	9.5 MAXIMUM	SU		TWICE/WEEK	GRAB
SOLIDS, TOTAL SUSPENDED OUTFALL 2 EFFLUENT GROSS VALUE	SAMPLE MEASUREMENT	3.162	7.546	[illegible]	******	85	312	[illegible]	0	1/7	C
	PERMIT REQUIREMENT	88 MO AVG	175 DAILY MX	LBS/DY	******	300 MO AVG	600 DAILY MX	MG/L		WEEKLY	COMP24
OIL & GREASE (FREON EXTRACTION) OUTFALL 2 EFFLUENT GROSS VALUE	SAMPLE MEASUREMENT	0	0	[illegible]	******	0	0	[illegible]	0	1/7	G
	PERMIT REQUIREMENT	REPORT MO AVG	29.2 DAILY MX	KG/DAY	******	REPORT MO AVG	100 DAILY MX	MG/L		WEEKLY	GRAB
PENTACHLOROPHENOL OUTFALL 2 EFFLUENT GROSS VALUE	SAMPLE MEASUREMENT	0	0	[illegible]	******	0	0	[illegible]	0	1/7	G
	PERMIT REQUIREMENT	.053 MO AVG	.102 DAILY MX	KG/DAY	******	.18 MO AVG	.36 DAILY MX	MG/L		WEEKLY	GRAB
[illegible] OUTFALL 2 EFFLUENT GROSS VALUE	SAMPLE MEASUREMENT	0	0	[illegible]	******	0	0	[illegible]	0	1/7	G
	PERMIT REQUIREMENT	.88 MO AVG	1.75 DAILY MX	KG/DAY	******	3 MO AVG	6 DAILY MX	MG/L		WEEKLY	GRAB
SOLIDS, TOTAL SUSPENDED THIS TREATMENT PLANT OUTFALL 2 EFFLUENT GROSS VALUE	SAMPLE MEASUREMENT	0.007448	0.0188	[illegible]	******	******	******		0	Daily	Contin.
	PERMIT REQUIREMENT	REPORT MO AVG	0.035 DAILY MX	MGD	******	******	******	*****		DAILY	CONTIN

NAME/TITLE PRINCIPAL EXECUTIVE OFFICER

Thomas L. Henderson / Plant Manager

Thomas L. Henderson / Manager

TYPED OR PRINTED

I CERTIFY UNDER PENALTY OF LAW THAT I HAVE PERSONALLY EXAMINED AND AM FAMILIAR WITH THE INFORMATION SUBMITTED HEREIN; AND BASED ON MY INQUIRY OF THOSE INDIVIDUALS IMMEDIATELY RESPONSIBLE FOR OBTAINING THE INFORMATION, I BELIEVE THE SUBMITTED INFORMATION IS TRUE, ACCURATE AND COMPLETE. I AM AWARE THAT THERE ARE SIGNIFICANT PENALTIES FOR SUBMITTING FALSE INFORMATION, INCLUDING THE POSSIBILITY OF FINE AND IMPRISONMENT. SEE 18 U.S.C. § 1001 AND 33 U.S.C. § 1319. *(Penalties under these statutes may include fines up to $10,000 and or maximum imprisonment of between 6 months and 5 years.)*

Thomas L Henderson

SIGNATURE OF PRINCIPAL EXECUTIVE OFFICER OR AUTHORIZED AGENT

TELEPHONE		DATE		
662 (AREA CODE)	226-4584 (NUMBER)	00 (YEAR)	8 (MO)	16 (DAY)

COMMENTS AND EXPLANATION OF ANY VIOLATIONS *(Reference all attachments here)*

PERMITTEE NAME/ADDRESS *(Include Facility Name/Location if Different)*
NAME
ADDRESS
FACILITY
LOCATION

NATIONAL POLLUTANT DISCHARGE ELIMINATION SYSTEM *(NPDES)*
DISCHARGE MONITORING REPORT *(DMR)*
(2-16) (17-19)

PERMIT NUMBER
DISCHARGE NUMBER

Form Approved.
OMB No. 2040-0004
Approval expires 05-31-98

MONITORING PERIOD	YEAR	MO	DAY		YEAR	MO	DAY
FROM			1	TO			31
	(20-21)	(22-23)	(24-25)		(26-27)	(28-29)	(30-31)

NOTE: Read Instructions before completing this form.

PARAMETER (32-37)		(3 Card Only) QUANTITY OR LOADING (46-53) AVERAGE	(54-61) MAXIMUM	UNITS	(4 Card Only) QUANTITY OR CONCENTRATION (38-45) MINIMUM	(46-53) AVERAGE	(54-61) MAXIMUM	UNITS	NO. EX (62-63)	FREQUENCY OF ANALYSIS (64-68)	SAMPLE TYPE (69-70)
	SAMPLE MEASUREMENT	1.385	3.423		******	12.06	34.20		0	1/7	C
	PERMIT REQUIREMENT	70 MO AVG	140 DAILY MX		******	240 MO AVG	480 DAILY MX			WEEKLY	COMPZ
	SAMPLE MEASUREMENT	******	******		7.31	******	8.00		0	2/7	G
	PERMIT REQUIREMENT	******	******	*****	5.5 MINIMUM	******	9.5 MAXIMUM			WICE/WEEK	GRAB
	SAMPLE MEASUREMENT	8.091	18.064		******	64	150		0	1/7	C
	PERMIT REQUIREMENT	88 MO AVG	175 DAILY MX		******	300 MO AVG	600 DAILY MX			WEEKLY	COMPZ
	SAMPLE MEASUREMENT	0.391	1.161		******	3.622	11.60		0	1/7	G
	PERMIT REQUIREMENT	REPORT MO AVG	29.2 DAILY MX		******	REPORT MO AVG	100 DAILY MX			WEEKLY	GRAB
	SAMPLE MEASUREMENT	0.0181	0.0675		******	0.117	0.355		0	1/7	G
	PERMIT REQUIREMENT	.053 MO AVG	.102 DAILY MX		******	.18 MO AVG	.36 DAILY MX			WEEKLY	GRAB
	SAMPLE MEASUREMENT	0.0016	0.008		******	0.016	0.08		0	1/7	G
	PERMIT REQUIREMENT	.88 MO AVG	1.75 DAILY MX		******	3 MO AVG	6 DAILY MX			WEEKLY	GRAB
	SAMPLE MEASUREMENT	0.015058	0.0298		******	******	******		0	Daily	Continuous
	PERMIT REQUIREMENT	REPORT MO AVG	0.035 DAILY MX		******	******	******			DAILY	CONTI

NAME/TITLE PRINCIPAL EXECUTIVE OFFICER
Steve Joy / Assistant Plant Manager
TYPED OR PRINTED

I CERTIFY UNDER PENALTY OF LAW THAT I HAVE PERSONALLY EXAMINED AND AM FAMILIAR WITH THE INFORMATION SUBMITTED HEREIN; AND BASED ON MY INQUIRY OF THOSE INDIVIDUALS IMMEDIATELY RESPONSIBLE FOR OBTAINING THE INFORMATION, I BELIEVE THE SUBMITTED INFORMATION IS TRUE, ACCURATE AND COMPLETE. I AM AWARE THAT THERE ARE SIGNIFICANT PENALTIES FOR SUBMITTING FALSE INFORMATION, INCLUDING THE POSSIBILITY OF FINE AND IMPRISONMENT. SEE 18 U.S.C. § 1001 AND 33 U.S.C. § 1319. *(Penalties under these statutes may include fines up to $10,000 and or maximum imprisonment of between 6 months and 5 years.)*

Steve Joy
SIGNATURE OF PRINCIPAL EXECUTIVE OFFICER OR AUTHORIZED AGENT

TELEPHONE		DATE		
AREA CODE	NUMBER	YEAR	MO	DAY
662	226-4584	00	4	28

COMMENTS AND EXPLANATION OF ANY VIOLATIONS *(Reference all attachments here)*

PERMITTEE NAME/ADDRESS (Include Facility Name/Location if Different)

NAME

ADDRESS

FACILITY LOCATION

NATIONAL POLLUTANT DISCHARGE ELIMINATION SYSTEM (NPDES)
DISCHARGE MONITORING REPORT (DMR)

Form Approved.
OMB No. 2040-0004
Approval expires 05-31-98

PERMIT NUMBER (2-16)	DISCHARGE NUMBER (17-19)

MONITORING PERIOD	YEAR	MO	DAY		YEAR	MO	DAY
FROM	(20-21)	(22-23)	(24-25)	TO	(28-27)	(28-29)	(30-31)

NOTE: Read Instructions before completing this form.

PARAMETER (32-37)		(3 Card Only) QUANTITY OR LOADING (46-53) AVERAGE	(54-61) MAXIMUM	UNITS	(4 Card Only) QUANTITY OR CONCENTRATION (38-45) MINIMUM	(46-53) AVERAGE	(54-61) MAXIMUM	UNITS	NO. EX (62-63)	FREQUENCY OF ANALYSIS (64-68)	SAMPLE TYPE (69-70)
	SAMPLE MEASUREMENT	3.53	6.09			35.76	44.40		0	1/7	C
	PERMIT REQUIREMENT	70 MO AVG	140 DAILY MX			240 MO AVG	480 DAILY MX			WEEKLY	COMP
	SAMPLE MEASUREMENT				7.25		8.05		0	2/7	G
	PERMIT REQUIREMENT				5.5 MINIMUM		9.5 MAXIMUM	SU		TWICE/WEEK	GRAB
	SAMPLE MEASUREMENT	16.06	35.12			150.60	242		0	1/7	C
	PERMIT REQUIREMENT	88 MO AVG	175 DAILY MX			300 MO AVG	600 DAILY MX			WEEKLY	COMP24
	SAMPLE MEASUREMENT	0.406	0.783			3.816	5.940		0	1/7	G
	PERMIT REQUIREMENT	REPORT MO AVG	29.2 DAILY MX			REPORT MO AVG	100 DAILY MX			WEEKLY	GRAB
	SAMPLE MEASUREMENT	0.0002	0.0014			0.0048	0.024		0	1/7	G
	PERMIT REQUIREMENT	.053 MO AVG	.102 DAILY MX			.18 MO AVG	.36 DAILY MX			WEEKLY	GRAB
	SAMPLE MEASUREMENT	0	0			0	0		0	1/7	G
	PERMIT REQUIREMENT	.88 MO AVG	1.75 DAILY MX			5 MO AVG	5 DAILY MX			WEEKLY	GRAB
	SAMPLE MEASUREMENT	0.013334 ~~133~~	0.0314						0	Daily	Cont.
	PERMIT REQUIREMENT	REPORT MO AVG	0.035 DAILY MX	MGD						DAILY	CONT

NAME/TITLE PRINCIPAL EXECUTIVE OFFICER			TELEPHONE	DATE		
Steve Joy Asst. plant mgr.	I CERTIFY UNDER PENALTY OF LAW THAT I HAVE PERSONALLY EXAMINED AND AM FAMILIAR WITH THE INFORMATION SUBMITTED HEREIN; AND BASED ON MY INQUIRY OF THOSE INDIVIDUALS IMMEDIATELY RESPONSIBLE FOR OBTAINING THE INFORMATION, I BELIEVE THE SUBMITTED INFORMATION IS TRUE, ACCURATE AND COMPLETE. I AM AWARE THAT THERE ARE SIGNIFICANT PENALTIES FOR SUBMITTING FALSE INFORMATION, INCLUDING THE POSSIBILITY OF FINE AND IMPRISONMENT. SEE 18 U.S.C. § 1001 AND 33 U.S.C. § 1319. (Penalties under these statutes may include fines up to $10,000 and or maximum imprisonment of between 6 months and 5 years.)	Steve Joy	602 227 1608	3	27	00
TYPED OR PRINTED		SIGNATURE OF PRINCIPAL EXECUTIVE OFFICER OR AUTHORIZED AGENT	AREA CODE	NUMBER	YEAR	MO	DAY

COMMENTS AND EXPLANATION OF ANY VIOLATIONS (Reference all attachments here)

PERMITTEE NAME/ADDRESS *(Include Facility Name/Location if Different)*

NAME [illegible]

ADDRESS [illegible]

FACILITY

LOCATION

ATTN: THOMAS L [illegible]

NATIONAL POLLUTANT DISCHARGE ELIMINATION SYSTEM *(NPDES)*
DISCHARGE MONITORING REPORT *(DMR)*

PERMIT NUMBER (2-16)	DISCHARGE NUMBER (17-19)
[illegible]	[illegible]

MONITORING PERIOD	YEAR	MO	DAY		YEAR	MO	DAY
FROM	[illegible]	[illegible]	[illegible]	TO	[illegible]	[illegible]	[illegible]
	(20-21)	(22-23)	(24-25)		(26-27)	(28-29)	(30-31)

Form Approved.
OMB No. 2040-0004
Approval expires 05-31-98

[illegible]
[illegible]
F - FINAL
TOTAL FACILITY DISCHARGE

*** [illegible] DISCHARGE [ ] ***

NOTE: Read Instructions before completing this form.

PARAMETER (32-37)		(3 Card Only) QUANTITY OR LOADING (46-53) AVERAGE	(54-61) MAXIMUM	UNITS	(4 Card Only) QUANTITY OR CONCENTRATION (38-45) MINIMUM	(46-53) AVERAGE	(54-61) MAXIMUM	UNITS	NO. EX (62-63)	FREQUENCY OF ANALYSIS (64-68)	SAMPLE TYPE (69-70)
[illegible]	SAMPLE MEASUREMENT	0	0	(25)	******	0	0	(19)	0	2/12	C
	PERMIT REQUIREMENT	REPORT ANNL AVG	0.131 ANNL MAX	LBS/DY	******	REPORT ANNL AVG	.45 ANNL MAX	MG/L		SEMI-ANNUAL	COMP24
[illegible]	SAMPLE MEASUREMENT	0	0	(26)	******	0	0	(19)	0	2/12	C
	PERMIT REQUIREMENT	REPORT ANNL AVG	1.168 ANNL MAX	LBS/DY	******	REPORT ANNL AVG	4.0 ANNL MAX	MG/L		SEMI-ANNUAL	COMP24
[illegible]	SAMPLE MEASUREMENT	0	0.001	(26)	******	0	0.01	(19)	0	2/12	C
	PERMIT REQUIREMENT	REPORT ANNL AVG	0.642 ANNL MAX	LBS/DY	******	REPORT ANNL AVG	2.2 ANNL MAX	MG/L		SEMI-ANNUAL	COMP24
	SAMPLE MEASUREMENT										
	PERMIT REQUIREMENT										
	SAMPLE MEASUREMENT										
	PERMIT REQUIREMENT										
	SAMPLE MEASUREMENT										
	PERMIT REQUIREMENT										
	SAMPLE MEASUREMENT										
	PERMIT REQUIREMENT										

NAME/TITLE PRINCIPAL EXECUTIVE OFFICER			TELEPHONE		DATE		
Steve Joy / Asst. Plant Manager	I CERTIFY UNDER PENALTY OF LAW THAT I HAVE PERSONALLY EXAMINED AND AM FAMILIAR WITH THE INFORMATION SUBMITTED HEREIN; AND BASED ON MY INQUIRY OF THOSE INDIVIDUALS IMMEDIATELY RESPONSIBLE FOR OBTAINING THE INFORMATION, I BELIEVE THE SUBMITTED INFORMATION IS TRUE, ACCURATE AND COMPLETE. I AM AWARE THAT THERE ARE SIGNIFICANT PENALTIES FOR SUBMITTING FALSE INFORMATION, INCLUDING THE POSSIBILITY OF FINE AND IMPRISONMENT. SEE 18 U.S.C. § 1001 AND 33 U.S.C. § 1319. *(Penalties under these statutes may include fines up to $10,000 and or maximum imprisonment of between 6 months and 5 years.)*	Steve Joy	662	226-4584	00	4	28
TYPED OR PRINTED		SIGNATURE OF PRINCIPAL EXECUTIVE OFFICER OR AUTHORIZED AGENT	AREA CODE	NUMBER	YEAR	MO	DAY

COMMENTS AND EXPLANATION OF ANY VIOLATIONS *(Reference all attachments here)*

PERMITTEE NAME/ADDRESS *(Include Facility Name/Location if Different)*

NAME

ADDRESS

FACILITY

LOCATION

NATIONAL POLLUTANT DISCHARGE ELIMINATION SYSTEM *(NPDES)*
DISCHARGE MONITORING REPORT *(DMR)*

(2-16) PERMIT NUMBER

(17-19) DISCHARGE NUMBER

MONITORING PERIOD	YEAR	MO	DAY		YEAR	MO	DAY
FROM				TO			
	(20-21)	(22-23)	(24-25)		(26-27)	(28-29)	(30-31)

Form Approved.
OMB No. 2040-0004
Approval expires 05-31-98

2 2000

NOTE: Read Instructions before completing this form.

PARAMETER (32-37)		(3 Card Only) QUANTITY OR LOADING (46-53) AVERAGE	(54-61) MAXIMUM	UNITS	(4 Card Only) QUANTITY OR CONCENTRATION (38-45) MINIMUM	(46-53) AVERAGE	(54-61) MAXIMUM	UNITS	NO. EX (62-63)	FREQUENCY OF ANALYSIS (64-68)	SAMPLE TYPE (69-70)
	SAMPLE MEASUREMENT	6.136	14.741		******	29.62	61.80		0	1/7	C
	PERMIT REQUIREMENT	70 MO AVG	140 DAILY MX		******	240 MO AVG	480 DAILY MX			WEEKLY	COMP24
	SAMPLE MEASUREMENT	******	******		7.49	******	7.99		0	2/7	G
	PERMIT REQUIREMENT	******	******		5.5 MINIMUM	******	9.5 MAXIMUM			TWICE/WEEK	GRAB
	SAMPLE MEASUREMENT	35.429	77.032		******	171	358		0	1/7	C
	PERMIT REQUIREMENT	88 MO AVG	175 DAILY MX		******	300 MO AVG	600 DAILY MX			WEEKLY	COMP24
	SAMPLE MEASUREMENT	2.046	3.506		******	10.24	14.70		0	1/7	G
	PERMIT REQUIREMENT	REPORT MO AVG	29.2 DAILY MX		******	REPORT MO AVG	100 DAILY MX			WEEKLY	GRAB
	SAMPLE MEASUREMENT	0	0		******	0	0		0	1/7	G
	PERMIT REQUIREMENT	.053 MO AVG	.102 DAILY MX		******	.18 MO AVG	.36 DAILY MX			WEEKLY	GRAB
	SAMPLE MEASUREMENT	0.00194 ~~0.01~~	0.00972		******	0.01	0.05		0	1/7	G
	PERMIT REQUIREMENT	.88 MO AVG	1.75 DAILY MX		******	3 MO AVG	6 DAILY MX			WEEKLY	GRAB
	SAMPLE MEASUREMENT	0.019516	0.0348		******	******	******		0	Daily	Contin
	PERMIT REQUIREMENT	REPORT MO AVG	0.035 DAILY MX		******	******	******			DAILY	CONTIN

NAME/TITLE PRINCIPAL EXECUTIVE OFFICER

Thomas L Henderson / Plant Manager

TYPED OR PRINTED

I CERTIFY UNDER PENALTY OF LAW THAT I HAVE PERSONALLY EXAMINED AND AM FAMILIAR WITH THE INFORMATION SUBMITTED HEREIN; AND BASED ON MY INQUIRY OF THOSE INDIVIDUALS IMMEDIATELY RESPONSIBLE FOR OBTAINING THE INFORMATION, I BELIEVE THE SUBMITTED INFORMATION IS TRUE, ACCURATE AND COMPLETE. I AM AWARE THAT THERE ARE SIGNIFICANT PENALTIES FOR SUBMITTING FALSE INFORMATION, INCLUDING THE POSSIBILITY OF FINE AND IMPRISONMENT. SEE 18 U.S.C. § 1001 AND 33 U.S.C. § 1319. *(Penalties under these statutes may include fines up to $10,000 and or maximum imprisonment of between 6 months and 5 years.)*

Thomas L Henderson

SIGNATURE OF PRINCIPAL EXECUTIVE OFFICER OR AUTHORIZED AGENT

TELEPHONE		DATE		
662 (AREA CODE)	226-4584 (NUMBER)	00 (YEAR)	02 (MO)	15 (DAY)

COMMENTS AND EXPLANATION OF ANY VIOLATIONS *(Reference all attachments here)*

PERMITTEE NAME/ADDRESS (Include Facility Name/ Location if Different)
NAME KOPPERS INDUSTRIES INC
ADDRESS P O BOX 160
TIE PLANT MS 38960

FACILITY
LOCATION
ATTN: THOMAS L HENDERSON

NATIONAL POLLUTANT DISCHARGE ELIMINATION SYSTEM (NPDES)
DISCHARGE MONITORING REPORT (DMR)

(2-16) MS0000300 — PERMIT NUMBER
(17-19) 001 A — DISCHARGE NUMBER

MINOR
(SUPER FUND)
F - FINAL
TOTAL FACILITY DISCHARGE

JAN 26 2000

TAT

Form Approved.
OMB No. 2040-0004
Approval expires 05-31-98

MONITORING PERIOD

	YEAR	MO	DAY		YEAR	MO	DAY
FROM	99	12	01	TO	99	12	31
	(20-21)	(22-23)	(24-25)		(26-27)	(28-29)	(30-31)

*** NO DISCHARGE |__| ***

NOTE: Read Instructions before completing this form.

PARAMETER (32-37)		(3 Card Only) QUANTITY OR LOADING (46-53) AVERAGE	(54-61) MAXIMUM	UNITS	(4 Card Only) QUANTITY OR CONCENTRATION (38-45) MINIMUM	(46-53) AVERAGE	(54-61) MAXIMUM	UNITS	NO. EX (62-63)	FREQUENCY OF ANALYSIS (64-68)	SAMPLE TYPE (69-70)
BOD, 5-DAY (20 DEG. C) 00310 1 0 0 EFFLUENT GROSS VALUE	SAMPLE MEASUREMENT	2.302	5.247	(26)	******	11.62	32.10	(19)	0	1/7	C
	PERMIT REQUIREMENT	10 MO AVG	140 DAILY MX	LBS/DY	******	240 MO AVG	540 DAILY MX	MG/L		WEEKLY	COMPOSITE
[illegible] 00400 1 0 0 EFFLUENT GROSS VALUE	SAMPLE MEASUREMENT	******	******		7.1	******	7.9	(12)	0	2/7	G
	PERMIT REQUIREMENT	******	******	**** ****	6.5 MINIMUM	******	9.0 MAXIMUM	SU		TWICE/WEEK	GRAB
SOLIDS, TOTAL SUSPENDED 00530 1 0 0 EFFLUENT GROSS VALUE	SAMPLE MEASUREMENT	21.10	37.79	(26)	******	119.6	249	(19)	0	1/7	C
	PERMIT REQUIREMENT	45 MO AVG	175 DAILY MX	LBS/DY	******	300 MO AVG	600 DAILY MX	MG/L		WEEKLY	COMPOSITE
OIL & GREASE (FREON EXTR.-IR METH) TOT. RC 00560 1 0 0 EFFLUENT GROSS VALUE	SAMPLE MEASUREMENT	0.427	0.964	(01)	******	2.372	5.9	(19)	0	1/7	G
	PERMIT REQUIREMENT	REPORT MO AVG	29.2 DAILY MX	KG/DAY	******	REPORT MO AVG	100 DAILY MX	MG/L		WEEKLY	GRAB
PENTACHLOROPHENOL 39032 1 0 0 EFFLUENT GROSS VALUE	SAMPLE MEASUREMENT	0	0	(01)	******	0	0	(19)	0	1/7	G
	PERMIT REQUIREMENT	.094 MO AVG	.187 DAILY MX	KG/DAY	******	.18 MO AVG	.36 DAILY MX	MG/L		WEEKLY	GRAB
PHENOLS [illegible] 00 1 0 0 EFFLUENT GROSS VALUE	SAMPLE MEASUREMENT	0.004	0.021	(01)	******	0.028	0.14	(19)	0	1/7	G
	PERMIT REQUIREMENT	.36 MO AVG	1.75 DAILY MX	KG/DAY	******	3 MO AVG	6 DAILY MX	MG/L		WEEKLY	GRAB
FLOW, IN CONDUIT OR THRU TREATMENT PLANT 50050 1 0 0 EFFLUENT GROSS VALUE	SAMPLE MEASUREMENT	0.020625	0.0343	(03)	******	******	******		0	Daily	Continuo
	PERMIT REQUIREMENT	REPORT MO AVG	0.[illegible] DAILY MX	MGD	******	******	******	**** ****		DAILY	CONTIN

NAME/TITLE PRINCIPAL EXECUTIVE OFFICER		TELEPHONE		DATE		
Steve Joy Assistant Plant mgr	I CERTIFY UNDER PENALTY OF LAW THAT I HAVE PERSONALLY EXAMINED AND AM FAMILIAR WITH THE INFORMATION SUBMITTED HEREIN; AND BASED ON MY INQUIRY OF THOSE INDIVIDUALS IMMEDIATELY RESPONSIBLE FOR OBTAINING THE INFORMATION, I BELIEVE THE SUBMITTED INFORMATION IS TRUE, ACCURATE AND COMPLETE. I AM AWARE THAT THERE ARE SIGNIFICANT PENALTIES FOR SUBMITTING FALSE INFORMATION, INCLUDING THE POSSIBILITY OF FINE AND IMPRISONMENT. SEE 18 U.S.C. § 1001 AND 33 U.S.C. § 1319. *(Penalties under these statutes may include fines up to $10,000 and or maximum imprisonment of between 6 months and 5 years.)*	Steve Joy	662 2271608	1	21	00
TYPED OR PRINTED		SIGNATURE OF PRINCIPAL EXECUTIVE OFFICER OR AUTHORIZED AGENT	AREA CODE	NUMBER	YEAR	MO	DAY

COMMENTS AND EXPLANATION OF ANY VIOLATIONS *(Reference all attachments here)*

PERMITTEE NAME/ADDRESS (Include Facility Name/Location if Different)

NAME KOPPERS INDUSTRIES INC

ADDRESS P O BOX 160
TIE PLANT MS 38960

Grenada Co.

NATIONAL POLLUTANT DISCHARGE ELIMINATION SYSTEM (NPDES)
DISCHARGE MONITORING REPORT (DMR)
(2-16)

Grenada

PERMIT NUMBER	DISCHARGE NUMBER (17-19)
MS0000500	001 A

Pretreatment
MINOR
(SUBR NO)
F - FINAL
TOTAL FACILITY DISCHARGE

Form Approved.
OMB No. 2040-0004
Approval expires 05-31-98

FACILITY

LOCATION

ATTN: THOMAS L HENDERSON

MONITORING PERIOD	YEAR	MO	DAY		YEAR	MO	DAY
FROM	99	11	01	TO	99	11	30
	(20-21)	(22-23)	(24-25)		(26-27)	(28-29)	(30-31)

*** NO DISCHARGE [ ] ***

TAT

RT

NOTE: Read instructions before completing this form.

PARAMETER (32-37)		(3 Card Only) (46-53) QUANTITY OR LOADING (54-61) AVERAGE	MAXIMUM	UNITS	(4 Card Only) (38-45) QUANTITY OR CONCENTRATION (46-53) MINIMUM	AVERAGE	(54-61) MAXIMUM	UNITS	NO. EX (62-63)	FREQUENCY OF ANALYSIS (64-68)	SAMPLE TYPE (69-70)
BOD, 5-DAY (20 DEG. C) 00310 1 0 0 EFFLUENT GROSS VALUE	SAMPLE MEASUREMENT	0.402	0.884	(26)	******	2.68	6.20	(19)	0	1/7	C
	PERMIT REQUIREMENT	10 MO AVG	140 DAILY MX	LBS/DY	******	240 MO AVG	480 DAILY MX	MG/L		WEEKLY	CMP24
[redacted] 00400 1 0 0 EFFLUENT GROSS VALUE	SAMPLE MEASUREMENT	******	******		7.5	******	8.1	(12)	0	2/7	G
	PERMIT REQUIREMENT	******	******	**** ****	6.5 MINIMUM	******	9.5 MAXIMUM	SU		PHCS/GRAB	
SOLIDS, TOTAL SUSPENDED 00530 1 0 0 EFFLUENT GROSS VALUE	SAMPLE MEASUREMENT	8.36	12.40	(26)	******	61.4	93	(19)	0	1/7	C
	PERMIT REQUIREMENT	19 MO AVG	175 DAILY MX	LBS/DY	******	300 MO AVG	500 DAILY MX	MG/L		WEEKLY	CMP24
OIL & GREASE (FREON EXTR.-IR METH) TOT.RE 00560 1 0 0 EFFLUENT GROSS VALUE	SAMPLE MEASUREMENT	0.408	1.358	(01)	******	2.74	9.20	(19)	0	1/7	G
	PERMIT REQUIREMENT	REPORT MO AVG	29.2 DAILY MX	KG/DAY	******	REPORT MO AVG	100 DAILY MX	MG/L		WEEKLY	GRAB
PENTACHLOROPHENOL 39032 1 0 0 EFFLUENT GROSS VALUE	SAMPLE MEASUREMENT	0.0017	0.0085	(01)	******	0.012	0.06	(19)	0	1/7	G
	PERMIT REQUIREMENT	.053 MO AVG	.102 DAILY MX	KG/DAY	******	.13 MO AVG	.36 DAILY MX	MG/L		WEEKLY	GRAB
[redacted]OLS 46000 1 0 0 EFFLUENT GROSS VALUE	SAMPLE MEASUREMENT	0.0032	0.0163	(01)	******	0.018	0.09	(19)	0	1/7	G
	PERMIT REQUIREMENT	.35 MO AVG	1.75 DAILY MX	KG/DAY	******	3 MO AVG	5 DAILY MX	MG/L		WEEKLY	GRAB
FLOW, IN CONDUIT OR THRU TREATMENT PLANT 50050 1 0 0 EFFLUENT GROSS VALUE	SAMPLE MEASUREMENT	0.014086	0.025	(03)	******	******	******		0	Daily	Cont.
	PERMIT REQUIREMENT	REPORT MO AVG	0.035 DAILY MX	MGD	******	******	******	**** ****		DAILY	CONTIN

NAME/TITLE PRINCIPAL EXECUTIVE OFFICER

Anthony A. Mayhan
TYPED OR PRINTED

I CERTIFY UNDER PENALTY OF LAW THAT I HAVE PERSONALLY EXAMINED AND AM FAMILIAR WITH THE INFORMATION SUBMITTED HEREIN; AND BASED ON MY INQUIRY OF THOSE INDIVIDUALS IMMEDIATELY RESPONSIBLE FOR OBTAINING THE INFORMATION, I BELIEVE THE SUBMITTED INFORMATION IS TRUE, ACCURATE AND COMPLETE. I AM AWARE THAT THERE ARE SIGNIFICANT PENALTIES FOR SUBMITTING FALSE INFORMATION, INCLUDING THE POSSIBILITY OF FINE AND IMPRISONMENT. SEE 18 U.S.C. § 1001 AND 33 U.S.C. § 1319. *(Penalties under these statutes may include fines up to $10,000 and or maximum imprisonment of between 6 months and 5 years.)*

Anthony A. Mayhan
SIGNATURE OF PRINCIPAL EXECUTIVE OFFICER OR AUTHORIZED AGENT

TELEPHONE AREA CODE	NUMBER	DATE YEAR	MO	DAY
662	226-4584	99	12	28

RECEIVED
DEC 30 1999
DEQ-OPC

COMMENTS AND EXPLANATION OF ANY VIOLATIONS *(Reference all attachments here)*

EPA Form 3320-1 (08-95) Previous editions may be used. (REPLACES EPA FORM T-40 WHICH MAY NOT BE USED.)

PAGE OF

PERMITTEE NAME/ADDRESS (Include Facility Name/ Location if Different)

NAME KOPPERS INDUSTRIES INC

ADDRESS P O BOX 150
TIE PLANT MS 38960

FACILITY

LOCATION

ATTN: THOMAS L HENDERSON

NATIONAL POLLUTANT DISCHARGE ELIMINATION SYSTEM (NPDES)
DISCHARGE MONITORING REPORT (DMR)

Form Approved.
OMB No. 2040-0004
Approval expires 05-31-98

PERMIT NUMBER (2-16)	DISCHARGE NUMBER (17-19)
MS0000300	001 A

MINOR
(SUBR 40)
F - FINAL
TOTAL FACILITY DISCHARGE

NOV 30 1999

TAT

MONITORING PERIOD	YEAR	MO	DAY		YEAR	MO	DAY
FROM	99	10	01	TO	99	10	31
	(20-21)	(22-23)	(24-25)		(26-27)	(28-29)	(30-31)

*** NO DISCHARGE |__| ***

NOTE: Read instructions before completing this form.

PARAMETER (32-37)		QUANTITY OR LOADING (3 Card Only) AVERAGE (46-53)	MAXIMUM (54-61)	UNITS	QUANTITY OR CONCENTRATION (4 Card Only) MINIMUM (38-45)	AVERAGE (46-53)	MAXIMUM (54-61)	UNITS	NO. EX (62-63)	FREQUENCY OF ANALYSIS (64-68)	SAMPLE TYPE (69-70)
BOD, 5-DAY (20 DEG. C) 00310 1 0 0 EFFLUENT GROSS VALU	SAMPLE MEASUREMENT	11.172	54.944	(26)	******	56.98	270	(19)	0	1/7	C
	PERMIT REQUIREMENT	70 MO AVG	140 DAILY MX	LBS/DY	******	240 MO AVG	480 DAILY MX	MG/L		WEEKLY	LOGP24
PH 00400 1 0 0 EFFLUENT GROSS VALU	SAMPLE MEASUREMENT	******	******		7.5	******	8.1	(12)	0	2/7	G
	PERMIT REQUIREMENT	******	******	**** ****	6.5 MINIMUM	******	9.0 MAXIMUM	SU		WEEK/GRAB	
SOLIDS, TOTAL SUSPENDED 00530 1 0 0 EFFLUENT GROSS VALU	SAMPLE MEASUREMENT	4.226	11.192	(26)	******	53.40	151	(19)	0	1/7	C
	PERMIT REQUIREMENT	38 MO AVG	175 DAILY MX	LBS/DY	******	300 MO AVG	600 DAILY MX	MG/L		WEEKLY	LOGP24
OIL & GREASE (FREON EXTR.-IR METH) TOT.RE 00560 1 0 0 EFFLUENT GROSS VALU	SAMPLE MEASUREMENT	0.202	0.466	(01)	******	1.706	2.80	(19)	0	1/7	G
	PERMIT REQUIREMENT	REPORT MO AVG	29.2 DAILY MX	KG/DAY	******	REPORT MO AVG	100 DAILY MX	MG/L		WEEKLY	GRAB
PENTACHLOROPHENOL 39032 1 0 0 EFFLUENT GROSS VALU	SAMPLE MEASUREMENT	0	0	(01)	******	0	0	(19)	0	1/7	G
	PERMIT REQUIREMENT	.053 MO AVG	.102 DAILY MX	KG/DAY	******	.18 MO AVG	.36 DAILY MX	MG/L		WEEKLY	GRAB
PAH'S 40000 1 0 0 EFFLUENT GROSS VALU	SAMPLE MEASUREMENT	0.00132	0.00495	(01)	******	0.0136	0.06	(19)	0	1/7	G
	PERMIT REQUIREMENT	.98 MO AVG	1.75 DAILY MX	KG/DAY	******	3 MO AVG	6 DAILY MX	MG/L		WEEKLY	GRAB
FLOW, IN CONDUIT OR THRU TREATMENT PLANT 50050 1 0 0 EFFLUENT GROSS VALU	SAMPLE MEASUREMENT	0.016 19	0.027	(03)	******	******	******		0	Daily	Contin
	PERMIT REQUIREMENT	REPORT MO AVG	0.035 DAILY MX	MGD	******	******	******	**** ****		DAILY	CONTIN

NAME/TITLE PRINCIPAL EXECUTIVE OFFICER			
JAMES HATCH ASST. PLANT MANAGER	I CERTIFY UNDER PENALTY OF LAW THAT I HAVE PERSONALLY EXAMINED AND AM FAMILIAR WITH THE INFORMATION SUBMITTED HEREIN; AND BASED ON MY INQUIRY OF THOSE INDIVIDUALS IMMEDIATELY RESPONSIBLE FOR OBTAINING THE INFORMATION, I BELIEVE THE SUBMITTED INFORMATION IS TRUE, ACCURATE AND COMPLETE. I AM AWARE THAT THERE ARE SIGNIFICANT PENALTIES FOR SUBMITTING FALSE INFORMATION, INCLUDING THE POSSIBILITY OF FINE AND IMPRISONMENT. SEE 18 U.S.C. § 1001 AND 33 U.S.C. § 1319. (Penalties under these statutes may include fines up to $10,000 and or maximum imprisonment of between 6 months and 5 years.)	James Hatch	TELEPHONE: 662 226-4589	DATE: 99 11 23
Thomas L. Henderson		SIGNATURE OF PRINCIPAL EXECUTIVE OFFICER OR AUTHORIZED AGENT	AREA CODE / NUMBER / YEAR / MO / DAY
TYPED OR PRINTED			

COMMENTS AND EXPLANATION OF ANY VIOLATIONS (Reference all attachments here)

PERMITTEE NAME/ADDRESS (Include Facility Name/Location if Different)

NAME KOPPERS INDUSTRIES INC

ADDRESS P O BOX 160

TIE PLANT MS 38960

FACILITY

LOCATION

ATTN: THOMAS L HENDERSON

NATIONAL POLLUTANT DISCHARGE ELIMINATION SYSTEM (NPDES)

DISCHARGE MONITORING REPORT (DMR)

(2-16) MS[illegible] 300 — PERMIT NUMBER

(17-19) 001 Y — DISCHARGE NUMBER

MINOR

(SUBR NO)

F - FINAL

TOTAL FACILITY DISCHARGE

TRT

Form Approved.
OMB No. 2040-0004
Approval expires 05-31-98

MONITORING PERIOD	YEAR	MO	DAY		YEAR	MO	DAY
FROM	99	07	01	TO	99	12	31
	(20-21)	(22-23)	(24-25)		(26-27)	(28-29)	(30-31)

*** NO DISCHARGE [ ] ***

NOTE: Read Instructions before completing this form.

PARAMETER (32-37)		(3 Card Only) QUANTITY OR LOADING (46-53) AVERAGE	(54-61) MAXIMUM	UNITS	(4 Card Only) QUANTITY OR CONCENTRATION (38-45) MINIMUM	(46-53) AVERAGE	(54-61) MAXIMUM	UNITS	NO. EX (62-63)	FREQUENCY OF ANALYSIS (64-68)	SAMPLE TYPE (69-70)
ARSENIC, TOTAL RECOVERABLE 00978 1 0 0 EFFLUENT GROSS VALUE	SAMPLE MEASUREMENT	0	0	(26)	******	0	0	(19)	0	6/12	C
	PERMIT REQUIREMENT	REPORT ANNL AVG	0.131 ANNL MAX	LBS/DY	******	REPORT ANNL AVG	.43 ANNL MAX	MG/L		SEMI-ANNUAL	COMP24
C[illegible]/13, TOTAL RECOVERABLE 01118 1 0 0 EFFLUENT GROSS VALUE	SAMPLE MEASUREMENT	0	0	(26)	******	0	0	(19)	0	6/12	C
	PERMIT REQUIREMENT	REPORT ANNL AVG	1.158 ANNL MAX	LBS/DY	******	REPORT ANNL AVG	4.0 ANNL MAX	MG/L		SEMI-ANNUAL	COMP24
COPPER TOTAL RECOVERABLE 01119 1 0 0 EFFLUENT GROSS VALUE	SAMPLE MEASUREMENT	0.00101	0.00101	(26)	******	0.005	0.005	(19)	0	6/12	C
	PERMIT REQUIREMENT	REPORT ANNL AVG	0.642 ANNL MAX	LBS/DY	******	REPORT ANNL AVG	2.2 ANNL MAX	MG/L		SEMI-ANNUAL	COMP24
	SAMPLE MEASUREMENT										
	PERMIT REQUIREMENT										
	SAMPLE MEASUREMENT										
	PERMIT REQUIREMENT										
	SAMPLE MEASUREMENT										
	PERMIT REQUIREMENT										
	SAMPLE MEASUREMENT										
	PERMIT REQUIREMENT										

NAME/TITLE PRINCIPAL EXECUTIVE OFFICER

JAMES HATCH ASST. PLANT MANAGER

Thomas L. Henderson

TYPED OR PRINTED

I CERTIFY UNDER PENALTY OF LAW THAT I HAVE PERSONALLY EXAMINED AND AM FAMILIAR WITH THE INFORMATION SUBMITTED HEREIN; AND BASED ON MY INQUIRY OF THOSE INDIVIDUALS IMMEDIATELY RESPONSIBLE FOR OBTAINING THE INFORMATION, I BELIEVE THE SUBMITTED INFORMATION IS TRUE, ACCURATE AND COMPLETE. I AM AWARE THAT THERE ARE SIGNIFICANT PENALTIES FOR SUBMITTING FALSE INFORMATION, INCLUDING THE POSSIBILITY OF FINE AND IMPRISONMENT. SEE 18 U.S.C. § 1001 AND 33 U.S.C. § 1319. *(Penalties under these statutes may include fines up to $10,000 and or maximum imprisonment of between 6 months and 5 years.)*

James Hatch

SIGNATURE OF PRINCIPAL EXECUTIVE OFFICER OR AUTHORIZED AGENT

TELEPHONE		DATE		
662	226-4584	99	11	23
AREA CODE	NUMBER	YEAR	MO	DAY

COMMENTS AND EXPLANATION OF ANY VIOLATIONS *(Reference all attachments here)*

EPA Form 3320-1 (08-95) Previous editions may be used. (REPLACES EPA FORM T-40 WHICH MAY NOT BE USED.)

00193/990119-1525

PAGE OF

PERMITTEE NAME/ADDRESS (Include Facility Name/Location if Different)

NAME KOPPERS INDUSTRIES INC

ADDRESS P O BOX 160
TIE PLANT MS 38960

FACILITY

LOCATION

ATTN: THOMAS L HENDERSON

NATIONAL POLLUTANT DISCHARGE ELIMINATION SYSTEM (NPDES)
DISCHARGE MONITORING REPORT (DMR)

(2-16) MS0020300 — PERMIT NUMBER

(17-19) 001 A — DISCHARGE NUMBER

Kurt

MINOR
(SUBR NO)
F - FINAL
TOTAL FACILITY DISCHARGE

TAT

Form Approved.
OMB No. 2040-0004
Approval expires 05-31-98

MONITORING PERIOD	YEAR	MO	DAY		YEAR	MO	DAY
FROM	99	09	01	TO	99	09	30
	(20-21)	(22-23)	(24-25)		(26-27)	(28-29)	(30-31)

*** NO DISCHARGE |__| ***

NOTE: Read instructions before completing this form.

PARAMETER (32-37)		(3 Card Only) QUANTITY OR LOADING (46-53) AVERAGE	(54-61) MAXIMUM	UNITS	(4 Card Only) QUANTITY OR CONCENTRATION (38-45) MINIMUM	(46-53) AVERAGE	(54-61) MAXIMUM	UNITS	NO. EX (62-63)	FREQUENCY OF ANALYSIS (64-68)	SAMPLE TYPE (69-70)
BOD, 5-DAY (20 DEG. C) 00310 1 0 0 EFFLUENT GROSS VALUE	SAMPLE MEASUREMENT	0.057	0.287	(26)	******	0.450	2.25	(19)	0	1/7	C
	PERMIT REQUIREMENT	70 MO AVG	140 DAILY MX	LBS/DY	******	240 MO AVG	480 DAILY MX	MG/L		WEEKLY	COMP24
PH 00400 1 0 0 EFFLUENT GROSS VALUE	SAMPLE MEASUREMENT	******	******		7.3	******	7.9	(12)	0	2/7	G
	PERMIT REQUIREMENT	******	******	**** ****	6.5 MINIMUM	******	9.0 MAXIMUM	SU		TWICE/WEEK	GRAB
SOLIDS, TOTAL SUSPENDED 00530 1 0 0 EFFLUENT GROSS VALUE	SAMPLE MEASUREMENT	1.362	3.062	(26)	******	13.8	39.0	(19)	0	1/7	C
	PERMIT REQUIREMENT	35 MO AVG	175 DAILY MX	LBS/DY	******	300 MO AVG	600 DAILY MX	MG/L		WEEKLY	COMP24
OIL & GREASE (FREON EXTR.-IR METH) TOT. RC 00560 1 0 0 EFFLUENT GROSS VALUE	SAMPLE MEASUREMENT	0.100	0.277	(51)	******	0.52	1.37	(19)	0	1/7	G
	PERMIT REQUIREMENT	REPORT MO AVG	29.2 DAILY MX	KG/DAY	******	REPORT MO AVG	100 DAILY MX	MG/L		WEEKLY	GRAB
PENTACHLOROPHENOL 39032 1 0 0 EFFLUENT GROSS VALUE	SAMPLE MEASUREMENT	0	0	(51)	******	0	0	(19)	0	1/7	G
	PERMIT REQUIREMENT	.053 MO AVG	.102 DAILY MX	KG/DAY	******	.16 MO AVG	.35 DAILY MX	MG/L		WEEKLY	GRAB
PHENOLS 34030 1 0 0 EFFLUENT GROSS VALUE	SAMPLE MEASUREMENT	0.00153	0.00766	(51)	******	0.012	0.06	(19)	0	1/7	G
	PERMIT REQUIREMENT	.96 MO AVG	1.72 DAILY MX	KG/DAY	******	3 MO AVG	5 DAILY MX	MG/L		WEEKLY	GRAB
FLOW, IN CONDUIT OR THRU TREATMENT PLANT 50050 1 0 0 EFFLUENT GROSS VALUE	SAMPLE MEASUREMENT	0.01965	0.033	(03)	******	******	******		0	Daily	Continuous
	PERMIT REQUIREMENT	REPORT MO AVG	0.035 DAILY MX	MGD	******	******	******	**** ****		DAILY	CONTIN

NAME/TITLE PRINCIPAL EXECUTIVE OFFICER		TELEPHONE	DATE		
Thomas L. Henderson / Plant Manager	I CERTIFY UNDER PENALTY OF LAW THAT I HAVE PERSONALLY EXAMINED AND AM FAMILIAR WITH THE INFORMATION SUBMITTED HEREIN; AND BASED ON MY INQUIRY OF THOSE INDIVIDUALS IMMEDIATELY RESPONSIBLE FOR OBTAINING THE INFORMATION, I BELIEVE THE SUBMITTED INFORMATION IS TRUE, ACCURATE AND COMPLETE. I AM AWARE THAT THERE ARE SIGNIFICANT PENALTIES FOR SUBMITTING FALSE INFORMATION, INCLUDING THE POSSIBILITY OF FINE AND IMPRISONMENT. SEE 18 U.S.C. § 1001 AND 33 U.S.C. § 1319. *(Penalties under these statutes may include fines up to $10,000 and or maximum imprisonment of between 6 months and 5 years.)*	Thomas L Henderson	AREA CODE / NUMBER	YEAR	MO	DAY
TYPED OR PRINTED		SIGNATURE OF PRINCIPAL EXECUTIVE OFFICER OR AUTHORIZED AGENT		99	10	26

COMMENTS AND EXPLANATION OF ANY VIOLATIONS *(Reference all attachments here)*

PERMITTEE NAME/ADDRESS *(Include Facility Name/Location if Different)*

NAME: KOPPERS INDUSTRIES INC

ADDRESS: P O BOX 160
TIE PLANT MS 38960

FACILITY

LOCATION

ATTN: THOMAS L HENDERSON

NATIONAL POLLUTANT DISCHARGE ELIMINATION SYSTEM *(NPDES)*
DISCHARGE MONITORING REPORT *(DMR)*

(2-16) PERMIT NUMBER: MS0000000

(17-19) DISCHARGE NUMBER: 001 A

MINOR
(SUBR 30)
F - FINAL
TOTAL FACILITY DISCHARGE

Form Approved.
OMB No. 2040-0004
Approval expires 05-31-98

OCT - 4 1999

TAT

MONITORING PERIOD	YEAR	MO	DAY		YEAR	MO	DAY
FROM	99	08	01	TO	99	08	31
	(20-21)	(22-23)	(24-25)		(26-27)	(28-29)	(30-31)

*** NO DISCHARGE |__| ***

NOTE: Read instructions before completing this form.

PARAMETER (32-37)		(3 Card Only) QUANTITY OR LOADING (46-53) AVERAGE	(54-61) MAXIMUM	UNITS	(4 Card Only) QUANTITY OR CONCENTRATION (38-45) MINIMUM	(46-53) AVERAGE	(54-61) MAXIMUM	UNITS	NO. EX (62-63)	FREQUENCY OF ANALYSIS (64-68)	SAMPLE TYPE (69-70)
BOD, 5-DAY (20 DEG. C) 00310 1 0 0 EFFLUENT GROSS VALUE	SAMPLE MEASUREMENT	0	0	(26)	******	0	0	(19)	0	1/7	C
	PERMIT REQUIREMENT	70 MO AVG	140 DAILY MX	LBS/DY	******	240 MO AVG	480 DAILY MX	MG/L		WEEKLY	COMPOS
PH 00400 1 0 0 EFFLUENT GROSS VALUE	SAMPLE MEASUREMENT	******	******		7.30	******	7.59	(12)	0	2/7	G
	PERMIT REQUIREMENT	******	******	**** ****	6.5 MINIMUM	******	9.5 MAXIMUM	SU		TWICE/WEEK	GRAB
SOLIDS, TOTAL SUSPENDED 00530 1 0 0 EFFLUENT GROSS VALUE	SAMPLE MEASUREMENT	5.998	23.509	(26)	******	30.8	116	(19)	0	1/7	C
	PERMIT REQUIREMENT	88 MO AVG	175 DAILY MX	LBS/DY	******	300 MO AVG	600 DAILY MX	MG/L		WEEKLY	COMPOS
OIL & GREASE (FREON EXTR.-IR METH) TOT,SO 00550 1 0 0 EFFLUENT GROSS VALUE	SAMPLE MEASUREMENT	0.193	0.538	(51)	******	1.002	2.88	(19)	0	1/7	G
	PERMIT REQUIREMENT	REPORT MO AVG	29.2 DAILY MX	KG/DAY	******	REPORT MO AVG	100 DAILY MX	MG/L		WEEKLY	GRAB
PENTACHLOROPHENOL 39032 1 0 0 EFFLUENT GROSS VALUE	SAMPLE MEASUREMENT	0	0	(51)	******	0	0	(19)	0	1/7	G
	PERMIT REQUIREMENT	.054 MO AVG	.102 DAILY MX	KG/DAY	******	.16 MO AVG	.36 DAILY MX	MG/L		WEEKLY	GRAB
PHENOLS 32730 1 0 0 EFFLUENT GROSS VALUE	SAMPLE MEASUREMENT	0	0	(51)	******	0	0	(19)	0	1/7	G
	PERMIT REQUIREMENT	.36 MO AVG	1.07 DAILY MX	KG/DAY	******	1 MO AVG	2 DAILY MX	MG/L		WEEKLY	GRAB
FLOW, IN CONDUIT OR THRU TREATMENT PLANT 50050 1 0 0 EFFLUENT GROSS VALUE	SAMPLE MEASUREMENT	0.02012	0.02930	(03)	******	******	******	MGD	0	Daily	Cont.
	PERMIT REQUIREMENT	REPORT MO AVG	REPORT DAILY MX	MGD	******	******	******	**** ****		DAILY	CONTIN

NAME/TITLE PRINCIPAL EXECUTIVE OFFICER

Thomas L. Henderson / Plant Manager

TYPED OR PRINTED

I CERTIFY UNDER PENALTY OF LAW THAT I HAVE PERSONALLY EXAMINED AND AM FAMILIAR WITH THE INFORMATION SUBMITTED HEREIN; AND BASED ON MY INQUIRY OF THOSE INDIVIDUALS IMMEDIATELY RESPONSIBLE FOR OBTAINING THE INFORMATION, I BELIEVE THE SUBMITTED INFORMATION IS TRUE, ACCURATE AND COMPLETE. I AM AWARE THAT THERE ARE SIGNIFICANT PENALTIES FOR SUBMITTING FALSE INFORMATION, INCLUDING THE POSSIBILITY OF FINE AND IMPRISONMENT. SEE 18 U.S.C. § 1001 AND 33 U.S.C. § 1319. *(Penalties under these statutes may include fines up to $10,000 and or maximum imprisonment of between 6 months and 5 years.)*

Thomas L Henderson

SIGNATURE OF PRINCIPAL EXECUTIVE OFFICER OR AUTHORIZED AGENT

TELEPHONE		DATE		
AREA CODE	NUMBER	YEAR	MO	DAY
		99	9	28

COMMENTS AND EXPLANATION OF ANY VIOLATIONS *(Reference all attachments here)*

PERMITTEE NAME/ADDRESS (Include Facility Name/Location if Different)

NAME: KEPPERS INDUSTRIES INC

ADDRESS: P.O. BOX 150
TILE PLANT MS 38930

FACILITY LOCATION: GRENADA MINK (SUBR MO) F - FINAL TOTAL FACILITY DISCHARGE

ATTN: THOMAS L HENDERSON

NATIONAL POLLUTANT DISCHARGE ELIMINATION SYSTEM (NPDES)
DISCHARGE MONITORING REPORT (DMR)

Form Approved.
OMB No. 2040-0004
Approval expires 05-31-98

PERMIT NUMBER (2-16)	DISCHARGE NUMBER (17-19)
MS0023300	001

MONITORING PERIOD	YEAR	MO	DAY		YEAR	MO	DAY
FROM	99	02	01	TO	99	02	28
	(20-21)	(22-23)	(24-25)		(26-27)	(28-29)	(30-31)

*** NO DISCHARGE [ ] ***

NOTE: Read instructions before completing this form.

PARAMETER (32-37)		(3 Card Only) QUANTITY OR LOADING (46-53) AVERAGE	(54-61) MAXIMUM	UNITS	(4 Card Only) QUANTITY OR CONCENTRATION (38-45) MINIMUM	(46-53) AVERAGE	(54-61) MAXIMUM	UNITS	NO. EX (62-63)	FREQUENCY OF ANALYSIS (64-68)	SAMPLE TYPE (69-70)
BOD, 5-DAY (20 DEG. C) 00310 1 0 0 EFFLUENT GROSS VALUE	SAMPLE MEASUREMENT	1.166	2.491	(26)	******	7.44	11.4	(19)	0	1/7	Comp.
	PERMIT REQUIREMENT	70 MO AVG	140 DAILY MX	LBS/DY	******	240 MO AVG	480 DAILY MX	MG/L		WEEKLY	COMP24
00400 1 0 0 EFFLUENT GROSS VALUE	SAMPLE MEASUREMENT	******	******		7.15	******	7.35	(12)	0	2/7	Grab
	PERMIT REQUIREMENT	******	******	**** ****	6.5 MINIMUM	******	9.0 MAXIMUM	SU		TWICE/WEEK	GRAB
SOLIDS, TOTAL SUSPENDED 00530 1 0 0 EFFLUENT GROSS VALUE	SAMPLE MEASUREMENT	5.964	11.399	(26)	******	38.6	68	(19)	0	1/7	Comp
	PERMIT REQUIREMENT	35 MO AVG	175 DAILY MX	LBS/DY	******	300 MO AVG	600 DAILY MX	MG/L		WEEKLY	COMP24
OIL & GREASE (FREON EXTR.-IR METH) TOT.RC 00560 1 0 0 EFFLUENT GROSS VALUE	SAMPLE MEASUREMENT	0.289	0.612	(01)	******	2.028	3.66	(19)	0	1/7	Grab
	PERMIT REQUIREMENT	REPORT MO AVG	29.2 DAILY MX	KG/DAY	******	REPORT MO AVG	100 DAILY MX	MG/L		WEEKLY	GRAB
PENTACHLOROPHENOL 39032 1 0 0 EFFLUENT GROSS VALUE	SAMPLE MEASUREMENT	0	0	(01)	******	0	0	(19)	0	1/7	Grab
	PERMIT REQUIREMENT	.022 MO AVG	.132 DAILY MX	KG/DAY	******	.18 MO AVG	.36 DAILY MX	MG/L		WEEKLY	GRAB
PHENOLS 32730 1 0 0 EFFLUENT GROSS VALUE	SAMPLE MEASUREMENT	0	0	(01)	******	0	0	(19)	0	1/7	Grab
	PERMIT REQUIREMENT	.35 MO AVG	1.75 DAILY MX	KG/DAY	******	1 MO AVG	5 DAILY MX	MG/L		WEEKLY	GRAB
FLOW, IN CONDUIT OR THRU TREATMENT PLANT 50050 1 0 0 EFFLUENT GROSS VALUE	SAMPLE MEASUREMENT	0.01775	0.0262	(02)	******	******	******		0	Daily	Continuous
	PERMIT REQUIREMENT	REPORT MO AVG	0.035 DAILY MX	MGD	******	******	******	**** ****		DAILY	CONTIN

NAME/TITLE PRINCIPAL EXECUTIVE OFFICER: Thomas L. Henderson / Plant Manager

TYPED OR PRINTED

I CERTIFY UNDER PENALTY OF LAW THAT I HAVE PERSONALLY EXAMINED AND AM FAMILIAR WITH THE INFORMATION SUBMITTED HEREIN; AND BASED ON MY INQUIRY OF THOSE INDIVIDUALS IMMEDIATELY RESPONSIBLE FOR OBTAINING THE INFORMATION, I BELIEVE THE SUBMITTED INFORMATION IS TRUE, ACCURATE AND COMPLETE. I AM AWARE THAT THERE ARE SIGNIFICANT PENALTIES FOR SUBMITTING FALSE INFORMATION, INCLUDING THE POSSIBILITY OF FINE AND IMPRISONMENT. SEE 18 U.S.C. § 1001 AND 33 U.S.C. § 1319. *(Penalties under these statutes may include fines up to $10,000 and or maximum imprisonment of between 6 months and 5 years.)*

Thomas L. Henderson

SIGNATURE OF PRINCIPAL EXECUTIVE OFFICER OR AUTHORIZED AGENT

TELEPHONE		DATE		
AREA CODE	NUMBER	YEAR	MO	DAY
601	226-4584	99	3	15

COMMENTS AND EXPLANATION OF ANY VIOLATIONS *(Reference all attachments here)*

1999

EPA Form 3320-1 (08-95) Previous editions may be used. (REPLACES EPA FORM T-40 WHICH MAY NOT BE USED.)

00121/990119-1525

PERMITTEE NAME/ADDRESS (Include Facility Name/Location if Different)
NAME NORPARS INDUSTRIES INC
ADDRESS P O BOX 150
TIE PLANT MS 38960

NATIONAL POLLUTANT DISCHARGE ELIMINATION SYSTEM (NPDES)
DISCHARGE MONITORING REPORT (DMR)

Form Approved.
OMB No. 2040-0004
Approval expires 03-31-98

(2-16) MS0030300 — PERMIT NUMBER
(17-19) 001 A — DISCHARGE NUMBER

NIMAK
(SUBR NO)
F - FINAL
TOTAL FACILITY DISCHARGE

FACILITY
LOCATION
ATTN: THOMAS L HENDERSON

MONITORING PERIOD

	YEAR	MO	DAY		YEAR	MO	DAY
FROM	99	07	01	TO	99	07	31
	(20-21)	(22-23)	(24-25)		(26-27)	(28-29)	(30-31)

*** NO DISCHARGE |__| ***

NOTE: Read Instructions before completing this form.

PARAMETER (32-37)		(3 Card Only) (46-53) QUANTITY OR LOADING (54-61) AVERAGE	MAXIMUM	UNITS	(4 Card Only) (38-45) QUANTITY OR CONCENTRATION (46-53) MINIMUM	(54-61) AVERAGE	MAXIMUM	UNITS	NO. EX (62-63)	FREQUENCY OF ANALYSIS (64-68)	SAMPLE TYPE (69-70)
BOD, 5-DAY (20 DEG. C) 00310 1 0 0 EFFLUENT GROSS VALUE	SAMPLE MEASUREMENT	0.425	0.988	(26)	******	2.56	6.3	(19)	0	1/7	C
	PERMIT REQUIREMENT	70 MO AVG	140 DAILY MX	LBS/DY	******	240 MO AVG	480 DAILY MX	MG/L		WEEKLY	CP24
00400 1 0 0 EFFLUENT GROSS VALUE	SAMPLE MEASUREMENT	******	******		7.15	******	7.70	(12)	0	2/7	G
	PERMIT REQUIREMENT	******	******	**** ****	6.5 MINIMUM	******	9.5 MAXIMUM	SU		TWICE/WEEK	GRAB
SOLIDS, TOTAL SUSPENDED 00530 1 0 0 EFFLUENT GROSS VALUE	SAMPLE MEASUREMENT	1.956	5.017	(26)	******	11.8	32	(19)	0	1/7	C
	PERMIT REQUIREMENT	50 MO AVG	175 DAILY MX	LBS/DY	******	300 MO AVG	600 DAILY MX	MG/L		WEEKLY	CP24
OIL & GREASE (FREON EXTR.-IR METHOD) 00560 1 0 0 EFFLUENT GROSS VALUE	SAMPLE MEASUREMENT	0.032	0.158	(01)	******	0.18	0.9	(19)	0	1/7	G
	PERMIT REQUIREMENT	REPORT MO AVG	2.2 DAILY MX	KG/DAY	******	REPORT MO AVG	100 DAILY MX	MG/L		WEEKLY	GRAB
PENTACHLOROPHENOL 39032 1 0 0 EFFLUENT GROSS VALUE	SAMPLE MEASUREMENT	0	0	(01)	******	0	0	(19)	0	1/7	G
	PERMIT REQUIREMENT	.053 MO AVG	.102 DAILY MX	KG/DAY	******	.15 MO AVG	.30 DAILY MX	MG/L		WEEKLY	GRAB
PHENOLS 32730 1 0 0 EFFLUENT GROSS VALUE	SAMPLE MEASUREMENT	0.002	0.007	(01)	******	0.014	0.04	(19)	0	1/7	G
	PERMIT REQUIREMENT	.38 MO AVG	1.75 DAILY MX	KG/DAY	******	5 MO AVG	5 DAILY MX	MG/L		WEEKLY	GRAB
FLOW, IN CONDUIT OR THRU TREATMENT PLANT 50050 1 0 0 EFFLUENT GROSS VALUE	SAMPLE MEASUREMENT	0.019519	0.0305	(03)	******	******	******		0	Daily	Contin.
	PERMIT REQUIREMENT	REPORT MO AVG	0.035 DAILY MX	MGD	******	******	******	**** ****		DAILY	CONTIN

NAME/TITLE PRINCIPAL EXECUTIVE OFFICER
Thomas L. Henderson / Plant Manager
TYPED OR PRINTED

I CERTIFY UNDER PENALTY OF LAW THAT I HAVE PERSONALLY EXAMINED AND AM FAMILIAR WITH THE INFORMATION SUBMITTED HEREIN; AND BASED ON MY INQUIRY OF THOSE INDIVIDUALS IMMEDIATELY RESPONSIBLE FOR OBTAINING THE INFORMATION, I BELIEVE THE SUBMITTED INFORMATION IS TRUE, ACCURATE AND COMPLETE. I AM AWARE THAT THERE ARE SIGNIFICANT PENALTIES FOR SUBMITTING FALSE INFORMATION, INCLUDING THE POSSIBILITY OF FINE AND IMPRISONMENT. SEE 18 U.S.C. § 1001 AND 33 U.S.C. § 1319. *(Penalties under these statutes may include fines up to $10,000 and or maximum imprisonment of between 6 months and 5 years.)*

Thomas L. Henderson
SIGNATURE OF PRINCIPAL EXECUTIVE OFFICER OR AUTHORIZED AGENT

TELEPHONE		DATE		
601	226-4584	99	8	17
AREA CODE	NUMBER	YEAR	MO	DAY

COMMENTS AND EXPLANATION OF ANY VIOLATIONS *(Reference all attachments here)*

PERMITTEE NAME/ADDRESS (Include Facility Name/Location if Different)

NAME: KOPPERS INDUSTRIES INC

ADDRESS: P O BOX 180
TIE PLANT MS 38965

FACILITY

LOCATION

ATT: THOMAS L HENDERSON

NATIONAL POLLUTANT DISCHARGE ELIMINATION SYSTEM (NPDES)
DISCHARGE MONITORING REPORT (DMR)
(2-16)

PERMIT NUMBER: MS0002...

(17-19) DISCHARGE NUMBER: 001 A

MONITORING PERIOD

	YEAR	MO	DAY		YEAR	MO	DAY
FROM	99	06	01	TO	99	06	30
	(20-21)	(22-23)	(24-25)		(26-27)	(28-29)	(30-31)

PIPE - PREVIOUS GRENADA

MINOR
(SUBR NO)
F - FINAL
TOTAL FACILITY DISCHARGE

JUL 23 1999

*** NO DISCHARGE | | ***

Form Approved.
OMB No. 2040-0004
Approval expires 05-31-98

TAT

NOTE: Read instructions before completing this form.

PARAMETER (32-37)		(3 Card Only) QUANTITY OR LOADING (46-53) AVERAGE	(54-61) MAXIMUM	UNITS	(4 Card Only) QUANTITY OR CONCENTRATION (38-45) MINIMUM	(46-53) AVERAGE	(54-61) MAXIMUM	UNITS	NO. EX (62-63)	FREQUENCY OF ANALYSIS (64-68)	SAMPLE TYPE (69-70)
BOD, 5-DAY (20 DEG. C) 00310 1 0 0 EFFLUENT GROSS VALUE	SAMPLE MEASUREMENT	0.403	0.667	(26)	******	3.174	4.80	(19)	0	W	C
	PERMIT REQUIREMENT	70 MO AVG	140 DAILY MX	LBS/DY	******	240 MO AVG	480 DAILY MX	MG/L		WEEKLY	COMP24
00400 1 0 0 EFFLUENT GROSS VALUE	SAMPLE MEASUREMENT	******	******		6.45	******	7.5	(12)	0	W 2/7	G
	PERMIT REQUIREMENT	******	******	**** ****	6.0 MINIMUM	******	9.0 MAXIMUM	SU		WEEKLY	GRAB
SOLIDS, TOTAL SUSPENDED 00530 1 0 0 EFFLUENT GROSS VALUE	SAMPLE MEASUREMENT	5.366	8.069	(26)	******	40	66	(19)	0	W	C
	PERMIT REQUIREMENT	35 MO AVG	175 DAILY MX	LBS/DY	******	300 MO AVG	600 DAILY MX	MG/L		WEEKLY	COMP24
OIL & GREASE (FREON EXTR.-IR METH) TOT. RE 00560 1 0 0 EFFLUENT GROSS VALUE	SAMPLE MEASUREMENT	0.376	1.076	(51)	******	2.294	6	(19)	0	W	G
	PERMIT REQUIREMENT	REPORT MO AVG	29.2 DAILY MX	KG/DAY	******	REPORT MO AVG	100 DAILY MX	MG/L		WEEKLY	GRAB
PENTACHLOROPHENOL 39032 1 0 0 EFFLUENT GROSS VALUE	SAMPLE MEASUREMENT	0	0	(51)	******	0	0	(19)	0	W	G
	PERMIT REQUIREMENT	.058 MO AVG	.100 DAILY MX	KG/DAY	******	.18 MO AVG	.35 DAILY MX	MG/L		WEEKLY	GRAB
PHENOLS 34694 1 0 0 EFFLUENT GROSS VALUE	SAMPLE MEASUREMENT	0.009	0.009	(51)	******	0.022	0.05	(19)	0	W	G
	PERMIT REQUIREMENT	.93 MO AVG	1.70 DAILY MX	KG/DAY	******	2 MO AVG	5 DAILY MX	MG/L		WEEKLY	GRAB
FLOW, IN CONDUIT OR THRU TREATMENT PLANT 50050 1 0 0 EFFLUENT GROSS VALUE	SAMPLE MEASUREMENT	0.016186	0.0332	(03)	******	******	******		0	Daily	Contin.
	PERMIT REQUIREMENT	REPORT MO AVG	0.035 DAILY MX	MGD	******	******	******	**** ****		DAILY	CONTIN

NAME/TITLE PRINCIPAL EXECUTIVE OFFICER			TELEPHONE		DATE		
Thomas L. Henderson / Plant Manager	I CERTIFY UNDER PENALTY OF LAW THAT I HAVE PERSONALLY EXAMINED AND AM FAMILIAR WITH THE INFORMATION SUBMITTED HEREIN; AND BASED ON MY INQUIRY OF THOSE INDIVIDUALS IMMEDIATELY RESPONSIBLE FOR OBTAINING THE INFORMATION, I BELIEVE THE SUBMITTED INFORMATION IS TRUE, ACCURATE AND COMPLETE. I AM AWARE THAT THERE ARE SIGNIFICANT PENALTIES FOR SUBMITTING FALSE INFORMATION, INCLUDING THE POSSIBILITY OF FINE AND IMPRISONMENT. SEE 18 U.S.C. § 1001 AND 33 U.S.C. § 1319. (Penalties under these statutes may include fines up to $10,000 and or maximum imprisonment of between 6 months and 5 years.)	Thomas L. Henderson	662	226-4584	99	7	16
TYPED OR PRINTED		SIGNATURE OF PRINCIPAL EXECUTIVE OFFICER OR AUTHORIZED AGENT	AREA CODE	NUMBER	YEAR	MO	DAY

COMMENTS AND EXPLANATION OF ANY VIOLATIONS (Reference all attachments here)

PERMITTEE NAME/ADDRESS *(Include Facility Name/ Location if Different)*
NAME KOPPERS INDUSTRIES INC
ADDRESS P O BOX 150
TIE PLANT MS 39560

FACILITY
LOCATION
ATTN: THOMAS L HENDERSON

NATIONAL POLLUTANT DISCHARGE ELIMINATION SYSTEM *(NPDES)*
DISCHARGE MONITORING REPORT *(DMR)*

(2-16) PERMIT NUMBER	(17-19) DISCHARGE NUMBER
MS0000300	001 A

MONITORING PERIOD	YEAR	MO	DAY		YEAR	MO	DAY
FROM	99	05	01	TO	99	05	31
	(20-21)	(22-23)	(24-25)		(26-27)	(28-29)	(30-31)

Form Approved.
OMB No. 2040-0004
Approval expires 05-31-98

MARK (SUBMITTED) FINAL 8 1999
TOTAL FACILITY DISCHARGE
*** NO DISCHARGE ☐ ***

NOTE: Read Instructions before completing this form.

PARAMETER (32-37)		(3 Card Only) QUANTITY OR LOADING (46-53) AVERAGE	(54-61) MAXIMUM	UNITS	(4 Card Only) QUANTITY OR CONCENTRATION (38-45) MINIMUM	(46-53) AVERAGE	(54-61) MAXIMUM	UNITS	NO. EX (62-63)	FREQUENCY OF ANALYSIS (64-68)	SAMPLE TYPE (69-70)
BOD, 5-DAY (20 DEG. C) 00310 1 0 0 EFFLUENT GROSS VALUE	SAMPLE MEASUREMENT	1.903	7.446	(26)	******	15.99	57.6	(19)	0	1/7	C
	PERMIT REQUIREMENT	10 MO AVG	140 DAILY MX	LBS/DY	******	240 MO AVG	450 DAILY MX	MG/L		WEEKLY	COMP24
00400 1 0 0 EFFLUENT GROSS VALUE	SAMPLE MEASUREMENT	******	******		6.95	******	7.97	(12)	0	3/7	G
	PERMIT REQUIREMENT	******	******	**** ****	6.5 MINIMUM	******	9.0 MAXIMUM	SU		DICE/ WEEK	GRAB
SOLIDS, TOTAL SUSPENDED 00530 1 0 0 EFFLUENT GROSS VALUE	SAMPLE MEASUREMENT	6.667	15.383	(26)	******	65.6	123	(19)	0	1/7	C
	PERMIT REQUIREMENT	88 MO AVG	175 DAILY MX	LBS/DY	******	300 MO AVG	650 DAILY MX	MG/L		WEEKLY	COMP24
OIL & GREASE (FREON EXTR.-IR METH)TOT,RU 00560 1 0 0 EFFLUENT GROSS VALUE	SAMPLE MEASUREMENT	0.262	0.875	(01)	******	2.312	6.77	(19)	0	1/7	G
	PERMIT REQUIREMENT	REPORT MO AVG	29.2 DAILY MX	KG/ DAY	******	REPORT MO AVG	100 DAILY MX	MG/L		WEEKLY	GRAB
PENTACHLOROPHENOL 39032 1 0 0 EFFLUENT GROSS VALUE	SAMPLE MEASUREMENT	.00078	.00388	(01)	******	0.006	0.03	(19)	0	1/7	G
	PERMIT REQUIREMENT	.053 MO AVG	.102 DAILY MX	KG/ DAY	******	.18 MO AVG	.35 DAILY MX	MG/L		WEEKLY	GRAB
PHENOLS 32730 1 0 0 EFFLUENT GROSS VALUE	SAMPLE MEASUREMENT	0	0	(01)	******	0	0	(19)	0	1/7	G
	PERMIT REQUIREMENT	.86 MO AVG	1.75 DAILY MX	KG/ DAY	******	3 MO AVG	6 DAILY MX	MG/L		WEEKLY	GRAB
FLOW, IN CONDUIT OR THRU TREATMENT PLANT 50050 1 0 0 EFFLUENT GROSS VALUE	SAMPLE MEASUREMENT	0.01336	0.0237	(03)	******	******	******			Daily	Continuous
	PERMIT REQUIREMENT	REPORT MO AVG	0.035 DAILY MX	MGD	******	******	******	**** ****		DAILY	CONTIN

NAME/TITLE PRINCIPAL EXECUTIVE OFFICER			TELEPHONE		DATE		
Thomas L. Henderson / Plant Manager	I CERTIFY UNDER PENALTY OF LAW THAT I HAVE PERSONALLY EXAMINED AND AM FAMILIAR WITH THE INFORMATION SUBMITTED HEREIN; AND BASED ON MY INQUIRY OF THOSE INDIVIDUALS IMMEDIATELY RESPONSIBLE FOR OBTAINING THE INFORMATION, I BELIEVE THE SUBMITTED INFORMATION IS TRUE, ACCURATE AND COMPLETE. I AM AWARE THAT THERE ARE SIGNIFICANT PENALTIES FOR SUBMITTING FALSE INFORMATION, INCLUDING THE POSSIBILITY OF FINE AND IMPRISONMENT. SEE 18 U.S.C. § 1001 AND 33 U.S.C. § 1319. *(Penalties under these statutes may include fines up to $10,000 and or maximum imprisonment of between 6 months and 5 years.)*	Thomas L. Henderson	601	226-4584	99	6	16
TYPED OR PRINTED		SIGNATURE OF PRINCIPAL EXECUTIVE OFFICER OR AUTHORIZED AGENT	AREA CODE	NUMBER	YEAR	MO	DAY

COMMENTS AND EXPLANATION OF ANY VIOLATIONS *(Reference all attachments here)*

PERMITTEE NAME/ADDRESS *(Include Facility Name/Location if Different)*

NAME KOPPERS INDUSTRIES INC

ADDRESS P O BOX 160

TIE PLANT MS 38960

FACILITY

LOCATION

ATTN: THOMAS L HENDERSON

NATIONAL POLLUTANT DISCHARGE ELIMINATION SYSTEM *(NPDES)*

DISCHARGE MONITORING REPORT *(DMR)*

(2-16)	(17-19)
MS0090300	001 Y
PERMIT NUMBER	DISCHARGE NUMBER

MINOR
(SUBR NO)
F - FINAL TAT
TOTAL FACILITY DISCHARGE

Form Approved.
OMB No. 2040-0004
Approval expires 05-31-98

MONITORING PERIOD	YEAR	MO	DAY		YEAR	MO	DAY
FROM	99	01	01	TO	99	06	30
	(20-21)	(22-23)	(24-25)		(26-27)	(28-29)	(30-31)

*** NO DISCHARGE |__| ***

NOTE: Read Instructions before completing this form.

PARAMETER (32-37)		(3 Card Only) QUANTITY OR LOADING (46-53) AVERAGE	(54-61) MAXIMUM	UNITS	(4 Card Only) QUANTITY OR CONCENTRATION (38-45) MINIMUM	(46-53) AVERAGE	(54-61) MAXIMUM	UNITS	NO. EX (62-63)	FREQUENCY OF ANALYSIS (64-68)	SAMPLE TYPE (69-70)
ARSENIC, TOTAL RECOVERABLE 00978 1 0 0 EFFLUENT GROSS VALUE	SAMPLE MEASUREMENT	0.00130	0.00130	(26)	******	0.016	0.016	(19)	0	6/12M	C
	PERMIT REQUIREMENT	REPORT ANNL AVG	0.131 ANNL MAX	LBS/DY	******	REPORT ANNL AVG	.45 ANNL MAX	MG/L		SEMI-ANNUAL	COMP24
[illegible]NIUM TOTAL RECOVERABLE 01118 1 0 0 EFFLUENT GROSS VALUE	SAMPLE MEASUREMENT	0	0	(26)	******	0	0	(19)	0	6/12M	C
	PERMIT REQUIREMENT	REPORT ANNL AVG	1.168 ANNL MAX	LBS/DY	******	REPORT ANNL AVG	4.0 ANNL MAX	MG/L		SEMI-ANNUAL	COMP24
COPPER TOTAL RECOVERABLE 01119 1 0 0 EFFLUENT GROSS VALUE	SAMPLE MEASUREMENT	0.00138	0.00138	(26)	******	0.017	0.017	(19)	0	6/12M	C
	PERMIT REQUIREMENT	REPORT ANNL AVG	0.642 ANNL MAX	LBS/DY	******	REPORT ANNL AVG	2.2 ANNL MAX	MG/L		SEMI-ANNUAL	COMP24
	SAMPLE MEASUREMENT										
	PERMIT REQUIREMENT										
	SAMPLE MEASUREMENT										
	PERMIT REQUIREMENT										
	SAMPLE MEASUREMENT										
	PERMIT REQUIREMENT										
	SAMPLE MEASUREMENT										
	PERMIT REQUIREMENT										

NAME/TITLE PRINCIPAL EXECUTIVE OFFICER

Thomas L. Henderson / Plant Manager

TYPED OR PRINTED

I CERTIFY UNDER PENALTY OF LAW THAT I HAVE PERSONALLY EXAMINED AND AM FAMILIAR WITH THE INFORMATION SUBMITTED HEREIN; AND BASED ON MY INQUIRY OF THOSE INDIVIDUALS IMMEDIATELY RESPONSIBLE FOR OBTAINING THE INFORMATION, I BELIEVE THE SUBMITTED INFORMATION IS TRUE, ACCURATE AND COMPLETE. I AM AWARE THAT THERE ARE SIGNIFICANT PENALTIES FOR SUBMITTING FALSE INFORMATION, INCLUDING THE POSSIBILITY OF FINE AND IMPRISONMENT. SEE 18 U.S.C. § 1001 AND 33 U.S.C. § 1319. *(Penalties under those statutes may include fines up to $10,000 and or maximum imprisonment of between 6 months and 5 years.)*

Thomas L. Henderson

SIGNATURE OF PRINCIPAL EXECUTIVE OFFICER OR AUTHORIZED AGENT

TELEPHONE		DATE		
601	226-4584	99	6	16
AREA CODE	NUMBER	YEAR	MO	DAY

COMMENTS AND EXPLANATION OF ANY VIOLATIONS *(Reference all attachments here)*

EPA Form 3320-1 (08-95) Previous editions may be used. (REPLACES EPA FORM T-40 WHICH MAY NOT BE USED.)

00192/990119-1525

PAGE 1 OF 1

PERMITTEE NAME/ADDRESS (Include Facility Name/ Location if Different)
NAME KOPPERS INDUSTRIES INC
ADDRESS P O BOX 160
TIE PLANT MS 38960

FACILITY
LOCATION
ATTN: THOMAS L HENDERSON

NATIONAL POLLUTANT DISCHARGE ELIMINATION SYSTEM (NPDES)
DISCHARGE MONITORING REPORT (DMR)

Form Approved.
OMB No. 2040-0004
Approval expires 05-31-98

(2-16) MS0090300 PERMIT NUMBER
(17-19) 001 A DISCHARGE NUMBER

MINOR
(SUBR NO)
F - FINAL
TOTAL FACILITY DISCHARGE

MONITORING PERIOD

	YEAR	MO	DAY		YEAR	MO	DAY
FROM	99	04	01	TO	99	04	30
	(20-21)	(22-23)	(24-25)		(26-27)	(28-29)	(30-31)

*** NO DISCHARGE [ ] ***

NOTE: Read Instructions before completing this form.

PARAMETER (32-37)		(3 Card Only) QUANTITY OR LOADING (46-53) AVERAGE	(54-61) MAXIMUM	UNITS	(4 Card Only) QUANTITY OR CONCENTRATION (38-45) MINIMUM	(46-53) AVERAGE	(54-61) MAXIMUM	UNITS	NO. EX (62-63)	FREQUENCY OF ANALYSIS (64-68)	SAMPLE TYPE (69-70)
BOD, 5-DAY (20 DEG. C) 00310 1 0 0 EFFLUENT GROSS VALUE	SAMPLE MEASUREMENT	0.812	2.498	(26)	******	5.35	14.9	(19)	0	1/7	C
	PERMIT REQUIREMENT	70 MO AVG	140 DAILY MX	LBS/DY	******	240 MO AVG	630 DAILY MX	MG/L		WEEKLY	CALCPZ4
00400 1 0 0 EFFLUENT GROSS VALUE	SAMPLE MEASUREMENT	******	******		6.25	******	7.25	(12)	0	2/7	G
	PERMIT REQUIREMENT	******	******	**** ****	5.5 MINIMUM	******	9.0 MAXIMUM	SU		DAILY/ DAILY	GRAB
SOLIDS, TOTAL SUSPENDED 00530 1 0 0 EFFLUENT GROSS VALUE	SAMPLE MEASUREMENT	8.731	25.648	(26)	******	54.8	153	(19)	0	1/7	C
	PERMIT REQUIREMENT	50 MO AVG	175 DAILY MX	LBS/DY	******	300 MO AVG	600 DAILY MX	MG/L		WEEKLY	CALCPZ4
OIL & GREASE (FREON EXTR.-IR METHOD) TOT. RC 00560 1 0 0 EFFLUENT GROSS VALUE	SAMPLE MEASUREMENT	0.223	0.378	(01)	******	1.476 ~~0.223~~	2.3 ~~0.378~~	(19)	0	1/7	G
	PERMIT REQUIREMENT	REPORT MO AVG	29.2 DAILY MX	KG/ DAY	******	REPORT MO AVG	100 DAILY MX	MG/L		WEEKLY	GRAB
PENTACHLOROPHENOL 39032 1 0 0 EFFLUENT GROSS VALUE	SAMPLE MEASUREMENT	0	0	(01)	******	0	0	(19)	0	1/7	G
	PERMIT REQUIREMENT	.054 MO AVG	.102 DAILY MX	KG/ DAY	******	.18 MO AVG	.36 DAILY MX	MG/L		WEEKLY	GRAB
PHENOLS 46000 1 0 0 EFFLUENT GROSS VALUE	SAMPLE MEASUREMENT	0	0	(01)	******	0	0	(19)	0	1/7	G
	PERMIT REQUIREMENT	.84 MO AVG	1.75 DAILY MX	KG/ DAY	******	3 MO AVG	6 DAILY MX	MG/L		WEEKLY	GRAB
FLOW, IN CONDUIT OR THRU TREATMENT PLANT 50050 1 0 0 EFFLUENT GROSS VALUE	SAMPLE MEASUREMENT	0.01807	0.0294	(03)	******	******	******		0	Daily	Continuous
	PERMIT REQUIREMENT	REPORT MO AVG	0.035 DAILY MX	MGD	******	******	******	**** ****		DAILY	CONTIN

NAME/TITLE PRINCIPAL EXECUTIVE OFFICER		TELEPHONE		DATE		
Thomas L. Henderson / Plant Manager	I CERTIFY UNDER PENALTY OF LAW THAT I HAVE PERSONALLY EXAMINED AND AM FAMILIAR WITH THE INFORMATION SUBMITTED HEREIN; AND BASED ON MY INQUIRY OF THOSE INDIVIDUALS IMMEDIATELY RESPONSIBLE FOR OBTAINING THE INFORMATION, I BELIEVE THE SUBMITTED INFORMATION IS TRUE, ACCURATE AND COMPLETE. I AM AWARE THAT THERE ARE SIGNIFICANT PENALTIES FOR SUBMITTING FALSE INFORMATION, INCLUDING THE POSSIBILITY OF FINE AND IMPRISONMENT. SEE 18 U.S.C. § 1001 AND 33 U.S.C. § 1319. (Penalties under these statutes may include fines up to $10,000 and or maximum imprisonment of between 6 months and 5 years.)	Thomas L. Henderson	662	226 4584	99	05	12
TYPED OR PRINTED		SIGNATURE OF PRINCIPAL EXECUTIVE OFFICER OR AUTHORIZED AGENT	AREA CODE	NUMBER	YEAR	MO	DAY

COMMENTS AND EXPLANATION OF ANY VIOLATIONS (Reference all attachments here)

PERMITTEE NAME/ADDRESS *(Include Facility Name/ Location if Different)*
NAME KOPPERS INDUSTRIES INC
ADDRESS P O BOX 160
TIE PLANT MS 38960

FACILITY
LOCATION
ATTN: THOMAS L HENDERSON

NATIONAL POLLUTANT DISCHARGE ELIMINATION SYSTEM *(NPDES)*
DISCHARGE MONITORING REPORT *(DMR)*

(2-16)	(17-19)
MS0000303	001 3
PERMIT NUMBER	DISCHARGE NUMBER

MINOR
(SUB NO)
F - FINAL
TOTAL FACILITY DISCHARGE

TAT

MONITORING PERIOD	YEAR	MO	DAY		YEAR	MO	DAY
FROM	99	03	01	TO	99	03	31
	(20-21)	(22-23)	(24-25)		(26-27)	(28-29)	(30-31)

*** NO DISCHARGE [ ] ***

Form Approved.
OMB No. 2040-0004
Approval expires 05-31-98

NOTE: Read instructions before completing this form.

PARAMETER (32-37)		(3 Card Only) (46-53) QUANTITY OR LOADING (54-61) AVERAGE	MAXIMUM	UNITS	(4 Card Only) (38-45) QUANTITY OR CONCENTRATION (46-53) MINIMUM	AVERAGE	(54-61) MAXIMUM	UNITS	NO. EX (62-63)	FREQUENCY OF ANALYSIS (64-68)	SAMPLE TYPE (69-70)
BOD, 5-DAY (20 DEG. C) 00310 1 0 0 EFFLUENT GROSS VALUE	SAMPLE MEASUREMENT	1.304	1.954	(26)	******	7.84	13.7	(19)	0	1/7	C
	PERMIT REQUIREMENT	70 MO AVG	140 DAILY MX	LBS/DY	******	240 MO AVG	450 DAILY MX	MG/L		WEEKLY	COMP24
00400 1 0 0 EFFLUENT GROSS VALUE	SAMPLE MEASUREMENT	******	******		6.4	******	7.25	(12)	0	2/7	G
	PERMIT REQUIREMENT	******	******	******	6.0 MINIMUM	******	9.0 MAXIMUM	SU		TWICE/WEEK	GRAB
SOLIDS, TOTAL SUSPENDED 00530 1 0 0 EFFLUENT GROSS VALUE	SAMPLE MEASUREMENT	12.782	17.917	(26)	******	70.6	117	(19)	0	1/7	C
	PERMIT REQUIREMENT	63 MO AVG	175 DAILY MX	LBS/DY	******	300 MO AVG	600 DAILY MX	MG/L		WEEKLY	COMP24
OIL & GREASE (FREON EXTR.-IR METH) TOT.RC 00560 1 0 0 EFFLUENT GROSS VALUE	SAMPLE MEASUREMENT	0.389	0.544	(01)	******	2.354	3.2	(19)	0	1/7	G
	PERMIT REQUIREMENT	REPORT MO AVG	29.2 DAILY MX	KG/DAY	******	REPORT MO AVG	100 DAILY MX	MG/L		WEEKLY	GRAB
PENTACHLOROPHENOL 39032 1 0 0 EFFLUENT GROSS VALUE	SAMPLE MEASUREMENT	0	0	(01)	******	0	0	(19)	0	1/7	G
	PERMIT REQUIREMENT	.057 MO AVG	.102 DAILY MX	KG/DAY	******	.18 MO AVG	[illegible] DAILY MX	MG/L		WEEKLY	GRAB
PHENOLS 46000 1 0 0 EFFLUENT GROSS VALUE	SAMPLE MEASUREMENT	0.00116	0.00578	(01)	******	0.006	0.03	(19)	0	1/7	G
	PERMIT REQUIREMENT	.036 MO AVG	1.75 DAILY MX	KG/DAY	******	3 MO AVG	[illegible] DAILY MX	MG/L		WEEKLY	GRAB
FLOW, IN CONDUIT OR THRU TREATMENT PLANT 50050 1 0 0 EFFLUENT GROSS VALUE	SAMPLE MEASUREMENT	0.0214	0.030	(03)	******	******	******		0	Daily	Continuous
	PERMIT REQUIREMENT	REPORT MO AVG	0.125 DAILY MX	MGD	******	******	******	******		DAILY	CONTIN

TIME 5 1999
RECEIVED

NAME/TITLE PRINCIPAL EXECUTIVE OFFICER		TELEPHONE		DATE		
Thomas L. Henderson / Plant Manager	I CERTIFY UNDER PENALTY OF LAW THAT I HAVE PERSONALLY EXAMINED AND AM FAMILIAR WITH THE INFORMATION SUBMITTED HEREIN; AND BASED ON MY INQUIRY OF THOSE INDIVIDUALS IMMEDIATELY RESPONSIBLE FOR OBTAINING THE INFORMATION, I BELIEVE THE SUBMITTED INFORMATION IS TRUE, ACCURATE AND COMPLETE. I AM AWARE THAT THERE ARE SIGNIFICANT PENALTIES FOR SUBMITTING FALSE INFORMATION, INCLUDING THE POSSIBILITY OF FINE AND IMPRISONMENT. SEE 18 U.S.C. § 1001 AND 33 U.S.C. § 1319. *(Penalties under these statutes may include fines up to $10,000 and or maximum imprisonment of between 6 months and 5 years.)*	Thomas L. Henderson / Plant Manager	662-226-4584	99	4	20
TYPED OR PRINTED		SIGNATURE OF PRINCIPAL EXECUTIVE OFFICER OR AUTHORIZED AGENT	AREA CODE / NUMBER	YEAR	MO	DAY

COMMENTS AND EXPLANATION OF ANY VIOLATIONS *(Reference all attachments here)*

PERMITTEE NAME/ADDRESS *(Include Facility Name/Location if Different)*
NAME KOPPERS INDUSTRIES INC
ADDRESS P O BOX 150
TIE PLANT MS 38960

FACILITY
LOCATION
ATTN: THOMAS L HENDERSON

NATIONAL POLLUTANT DISCHARGE ELIMINATION SYSTEM *(NPDES)*
DISCHARGE MONITORING REPORT *(DMR)*

(2-16)	(17-19)
MSP000300	001 A
PERMIT NUMBER	DISCHARGE NUMBER

MONITORING PERIOD	YEAR	MO	DAY		YEAR	MO	DAY
FROM	99	01	01	TO	99	01	31
	(20-21)	(22-23)	(24-25)		(26-27)	(28-29)	(30-31)

MINOR
(SUB NO)
F - FINAL TAT
TOTAL FACILITY DISCHARGE

*** NO DISCHARGE [__] ***

Form Approved.
OMB No. 2040-0004
Approval expires 05-31-98

NOTE: Read instructions before completing this form.

PARAMETER (32-37)		(3 Card Only) (46-53) QUANTITY OR LOADING (54-61) AVERAGE	MAXIMUM	UNITS	(4 Card Only) (38-45) QUANTITY OR CONCENTRATION (46-53) MINIMUM	(54-61) AVERAGE	MAXIMUM	UNITS	NO. EX (62-63)	FREQUENCY OF ANALYSIS (64-68)	SAMPLE TYPE (69-70)
BOD, 5-DAY (20 DEG. C) 00310 1 0 0 EFFLUENT GROSS VALUE	SAMPLE MEASUREMENT	0.883	1.676	(26)	******	5.81	10	(19)	0	1/7	Comp 24Hr
	PERMIT REQUIREMENT	10 MO AVG	150 DAILY MX	LBS/DY	******	240 MO AVG	440 DAILY MX	MG/L		WEEKLY	COMP24
PH 00400 1 0 0 EFFLUENT GROSS VALUE	SAMPLE MEASUREMENT	******	******		7.08	******	7.64	(12)	0	2/7	Grab
	PERMIT REQUIREMENT	******	******	**** ****	5.5 MINIMUM	******	9.5 MAXIMUM	SU		TWICE/WEEK	GRAB
SOLIDS, TOTAL SUSPENDED 00530 1 0 0 EFFLUENT GROSS VALUE	SAMPLE MEASUREMENT	5.296	11.064	(26)	******	35.4	66	(19)	0	1/7	Comp 24hr
	PERMIT REQUIREMENT	80 MO AVG	175 DAILY MX	LBS/DY	******	300 MO AVG	600 DAILY MX	MG/L		WEEKLY	COMP24
OIL & GREASE (FREON EXTR.-IR METH) TOT, RC 00560 1 0 0 EFFLUENT GROSS VALUE	SAMPLE MEASUREMENT	0.537	0.768	(01)	******	3.46	4.63	(19)	0	1/7	Grab
	PERMIT REQUIREMENT	REPORT MO AVG	29.2 DAILY MX	KG/DAY	******	REPORT MO AVG	100 DAILY MX	MG/L		WEEKLY	GRAB
PENTACHLOROPHENOL 39032 1 0 0 EFFLUENT GROSS VALUE	SAMPLE MEASUREMENT	0	0	(01)	******	0	0	(19)	0	1/7	Grab
	PERMIT REQUIREMENT	.053 MO AVG	.102 DAILY MX	KG/DAY	******	.10 MO AVG	.20 DAILY MX	MG/L		WEEKLY	GRAB
PHENOLS 46000 1 0 0 EFFLUENT GROSS VALUE	SAMPLE MEASUREMENT	0.00196	0.00787	(01)	******	0.012	0.04	(19)	0	1/7	Grab
	PERMIT REQUIREMENT	.32 MO AVG	1.15 DAILY MX	KG/DAY	******	3 MO AVG	5 DAILY MX	MG/L		WEEKLY	GRAB
FLOW, IN CONDUIT OR THRU TREATMENT PLANT 50050 1 0 0 EFFLUENT GROSS VALUE	SAMPLE MEASUREMENT	0.0201	0.0309	(03)	******	******	******			Daily	Conti.
	PERMIT REQUIREMENT	REPORT MO AVG	0.045 DAILY MX	MGD	******	******	******	**** ****		DAILY	CONTIN

NAME/TITLE PRINCIPAL EXECUTIVE OFFICER		TELEPHONE		DATE		
Thomas L. Henderson / Plant Manager		601	226-4584	99	2	16
TYPED OR PRINTED		AREA CODE	NUMBER	YEAR	MO	DAY

I CERTIFY UNDER PENALTY OF LAW THAT I HAVE PERSONALLY EXAMINED AND AM FAMILIAR WITH THE INFORMATION SUBMITTED HEREIN; AND BASED ON MY INQUIRY OF THOSE INDIVIDUALS IMMEDIATELY RESPONSIBLE FOR OBTAINING THE INFORMATION, I BELIEVE THE SUBMITTED INFORMATION IS TRUE, ACCURATE AND COMPLETE. I AM AWARE THAT THERE ARE SIGNIFICANT PENALTIES FOR SUBMITTING FALSE INFORMATION, INCLUDING THE POSSIBILITY OF FINE AND IMPRISONMENT. SEE 18 U.S.C. § 1001 AND 33 U.S.C. § 1319. *(Penalties under these statutes may include fines up to $10,000 and or maximum imprisonment of between 6 months and 5 years.)*

Thomas L. Henderson
SIGNATURE OF PRINCIPAL EXECUTIVE OFFICER OR AUTHORIZED AGENT

COMMENTS AND EXPLANATION OF ANY VIOLATIONS *(Reference all attachments here)*

PERMITTEE NAME/ADDRESS (Include Facility Name/ Location if Different)
NAME KOPPERS INDUSTRIES INC
ADDRESS P O BOX 160
TIE PLANT MS 38960

FACILITY
LOCATION
ATTN: MR. ~~RONALD MURPHEY~~ Thomas L. Henderson

NATIONAL POLLUTANT DISCHARGE ELIMINATION SYSTEM (NPDES)
DISCHARGE MONITORING REPORT (DMR)

(2-16)	(17-19)
MSP090300	001 A
PERMIT NUMBER	DISCHARGE NUMBER

MONITORING PERIOD

	YEAR	MO	DAY		YEAR	MO	DAY
FROM	98	12	01	TO	98	12	31
	(20-21)	(22-23)	(24-25)		(26-27)	(28-29)	(30-31)

Mass

TOTAL FACILITY DISCHARGE
(SUBR NO) 12345
F - FINAL
MINOR

Form Approved.
OMB No. 2040-0004
Approval expires 05-31-98

*** NO DISCHARGE |__| ***
NOTE: Read instructions before completing this form.

PARAMETER (32-37)		(3 Card Only) (46-53) QUANTITY OR LOADING AVERAGE	(54-61) MAXIMUM	UNITS	(4 Card Only) (38-45) QUANTITY OR CONCENTRATION MINIMUM	(46-53) AVERAGE	(54-61) MAXIMUM	UNITS	NO. EX (62-63)	FREQUENCY OF ANALYSIS (64-68)	SAMPLE TYPE (69-70)
BOD, 5-DAY (20 DEG. C) 00310 1 0 0 EFFLUENT GROSS VALUE	SAMPLE MEASUREMENT	0.210	0.433	(26)	******	1.936	4.95	(19)			
	PERMIT REQUIREMENT	70 MO AVG	140 DAILY MX	LBS/DY	******	240 MO AVG	480 DAILY MX	MG/L		WEEKLY	COMP24
P[illegible] 00400 1 0 0 EFFLUENT GROSS VALUE	SAMPLE MEASUREMENT	******	******		6.8	******	7.95	(12)			
	PERMIT REQUIREMENT	******	******	********	5.5 MINIMUM	******	9.5 MAXIMUM	SU		TWICE/WEEK	GRAB
SOLIDS, TOTAL SUSPENDED 00530 1 0 0 EFFLUENT GROSS VALUE	SAMPLE MEASUREMENT	4.949	8.359	(26)	******	33.4	45	(19)			
	PERMIT REQUIREMENT	88 MO AVG	175 DAILY MX	LBS/DY	******	300 MO AVG	600 DAILY MX	MG/L		WEEKLY	COMP24
OIL & GREASE (FREON EXTR.-IR METH) TOT, RC 00560 1 0 0 EFFLUENT GROSS VALUE	SAMPLE MEASUREMENT	0.453	1.009	(01)	******	2.906	4.55	(19)			
	PERMIT REQUIREMENT	REPORT MO AVG	29.2 DAILY MX	KG/DAY	******	REPORT MO AVG	100 DAILY MX	MG/L		WEEKLY	GRAB
PENTACHLOROPHENOL 39032 1 0 0 EFFLUENT GROSS VALUE	SAMPLE MEASUREMENT	0	0	(01)	******	0	0	(19)			
	PERMIT REQUIREMENT	.053 MO AVG	.102 DAILY MX	KG/DAY	******	.18 MO AVG	.36 DAILY MX	MG/L		WEEKLY	GRAB
P[illegible]NOLS 46000 1 0 0 EFFLUENT GROSS VALUE	SAMPLE MEASUREMENT	0.00394	0.00888	(01)	******	0.026	0.05	(19)			
	PERMIT REQUIREMENT	.88 MO AVG	1.75 DAILY MX	KG/DAY	******	3 MO AVG	6 DAILY MX	MG/L		WEEKLY	GRAB
FLOW, IN CONDUIT OR THRU TREATMENT PLANT 50050 1 0 0 EFFLUENT GROSS VALUE	SAMPLE MEASUREMENT	0.001238	0.0303	(03)	******	******	******				
	PERMIT REQUIREMENT	REPORT MO AVG	0.035 DAILY MX	MGD	******	******	******	********		DAILY	CONTIN

NAME/TITLE PRINCIPAL EXECUTIVE OFFICER
Thomas L. Henderson / Plant Manager
TYPED OR PRINTED

I CERTIFY UNDER PENALTY OF LAW THAT I HAVE PERSONALLY EXAMINED AND AM FAMILIAR WITH THE INFORMATION SUBMITTED HEREIN; AND BASED ON MY INQUIRY OF THOSE INDIVIDUALS IMMEDIATELY RESPONSIBLE FOR OBTAINING THE INFORMATION, I BELIEVE THE SUBMITTED INFORMATION IS TRUE, ACCURATE AND COMPLETE. I AM AWARE THAT THERE ARE SIGNIFICANT PENALTIES FOR SUBMITTING FALSE INFORMATION, INCLUDING THE POSSIBILITY OF FINE AND IMPRISONMENT. SEE 18 U.S.C. § 1001 AND 33 U.S.C. § 1319. (Penalties under these statutes may include fines up to $10,000 and or maximum imprisonment of between 6 months and 5 years.)

Thomas L. Henderson
SIGNATURE OF PRINCIPAL EXECUTIVE OFFICER OR AUTHORIZED AGENT

TELEPHONE		DATE		
601	226-4584	1	26	99
AREA CODE	NUMBER	YEAR	MO	DAY

COMMENTS AND EXPLANATION OF ANY VIOLATIONS (Reference all attachments here)

JAN 27 1999
DEQ-FCED

EPA Form 3320-1 (08-95) Previous editions may be used. (REPLACES EPA FORM T-40 WHICH MAY NOT BE USED.)

00273/980123-1017

PERMITTEE NAME/ADDRESS (Include Facility Name/Location if Different)
NAME KOPPERS INDUSTRIES INC
ADDRESS P O BOX 160
TIE PLANT MS 38960

NATIONAL POLLUTANT DISCHARGE ELIMINATION SYSTEM (NPDES)
DISCHARGE MONITORING REPORT (DMR)

Form Approved. OMB No. 2040-0004 Approval expires 05-31-98

(2-16) MSP090300 PERMIT NUMBER
(17-19) 001 A DISCHARGE NUMBER

TOTAL FACILITY DISCHARGE
(SUBR NO) 12345
F - FINAL
MINOR

FACILITY LOCATION ATTN: Thomas L. Henderson ~~MRS. ROBERT MURPHEY~~

MONITORING PERIOD

	YEAR	MO	DAY		YEAR	MO	DAY
FROM	98	11	01	TO	98	11	30
	(20-21)	(22-23)	(24-25)		(26-27)	(28-29)	(30-31)

*** NO DISCHARGE [ ] ***

NOTE: Read instructions before completing this form.

PARAMETER (32-37)		(3 Card Only) QUANTITY OR LOADING (46-53) AVERAGE	(54-61) MAXIMUM	UNITS	(4 Card Only) QUANTITY OR CONCENTRATION (38-45) MINIMUM	(46-53) AVERAGE	(54-61) MAXIMUM	UNITS	NO. EX (62-63)	FREQUENCY OF ANALYSIS (64-68)	SAMPLE TYPE (69-70)
BOD, 5-DAY (20 DEG. C) 00310 1 0 0 EFFLUENT GROSS VALUE	SAMPLE MEASUREMENT	0.089	0.357	(26)	******	0.5	2	(19)			
	PERMIT REQUIREMENT	70 MO AVG	140 DAILY MX	LBS/DY	******	240 MO AVG	480 DAILY MX	MG/L		WEEKLY	COMP24
PH 00400 1 0 0 EFFLUENT GROSS VALUE	SAMPLE MEASUREMENT	******	******		6.56	******	7.45	(12)			
	PERMIT REQUIREMENT	******	******	**** ****	6.5 MINIMUM	******	9.5 MAXIMUM	SU		TWICE/WEEK	GRAB
SOLIDS, TOTAL SUSPENDED 00530 1 0 0 EFFLUENT GROSS VALUE	SAMPLE MEASUREMENT	1.520	2.973	(26)	******	23	31	(19)			
	PERMIT REQUIREMENT	88 MO AVG	175 DAILY MX	LBS/DY	******	300 MO AVG	600 DAILY MX	MG/L		WEEKLY	COMP24
OIL & GREASE (FREON EXTR.-IR METH)TOT,RC 00560 1 0 0 EFFLUENT GROSS VALUE	SAMPLE MEASUREMENT	0.118	0.213	(01)	******	1.9675	2.44	(19)			
	PERMIT REQUIREMENT	REPORT MO AVG	29.2 DAILY MX	KG/DAY	******	REPORT MO AVG	100 DAILY MX	MG/L		WEEKLY	GRAB
PENTACHLOROPHENOL 39032 1 0 0 EFFLUENT GROSS VALUE	SAMPLE MEASUREMENT	0	0	(01)	******	0	0	(19)			
	PERMIT REQUIREMENT	.053 MO AVG	.102 DAILY MX	KG/DAY	******	.18 MO AVG	.36 DAILY MX	MG/L		WEEKLY	GRAB
PHENOLS 46000 1 0 0 EFFLUENT GROSS VALUE	SAMPLE MEASUREMENT	0	0	(01)	******	0	0	(19)			
	PERMIT REQUIREMENT	.88 MO AVG	1.75 DAILY MX	KG/DAY	******	3 MO AVG	6 DAILY MX	MG/L		WEEKLY	GRAB
FLOW, IN CONDUIT OR THRU TREATMENT PLANT 50050 1 0 0 EFFLUENT GROSS VALUE	SAMPLE MEASUREMENT	0.013067	.021400	(03)	******	******	******				
	PERMIT REQUIREMENT	REPORT MO AVG	0.035 DAILY MX	MGD	******	******	******	**** ****		DAILY	CONTIN

NAME/TITLE PRINCIPAL EXECUTIVE OFFICER: Thomas L. Henderson / Plant Manager
TYPED OR PRINTED

I CERTIFY UNDER PENALTY OF LAW THAT I HAVE PERSONALLY EXAMINED AND AM FAMILIAR WITH THE INFORMATION SUBMITTED HEREIN; AND BASED ON MY INQUIRY OF THOSE INDIVIDUALS IMMEDIATELY RESPONSIBLE FOR OBTAINING THE INFORMATION, I BELIEVE THE SUBMITTED INFORMATION IS TRUE, ACCURATE AND COMPLETE. I AM AWARE THAT THERE ARE SIGNIFICANT PENALTIES FOR SUBMITTING FALSE INFORMATION, INCLUDING THE POSSIBILITY OF FINE AND IMPRISONMENT. SEE 18 U.S.C. § 1001 AND 33 U.S.C. § 1319. (Penalties under these statutes may include fines up to $10,000 and or maximum imprisonment of between 6 months and 5 years.)

Thomas L. Henderson
SIGNATURE OF PRINCIPAL EXECUTIVE OFFICER OR AUTHORIZED AGENT

TELEPHONE AREA CODE	NUMBER	DATE YEAR	MO	DAY
601	226-4584	98	12	22

COMMENTS AND EXPLANATION OF ANY VIOLATIONS (Reference all attachments here)

JAN 11 1999
DEQ-ECED

EPA Form 3320-1 (08-95) Previous editions may be used. (REPLACES EPA FORM T-40 WHICH MAY NOT BE USED.)

00272/980123-1017

PERMITTEE NAME/ADDRESS *(Include Facility Name/ Location if Different)*

NAME KOPPERS INDUSTRIES INC

ADDRESS P O BOX 160
TIE PLANT MS 38960

FACILITY LOCATION Thomas L. Henderson

ATTN: ~~MR. RONALD MURPHEY~~

NATIONAL POLLUTANT DISCHARGE ELIMINATION SYSTEM *(NPDES)*
DISCHARGE MONITORING REPORT *(DMR)*

(2-16)	(17-19)
MSP090300	001 A
PERMIT NUMBER	DISCHARGE NUMBER

TOTAL FACILITY DISCHARGE
(SUBR NO) 12345
F - FINAL
MINOR

Form Approved.
OMB No. 2040-0004
Approval expires 05-31-98

MONITORING PERIOD	YEAR	MO	DAY		YEAR	MO	DAY
FROM	98	10	01	TO	98	10	31
	(20-21)	(22-23)	(24-25)		(26-27)	(28-29)	(30-31)

*** NO DISCHARGE [__] ***

NOTE: Read instructions before completing this form.

PARAMETER (32-37)		(3 Card Only) QUANTITY OR LOADING (46-53) AVERAGE	(54-61) MAXIMUM	UNITS	(4 Card Only) QUANTITY OR CONCENTRATION (38-45) MINIMUM	(46-53) AVERAGE	(54-61) MAXIMUM	UNITS	NO. EX (62-63)	FREQUENCY OF ANALYSIS (64-68)	SAMPLE TYPE (69-70)
BOD, 5-DAY (20 DEG. C)	SAMPLE MEASUREMENT	.157	.321	(26)	******	1.5	3	(19)	0	1/7	24HC
00310 1 0 0 EFFLUENT GROSS VALUE	PERMIT REQUIREMENT	70 MO AVG	140 DAILY MX	LBS/DY	******	240 MO AVG	480 DAILY MX	MG/L		WEEKLY	COMP24
	SAMPLE MEASUREMENT	******	******		7.25	******	7.93	(12)	0	2/7	GRAB
00400 1 0 0 EFFLUENT GROSS VALUE	PERMIT REQUIREMENT	******	******	**** ****	5.5 MINIMUM	******	9.5 MAXIMUM	SU		TWICE/WEEK	GRAB
SOLIDS, TOTAL SUSPENDED	SAMPLE MEASUREMENT	3.334	10.358	(26)	******	41	108	(19)	0	1/7	GRAB
00530 1 0 0 EFFLUENT GROSS VALUE	PERMIT REQUIREMENT	88 MO AVG	175 DAILY MX	LBS/DY	******	300 MO AVG	600 DAILY MX	MG/L		WEEKLY	COMP24
OIL & GREASE (FREON EXTR.-IR METH) TOT, RC	SAMPLE MEASUREMENT	.223	.582	(01)	******	2.53	3.26	(19)	0	1/7	GRAB
00560 1 0 0 EFFLUENT GROSS VALUE	PERMIT REQUIREMENT	REPORT MO AVG	29.2 DAILY MX	KG/DAY	******	REPORT MO AVG	100 DAILY MX	MG/L		WEEKLY	GRAB
PENTACHLOROPHENOL	SAMPLE MEASUREMENT	.00002	.00008	(01)	******	.00125	.005	(19)	0	1/7	GRAB
39032 1 0 0 EFFLUENT GROSS VALUE	PERMIT REQUIREMENT	.053 MO AVG	.102 DAILY MX	KG/DAY	******	.18 MO AVG	.36 DAILY MX	MG/L		WEEKLY	GRAB
PHENOLS	SAMPLE MEASUREMENT	0	0	(01)	******	0	0	(19)	0	1/7	GRAB
32000 1 0 0 EFFLUENT GROSS VALUE	PERMIT REQUIREMENT	.88 MO AVG	1.75 DAILY MX	KG/DAY	******	3 MO AVG	6 DAILY MX	MG/L		WEEKLY	GRAB
FLOW, IN CONDUIT OR THRU TREATMENT PLANT	SAMPLE MEASUREMENT	.009287	.0214	(03)	******	******	******		0	CONT	N/A
50050 1 0 0 EFFLUENT GROSS VALUE	PERMIT REQUIREMENT	REPORT MO AVG	0.035 DAILY MX	MGD	******	******	******	**** ****		DAILY	CONTIN

NAME/TITLE PRINCIPAL EXECUTIVE OFFICER			TELEPHONE		DATE		
Thomas L. Henderson	I CERTIFY UNDER PENALTY OF LAW THAT I HAVE PERSONALLY EXAMINED AND AM FAMILIAR WITH THE INFORMATION SUBMITTED HEREIN; AND BASED ON MY INQUIRY OF THOSE INDIVIDUALS IMMEDIATELY RESPONSIBLE FOR OBTAINING THE INFORMATION, I BELIEVE THE SUBMITTED INFORMATION IS TRUE, ACCURATE AND COMPLETE. I AM AWARE THAT THERE ARE SIGNIFICANT PENALTIES FOR SUBMITTING FALSE INFORMATION, INCLUDING THE POSSIBILITY OF FINE AND IMPRISONMENT. SEE 18 U.S.C. § 1001 AND 33 U.S.C. § 1319. *(Penalties under these statutes may include fines up to $10,000 and or maximum imprisonment of between 6 months and 5 years.)*	Thomas L. Henderson	601	226-4584	98	11	
TYPED OR PRINTED		SIGNATURE OF PRINCIPAL EXECUTIVE OFFICER OR AUTHORIZED AGENT	AREA CODE	NUMBER	YEAR	MO	DAY

COMMENTS AND EXPLANATION OF ANY VIOLATIONS *(Reference all attachments here)*

PERMITTEE NAME/ADDRESS (Include Facility Name/Location if Different)
NAME KOPPERS INDUSTRIES INC
ADDRESS P O BOX 160
TIE PLANT MS 38960

NATIONAL POLLUTANT DISCHARGE ELIMINATION SYSTEM (NPDES)
DISCHARGE MONITORING REPORT (DMR)

Form Approved. OMB No. 2040-0004 Approval expires 05-31-98

GRENADA
TOTAL FACILITY DISCHARGE
(SUBR NO) 12345
F - FINAL
MINOR

RT

PERMIT NUMBER (2-16)	DISCHARGE NUMBER (17-19)
MSP090300	001 A

MONITORING PERIOD	YEAR	MO	DAY		YEAR	MO	DAY
FROM	98	09	01	TO	98	09	30
	(20-21)	(22-23)	(24-25)		(26-27)	(28-29)	(30-31)

*** NO DISCHARGE [__] ***

NOTE: Read instructions before completing this form.

FACILITY LOCATION ATTN: Thomas L. Henderson ~~MR. RONALD MURPHEY~~

PARAMETER (32-37)		QUANTITY OR LOADING (3 Card Only) (46-53) AVERAGE	(54-61) MAXIMUM	UNITS	QUANTITY OR CONCENTRATION (4 Card Only) (38-45) MINIMUM	(46-53) AVERAGE	(54-61) MAXIMUM	UNITS	NO. EX (62-63)	FREQUENCY OF ANALYSIS (64-68)	SAMPLE TYPE (69-70)
BOD, 5-DAY (20 DEG. C) 00310 1 0 0 EFFLUENT GROSS VALUE	SAMPLE MEASUREMENT	.065	.230	(26)	******	1.41	3	(19)	0	1/7	24 HC
	PERMIT REQUIREMENT	70 MO AVG	140 DAILY MX	LBS/DY	******	240 MO AVG	480 DAILY MX	MG/L		WEEKLY	COMP24
00400 1 0 0 EFFLUENT GROSS VALUE	SAMPLE MEASUREMENT	******	******		7.2	******	7.95	(12)	0	2/7	GRAB
	PERMIT REQUIREMENT	******	******	********	5.5 MINIMUM	******	9.5 MAXIMUM	SU		TWICE/WEEK	GRAB
SOLIDS, TOTAL SUSPENDED 00530 1 0 0 EFFLUENT GROSS VALUE	SAMPLE MEASUREMENT	1.264	3.344	(26)	******	15	24	(19)	0	1/7	24 HC
	PERMIT REQUIREMENT	88 MO AVG	175 DAILY MX	LBS/DY	******	300 MO AVG	600 DAILY MX	MG/L		WEEKLY	COMP24
OIL & GREASE (FREON EXTR.-IR METH) TOT. RC 00560 1 0 0 EFFLUENT GROSS VALUE	SAMPLE MEASUREMENT	.377	.736	(01)	******	4.066	4.9	(19)	0	1/7	GRAB
	PERMIT REQUIREMENT	REPORT MO AVG	29.2 DAILY MX	KG/DAY	******	REPORT MO AVG	100 DAILY MX	MG/L		WEEKLY	GRAB
PENTACHLOROPHENOL 39032 1 0 0 EFFLUENT GROSS VALUE	SAMPLE MEASUREMENT	.00111	.003	(01)	******	.0088	.02	(19)	0	1/7	GRAB
	PERMIT REQUIREMENT	.053 MO AVG	.102 DAILY MX	KG/DAY	******	.18 MO AVG	.36 DAILY MX	MG/L		WEEKLY	GRAB
PHENOLS 34000 1 0 0 EFFLUENT GROSS VALUE	SAMPLE MEASUREMENT	.00106	.003	(01)	******	.0066	.02	(19)	0	1/7	GRAB
	PERMIT REQUIREMENT	.88 MO AVG	1.75 DAILY MX	KG/DAY	******	3 MO AVG	6 DAILY MX	MG/L		WEEKLY	GRAB
FLOW, IN CONDUIT OR THRU TREATMENT PLANT 50050 1 0 0 EFFLUENT GROSS VALUE	SAMPLE MEASUREMENT	.010373	.0214	(03)	******	******	******		0	CONT	N/A
	PERMIT REQUIREMENT	REPORT MO AVG	0.035 DAILY MX	MGD	******	******	******	********		DAILY	CONTIN

NAME/TITLE PRINCIPAL EXECUTIVE OFFICER: Thomas L. Henderson
TYPED OR PRINTED

I CERTIFY UNDER PENALTY OF LAW THAT I HAVE PERSONALLY EXAMINED AND AM FAMILIAR WITH THE INFORMATION SUBMITTED HEREIN; AND BASED ON MY INQUIRY OF THOSE INDIVIDUALS IMMEDIATELY RESPONSIBLE FOR OBTAINING THE INFORMATION, I BELIEVE THE SUBMITTED INFORMATION IS TRUE, ACCURATE AND COMPLETE. I AM AWARE THAT THERE ARE SIGNIFICANT PENALTIES FOR SUBMITTING FALSE INFORMATION, INCLUDING THE POSSIBILITY OF FINE AND IMPRISONMENT. SEE 18 U.S.C. § 1001 AND 33 U.S.C. § 1319. (Penalties under these statutes may include fines up to $10,000 and or maximum imprisonment of between 6 months and 5 years.)

Thomas L. Henderson
SIGNATURE OF PRINCIPAL EXECUTIVE OFFICER OR AUTHORIZED AGENT

TELEPHONE AREA CODE	NUMBER	DATE YEAR	MO	DAY
601	226-4584	98	10	27

COMMENTS AND EXPLANATION OF ANY VIOLATIONS (Reference all attachments here)

PERMITTEE NAME/ADDRESS (Include Facility Name/Location if Different)
NAME KOPPERS INDUSTRIES INC
ADDRESS P O BOX 160
TIE PLANT MS 38960

NATIONAL POLLUTANT DISCHARGE ELIMINATION SYSTEM (NPDES)
DISCHARGE MONITORING REPORT (DMR)

(2-16)	(17-19)
MSP090300	001 A
PERMIT NUMBER	DISCHARGE NUMBER

Form Approved.
OMB No. 2040-0004
Approval expires 05-31-98

TOTAL FACILITY DISCHARGE
(SUBR NO) 12345
F - FINAL
MINOR

FACILITY LOCATION
ATTN: MR. Thomas L. Henderson ~~RONALD HURFREY~~

MONITORING PERIOD

	YEAR	MO	DAY		YEAR	MO	DAY
FROM	98	08	01	TO	98	08	31
	(20-21)	(22-23)	(24-25)		(26-27)	(28-29)	(30-31)

*** NO DISCHARGE |__| ***

NOTE: Read instructions before completing this form.

PARAMETER (32-37)		(3 Card Only) (46-53) QUANTITY OR LOADING AVERAGE	(54-61) MAXIMUM	UNITS	(4 Card Only) (38-45) QUANTITY OR CONCENTRATION MINIMUM	(46-53) AVERAGE	(54-61) MAXIMUM	UNITS	NO. EX (62-63)	FREQUENCY OF ANALYSIS (64-68)	SAMPLE TYPE (69-70)
BOD, 5-DAY (20 DEG. C)	SAMPLE MEASUREMENT	.407	.717	(26)	******	2.5	4.8	(19)	0		
00310 1 0 0 EFFLUENT GROSS VALUE	PERMIT REQUIREMENT	70 MO AVG	140 DAILY MX	LBS/DY	******	240 MO AVG	480 DAILY MX	MG/L		WEEKLY	COMP24
P	SAMPLE MEASUREMENT	******	******		6.95	******	8.3	(12)	0		
00400 1 0 0 EFFLUENT GROSS VALUE	PERMIT REQUIREMENT	******	******	**** ****	5.5 MINIMUM	******	9.5 MAXIMUM	SU		TWICE/WEEK	GRAB
SOLIDS, TOTAL SUSPENDED	SAMPLE MEASUREMENT	4.04	10.75	(26)	******	30.67	72	(19)	0		
00530 1 0 0 EFFLUENT GROSS VALUE	PERMIT REQUIREMENT	88 MO AVG	175 DAILY MX	LBS/DY	******	300 MO AVG	600 DAILY MX	MG/L		WEEKLY	COMP24
OIL & GREASE (FREON EXTR.-IR METH) TOT, P.C	SAMPLE MEASUREMENT	.394	.579	(01)	******	3.29	3.66	(19)	0		
00560 1 0 0 EFFLUENT GROSS VALUE	PERMIT REQUIREMENT	REPORT MO AVG	29.2 DAILY MX	KG/DAY	******	REPORT MO AVG	100 DAILY MX	MG/L		WEEKLY	GRAB
PENTACHLOROPHENOL	SAMPLE MEASUREMENT	.00193	.0056	(01)	******	.02	.03	(19)	0		
39032 1 0 0 EFFLUENT GROSS VALUE	PERMIT REQUIREMENT	.053 MO AVG	.102 DAILY MX	KG/DAY	******	.18 MO AVG	.36 DAILY MX	MG/L		WEEKLY	GRAB
PHENOLS	SAMPLE MEASUREMENT	.00187	.0056	(01)	******	.01	.03	(19)	0		
34000 1 0 0 EFFLUENT GROSS VALUE	PERMIT REQUIREMENT	.88 MO AVG	1.75 DAILY MX	KG/DAY	******	3 MO AVG	6 DAILY MX	MG/L		WEEKLY	GRAB
FLOW, IN CONDUIT OR THRU TREATMENT PLANT	SAMPLE MEASUREMENT	.01112	.0254	(03)	******	******	******		0		
50050 1 0 0 EFFLUENT GROSS VALUE	PERMIT REQUIREMENT	REPORT MO AVG	0.035 DAILY MX	MGD	******	******	******	**** ****		DAILY	CONTIN

NAME/TITLE PRINCIPAL EXECUTIVE OFFICER		TELEPHONE		DATE		
Thomas L. Henderson	I CERTIFY UNDER PENALTY OF LAW THAT I HAVE PERSONALLY EXAMINED AND AM FAMILIAR WITH THE INFORMATION SUBMITTED HEREIN; AND BASED ON MY INQUIRY OF THOSE INDIVIDUALS IMMEDIATELY RESPONSIBLE FOR OBTAINING THE INFORMATION, I BELIEVE THE SUBMITTED INFORMATION IS TRUE, ACCURATE AND COMPLETE. I AM AWARE THAT THERE ARE SIGNIFICANT PENALTIES FOR SUBMITTING FALSE INFORMATION, INCLUDING THE POSSIBILITY OF FINE AND IMPRISONMENT. SEE 18 U.S.C. § 1001 AND 33 U.S.C. § 1319. (Penalties under these statutes may include fines up to $10,000 and or maximum imprisonment of between 6 months and 5 years.)	Thomas L. Henderson	601 226-4584				
TYPED OR PRINTED		SIGNATURE OF PRINCIPAL EXECUTIVE OFFICER OR AUTHORIZED AGENT	AREA CODE	NUMBER	YEAR	MO	DAY

COMMENTS AND EXPLANATION OF ANY VIOLATIONS (Reference all attachments here)

PERMITTEE NAME/ADDRESS (Include Facility Name/ Location if Different)
NAME KOPPERS INDUSTRIES INC
ADDRESS P O BOX 160
TIE PLANT MS 38960

FACILITY
LOCATION
ATTN: MR. RONALD MURPHEY

NATIONAL POLLUTANT DISCHARGE ELIMINATION SYSTEM (NPDES)
DISCHARGE MONITORING REPORT (DMR)

(2-16)	(17-19)
MSP090300	001 A
PERMIT NUMBER	DISCHARGE NUMBER

TOTAL FACILITY DISCHARGE
(SUBR NO) 12345
F - FINAL
MINOR

Form Approved. OMB No. 2040-0004. Approval expires 05-31-98

MONITORING PERIOD	YEAR	MO	DAY		YEAR	MO	DAY
FROM	98	07	01	TO	98	07	31
	(20-21)	(22-23)	(24-25)		(26-27)	(28-29)	(30-31)

*** NO DISCHARGE |__| ***

NOTE: Read Instructions before completing this form.

PARAMETER (32-37)		QUANTITY OR LOADING (3 Card Only) (46-53) AVERAGE	(54-61) MAXIMUM	UNITS	QUANTITY OR CONCENTRATION (4 Card Only) (38-45) MINIMUM	(46-53) AVERAGE	(54-61) MAXIMUM	UNITS	NO. EX (62-63)	FREQUENCY OF ANALYSIS (64-68)	SAMPLE TYPE (69-70)
BOD, 5-DAY (20 DEG. C)	SAMPLE MEASUREMENT	3.291	12.250	(26)	******	35.175	108	(19)	0		
00310 1 0 0 EFFLUENT GROSS VALUE	PERMIT REQUIREMENT	70 MO AVG	140 DAILY MX	LBS/DY	******	240 MO AVG	480 DAILY MX	MG/L		WEEKLY	COMP24
	SAMPLE MEASUREMENT	******	******		6.7	******	7.95	(12)	0		
00400 1 0 0 EFFLUENT GROSS VALUE	PERMIT REQUIREMENT	******	******	**** ****	5.5 MINIMUM	******	9.5 MAXIMUM	SU		THICE/WEEK	GRAB
SOLIDS, TOTAL SUSPENDED	SAMPLE MEASUREMENT	2.248	4.919	(26)	******	86.25	198	(19)	0		
00530 1 0 0 EFFLUENT GROSS VALUE	PERMIT REQUIREMENT	88 MO AVG	175 DAILY MX	LBS/DY	******	300 MO AVG	600 DAILY MX	MG/L		WEEKLY	COMP24
OIL & GREASE (FREON EXTR.-IR METH) TOT, RC	SAMPLE MEASUREMENT	.591	1.531	(01)	******	11.52	14.7	(19)	0		
00560 1 0 0 EFFLUENT GROSS VALUE	PERMIT REQUIREMENT	REPORT MO AVG	29.2 DAILY MX	KG/ DAY	******	REPORT MO AVG	100 DAILY MX	MG/L		WEEKLY	GRAB
PENTACHLOROPHENOL	SAMPLE MEASUREMENT	.03531	.08110	(01)	******	1.16875	2.9	(19)	2		
39032 1 0 0 EFFLUENT GROSS VALUE	PERMIT REQUIREMENT	.053 MO AVG	.102 DAILY MX	KG/ DAY	******	.18 MO AVG	.36 DAILY MX	MG/L		WEEKLY	GRAB
PHENOLS	SAMPLE MEASUREMENT	.0056 ~~.1365~~	~~.196~~ .02121	(01)	******	.1365	.196	(19)	0		
46000 1 0 0 EFFLUENT GROSS VALUE	PERMIT REQUIREMENT	.88 MO AVG	1.75 DAILY MX	KG/ DAY	******	3 MO AVG	6 DAILY MX	MG/L		WEEKLY	GRAB
FLOW, IN CONDUIT OR THRU TREATMENT PLANT	SAMPLE MEASUREMENT			(03)	******	******	******				
50050 1 0 0 EFFLUENT GROSS VALUE	PERMIT REQUIREMENT	REPORT MO AVG	0.035 DAILY MX	MGD	******	******	******	*** ****		DAILY	CONTIN

NAME/TITLE PRINCIPAL EXECUTIVE OFFICER		TELEPHONE		DATE		
Thomas C. Henderson	I CERTIFY UNDER PENALTY OF LAW THAT I HAVE PERSONALLY EXAMINED AND AM FAMILIAR WITH THE INFORMATION SUBMITTED HEREIN; AND BASED ON MY INQUIRY OF THOSE INDIVIDUALS IMMEDIATELY RESPONSIBLE FOR OBTAINING THE INFORMATION, I BELIEVE THE SUBMITTED INFORMATION IS TRUE, ACCURATE AND COMPLETE. I AM AWARE THAT THERE ARE SIGNIFICANT PENALTIES FOR SUBMITTING FALSE INFORMATION, INCLUDING THE POSSIBILITY OF FINE AND IMPRISONMENT. SEE 18 U.S.C. § 1001 AND 33 U.S.C. § 1319. (Penalties under these statutes may include fines up to $10,000 and or maximum imprisonment of between 6 months and 5 years.)	Thomas C. Henderson	601	226-4584	98	8	27
TYPED OR PRINTED		SIGNATURE OF PRINCIPAL EXECUTIVE OFFICER OR AUTHORIZED AGENT	AREA CODE	NUMBER	YEAR	MO	DAY

COMMENTS AND EXPLANATION OF ANY VIOLATIONS (Reference all attachments here)

PERMITTEE NAME/ADDRESS (Include Facility Name/Location if Different)
NAME KOPPERS INDUSTRIES INC
ADDRESS P O BOX 160
TIE PLANT MS 38960

NATIONAL POLLUTANT DISCHARGE ELIMINATION SYSTEM (NPDES)
DISCHARGE MONITORING REPORT (DMR)

Form Approved.
OMB No. 2040-0004
Approval expires 05-31-98

PERMIT NUMBER (2-16)	DISCHARGE NUMBER (17-19)
MSP090300	001 Y

TOTAL FACILITY DISCHARGE
(SUBR NO) 12545
F - FINAL
MINOR

FACILITY LOCATION
ATTN: Thomas L. Henderson

MONITORING PERIOD	YEAR	MO	DAY		YEAR	MO	DAY
FROM	98	07	01	TO	98	12	31
	(20-21)	(22-23)	(24-25)		(26-27)	(28-29)	(30-31)

*** NO DISCHARGE [ ] ***

NOTE: Read Instructions before completing this form.

PARAMETER (32-37)		(3 Card Only) QUANTITY OR LOADING (46-53) AVERAGE	(54-61) MAXIMUM	UNITS	(4 Card Only) QUANTITY OR CONCENTRATION (38-45) MINIMUM	(46-53) AVERAGE	(54-61) MAXIMUM	UNITS	NO. EX (62-63)	FREQUENCY OF ANALYSIS (64-68)	SAMPLE TYPE (69-70)
ARSENIC, TOTAL RECOVERABLE 00978 1 0 0 EFFLUENT GROSS VALUE	SAMPLE MEASUREMENT	0	0	(26)	******	0	0	(19)			
	PERMIT REQUIREMENT	REPORT ANNL AVG	0.131 ANNL MAX	LBS/DY	******	REPORT ANNL AVG	.45 ANNL MAX	MG/L		SEMI-ANNUAL	COMP24
CHROMIUM TOTAL RECOVERABLE 01118 1 0 0 EFFLUENT GROSS VALUE	SAMPLE MEASUREMENT	.00384	.00384	(26)	******	.004	.004	(19)			
	PERMIT REQUIREMENT	REPORT ANNL AVG	1.168 ANNL MAX	LBS/DY	******	REPORT ANNL AVG	4.0 ANNL MAX	MG/L		SEMI-ANNUAL	COMP24
COPPER TOTAL RECOVERABLE 01119 1 0 0 EFFLUENT GROSS VALUE	SAMPLE MEASUREMENT	.00076	.00076	(26)	******	.008	.008	(19)			
	PERMIT REQUIREMENT	REPORT ANNL AVG	0.642 ANNL MAX	LBS/DY	******	REPORT ANNL AVG	2.2 ANNL MAX	MG/L		SEMI-ANNUAL	COMP24
	SAMPLE MEASUREMENT										
	PERMIT REQUIREMENT										
	SAMPLE MEASUREMENT										
	PERMIT REQUIREMENT										
	SAMPLE MEASUREMENT										
	PERMIT REQUIREMENT										
	SAMPLE MEASUREMENT										
	PERMIT REQUIREMENT										

NAME/TITLE PRINCIPAL EXECUTIVE OFFICER

Thomas L. Henderson / Plant Manager
TYPED OR PRINTED

I CERTIFY UNDER PENALTY OF LAW THAT I HAVE PERSONALLY EXAMINED AND AM FAMILIAR WITH THE INFORMATION SUBMITTED HEREIN; AND BASED ON MY INQUIRY OF THOSE INDIVIDUALS IMMEDIATELY RESPONSIBLE FOR OBTAINING THE INFORMATION, I BELIEVE THE SUBMITTED INFORMATION IS TRUE, ACCURATE AND COMPLETE. I AM AWARE THAT THERE ARE SIGNIFICANT PENALTIES FOR SUBMITTING FALSE INFORMATION, INCLUDING THE POSSIBILITY OF FINE AND IMPRISONMENT. SEE 18 U.S.C. § 1001 AND 33 U.S.C. § 1319. *(Penalties under these statutes may include fines up to $10,000 and or maximum imprisonment of between 6 months and 5 years.)*

Thomas L. Henderson
SIGNATURE OF PRINCIPAL EXECUTIVE OFFICER OR AUTHORIZED AGENT

TELEPHONE		DATE		
601	226-4584	98	12	22
AREA CODE	NUMBER	YEAR	MO	DAY

COMMENTS AND EXPLANATION OF ANY VIOLATIONS *(Reference all attachments here)*

DEC 2 8 1998

PERMITTEE NAME/ADDRESS (Include Facility Name/ Location if Different)

NAME KOPPERS INDUSTRIES INC

ADDRESS P O BOX 160
TIE PLANT MS 38960

FACILITY
LOCATION
ATTN: MR. RONALD MURPHEY

NATIONAL POLLUTANT DISCHARGE ELIMINATION SYSTEM (NPDES)
DISCHARGE MONITORING REPORT (DMR)
(2-16) (17-19)

MSP090300 — PERMIT NUMBER

001 A — DISCHARGE NUMBER

GRENADA

TOTAL FACILITY DISCHARGE
(SUBR NO) 12345
F - FINAL
MINOR

Form Approved.
OMB No. 2040-0004
Approval expires 05-31-98

MONITORING PERIOD	YEAR	MO	DAY		YEAR	MO	DAY
FROM	98	06	01	TO	98	06	30
	(20-21)	(22-23)	(24-25)		(26-27)	(28-29)	(30-31)

*** NO DISCHARGE [ ] ***

NOTE: Read instructions before completing this form.

PARAMETER (32-37)		(3 Card Only) (46-53) QUANTITY OR LOADING (54-61) AVERAGE	MAXIMUM	UNITS	(4 Card Only) (38-45) QUANTITY OR CONCENTRATION (46-53) MINIMUM	(54-61) AVERAGE	MAXIMUM	UNITS	NO. EX (62-63)	FREQUENCY OF ANALYSIS (64-68)	SAMPLE TYPE (69-70)
BOD, 5-DAY (20 DEG. C) 00310 1 0 0 EFFLUENT GROSS VALUE	SAMPLE MEASUREMENT	.361	.866	(26)	******	3.375	6	(19)	0		
	PERMIT REQUIREMENT	70 MO AVG	140 DAILY MX	LBS/DY	******	240 MO AVG	480 DAILY MX	MG/L		WEEKLY	COMP24
PH 00400 1 0 0 EFFLUENT GROSS VALUE	SAMPLE MEASUREMENT	******	******		7.35	******	7.90	(12)	0		
	PERMIT REQUIREMENT	******	******	********	5.5 MINIMUM	******	9.5 MAXIMUM	SU		TWICE/WEEK	GRAB
SOLIDS, TOTAL SUSPENDED 00530 1 0 0 EFFLUENT GROSS VALUE	SAMPLE MEASUREMENT	4.722	12.697	(26)	******	39.25	88	(19)	0		
	PERMIT REQUIREMENT	88 MO AVG	175 DAILY MX	LBS/DY	******	300 MO AVG	600 DAILY MX	MG/L		WEEKLY	COMP24
OIL & GREASE (FREON EXTR.-IR METH) TOT, RC 00560 1 0 0 EFFLUENT GROSS VALUE	SAMPLE MEASUREMENT	.345	.433	(01) LBS	******	3.37	3.33	(19)	0		
	PERMIT REQUIREMENT	REPORT MO AVG	29.2 DAILY MX	~~KG~~/DAY	******	REPORT MO AVG	100 DAILY MX	MG/L		WEEKLY	GRAB
PENTACHLOROPHENOL 39032 1 0 0 EFFLUENT GROSS VALUE	SAMPLE MEASUREMENT	0	0	(01) LBS	******	0	0	(19)	0		
	PERMIT REQUIREMENT	.053 MO AVG	.102 DAILY MX	~~KG~~/DAY	******	.18 MO AVG	.36 DAILY MX	MG/L		WEEKLY	GRAB
PHENOLS 48000 1 0 0 EFFLUENT GROSS VALUE	SAMPLE MEASUREMENT	.00475	.00649	(01) LBS	******	.043	.052	(19)	0		
	PERMIT REQUIREMENT	.88 MO AVG	1.75 DAILY MX	~~KG~~/DAY	******	3 MO AVG	6 DAILY MX	MG/L		WEEKLY	GRAB
FLOW, IN CONDUIT OR THRU TREATMENT PLANT 50050 1 0 0 EFFLUENT GROSS VALUE	SAMPLE MEASUREMENT	11450	.0288	(03)	******	******	******				
	PERMIT REQUIREMENT	REPORT MO AVG	0.035 DAILY MX	MGD	******	******	******	********		DAILY	CONTIN

NAME/TITLE PRINCIPAL EXECUTIVE OFFICER

Thomas L. Henderson
TYPED OR PRINTED

I CERTIFY UNDER PENALTY OF LAW THAT I HAVE PERSONALLY EXAMINED AND AM FAMILIAR WITH THE INFORMATION SUBMITTED HEREIN; AND BASED ON MY INQUIRY OF THOSE INDIVIDUALS IMMEDIATELY RESPONSIBLE FOR OBTAINING THE INFORMATION, I BELIEVE THE SUBMITTED INFORMATION IS TRUE, ACCURATE AND COMPLETE. I AM AWARE THAT THERE ARE SIGNIFICANT PENALTIES FOR SUBMITTING FALSE INFORMATION, INCLUDING THE POSSIBILITY OF FINE AND IMPRISONMENT. SEE 18 U.S.C. § 1001 AND 33 U.S.C. § 1319. *(Penalties under these statutes may include fines up to $10,000 and or maximum imprisonment of between 6 months and 5 years.)*

Thomas L. Henderson
SIGNATURE OF PRINCIPAL EXECUTIVE OFFICER OR AUTHORIZED AGENT

TELEPHONE		DATE		
601	226-4584	98	07	23
AREA CODE	NUMBER	YEAR	MO	DAY

COMMENTS AND EXPLANATION OF ANY VIOLATIONS *(Reference all attachments here)*

PERMITTEE NAME/ADDRESS (Include Facility Name/Location if Different)
NAME KOPPERS INDUSTRIES INC
ADDRESS P O BOX 160
TIE PLANT MS 38960

FACILITY
LOCATION
ATTN: MR. RONALD MURPHEY

NATIONAL POLLUTANT DISCHARGE ELIMINATION SYSTEM (NPDES)
DISCHARGE MONITORING REPORT (DMR)

(2-16)	(17-19)
MSP090300	001 A
PERMIT NUMBER	DISCHARGE NUMBER

MONITORING PERIOD

	YEAR	MO	DAY		YEAR	MO	DAY
FROM	98	05	01	TO	98	05	31
	(20-21)	(22-23)	(24-25)		(26-27)	(28-29)	(30-31)

GREENVILLE

TOTAL FACILITY DISCHARGE
(SUBR NO) 12345
F - FINAL
MINOR

*** NO DISCHARGE [ ] ***

Form Approved. OMB No. 2040-0004
Approval expires 05-31-98

NOTE: Read instructions before completing this form.

PARAMETER (32-37)		(3 Card Only) (46-53) QUANTITY OR LOADING AVERAGE	(54-61) MAXIMUM	UNITS	(4 Card Only) (38-45) QUANTITY OR CONCENTRATION MINIMUM	(46-53) AVERAGE	(54-61) MAXIMUM	UNITS	NO. EX (62-63)	FREQUENCY OF ANALYSIS (64-68)	SAMPLE TYPE (69-70)
BOD, 5-DAY (20 DEG. C) 00310 1 0 0 EFFLUENT GROSS VALUE	SAMPLE MEASUREMENT	.172	.689	(26)	******	1.425	5.7	(19)	0	1/7	24HC
	PERMIT REQUIREMENT	70 MO AVG	140 DAILY MX	LBS/DY	******	240 MO AVG	480 DAILY MX	MG/L		WEEKLY	COMP24
PH 00400 1 0 0 EFFLUENT GROSS VALUE	SAMPLE MEASUREMENT	******	******		7.15	******	8.4	(12)	0	2/7	GRAB
	PERMIT REQUIREMENT	******	******	**** ****	6.5 MINIMUM	******	9.5 MAXIMUM	SU		TWICE/WEEK	GRAB
SOLIDS, TOTAL SUSPENDED 00530 1 0 0 EFFLUENT GROSS VALUE	SAMPLE MEASUREMENT	1.287	3.870	(26)	******	14.125	32	(19)	0	1/7	24HC
	PERMIT REQUIREMENT	88 MO AVG	175 DAILY MX	LBS/DY	******	300 MO AVG	600 DAILY MX	MG/L		WEEKLY	COMP24
OIL & GREASE (FREON EXTR.-IR METH) TOT, RC 00560 1 0 0 EFFLUENT GROSS VALUE	SAMPLE MEASUREMENT	.361	.684	(01) LBS	******	4.905	7.64	(19)	0	1/7	GRAB
	PERMIT REQUIREMENT	REPORT MO AVG	29.2 DAILY MX	KG/ DAY	******	REPORT MO AVG	100 DAILY MX	MG/L		WEEKLY	GRAB
PENTACHLOROPHENOL 39032 1 0 0 EFFLUENT GROSS VALUE	SAMPLE MEASUREMENT	.00010	.00024	(01) LBS	******	.00175	.004	(19)	0	1/7	GRAB
	PERMIT REQUIREMENT	.053 MO AVG	.102 DAILY MX	KG/ DAY	******	.18 MO AVG	.36 DAILY MX	MG/L		WEEKLY	GRAB
PHENOLS 65000 1 0 0 EFFLUENT GROSS VALUE	SAMPLE MEASUREMENT	.00395	.00629	(01) LBS	******	.06	.078	(19)	0	1/7	GRAB
	PERMIT REQUIREMENT	.88 MO AVG	1.75 DAILY MX	KG/ DAY	******	3 MO AVG	6 DAILY MX	MG/L		WEEKLY	GRAB
FLOW, IN CONDUIT OR THRU TREATMENT PLANT 50050 1 0 0 EFFLUENT GROSS VALUE	SAMPLE MEASUREMENT	.010706	.033	(03)	******	******	******		0	CONT	N/A
	PERMIT REQUIREMENT	REPORT MO AVG	0.035 DAILY MX	MGD	******	******	******	**** ****		DAILY	CONTIN

NAME/TITLE PRINCIPAL EXECUTIVE OFFICER
Thomas L. Henderson
TYPED OR PRINTED

I CERTIFY UNDER PENALTY OF LAW THAT I HAVE PERSONALLY EXAMINED AND AM FAMILIAR WITH THE INFORMATION SUBMITTED HEREIN; AND BASED ON MY INQUIRY OF THOSE INDIVIDUALS IMMEDIATELY RESPONSIBLE FOR OBTAINING THE INFORMATION, I BELIEVE THE SUBMITTED INFORMATION IS TRUE, ACCURATE AND COMPLETE. I AM AWARE THAT THERE ARE SIGNIFICANT PENALTIES FOR SUBMITTING FALSE INFORMATION, INCLUDING THE POSSIBILITY OF FINE AND IMPRISONMENT. SEE 18 U.S.C. § 1001 AND 33 U.S.C. § 1319. *(Penalties under those statutes may include fines up to $10,000 and or maximum imprisonment of between 6 months and 5 years.)*

Thomas L. Henderson
SIGNATURE OF PRINCIPAL EXECUTIVE OFFICER OR AUTHORIZED AGENT

TELEPHONE		DATE		
601	226-4584	98	06	23
AREA CODE	NUMBER	YEAR	MO	DAY

COMMENTS AND EXPLANATION OF ANY VIOLATIONS *(Reference all attachments here)*

PERMITTEE NAME/ADDRESS (Include Facility Name/Location if Different)
NAME KOPPERS INDUSTRIES INC
ADDRESS P O BOX 160
TIE PLANT MS 38960

FACILITY
LOCATION
ATTN: MR. RONALD MURPHEY

NATIONAL POLLUTANT DISCHARGE ELIMINATION SYSTEM (NPDES)
DISCHARGE MONITORING REPORT (DMR)

(2-16)	(17-19)
MSP090300	001 Y
PERMIT NUMBER	DISCHARGE NUMBER

TOTAL FACILITY DISCHARGE
(SUBR NO) 12545
F - FINAL
MINOR

Form Approved.
OMB No. 2040-0004
Approval expires 05-31-98

MONITORING PERIOD	YEAR	MO	DAY		YEAR	MO	DAY
FROM	98	01	01	TO	98	06	30
	(20-21)	(22-23)	(24-25)		(26-27)	(28-29)	(30-31)

*** NO DISCHARGE [__] ***

NOTE: Read Instructions before completing this form.

PARAMETER (32-37)		(3 Card Only) QUANTITY OR LOADING (46-53) AVERAGE	(54-61) MAXIMUM	UNITS	(4 Card Only) QUANTITY OR CONCENTRATION (38-45) MINIMUM	(46-53) AVERAGE	(54-61) MAXIMUM	UNITS	NO. EX (62-63)	FREQUENCY OF ANALYSIS (64-68)	SAMPLE TYPE (69-70)
ARSENIC, TOTAL RECOV ERABLE 00978 1 0 0 EFFLUENT GROSS VALUE	SAMPLE MEASUREMENT	<.00052	<.00052	(26)	******	<.01	<.01	(19)	0	1/180	24HC
	PERMIT REQUIREMENT	REPORT ANNL AVG	0.131 ANNL MAX	LBS/DY	******	REPORT ANNL AVG	.45 ANNL MAX	MG/L		SEMI-ANNUAL	COMP24
CHROMIUM TOTAL RECOVERABLE 01118 1 0 0 EFFLUENT GROSS VALUE	SAMPLE MEASUREMENT	<.00005	<.00005	(26)	******	<.001	<.001	(19)	0	1/180	24HC
	PERMIT REQUIREMENT	REPORT ANNL AVG	1.168 ANNL MAX	LBS/DY	******	REPORT ANNL AVG	4.0 ANNL MAX	MG/L		SEMI-ANNUAL	COMP24
COPPER TOTAL RECOVERABLE 01119 1 0 0 EFFLUENT GROSS VALUE	SAMPLE MEASUREMENT	.00067	.00067	(26)	******	.013	.013	(19)	0	1/180	24HC
	PERMIT REQUIREMENT	REPORT ANNL AVG	0.642 ANNL MAX	LBS/DY	******	REPORT ANNL AVG	2.2 ANNL MAX	MG/L		SEMI-ANNUAL	COMP24
	SAMPLE MEASUREMENT										
	PERMIT REQUIREMENT										
	SAMPLE MEASUREMENT										
	PERMIT REQUIREMENT										
	SAMPLE MEASUREMENT										
	PERMIT REQUIREMENT										
	SAMPLE MEASUREMENT										
	PERMIT REQUIREMENT										

NAME/TITLE PRINCIPAL EXECUTIVE OFFICER
Thomas L. Henderson
TYPED OR PRINTED

I CERTIFY UNDER PENALTY OF LAW THAT I HAVE PERSONALLY EXAMINED AND AM FAMILIAR WITH THE INFORMATION SUBMITTED HEREIN; AND BASED ON MY INQUIRY OF THOSE INDIVIDUALS IMMEDIATELY RESPONSIBLE FOR OBTAINING THE INFORMATION, I BELIEVE THE SUBMITTED INFORMATION IS TRUE, ACCURATE AND COMPLETE. I AM AWARE THAT THERE ARE SIGNIFICANT PENALTIES FOR SUBMITTING FALSE INFORMATION, INCLUDING THE POSSIBILITY OF FINE AND IMPRISONMENT. SEE 18 U.S.C. § 1001 AND 33 U.S.C. § 1319. *(Penalties under these statutes may include fines up to $10,000 and or maximum imprisonment of between 6 months and 5 years.)*

Thomas L Henderson
SIGNATURE OF PRINCIPAL EXECUTIVE OFFICER OR AUTHORIZED AGENT

TELEPHONE		DATE		
AREA CODE	NUMBER	YEAR	MO	DAY
		98	6	23

COMMENTS AND EXPLANATION OF ANY VIOLATIONS *(Reference all attachments here)*

PERMITTEE NAME/ADDRESS (Include Facility Name/Location if Different)
NAME KOPPERS INDUSTRIES INC
ADDRESS P O BOX 160
TIE PLANT MS 38960

FACILITY LOCATION
ATTN: ~~MR. RONALD MURPHEY~~ Thomas L. Henderson

NATIONAL POLLUTANT DISCHARGE ELIMINATION SYSTEM (NPDES)
DISCHARGE MONITORING REPORT (DMR)

(2-16)	(17-19)
MSP090300	001 A
PERMIT NUMBER	DISCHARGE NUMBER

Form Approved.
OMB No. 2040-0004
Approval expires 05-31-98

TOTAL FACILITY DISCHARGE
(SUBR NO) 12345
F - FINAL
MINOR

MONITORING PERIOD	YEAR	MO	DAY		YEAR	MO	DAY
FROM	98	04	01	TO	98	04	30
	(20-21)	(22-23)	(24-25)		(26-27)	(28-29)	(30-31)

*** NO DISCHARGE |__| ***

NOTE: Read instructions before completing this form.

PARAMETER (32-37)		QUANTITY OR LOADING (3 Card Only) (46-53) AVERAGE	(54-61) MAXIMUM	UNITS	QUANTITY OR CONCENTRATION (4 Card Only) (38-45) MINIMUM	(46-53) AVERAGE	(54-61) MAXIMUM	UNITS	NO. EX (62-63)	FREQUENCY OF ANALYSIS (64-68)	SAMPLE TYPE (69-70)
BOD, 5-DAY (20 DEG. C) 00310 1 0 0 EFFLUENT GROSS VALUE	SAMPLE MEASUREMENT	0.795	1.182	(26)	******	6.075	10.5	(19)	0	1/7	24hr-Comp
	PERMIT REQUIREMENT	70 MO AVG	140 DAILY MX	LBS/DY	******	240 MO AVG	480 DAILY MX	MG/L		WEEKLY	COMP24
P[illegible] 00400 1 0 0 EFFLUENT GROSS VALUE	SAMPLE MEASUREMENT	******	******		7.04	******	8.11	(12)	0	2/7	Grab
	PERMIT REQUIREMENT	******	******	******	5.5 MINIMUM	******	9.5 MAXIMUM	SU		TWICE/WEEK	GRAB
SOLIDS, TOTAL SUSPENDED 00530 1 0 0 EFFLUENT GROSS VALUE	SAMPLE MEASUREMENT	4.645	13.236	(26)	******	28.5025	69	(19)	0	1/7	24hr Comp
	PERMIT REQUIREMENT	88 MO AVG	175 DAILY MX	LBS/DY	******	300 MO AVG	600 DAILY MX	MG/L		WEEKLY	COMP24
OIL & GREASE (FREON EXTR.-IR METH) TOT,RC 00560 1 0 0 EFFLUENT GROSS VALUE	SAMPLE MEASUREMENT	1.144	1.502	(01)	******	8.495	11.4	(19)	0	1/7	~~GRAB~~ Comp
	PERMIT REQUIREMENT	REPORT MO AVG	29.2 DAILY MX	KG/DAY	******	REPORT MO AVG	100 DAILY MX	MG/L		WEEKLY	GRAB
PENTACHLOROPHENOL 39032 1 0 0 EFFLUENT GROSS VALUE	SAMPLE MEASUREMENT	.00076 ~~.00083~~	.00119 ~~.00164~~	(01)	******	.0065	.01	(19)	0	1/7	Grab
	PERMIT REQUIREMENT	.053 MO AVG	.102 DAILY MX	KG/DAY	******	.18 MO AVG	.36 DAILY MX	MG/L		WEEKLY	GRAB
PHENOLS 46000 1 0 0 EFFLUENT GROSS VALUE	SAMPLE MEASUREMENT	.00452 ~~.00387~~	.01113 ~~.00443~~	(01)	******	.03075	.065	(19)	0	1/7	Grab
	PERMIT REQUIREMENT	.88 MO AVG	1.75 DAILY MX	KG/DAY	******	3 MO AVG	6 DAILY MX	MG/L		WEEKLY	GRAB
FLOW, IN CONDUIT OR THRU TREATMENT PLANT 50050 1 0 0 EFFLUENT GROSS VALUE	SAMPLE MEASUREMENT	.0152 ~~[illegible]~~	.0262	(03)	******	******	******			Daily	Cont
	PERMIT REQUIREMENT	REPORT MO AVG	0.035 DAILY MX	MGD	******	******	******	**** ****		DAILY	CONTIN

NAME/TITLE PRINCIPAL EXECUTIVE OFFICER
Thomas L. Henderson Plant Manager
TYPED OR PRINTED

I CERTIFY UNDER PENALTY OF LAW THAT I HAVE PERSONALLY EXAMINED AND AM FAMILIAR WITH THE INFORMATION SUBMITTED HEREIN; AND BASED ON MY INQUIRY OF THOSE INDIVIDUALS IMMEDIATELY RESPONSIBLE FOR OBTAINING THE INFORMATION, I BELIEVE THE SUBMITTED INFORMATION IS TRUE, ACCURATE AND COMPLETE. I AM AWARE THAT THERE ARE SIGNIFICANT PENALTIES FOR SUBMITTING FALSE INFORMATION, INCLUDING THE POSSIBILITY OF FINE AND IMPRISONMENT. SEE 18 U.S.C. § 1001 AND 33 U.S.C. § 1319. *(Penalties under these statutes may include fines up to $10,000 and or maximum imprisonment of between 6 months and 5 years.)*

Thomas L. Henderson
SIGNATURE OF PRINCIPAL EXECUTIVE OFFICER OR AUTHORIZED AGENT

TELEPHONE		DATE		
601	226 4564	98	05	22
AREA CODE	NUMBER	YEAR	MO	DAY

COMMENTS AND EXPLANATION OF ANY VIOLATIONS *(Reference all attachments here)*

James A. Hatch 6-25-98

3. Describe how equipment will be decontaminated (e.g., high-pressure water) and how wash water will be collected.

VII. LANDFILLS (Non-Clean Closure)

A-1. Final Cover Design and Construction

1. The plan must provide for installation of a drainage and filter layer in the final cover, if more than residual contamination is left in the impoundment after treatment/disposal of sludge:

   (a) The impoundment is in a high annual precipitation area. A drainage layer is required to reduce percolation through the low permeability bottom layer. The Hydrologic Evaluation of Landfill Performance (HELP) Model developed by the U. S. Army Waterways Experiment Station, Corps of Engineers, in Vicksburg, Mississippi, may be used to evaluate performance. The technical documents (EPA/530-SW-84-009 and EPA/530-SW-84-010) can be obtained from EPA Headquarters by calling (800) 424-9346 (Hotline) or (FTS) 382-3000 (Hotline). The contact person (for content information only) is Paul Cassidy (382-4682).

   (b) The drainage layer must be designed so that discharge flows freely in the lateral direction to minimize head on and flow through the low permeability layer.

   (c) The plan must provide an additional drawing (cross sections) of the impoundment that illustrates the drainage and filter layers.

   (d) Koppers should propose a level of contamination above which a drainage and filter layer would be required.

2. The top slope of the final cover must be specified. (EPA guidance specifies a final top slope of three to five percent, unless the owner or operator knows that an alternate slope will effectively promote drainage and not subject the closed facility to erosion.)

3. The plan must provide for a perimeter drainage ditch to remove run-off, prevent ponding, etc.

4. The plan should specify the vegetation species and provide assurance that the root system will not penetrate into the low permeability bottom layer.

5. The plan should address the following items or else state that they are not applicable and provide an explanation: (1) potential settlement of the cover; (2) potential for gas generation; and (3) effects of freeze-thaw cycles on the cover.

PERMITTEE NAME/ADDRESS *(Include Facility Name/Location if Different)*
NAME KOPPERS INDUSTRIES INC
ADDRESS P O BOX 160
TIE PLANT MS 38960

FACILITY LOCATION Thomas L. Henderson
ATTN: ~~MR. RONALD HURTMON~~

NATIONAL POLLUTANT DISCHARGE ELIMINATION SYSTEM *(NPDES)*
DISCHARGE MONITORING REPORT *(DMR)*

(2-16)	(17-19)
MSP090300	001 A
PERMIT NUMBER	DISCHARGE NUMBER

TOTAL FACILITY DISCHARGE
(SUBR NO)
F - FINAL
MINOR

Form Approved.
OMB No. 2040-0004
Approval expires 05-31-98

12345

MONITORING PERIOD	YEAR	MO	DAY		YEAR	MO	DAY
FROM	98	04	01	TO	98	04	30
	(20-21)	(22-23)	(24-25)		(26-27)	(28-29)	(30-31)

*** NO DISCHARGE |__| ***
NOTE: Read instructions before completing this form.

PARAMETER (32-37)		QUANTITY OR LOADING (3 Card Only) (46-53) AVERAGE	(54-61) MAXIMUM	UNITS	QUANTITY OR CONCENTRATION (4 Card Only) (38-45) MINIMUM	(46-53) AVERAGE	(54-61) MAXIMUM	UNITS	NO. EX (62-63)	FREQUENCY OF ANALYSIS (64-68)	SAMPLE TYPE (69-70)
BOD, 5-DAY (20 DEG. C) 00310 1 0 0 EFFLUENT GROSS VALUE	SAMPLE MEASUREMENT	0.795	1.182	(26)	******	6.075	10.5	(19)	0	1/7	24hr Comp
	PERMIT REQUIREMENT	70 MO AVG	140 DAILY MX	LBS/DY	******	240 MO AVG	480 DAILY MX	MG/L		WEEKLY	COMP24
PH 00400 1 0 0 EFFLUENT GROSS VALUE	SAMPLE MEASUREMENT	******	******		7.04	******	8.11	(12)	0	2/7	Grab
	PERMIT REQUIREMENT	******	******	**** ****	5.5 MINIMUM	******	9.5 MAXIMUM	SU		TWICE/WEEK	GRAB
SOLIDS, TOTAL SUSPENDED 00530 1 0 0 EFFLUENT GROSS VALUE	SAMPLE MEASUREMENT	4.645	13.236	(26)	******	28.5025	69	(19)	0	1/7	24hr Comp
	PERMIT REQUIREMENT	88 MO AVG	175 DAILY MX	LBS/DY	******	300 MO AVG	600 DAILY MX	MG/L		WEEKLY	COMP24
OIL & GREASE (FREON EXTR.-IR METH) TOT, RC 00560 1 0 0 EFFLUENT GROSS VALUE	SAMPLE MEASUREMENT	1.144	1.502	(01)	******	8.495	11.4	(19)	0	1/7	~~GRAB~~ Comp
	PERMIT REQUIREMENT	REPORT MO AVG	29.2 DAILY MX	KG/DAY	******	REPORT MO AVG	100 DAILY MX	MG/L		WEEKLY	GRAB
PENTACHLOROPHENOL 39032 1 0 0 EFFLUENT GROSS VALUE	SAMPLE MEASUREMENT	.00083	.00164	(01)	******	.0065	.01	(19)	0	1/7	Grab
	PERMIT REQUIREMENT	.053 MO AVG	.102 DAILY MX	KG/DAY	******	.18 MO AVG	.36 DAILY MX	MG/L		WEEKLY	GRAB
PHENOLS 46000 1 0 0 EFFLUENT GROSS VALUE	SAMPLE MEASUREMENT	.00387	.00943	(01)	******	.03075	.065	(19)	0	1/7	Grab
	PERMIT REQUIREMENT	.88 MO AVG	1.75 DAILY MX	KG/DAY	******	3 MO AVG	6 DAILY MX	MG/L		WEEKLY	GRAB
FLOW, IN CONDUIT OR THRU TREATMENT PLANT 50050 1 0 0 EFFLUENT GROSS VALUE	SAMPLE MEASUREMENT	.0137	.0262	(03)	******	******	******			Daily	Cont.
	PERMIT REQUIREMENT	REPORT MO AVG	0.035 DAILY MX	MGD	******	******	******	**** ****		DAILY	CONTIN

NAME/TITLE PRINCIPAL EXECUTIVE OFFICER		TELEPHONE		DATE		
Thomas L. Henderson Plant Manager	I CERTIFY UNDER PENALTY OF LAW THAT I HAVE PERSONALLY EXAMINED AND AM FAMILIAR WITH THE INFORMATION SUBMITTED HEREIN; AND BASED ON MY INQUIRY OF THOSE INDIVIDUALS IMMEDIATELY RESPONSIBLE FOR OBTAINING THE INFORMATION, I BELIEVE THE SUBMITTED INFORMATION IS TRUE, ACCURATE AND COMPLETE. I AM AWARE THAT THERE ARE SIGNIFICANT PENALTIES FOR SUBMITTING FALSE INFORMATION, INCLUDING THE POSSIBILITY OF FINE AND IMPRISONMENT. SEE 18 U.S.C. § 1001 AND 33 U.S.C. § 1319. *(Penalties under these statutes may include fines up to $10,000 and or maximum imprisonment of between 6 months and 5 years.)*	Thomas L. Henderson	601	226-4584	98	05	22
TYPED OR PRINTED		SIGNATURE OF PRINCIPAL EXECUTIVE OFFICER OR AUTHORIZED AGENT	AREA CODE	NUMBER	YEAR	MO	DAY

COMMENTS AND EXPLANATION OF ANY VIOLATIONS *(Reference all attachments here)*

PERMITTEE NAME/ADDRESS (Include Facility Name/Location if Different)
NAME KOPPERS INDUSTRIES INC
ADDRESS P O BOX 160
TIE PLANT MS 38960

NATIONAL POLLUTANT DISCHARGE ELIMINATION SYSTEM (NPDES)
DISCHARGE MONITORING REPORT (DMR)

GRENADA

Form Approved. OMB No. 2040-0004 Approval expires 05-31-98

TOTAL FACILITY DISCHARGE
(SUBR NO) 12545
F - FINAL
MINOR

(2-16)	(17-19)
MSP090300	001 A
PERMIT NUMBER	DISCHARGE NUMBER

FACILITY LOCATION Thomas L. Henderson
ATTN: ~~MR. RONALD MURPHEY~~

MONITORING PERIOD	YEAR	MO	DAY		YEAR	MO	DAY
FROM	98	03	01	TO	98	03	31
	(20-21)	(22-23)	(24-25)		(26-27)	(28-29)	(30-31)

*** NO DISCHARGE [ ] ***

NOTE: Read Instructions before completing this form.

PARAMETER (32-37)		(3 Card Only) QUANTITY OR LOADING (46-53) AVERAGE	(54-61) MAXIMUM	UNITS	(4 Card Only) QUANTITY OR CONCENTRATION (38-45) MINIMUM	(46-53) AVERAGE	(54-61) MAXIMUM	UNITS	NO. EX (62-63)	FREQUENCY OF ANALYSIS (64-68)	SAMPLE TYPE (69-70)
BOD, 5-DAY (20 DEG. C)	SAMPLE MEASUREMENT	2.418	4.310	(26)	******	29.7	20.14	(19)		1/7	24hc
00310 1 0 0	PERMIT REQUIREMENT	70 MO AVG	140 DAILY MX	LBS/DY	******	240 MO AVG	480 DAILY MX	MG/L		WEEKLY	COMP24
PH	SAMPLE MEASUREMENT	******	******		6.49	******	8.2	(12)		2/7	Grab
00400 1 0 0	PERMIT REQUIREMENT	******	******	**** ****	5.5 MINIMUM	******	9.5 MAXIMUM	SU		TWICE/WEEK	GRAB
SOLIDS, TOTAL SUSPENDED	SAMPLE MEASUREMENT	12.382	37.26	(26)	******	89.7	204	(19)		1/7	24hc
00530 1 0 0	PERMIT REQUIREMENT	68 MO AVG	175 DAILY MX	LBS/DY	******	300 MO AVG	600 DAILY MX	MG/L		WEEKLY	COMP24
OIL & GREASE (FREON EXTR.-IR METH) TOT, RC	SAMPLE MEASUREMENT	1.718	3.164	(01) lbs	******	13.85	21.8	(19)		1/7	Grab
00560 1 0 0	PERMIT REQUIREMENT	REPORT MO AVG	29.2 ~~KG/~~ DAILY MX	DAY	******	REPORT MO AVG	100 DAILY MX	MG/L		WEEKLY	GRAB
PENTACHLOROPHENOL	SAMPLE MEASUREMENT	.00162	.0029	(01) lbs	******	.016	.03	(19)		1/7	Grab
39032 1 0 0	PERMIT REQUIREMENT	.053 MO AVG	.102 ~~KG/~~ DAILY MX	DAY	******	.18 MO AVG	.36 DAILY MX	MG/L		WEEKLY	GRAB
PHENOLS	SAMPLE MEASUREMENT	.00896	.015	(01) lbs	******	.0792	.144	(19)		1/7	Grab
65000 1 0 0	PERMIT REQUIREMENT	.88 MO AVG	1.75 ~~KG/~~ DAILY MX	DAY	******	3 MO AVG	6 DAILY MX	MG/L		WEEKLY	GRAB
FLOW, IN CONDUIT OR THRU TREATMENT PLANT	SAMPLE MEASUREMENT	.0143	.0288	(03)	******	******	******			Daily	Cont
50050 1 0 0	PERMIT REQUIREMENT	REPORT MO AVG	0.035 DAILY MX	MGD	******	******	******	**** ****		DAILY	CONTIN

NAME/TITLE PRINCIPAL EXECUTIVE OFFICER			TELEPHONE		DATE		
Thomas L. Henderson	I CERTIFY UNDER PENALTY OF LAW THAT I HAVE PERSONALLY EXAMINED AND AM FAMILIAR WITH THE INFORMATION SUBMITTED HEREIN; AND BASED ON MY INQUIRY OF THOSE INDIVIDUALS IMMEDIATELY RESPONSIBLE FOR OBTAINING THE INFORMATION, I BELIEVE THE SUBMITTED INFORMATION IS TRUE, ACCURATE AND COMPLETE. I AM AWARE THAT THERE ARE SIGNIFICANT PENALTIES FOR SUBMITTING FALSE INFORMATION, INCLUDING THE POSSIBILITY OF FINE AND IMPRISONMENT. SEE 18 U.S.C. § 1001 AND 33 U.S.C. § 1319. (Penalties under these statutes may include fines up to $10,000 and or maximum imprisonment of between 6 months and 5 years.)	Thomas L. Henderson	601	226-4584	98	04	30
TYPED OR PRINTED		SIGNATURE OF PRINCIPAL EXECUTIVE OFFICER OR AUTHORIZED AGENT	AREA CODE	NUMBER	YEAR	MO	DAY

COMMENTS AND EXPLANATION OF ANY VIOLATIONS (Reference all attachments here)

PERMITTEE NAME/ADDRESS (Include Facility Name/Location if Different)

NAME KOPPERS INDUSTRIES INC

ADDRESS P O BOX 160

TIE PLANT MS 38960

FACILITY

LOCATION

ATTN: MR. RONALD MURPHEY

NATIONAL POLLUTANT DISCHARGE ELIMINATION SYSTEM (NPDES)

DISCHARGE MONITORING REPORT (DMR)

(2-16) MSP090300 — PERMIT NUMBER

(17-19) 001 A — DISCHARGE NUMBER

G RENADA

TOTAL FACILITY DISCHARGE

(SUBR NO) 12345

F - FINAL

MINOR

Form Approved. OMB No. 2040-0004 Approval expires 05-31-98

MONITORING PERIOD	YEAR	MO	DAY		YEAR	MO	DAY
FROM	98	02	01	TO	98	02	28
	(20-21)	(22-23)	(24-25)		(26-27)	(28-29)	(30-31)

*** NO DISCHARGE [_] ***

NOTE: Read Instructions before completing this form.

PARAMETER (32-37)		(3 Card Only) QUANTITY OR LOADING (46-53) AVERAGE	(54-61) MAXIMUM	UNITS	(4 Card Only) QUANTITY OR CONCENTRATION (38-45) MINIMUM	(46-53) AVERAGE	(54-61) MAXIMUM	UNITS	NO. EX (62-63)	FREQUENCY OF ANALYSIS (64-68)	SAMPLE TYPE (69-70)
BOD, 5-DAY (20 DEG. C) 00310 1 0 0 EFFLUENT GROSS VALUE	SAMPLE MEASUREMENT	1.110	2.139	(26)	******	8.5	13.5	(19)		1/7	24hc
	PERMIT REQUIREMENT	70 MO AVG	140 DAILY MX	LBS/DY	******	240 MO AVG	480 DAILY MX	MG/L		WEEKLY	COMP24
00400 1 0 0 EFFLUENT GROSS VALUE	SAMPLE MEASUREMENT	******	******		6.56	******	7.3	(12)		2/7	Grab
	PERMIT REQUIREMENT	******	******	**** ****	5.5 MINIMUM	******	9.5 MAXIMUM	SU		TWICE/WEEK	GRAB
SOLIDS, TOTAL SUSPENDED 00530 1 0 0 EFFLUENT GROSS VALUE	SAMPLE MEASUREMENT	8.004	24.720	(26)	******	58.25	156	(19)		1/7	24hc
	PERMIT REQUIREMENT	88 MO AVG	175 DAILY MX	LBS/DY	******	300 MO AVG	600 DAILY MX	MG/L		WEEKLY	COMP24
OIL & GREASE (FREON EXTR.-IR METH) TOT, RC 00560 1 0 0 EFFLUENT GROSS VALUE	SAMPLE MEASUREMENT	1.071	1.949	(01) lbs	******	10.455	17.1	(19)		1/7	Grab
	PERMIT REQUIREMENT	REPORT MO AVG	29.2 ~~KG/~~ DAILY MX	DAY	******	REPORT MO AVG	100 DAILY MX	MG/L		WEEKLY	GRAB
PENTACHLOROPHENOL 39032 1 0 0 EFFLUENT GROSS VALUE	SAMPLE MEASUREMENT	.00025	.00098	(01) lbs	******	.005	.02	(19)		1/7	Grab
	PERMIT REQUIREMENT	.053 MO AVG	.102 ~~KG/~~ DAILY MX	DAY	******	.18 MO AVG	.36 DAILY MX	MG/L		WEEKLY	GRAB
PHENOLS 46000 1 0 0 EFFLUENT GROSS VALUE	SAMPLE MEASUREMENT	.0057	.0228	(01) lbs	******	.036	.144	(19)		1/7	Grab
	PERMIT REQUIREMENT	.88 MO AVG	1.75 ~~KG/~~ DAILY MX	DAY	******	3 MO AVG	6 DAILY MX	MG/L		WEEKLY	GRAB
FLOW, IN CONDUIT OR THRU TREATMENT PLANT 50050 1 0 0 EFFLUENT GROSS VALUE	SAMPLE MEASUREMENT	.014	.025	(03)	******	******	******			Daily	Cont.
	PERMIT REQUIREMENT	REPORT MO AVG	0.035 DAILY MX	MGD	******	******	******	**** ****		DAILY	CONTIN

NAME/TITLE PRINCIPAL EXECUTIVE OFFICER

Thomas C. Henderson

TYPED OR PRINTED

I CERTIFY UNDER PENALTY OF LAW THAT I HAVE PERSONALLY EXAMINED AND AM FAMILIAR WITH THE INFORMATION SUBMITTED HEREIN; AND BASED ON MY INQUIRY OF THOSE INDIVIDUALS IMMEDIATELY RESPONSIBLE FOR OBTAINING THE INFORMATION, I BELIEVE THE SUBMITTED INFORMATION IS TRUE, ACCURATE AND COMPLETE. I AM AWARE THAT THERE ARE SIGNIFICANT PENALTIES FOR SUBMITTING FALSE INFORMATION, INCLUDING THE POSSIBILITY OF FINE AND IMPRISONMENT. SEE 18 U.S.C. § 1001 AND 33 U.S.C. § 1319. *(Penalties under these statutes may include fines up to $10,000 and or maximum imprisonment of between 6 months and 5 years.)*

Thomas C. Henderson

SIGNATURE OF PRINCIPAL EXECUTIVE OFFICER OR AUTHORIZED AGENT

TELEPHONE		DATE		
601	226-4584	98	03	28
AREA CODE	NUMBER	YEAR	MO	DAY

COMMENTS AND EXPLANATION OF ANY VIOLATIONS *(Reference all attachments here)*

PERMITTEE NAME/ADDRESS (Include Facility Name/Location if Different)
NAME KOPPERS INDUSTRIES INC
ADDRESS P O BOX 150
TIE PLANT MS 38960

FACILITY
LOCATION
ATTN: MR. RONALD MURPHEY

NATIONAL POLLUTANT DISCHARGE ELIMINATION SYSTEM (NPDES)
DISCHARGE MONITORING REPORT (DMR)

(2-16) PERMIT NUMBER	(17-19) DISCHARGE NUMBER
MSP090300	001 A

MONITORING PERIOD

	YEAR	MO	DAY		YEAR	MO	DAY
FROM	98	01	01	TO	98	01	31
	(20-21)	(22-23)	(24-25)		(26-27)	(28-29)	(30-31)

Form Approved.
OMB No. 2040-0004
Approval expires 05-31-98

TOTAL FACILITY DISCHARGE
(SUBR NO) 12345
F - FINAL
MINOR

*** NO DISCHARGE [__] ***

NOTE: Read Instructions before completing this form.

PARAMETER (32-37)		(3 Card Only) QUANTITY OR LOADING (46-53) AVERAGE	(54-61) MAXIMUM	UNITS	(4 Card Only) QUANTITY OR CONCENTRATION (38-45) MINIMUM	(46-53) AVERAGE	(54-61) MAXIMUM	UNITS	NO. EX (62-63)	FREQUENCY OF ANALYSIS (64-68)	SAMPLE TYPE (69-70)
BOD, 5-DAY (20 DEG. C) 00310 1 0 0 EFFLUENT GROSS VALUE	SAMPLE MEASUREMENT	.5501	.6880	(26)	******	4.05	4.65	(19)		1/7	24hc
	PERMIT REQUIREMENT	70 MO AVG	140 DAILY MX	LBS/DY	******	240 MO AVG	480 DAILY MX	MG/L		WEEKLY	COMP24
00400 1 0 0 EFFLUENT GROSS VALUE	SAMPLE MEASUREMENT	******	******		6.90	******	8.15	(12)		7/7	Grab
	PERMIT REQUIREMENT	******	******	**** ****	5.5 MINIMUM	******	9.5 MAXIMUM	SU		TWICE/WEEK	GRAB
SOLIDS, TOTAL SUSPENDED 00530 1 0 0 EFFLUENT GROSS VALUE	SAMPLE MEASUREMENT	4.288	5.504	(26)	******	32.75	44	(19)		1/7	24hc
	PERMIT REQUIREMENT	88 MO AVG	175 DAILY MX	LBS/DY	******	300 MO AVG	600 DAILY MX	MG/L		WEEKLY	COMP24
OIL & GREASE (FREON EXTR.-IR METH) TOT, RC 00560 1 0 0 EFFLUENT GROSS VALUE	SAMPLE MEASUREMENT	.4714	.6953	(01) lbs	******	3.452	4.11	(19)		1/7	Grab
	PERMIT REQUIREMENT	REPORT MO AVG	29.2 DAILY MX	KG/DAY	******	REPORT MO AVG	100 DAILY MX	MG/L		WEEKLY	GRAB
PENTACHLOROPHENOL 39032 1 0 0 EFFLUENT GROSS VALUE	SAMPLE MEASUREMENT	0	0	(01) lbs	******	0	0	(19)		1/7	Grab
	PERMIT REQUIREMENT	.053 MO AVG	.102 DAILY MX	KG/DAY	******	.18 MO AVG	.36 DAILY MX	MG/L		WEEKLY	GRAB
PHENOLS 34000 1 0 0 EFFLUENT GROSS VALUE	SAMPLE MEASUREMENT	.0043	.0095	(01) lbs	******	.0255	.052	(19)		1/7	Grab
	PERMIT REQUIREMENT	.88 MO AVG	1.75 DAILY MX	KG/DAY	******	3 MO AVG	6 DAILY MX	MG/L		WEEKLY	GRAB
FLOW, IN CONDUIT OR THRU TREATMENT PLANT 50050 1 0 0 EFFLUENT GROSS VALUE	SAMPLE MEASUREMENT	.012	.027	(03)	******	******	******			Daily	Cont.
	PERMIT REQUIREMENT	REPORT MO AVG	0.035 DAILY MX	MGD	******	******	******	**** ****		DAILY	CONTIN

NAME/TITLE PRINCIPAL EXECUTIVE OFFICER		TELEPHONE		DATE		
Thomas L. Henderson	I CERTIFY UNDER PENALTY OF LAW THAT I HAVE PERSONALLY EXAMINED AND AM FAMILIAR WITH THE INFORMATION SUBMITTED HEREIN; AND BASED ON MY INQUIRY OF THOSE INDIVIDUALS IMMEDIATELY RESPONSIBLE FOR OBTAINING THE INFORMATION, I BELIEVE THE SUBMITTED INFORMATION IS TRUE, ACCURATE AND COMPLETE. I AM AWARE THAT THERE ARE SIGNIFICANT PENALTIES FOR SUBMITTING FALSE INFORMATION, INCLUDING THE POSSIBILITY OF FINE AND IMPRISONMENT. SEE 18 U.S.C. § 1001 AND 33 U.S.C. § 1319. (Penalties under these statutes may include fines up to $10,000 and or maximum imprisonment of between 6 months and 5 years.)	Thomas L. Henderson	601	226-4584	98	02	26
TYPED OR PRINTED		SIGNATURE OF PRINCIPAL EXECUTIVE OFFICER OR AUTHORIZED AGENT	AREA CODE	NUMBER	YEAR	MO	DAY

COMMENTS AND EXPLANATION OF ANY VIOLATIONS (Reference all attachments here)

NAME KOPPERS INDUSTRIES INC
ADDRESS P O BOX 160
TIE PLANT MS 38960

FACILITY LOCATION KOPPERS INDUSTRIES INC
ATTN: MR. RONALD MURPHEY

NATIONAL POLLUTANT DISCHARGE ELIMINATION SYSTEM (NPDES)
DISCHARGE MONITORING REPORT (DMR)
(2-16) (17-19)

MS0090300 — PERMIT NUMBER
001 A — DISCHARGE NUMBER

TOTAL FACILITY DISCHARGE
(SUBR NC) 12345
F - FINAL
PLACE

Form Approved.
OMB No. 2040-0004
Approval Expires 05-31-98

MONITORING PERIOD

	YEAR	MO	DAY		YEAR	MO	DAY
FROM	97	12	01	TO	97	12	31
	(20-21)	(22-23)	(24-25)		(26-27)	(28-29)	(30-31)

*** NO DISCHARGE | | ***

NOTE: Read instructions before completing this form.

PARAMETER (32-37)		(3 Card Only) (46-53) QUANTITY OR LOADING (54-61) AVERAGE	MAXIMUM	UNITS	(4 Card Only) (38-45) QUANTITY OR CONCENTRATION (46-53) MINIMUM	(54-61) AVERAGE	MAXIMUM	UNITS	NO. EX (62-63)	FREQUENCY OF ANALYSIS (64-68)	SAMPLE TYPE (69-70)
BOD, 5-DAY (20 DEG. C) 00310 1 0 0 EFFLUENT GROSS VALUE	SAMPLE MEASUREMENT	.4667	1.238	(26)	******	3.81	8.25	(19)		1/7	24hc
	PERMIT REQUIREMENT	70 MO AVG	140 DAILY MX	LBS/DY	******	240 MO AVG	480 DAILY MX	MG/L		WEEKLY	COMP24
00400 1 0 0 EFFLUENT GROSS VALUE	SAMPLE MEASUREMENT	******	******		6.86	******	7.60	(12)		2/7	Grab
	PERMIT REQUIREMENT	******	******	** ** * ***	6.5 MINIMUM	******	9.0 MAXIMUM	SU		TWICE/WEEK	GRAB
SOLIDS, TOTAL SUSPENDED 00530 1 0 0 EFFLUENT GROSS VALUE	SAMPLE MEASUREMENT	8.857	23.41	(26)	******	71.2	156	(19)		1/7	24hc
	PERMIT REQUIREMENT	68 MO AVG	175 DAILY MX	LBS/DY	******	300 MO AVG	600 DAILY MX	MG/L		WEEKLY	COMP24
OIL & GREASE (FREON EXTR.-IR METH) TOT,RC 00560 1 0 0 EFFLUENT GROSS VALUE	SAMPLE MEASUREMENT	.5524	.2541	(01)	******	2.136	3.68	(19)		1/7	Grab
	PERMIT REQUIREMENT	REPORT MO AVG	29.2 DAILY MX	KG/DAY	******	REPORT MO AVG	100 DAILY MX	MG/L		WEEKLY	GRAB
PENTACHLOROPHENOL 39032 1 0 0 EFFLUENT GROSS VALUE	SAMPLE MEASUREMENT	0	0	(01)	******	0	0	(19)		1/7	Grab
	PERMIT REQUIREMENT	.051 MO AVG	.102 DAILY MX	KG/DAY	******	.18 MO AVG	.36 DAILY MX	MG/L		WEEKLY	GRAB
PHENOLS 32730 1 0 0 EFFLUENT GROSS VALUE	SAMPLE MEASUREMENT	.0016	.0028	(01)	******	.0124	.062	(19)		1/7	Grab
	PERMIT REQUIREMENT	.88 MO AVG	1.75 DAILY MX	KG/DAY	******	3 MO AVG	6 DAILY MX	MG/L		WEEKLY	GRAB
FLOW, IN CONDUIT OR THRU TREATMENT PLANT 50050 1 0 0 EFFLUENT GROSS VALUE	SAMPLE MEASUREMENT	.012	.023	(03)	******	******	******			Daily	Cont
	PERMIT REQUIREMENT	REPORT MO AVG	0.035 DAILY MX	MGD	******	******	******	**** ****		DAILY	CONTIN

NAME/TITLE PRINCIPAL EXECUTIVE OFFICER
Thomas C. Henderson
TYPED OR PRINTED

I CERTIFY UNDER PENALTY OF LAW THAT I HAVE PERSONALLY EXAMINED AND AM FAMILIAR WITH THE INFORMATION SUBMITTED HEREIN; AND BASED ON MY INQUIRY OF THOSE INDIVIDUALS IMMEDIATELY RESPONSIBLE FOR OBTAINING THE INFORMATION, I BELIEVE THE SUBMITTED INFORMATION IS TRUE, ACCURATE AND COMPLETE. I AM AWARE THAT THERE ARE SIGNIFICANT PENALTIES FOR SUBMITTING FALSE INFORMATION, INCLUDING THE POSSIBILITY OF FINE AND IMPRISONMENT. SEE 18 U.S.C. § 1001 AND 33 U.S.C. § 1319. *(Penalties under these statutes may include fines up to $10,000 and or maximum imprisonment of between 6 months and 5 years.)*

Thomas C. Henderson
SIGNATURE OF PRINCIPAL EXECUTIVE OFFICER OR AUTHORIZED AGENT

TELEPHONE		DATE		
AREA CODE	NUMBER	YEAR	MO	DAY
601	926-4584	98	28	98

COMMENTS AND EXPLANATION OF ANY VIOLATIONS *(Reference all attachments here)*

NAME KOPPERS INDUSTRIES INC
ADDRESS P O BOX 160
TIE PLANT MS 38960

Grenada

FACILITY LOCATION KOPPERS INDUSTRIES INC
ATTN: ~~MR.~~ RONALD MURPHEY

Thomas L. Henderson

NATIONAL POLLUTANT DISCHARGE ELIMINATION SYSTEM (NPDES)
DISCHARGE MONITORING REPORT (DMR)

PERMIT NUMBER (2-16)	DISCHARGE NUMBER (17-19)
MS0090306	001 A

TOTAL FACILITY DISCHARGE
(SUBR NO) 12345
F - FINAL
MINOR

Form Approved.
OMB No. 2040-0004
Approval expires 05-31-98

MONITORING PERIOD	YEAR	MO	DAY
FROM	97	11	01
TO	97	11	30
(20-21) (22-23) (24-25)			(26-27) (28-29) (30-31)

*** NO DISCHARGE | | ***

NOTE: Read instructions before completing this form.

PARAMETER (32-37)		QUANTITY OR LOADING (3 Card Only) (46-53) AVERAGE	(54-61) MAXIMUM	UNITS	QUANTITY OR CONCENTRATION (4 Card Only) (38-45) MINIMUM	(46-53) AVERAGE	(54-61) MAXIMUM	UNITS	NO. EX (62-63)	FREQUENCY OF ANALYSIS (64-68)	SAMPLE TYPE (69-70)
BOD, 5-DAY (20 DEG. C) 00310 1 0 0 EFFLUENT GROSS VALUE	SAMPLE MEASUREMENT	.09	.31	(26)	******	1.20	2.7	(19)		1/7	24hc
	PERMIT REQUIREMENT	70 MO AVG	140 DAILY MX	LBS/DY	******	240 MO AVG	480 DAILY MX	MG/L		WEEKLY	COMP24
00400 1 0 0 EFFLUENT GROSS VALUE	SAMPLE MEASUREMENT	******	******		6.99	******	8.10	(12)		2/7	Grab
	PERMIT REQUIREMENT	******	******	** ** * ***	5.5 MINIMUM	******	9.5 MAXIMUM	SU		DAILY WEEK	GRAB
SOLIDS, TOTAL SUSPENDED 00530 1 0 0 EFFLUENT GROSS VALUE	SAMPLE MEASUREMENT	3.282	4.90	(26)	******	48.37	76	(19)		1/7	24hc
	PERMIT REQUIREMENT	88 MO AVG	175 DAILY MX	LBS/DY	******	300 MO AVG	600 DAILY MX	MG/L		WEEKLY	COMP24
OIL & GREASE (FREON EXTR.-IR METH) TOT, RC 00560 1 0 0 EFFLUENT GROSS VALUE	SAMPLE MEASUREMENT	.19	.37	(01) lbs/day	******	2.39	3.22	(19)		1/7	Grab
	PERMIT REQUIREMENT	REPORT MO AVG	29.2 DAILY MX	kg/day	******	REPORT MO AVG	100 DAILY MX	MG/L		WEEKLY	GRAB
PENTACHLOROPHENOL 39032 1 0 0 EFFLUENT GROSS VALUE	SAMPLE MEASUREMENT	0	0	(01) lbs/day	******	0	0	(19)		1/7	Grab
	PERMIT REQUIREMENT	.053 MO AVG	.102 DAILY MX	kg/day	******	.18 MO AVG	.36 DAILY MX	MG/L		WEEKLY	GRAB
PHENOLS 34030 1 0 0 EFFLUENT GROSS VALUE	SAMPLE MEASUREMENT	.0191	.0630	(01)	******	.036	.054	(19)		1/7	Grab
	PERMIT REQUIREMENT	.88 MO AVG	1.75 DAILY MX	kg/day	******	3 MO AVG	6 DAILY MX	MG/L		WEEKLY	GRAB
FLOW, IN CONDUIT OR THRU TREATMENT PLANT 50050 1 0 0 EFFLUENT GROSS VALUE	SAMPLE MEASUREMENT	.010	.020	(03)	******	******	******			Daily	cont
	PERMIT REQUIREMENT	REPORT MO AVG	0.035 DAILY MX	MGD	******	******	******	**** ****		DAILY	CONTIN

NAME/TITLE PRINCIPAL EXECUTIVE OFFICER

Thomas L. Henderson

TYPED OR PRINTED

I CERTIFY UNDER PENALTY OF LAW THAT I HAVE PERSONALLY EXAMINED AND AM FAMILIAR WITH THE INFORMATION SUBMITTED HEREIN; AND BASED ON MY INQUIRY OF THOSE INDIVIDUALS IMMEDIATELY RESPONSIBLE FOR OBTAINING THE INFORMATION, I BELIEVE THE SUBMITTED INFORMATION IS TRUE, ACCURATE AND COMPLETE. I AM AWARE THAT THERE ARE SIGNIFICANT PENALTIES FOR SUBMITTING FALSE INFORMATION, INCLUDING THE POSSIBILITY OF FINE AND IMPRISONMENT. SEE 18 U.S.C. § 1001 AND 33 U.S.C. § 1319. *(Penalties under these statutes may include fines up to $10,000 and or maximum imprisonment of between 6 months and 5 years.)*

Thomas L. Henderson

SIGNATURE OF PRINCIPAL EXECUTIVE OFFICER OR AUTHORIZED AGENT

TELEPHONE AREA CODE	NUMBER	DATE YEAR	MO	DAY
601	226-4584	97	12	19

COMMENTS AND EXPLANATION OF ANY VIOLATIONS *(Reference all attachments here)*

(Name/Address (Include Facility Name/Location if Different)
[illegible]PPERS INDUSTRIES INC
[illegible] C BOX 160
[illegible]TIE PLANT MS 38960

Grenada

NATIONAL POLLUTANT DISCHARGE ELIMINATION SYSTEM (NPDES)
DISCHARGE MONITORING REPORT (DMR)

(2-16)	(17-19)
MSP090 300	C01 Y
PERMIT NUMBER	DISCHARGE NUMBER

TOTAL FACILITY DISCHARGE
(SUBF NC) 12345
F - FINAL
MINCH

Form Approved.
OMB No. 2040-0004
Approval expires 05-31-98

FACILITY KOPPERS INDUSTRIES INC
LOCATION
ATTN: MR. RONALD MURPHEY

MONITORING PERIOD	YEAR	MO	DAY		YEAR	MO	DAY
FROM	97	07	01	TO	97	12	31
	(20-21)	(22-23)	(24-25)		(26-27)	(28-29)	(30-31)

*** NO DISCHARGE [ ] ***

NOTE: Read instructions before completing this form.

PARAMETER (32-37)		(3 Card Only) QUANTITY OR LOADING (46-53) AVERAGE	(54-61) MAXIMUM	UNITS	(4 Card Only) QUANTITY OR CONCENTRATION (38-45) MINIMUM	(46-53) AVERAGE	(54-61) MAXIMUM	UNITS	NO. EX (62-63)	FREQUENCY OF ANALYSIS (64-68)	SAMPLE TYPE (69-70)
ARSENIC, TOTAL RECOVERABLE 00978 1 0 0 EFFLUENT GROSS VALUE	SAMPLE MEASUREMENT	.0089	.0089	(26)	******	.067	.067	(19)		Semi-9	24hc
	PERMIT REQUIREMENT	REPORT ANNL AVG	0.131 ANNL MAX	LBS/DY	******	REPORT ANNL AVG	.45 ANNL MAX	MG/L		SEMI-ANNUAL	CCMP24
[illegible]ROMIUM [illegible]TAL RECOVERABLE 01118 1 0 0 EFFLUENT GROSS VALUE	SAMPLE MEASUREMENT	.0008	.0008	(26)	******	.006	.006	(19)		Semi-9	24hc
	PERMIT REQUIREMENT	REPORT ANNL AVG	1.168 ANNL MAX	LBS/DY	******	REPORT ANNL AVG	4.0 ANNL MAX	MG/L		SEMI-ANNUAL	CCMP24
[illegible]PER TOTAL RECOVERABLE 01119 1 0 0 EFFLUENT GROSS VALUE	SAMPLE MEASUREMENT	.0114	.0114	(26)	******	.086	.086	(19)		Semi-9	24hc
	PERMIT REQUIREMENT	REPORT ANNL AVG	0.642 ANNL MAX	LBS/DY	******	REPORT ANNL AVG	2.2 ANNL MAX	MG/L		SEMI-ANNUAL	CCMP24
	SAMPLE MEASUREMENT										
	PERMIT REQUIREMENT										
	SAMPLE MEASUREMENT										
	PERMIT REQUIREMENT										
	SAMPLE MEASUREMENT										
	PERMIT REQUIREMENT										
	SAMPLE MEASUREMENT										
	PERMIT REQUIREMENT										

NAME/TITLE PRINCIPAL EXECUTIVE OFFICER

Thomas L. Henderson
TYPED OR PRINTED

I CERTIFY UNDER PENALTY OF LAW THAT I HAVE PERSONALLY EXAMINED AND AM FAMILIAR WITH THE INFORMATION SUBMITTED HEREIN; AND BASED ON MY INQUIRY OF THOSE INDIVIDUALS IMMEDIATELY RESPONSIBLE FOR OBTAINING THE INFORMATION, I BELIEVE THE SUBMITTED INFORMATION IS TRUE, ACCURATE AND COMPLETE. I AM AWARE THAT THERE ARE SIGNIFICANT PENALTIES FOR SUBMITTING FALSE INFORMATION, INCLUDING THE POSSIBILITY OF FINE AND IMPRISONMENT. SEE 18 U.S.C. § 1001 AND 33 U.S.C. § 1319. *(Penalties under these statutes may include fines up to $10,000 and or maximum imprisonment of between 6 months and 5 years.)*

Thomas L. Henderson
SIGNATURE OF PRINCIPAL EXECUTIVE OFFICER OR AUTHORIZED AGENT

TELEPHONE		DATE		
601	226-4584	97	11	20
AREA CODE	NUMBER	YEAR	MO	DAY

COMMENTS AND EXPLANATION OF ANY VIOLATIONS *(Reference all attachments here)*

NAME KOPPERS INDUSTRIES INC
ADDRESS P O BOX 160
TIE PLANT MS 38960

FACILITY LOCATION KOPPERS INDUSTRIES INC

ATTN: MR. RONALD MURPHEY

NATIONAL POLLUTANT DISCHARGE ELIMINATION SYSTEM (NPDES)
DISCHARGE MONITORING REPORT (DMR)

(2-16)	(17-19)
MSP090 300	001 A
PERMIT NUMBER	DISCHARGE NUMBER

TOTAL FACILITY DISCHARGE
(SUBF NC)
F - FINAL
MINCE

Form Approved.
OMB No. 2040-0004
Approval expires 05-31-98

MONITORING PERIOD	YEAR	MO	DAY		YEAR	MO	DAY
FROM	97	10	01	TO	97	10	31
	(20-21)	(22-23)	(24-25)		(26-27)	(28-29)	(30-31)

*** NO DISCHARGE |__| ***

NOTE: Read instructions before completing this form.

PARAMETER (32-37)		(3 Card Only) (46-53) QUANTITY OR LOADING (54-61) AVERAGE	MAXIMUM	UNITS	(4 Card Only) (38-45) QUANTITY OR CONCENTRATION (46-53) MINIMUM	(54-61) AVERAGE	MAXIMUM	UNITS	NO. EX (62-63)	FREQUENCY OF ANALYSIS (64-68)	SAMPLE TYPE (69-70)
BOD, 5-DAY (20 DEG. C) 00310 1 0 0 EFFLUENT GROSS VALUE	SAMPLE MEASUREMENT	.412	.570	(26)	******	3.45	4.05	(19)		1/7	24hc
	PERMIT REQUIREMENT	70 MO AVG	140 DAILY MX	LBS/DY	******	240 MO AVG	480 DAILY MX	MG/L		WEEKLY	COMP24
00400 1 0 0 EFFLUENT GROSS VALUE	SAMPLE MEASUREMENT	******	******		6.97	******	8.25	(12)		2/7	Grab
	PERMIT REQUIREMENT	******	******	****	5.5 MINIMUM	******	9.5 MAXIMUM	SU		MINCE/WEEK	GRAB
SOLIDS, TOTAL SUSPENDED 00530 1 0 0 EFFLUENT GROSS VALUE	SAMPLE MEASUREMENT	3.922	7.764	(26)	******	30.6	49	(19)		1/7	24hc
	PERMIT REQUIREMENT	34 MO AVG	175 DAILY MX	LBS/DY	******	300 MO AVG	600 DAILY MX	MG/L		WEEKLY	COMP24
OIL & GREASE (FREON EXTR.-IR METH) TOT,HC 00560 1 0 0 EFFLUENT GROSS VALUE	SAMPLE MEASUREMENT	.222	.270	(01) lbs	******	1.87	2.32	(19)		1/7	Grab
	PERMIT REQUIREMENT	REPORT MO AVG	29.2 DAILY MX	#/DAY	******	REPORT MO AVG	100 DAILY MX	MG/L		WEEKLY	GRAB
PENTACHLOROPHENOL 39032 1 0 0 EFFLUENT GROSS VALUE	SAMPLE MEASUREMENT	0	0	(01) lbs	******	0	0	(19)		1/7	Grab
	PERMIT REQUIREMENT	.053 MO AVG	.102 DAILY MX	#/DAY	******	.18 MO AVG	.36 DAILY MX	MG/L		WEEKLY	GRAB
PHENOLS 32730 1 0 0 EFFLUENT GROSS VALUE	SAMPLE MEASUREMENT	.0007	.0031	(01) lbs	******	.005	.02	(19)		1/7	Grab
	PERMIT REQUIREMENT	.08 MO AVG	1.75 DAILY MX	#/DAY	******	3 MO AVG	6 DAILY MX	MG/L		WEEKLY	GRAB
FLOW, IN CONDUIT OR THRU TREATMENT PLANT 50050 1 0 0 EFFLUENT GROSS VALUE	SAMPLE MEASUREMENT	.011	.023	(03)	******	******	******			Daily	Cont.
	PERMIT REQUIREMENT	REPORT MO AVG	0.035 DAILY MX	MGD	******	******	******	**** ****		DAILY	CONTIN

NAME/TITLE PRINCIPAL EXECUTIVE OFFICER

Thomas L. Henderson

TYPED OR PRINTED

I CERTIFY UNDER PENALTY OF LAW THAT I HAVE PERSONALLY EXAMINED AND AM FAMILIAR WITH THE INFORMATION SUBMITTED HEREIN; AND BASED ON MY INQUIRY OF THOSE INDIVIDUALS IMMEDIATELY RESPONSIBLE FOR OBTAINING THE INFORMATION, I BELIEVE THE SUBMITTED INFORMATION IS TRUE, ACCURATE AND COMPLETE. I AM AWARE THAT THERE ARE SIGNIFICANT PENALTIES FOR SUBMITTING FALSE INFORMATION, INCLUDING THE POSSIBILITY OF FINE AND IMPRISONMENT. SEE 18 U.S.C. § 1001 AND 33 U.S.C. § 1319. *(Penalties under these statutes may include fines up to $10,000 and or maximum imprisonment of between 6 months and 5 years.)*

Thomas L. Henderson

SIGNATURE OF PRINCIPAL EXECUTIVE OFFICER OR AUTHORIZED AGENT

TELEPHONE		DATE		
AREA CODE	NUMBER	YEAR	MO	DAY
601	226-4584	97	11	20

COMMENTS AND EXPLANATION OF ANY VIOLATIONS *(Reference all attachments here)*

EPA Form 3320-1 (08-95) Previous editions may be used. (REPLACES EPA FORM T-40 WHICH MAY NOT BE USED.)

00592/970128-1111

PAGE OF

NAME KOPPERS INDUSTRIES INC
ADDRESS P O BOX 160
TIE PLANT
MS 38960

Grenada

NATIONAL POLLUTANT DISCHARGE ELIMINATION SYSTEM (NPDES)
DISCHARGE MONITORING REPORT (DMR)

Form Approved.
OMB No. 2040-0004
Approval expires 05-31-98

PERMIT NUMBER (2-16)	DISCHARGE NUMBER (17-19)
MSP040300	001 &

TOTAL FACILITY DISCHARGE
(SUBR NC)
F - FINAL
MINCE
12345

TAT

FACILITY LOCATION KOPPERS INDUSTRIES INC
ATTN: MR. ~~HOWARD MURPHEY~~ Thomas L Henderson

MONITORING PERIOD	YEAR	MO	DAY
FROM	97	09	01
TO	97	09	30

(20-21) (22-23) (24-25) (26-27) (28-29) (30-31)

*** NO DISCHARGE | | ***

NOTE: Read instructions before completing this form.

PARAMETER (32-37)		QUANTITY OR LOADING (3 Card Only) (46-53) AVERAGE	(54-61) MAXIMUM	UNITS	QUANTITY OR CONCENTRATION (4 Card Only) (38-45) MINIMUM	(46-53) AVERAGE	(54-61) MAXIMUM	UNITS	NO. EX (62-63)	FREQUENCY OF ANALYSIS (64-68)	SAMPLE TYPE (69-70)
BOD, 5-DAY (20 DEG. C) 00310 1 0 0 EFFLUENT GROSS VALUE	SAMPLE MEASUREMENT	.1098	.499	(26)	******	1.03	3.15	(19)		1/7	24hc
	PERMIT REQUIREMENT	70 MO AVG	140 DAILY MX	LBS/DY	******	240 MO AVG	400 DAILY MX	MG/L		WEEKLY	COMP24
PH [redacted]00 1 0 0 EFFLUENT GROSS VALUE	SAMPLE MEASUREMENT	******	******		6.98	******	7.75	(12)		2/7	Grab
	PERMIT REQUIREMENT	******	******	** ** ***	5.5 MINIMUM	******	9.0 MAXIMUM	SU		DAILY MAX	GRAB
SOLIDS, TOTAL SUSPENDED 00530 1 0 0 EFFLUENT GROSS VALUE	SAMPLE MEASUREMENT	1.344	2.535	(26)	******	12.6	16	(19)		1/7	24hc
	PERMIT REQUIREMENT	68 MO AVG	175 DAILY MX	LBS/DY	******	300 MO AVG	600 DAILY MX	MG/L		WEEKLY	COMP24
OIL & GREASE (FREON EXTR.-IR METH) TOT, RO 00560 1 0 0 EFFLUENT GROSS VALUE	SAMPLE MEASUREMENT	.3169	.5878	(01)	******	3.14	3.71	(19)		1/7	Grab
	PERMIT REQUIREMENT	REPORT MO AVG	29.2 DAILY MX	lbs/DAY	******	REPORT MO AVG	100 DAILY MX	MG/L		WEEKLY	GRAB
PENTACHLOROPHENOL 39032 1 0 0 EFFLUENT GROSS VALUE	SAMPLE MEASUREMENT	0	0	(01)	******	0	0	(19)		1/7	Grab
	PERMIT REQUIREMENT	.053 MO AVG	.102 DAILY MX	lbs/DAY	******	.18 MO AVG	.36 DAILY MX	MG/L		WEEKLY	GRAB
PHENOLS [redacted]00 1 0 0 EFFLUENT GROSS VALUE	SAMPLE MEASUREMENT	0	0	(01)	******	0	0	(19)		1/7	Grab
	PERMIT REQUIREMENT	.88 MO AVG	1.75 DAILY MX	lbs/DAY	******	3 MO AVG	6 DAILY MX	MG/L		WEEKLY	GRAB
FLOW, IN CONDUIT OR THRU TREATMENT PLANT 50050 1 0 0 EFFLUENT GROSS VALUE	SAMPLE MEASUREMENT	.010	.020	(03)	******	******	******			Daily	Cont
	PERMIT REQUIREMENT	REPORT MO AVG	0.035 DAILY MX	MGD	******	******	******	**** ****		DAILY	CONTIN

NAME/TITLE PRINCIPAL EXECUTIVE OFFICER		TELEPHONE		DATE		
Thomas L. Henderson	I CERTIFY UNDER PENALTY OF LAW THAT I HAVE PERSONALLY EXAMINED AND AM FAMILIAR WITH THE INFORMATION SUBMITTED HEREIN; AND BASED ON MY INQUIRY OF THOSE INDIVIDUALS IMMEDIATELY RESPONSIBLE FOR OBTAINING THE INFORMATION, I BELIEVE THE SUBMITTED INFORMATION IS TRUE, ACCURATE AND COMPLETE. I AM AWARE THAT THERE ARE SIGNIFICANT PENALTIES FOR SUBMITTING FALSE INFORMATION, INCLUDING THE POSSIBILITY OF FINE AND IMPRISONMENT. SEE 18 U.S.C. § 1001 AND 33 U.S.C. § 1319. *(Penalties under these statutes may include fines up to $10,000 and or maximum imprisonment of between 6 months and 5 years.)*	Thomas L Henderson	601	226-4584	97	10	26
TYPED OR PRINTED		SIGNATURE OF PRINCIPAL EXECUTIVE OFFICER OR AUTHORIZED AGENT	AREA CODE	NUMBER	YEAR	MO	DAY

COMMENTS AND EXPLANATION OF ANY VIOLATIONS *(Reference all attachments here)*

NAME KOPPERS INDUSTRIES INC
ADDRESS P O BOX 160
TIE PLANT MS 38960

FACILITY KOPPERS INDUSTRIES INC
LOCATION
ATTN: ~~MR. RONALD MURPHEY~~ Thomas L. Henderson

NATIONAL POLLUTANT DISCHARGE ELIMINATION SYSTEM (NPDES)
DISCHARGE MONITORING REPORT (DMR)

(2-16)	(17-19)
MS P090 300	001 A
PERMIT NUMBER	DISCHARGE NUMBER

TOTAL FACILITY DISCHARGE
(SUBP BC) 12345
P - FINAL
MINOR

Form Approved.
OMB No. 2040-0004
Approval expires 05-31-98

MONITORING PERIOD	YEAR	MO	DAY		YEAR	MO	DAY
FROM	97	08	01	TO	97	08	31
	(20-21)	(22-23)	(24-25)		(26-27)	(28-29)	(30-31)

*** NO DISCHARGE |__| ***

NOTE: Read instructions before completing this form.

PARAMETER (32-37)		QUANTITY OR LOADING (3 Card Only) (46-53) AVERAGE	(54-61) MAXIMUM	UNITS	QUANTITY OR CONCENTRATION (4 Card Only) (38-45) MINIMUM	(46-53) AVERAGE	(54-61) MAXIMUM	UNITS	NO. EX (62-63)	FREQUENCY OF ANALYSIS (64-68)	SAMPLE TYPE (69-70)
BOD, 5-DAY (20 DEG. C) 00310 1 0 0 EFFLUENT GROSS VALUE	SAMPLE MEASUREMENT	2.218	4.88	(26)	******	13.0	18.3	(19)	*1	1/7	24 hr
	PERMIT REQUIREMENT	70 MO AVG	140 DAILY MX	LBS/DY	******	240 MO AVG	480 DAILY MX	MG/L		WEEKLY	COMP24
PH 00400 1 0 0 EFFLUENT GROSS VALUE	SAMPLE MEASUREMENT	******	******		7.46	******	7.70	(12)		2/7	Grab
	PERMIT REQUIREMENT	******	******	****	6.5 MINIMUM	******	9.0 MAXIMUM	SU		DAILY/WEEK	GRAB
SOLIDS, TOTAL SUSPENDED 00530 1 0 0 EFFLUENT GROSS VALUE	SAMPLE MEASUREMENT	3.600	9.073	(26)	******	23.25	34	(19)		1/7	24 hr
	PERMIT REQUIREMENT	86 MO AVG	175 DAILY MX	LBS/DY	******	300 MO AVG	600 DAILY MX	MG/L		WEEKLY	COMP24
OIL & GREASE (FREON EXTR.-IR METH) TOT, MO 00560 1 0 0 EFFLUENT GROSS VALUE	SAMPLE MEASUREMENT	.352	.759	(01)	******	2.622	2.84	(19)		1/7	Grab
	PERMIT REQUIREMENT	REPORT MO AVG	29.2 DAILY MX	lbs/DAY	******	REPORT MO AVG	100 DAILY MX	MG/L		WEEKLY	GRAB
PENTACHLOROPHENOL 39032 1 0 0 EFFLUENT GROSS VALUE	SAMPLE MEASUREMENT	0	0	(01)	******	0	0	(19)		1/7	Grab
	PERMIT REQUIREMENT	.053 MO AVG	.102 DAILY MX	lbs/DAY	******	.18 MO AVG	.36 DAILY MX	MG/L		WEEKLY	GRAB
PHENOLS 34000 1 0 0 EFFLUENT GROSS VALUE	SAMPLE MEASUREMENT	.0055	.0144	(01)	******	.031	.071	(19)		1/7	Grab
	PERMIT REQUIREMENT	.88 MO AVG	1.75 DAILY MX	lbs/DAY	******	3 MO AVG	6 DAILY MX	MG/L		WEEKLY	GRAB
FLOW, IN CONDUIT OR THRU TREATMENT PLANT 50050 1 0 0 EFFLUENT GROSS VALUE	SAMPLE MEASUREMENT	.014	.032	(03)	******	******	******			Daily	Cont
	PERMIT REQUIREMENT	REPORT MO AVG	0.035 DAILY MX	MGD	******	******	******	**** ****		DAILY	CONTIN

NAME/TITLE PRINCIPAL EXECUTIVE OFFICER		TELEPHONE		DATE		
Thomas L. Henderson		601	2264589	97	09	25
TYPED OR PRINTED		AREA CODE	NUMBER	YEAR	MO	DAY

I CERTIFY UNDER PENALTY OF LAW THAT I HAVE PERSONALLY EXAMINED AND AM FAMILIAR WITH THE INFORMATION SUBMITTED HEREIN; AND BASED ON MY INQUIRY OF THOSE INDIVIDUALS IMMEDIATELY RESPONSIBLE FOR OBTAINING THE INFORMATION, I BELIEVE THE SUBMITTED INFORMATION IS TRUE, ACCURATE AND COMPLETE. I AM AWARE THAT THERE ARE SIGNIFICANT PENALTIES FOR SUBMITTING FALSE INFORMATION, INCLUDING THE POSSIBILITY OF FINE AND IMPRISONMENT. SEE 18 U.S.C. § 1001 AND 33 U.S.C. § 1319. *(Penalties under these statutes may include fines up to $10,000 and or maximum imprisonment of between 6 months and 5 years.)*

Thomas L. Henderson
SIGNATURE OF PRINCIPAL EXECUTIVE OFFICER OR AUTHORIZED AGENT

COMMENTS AND EXPLANATION OF ANY VIOLATIONS *(Reference all attachments here)*

*1 BoD sample for week of 8-5-97 was invalid Due to Laboratory Error - see attached Letter

EPA Form 3320-1 (08-95) Previous editions may be used. (REPLACES EPA FORM T-40 WHICH MAY NOT BE USED.)

00590/970128-1111

NAME: KOPPERS INDUSTRIES INC
ADDRESS: P O BOX 160
TIE PLANT MS 38960

Tie Grenada

NATIONAL POLLUTANT DISCHARGE ELIMINATION SYSTEM (NPDES)
DISCHARGE MONITORING REPORT (DMR)
(2-16) (17-19)

MSP090 300 — PERMIT NUMBER
001 A — DISCHARGE NUMBER

TOTAL FACILITY DISCHARGE
(SUBR NO) 12345
F - FINAL
MINOR

Form Approved.
OMB No. 2040-0004
Approval expires 05-31-98

FACILITY LOCATION: KOPPERS INDUSTRIES INC
ATTN: MR. RONALD MURPHEY

MONITORING PERIOD

	YEAR	MO	DAY		YEAR	MO	DAY
FROM	97	07	01	TO	97	07	31
	(20-21)	(22-23)	(24-25)		(26-27)	(28-29)	(30-31)

*** NO DISCHARGE | | ***

NOTE: Read instructions before completing this form.

PARAMETER (32-37)		(3 Card Only) (46-53) QUANTITY OR LOADING (54-61) AVERAGE	MAXIMUM	UNITS	(4 Card Only) (38-45) QUANTITY OR CONCENTRATION (46-53) MINIMUM	(54-61) AVERAGE	MAXIMUM	UNITS	NO. EX (62-63)	FREQUENCY OF ANALYSIS (64-68)	SAMPLE TYPE (69-70)
BOD, 5-DAY (20 DEG. C) 00310 1 0 0 EFFLUENT GROSS VALU	SAMPLE MEASUREMENT	.6774	1.936	(26) LBS/DY	******	6.06	17.4	(19) MG/L		1/7	24HC
	PERMIT REQUIREMENT	70 MO AVG	140 DAILY MX		******	40 MO AVG	80 DAILY MX			WEEKLY	COMP24
PH 00400 1 0 0 EFFLUENT GROSS VALU	SAMPLE MEASUREMENT	******	******		7.42	******	8.55	(12) SU		2/7	Grab
	PERMIT REQUIREMENT	******	******	*****	5.5 MINIMUM	******	9.5 MAXIMUM			1/WEEK	GRAB
SOLIDS, TOTAL SUSPENDED 00530 1 0 0 EFFLUENT GROSS VALU	SAMPLE MEASUREMENT	1.525	3.152	(26) LBS/DY	******	19.6	41	(19) MG/L		1/7	24HC
	PERMIT REQUIREMENT	88 MO AVG	175 DAILY MX		******	30 MO AVG	60 DAILY MX			WEEKLY	COMP24
OIL & GREASE (FREON EXTN.-IR METH) TOT, RE 00560 1 0 0 EFFLUENT GROSS VALU	SAMPLE MEASUREMENT	.2242	.510	(01) lbs DAY	******	2.48	3.40	(19) MG/L		1/7	Grab
	PERMIT REQUIREMENT	REPORT MO AVG	29.2 DAILY MX		******	REPORT MO AVG	100 DAILY MX			WEEKLY	GRAB
PENTACHLOROPHENOL 39032 1 0 0 EFFLUENT GROSS VALU	SAMPLE MEASUREMENT	.0002	.0006	(01) lbs DAY	******	.0038	.008	(19) MG/L		1/7	Grab
	PERMIT REQUIREMENT	.053 MO AVG	.102 DAILY MX		******	.18 MO AVG	.36 DAILY MX			WEEKLY	GRAB
PHENOLS 32730 1 0 0 EFFLUENT GROSS VALU	SAMPLE MEASUREMENT	.0012	.0036	(01) lbs DAY	******	.002	.062	(19) MG/L		1/7	Grab
	PERMIT REQUIREMENT	.88 MO AVG	1.75 DAILY MX		******	3 MO AVG	6 DAILY MX			WEEKLY	GRAB
FLOW, IN CONDUIT OR THRU TREATMENT PLANT 50050 1 0 0 EFFLUENT GROSS VALU	SAMPLE MEASUREMENT	.008	.018	(03) MGD	******	******	******	**** ****		Daily	Cont
	PERMIT REQUIREMENT	REPORT MO AVG	0.035 DAILY MX		******	******	******			DAILY	CONTIN

NAME/TITLE PRINCIPAL EXECUTIVE OFFICER: Thomas L. Henderson
TYPED OR PRINTED

I CERTIFY UNDER PENALTY OF LAW THAT I HAVE PERSONALLY EXAMINED AND AM FAMILIAR WITH THE INFORMATION SUBMITTED HEREIN; AND BASED ON MY INQUIRY OF THOSE INDIVIDUALS IMMEDIATELY RESPONSIBLE FOR OBTAINING THE INFORMATION, I BELIEVE THE SUBMITTED INFORMATION IS TRUE, ACCURATE AND COMPLETE. I AM AWARE THAT THERE ARE SIGNIFICANT PENALTIES FOR SUBMITTING FALSE INFORMATION, INCLUDING THE POSSIBILITY OF FINE AND IMPRISONMENT. SEE 18 U.S.C. § 1001 AND 33 U.S.C. § 1319. *(Penalties under these statutes may include fines up to $10,000 and or maximum imprisonment of between 6 months and 5 years.)*

Thomas L. Henderson
SIGNATURE OF PRINCIPAL EXECUTIVE OFFICER OR AUTHORIZED AGENT

TELEPHONE		DATE		
AREA CODE	NUMBER	YEAR	MO	DAY
601	226-4584	97	08	25

COMMENTS AND EXPLANATION OF ANY VIOLATIONS *(Reference all attachments here)*

PERMITTEE NAME/ADDRESS (Include Facility Name/Location if Different)

NAME: ROPERS INDUSTRIES INC

ADDRESS: P O BOX 160
TIE PLANT MS 38960

File Grenada

FACILITY LOCATION: ROPERS INDUSTRIES INC

ATTN: MR. RONALD MURPHEY

NATIONAL POLLUTANT DISCHARGE ELIMINATION SYSTEM (NPDES)
DISCHARGE MONITORING REPORT (DMR)

Form Approved. OMB No. 2040-0004 Approval expires 05-31-98

PERMIT NUMBER (2-16)	DISCHARGE NUMBER (17-19)
MS0090 30C	C01 A

TOTAL FACILITY DISCHARGE
(SUBA NC) 1234E
F - FINAL
MINOR

TAT

*** NO DISCHARGE |__| ***

NOTE: Read instructions before completing this form.

MONITORING PERIOD	YEAR	MO	DAY		YEAR	MO	DAY
FROM	97	06	01	TO	97	06	30
	(20-21)	(22-23)	(24-25)		(26-27)	(28-29)	(30-31)

PARAMETER (32-37)		QUANTITY OR LOADING (3 Card Only) (46-53) AVERAGE	(54-61) MAXIMUM	UNITS	QUANTITY OR CONCENTRATION (4 Card Only) (38-45) MINIMUM	(46-53) AVERAGE	(54-61) MAXIMUM	UNITS	NO. EX (62-63)	FREQUENCY OF ANALYSIS (64-68)	SAMPLE TYPE (69-70)
BOD, 5-DAY (20 DEG. C) 00310 1 0 0 EFFLUENT GROSS VALUE	SAMPLE MEASUREMENT	.2432	.7380	(26)	******	5.125	17.7	(19)		1/7	24hc
	PERMIT REQUIREMENT	70 MO AVG	140 DAILY MX	LBS/DY	******	240 MO AVG	480 DAILY MX	MG/L		WEEKLY	COMP24
PH 00400 1 0 0 EFFLUENT GROSS VALUE	SAMPLE MEASUREMENT	******	******		7.68	******	8.60	(12)		2/7	Grab
	PERMIT REQUIREMENT	******	******	** ** * ***	5.5 MINIMUM	******	9.5 MAXIMUM	SU		TWICE/WEEK	GRAB
SOLIDS, TOTAL SUSPENDED 00530 1 0 0 EFFLUENT GROSS VALUE	SAMPLE MEASUREMENT	2.820	4.795	(26)	******	27.5	47	(19)		1/7	24hc
	PERMIT REQUIREMENT	28 MO AVG	175 DAILY MX	LBS/DY	******	300 MO AVG	600 DAILY MX	MG/L		WEEKLY	COMP24
OIL & GREASE (FREON EXTR.-IR METH) TOT, RC 00560 1 0 0 EFFLUENT GROSS VALUE	SAMPLE MEASUREMENT	.0758	.1401	(01) lbs	******	.55	.80	(19)		1/7	Grab
	PERMIT REQUIREMENT	REPORT MO AVG	29.2 DAILY MX	KG/DAY	******	REPORT MO AVG	100 DAILY MX	MG/L		WEEKLY	GRAB
PENTACHLOROPHENOL 39032 1 0 0 EFFLUENT GROSS VALUE	SAMPLE MEASUREMENT	.0004	.0013	(01) lbs	******	.005	.008	(19)		1/7	Grab
	PERMIT REQUIREMENT	.053 MO AVG	.102 DAILY MX	KG/DAY	******	.10 MO AVG	.20 DAILY MX	MG/L		WEEKLY	GRAB
PHENOLS 34000 1 0 0 EFFLUENT GROSS VALUE	SAMPLE MEASUREMENT	.0035	.007	(01) lbs	******	.02	.04	(19)		1/7	Grab
	PERMIT REQUIREMENT	.66 MO AVG	1.75 DAILY MX	KG/DAY	******	3 MO AVG	6 DAILY MX	MG/L		WEEKLY	GRAB
FLOW, IN CONDUIT OR THRU TREATMENT PLANT 50050 1 0 0 EFFLUENT GROSS VALUE	SAMPLE MEASUREMENT	.013	.030	(03)	******	******	******			Daily	Cont.
	PERMIT REQUIREMENT	REPORT MO AVG	0.035 DAILY MX	MGD	******	******	******	**** ****		DAILY	CONTIN

NAME/TITLE PRINCIPAL EXECUTIVE OFFICER: Thomas L. Henderson
TYPED OR PRINTED

I CERTIFY UNDER PENALTY OF LAW THAT I HAVE PERSONALLY EXAMINED AND AM FAMILIAR WITH THE INFORMATION SUBMITTED HEREIN; AND BASED ON MY INQUIRY OF THOSE INDIVIDUALS IMMEDIATELY RESPONSIBLE FOR OBTAINING THE INFORMATION, I BELIEVE THE SUBMITTED INFORMATION IS TRUE, ACCURATE AND COMPLETE. I AM AWARE THAT THERE ARE SIGNIFICANT PENALTIES FOR SUBMITTING FALSE INFORMATION, INCLUDING THE POSSIBILITY OF FINE AND IMPRISONMENT. SEE 18 U.S.C. § 1001 AND 33 U.S.C. § 1319. *(Penalties under these statutes may include fines up to $10,000 and or maximum imprisonment of between 6 months and 5 years.)*

Thomas L. Henderson
SIGNATURE OF PRINCIPAL EXECUTIVE OFFICER OR AUTHORIZED AGENT

TELEPHONE		DATE		
601	226-4584	97	07	21
AREA CODE	NUMBER	YEAR	MO	DAY

COMMENTS AND EXPLANATION OF ANY VIOLATIONS *(Reference all attachments here)*

PERMITTEE NAME/ADDRESS (Include Facility Name/ Location if Different)

NAME: KOPPERS INDUSTRIES INC

ADDRESS: P O BOX 160
TIE PLANT MS 38960

Tie Grenada

FACILITY LOCATION: KOPPERS INDUSTRIES INC

ATTN: MR. RONALD MORPHEY

NATIONAL POLLUTANT DISCHARGE ELIMINATION SYSTEM (NPDES)
DISCHARGE MONITORING REPORT (DMR)
(2-16) (17-19)

MS0090300 — PERMIT NUMBER

001 A — DISCHARGE NUMBER

TOTAL FACILITY DISCHARGE (SUBR NC) F - FINAL MINCE 12345

LAP

Form Approved.
OMB No. 2040-0004
Approval expires 05-31-98

MONITORING PERIOD	YEAR	MO	DAY		YEAR	MO	DAY
FROM	97	05	01	TO	97	05	31
	(20-21)	(22-23)	(24-25)		(26-27)	(28-29)	(30-31)

*** NO DISCHARGE | __ | ***

NOTE: Read instructions before completing this form.

PARAMETER (32-37)		(3 Card Only) (46-53) QUANTITY OR LOADING (54-61) AVERAGE	MAXIMUM	UNITS	(4 Card Only) (38-45) QUANTITY OR CONCENTRATION (46-53) MINIMUM	(54-61) AVERAGE	MAXIMUM	UNITS	NO. EX (62-63)	FREQUENCY OF ANALYSIS (64-68)	SAMPLE TYPE (69-70)
BOD, 5-DAY (20 DEG. C) 00310 1 0 0 EFFLUENT GROSS VALUE	SAMPLE MEASUREMENT	.5973	1.052	(26)	******	2.9375	4.35	(19)		1/7	24hc
	PERMIT REQUIREMENT	70 MO AVG	140 DAILY MX	LBS/DY	******	240 MO AVG	480 DAILY MX	MG/L		WEEKLY	CONT24
PH 00400 1 0 0 EFFLUENT GROSS VALUE	SAMPLE MEASUREMENT	******	******		7.40	******	7.81	(12)		2/7	Grab
	PERMIT REQUIREMENT	******	******	** ** * ***	5.5 MINIMUM	******	9.5 MAXIMUM	SU		TWICE/WEEK	GRAB
SOLIDS, TOTAL SUSPENDED 00530 1 0 0 EFFLUENT GROSS VALUE	SAMPLE MEASUREMENT	3.085	3.753	(26)	******	18	30	(19)		1/7	24hc
	PERMIT REQUIREMENT	88 MO AVG	175 DAILY MX	LBS/DY	******	300 MO AVG	600 DAILY MX	MG/L		WEEKLY	CONT24
OIL & GREASE (FREON EXTR.-IR METH) TOT, RC 00560 1 0 0 EFFLUENT GROSS VALUE	SAMPLE MEASUREMENT	.1590	.4111	(01) lbs/DAY	******	.675	1.7	(19)		1/7	Grab
	PERMIT REQUIREMENT	REPORT MO AVG	29.2 DAILY MX		******	REPORT MO AVG	100 DAILY MX	MG/L		WEEKLY	GRAB
PENTACHLOROPHENOL 39032 1 0 0 EFFLUENT GROSS VALUE	SAMPLE MEASUREMENT	.0006	.0016	(01) lbs/DAY	******	.003	.007	(19)		1/7	Grab
	PERMIT REQUIREMENT	.053 MO AVG	.102 DAILY MX		******	.16 MO AVG	.36 DAILY MX	MG/L		WEEKLY	GRAB
PHENOLS 34000 1 0 0 EFFLUENT GROSS VALUE	SAMPLE MEASUREMENT	0	0	(01) lbs/DAY	******	0	0	(19)		1/7	Grab
	PERMIT REQUIREMENT	.88 MO AVG	1.75 DAILY MX		******	3 MO AVG	6 DAILY MX	MG/L		WEEKLY	GRAB
FLOW, IN CONDUIT OR THRU TREATMENT PLANT 50050 1 0 0 EFFLUENT GROSS VALUE	SAMPLE MEASUREMENT	.016	.029	(03)	******	******	******			Daily	Cont.
	PERMIT REQUIREMENT	REPORT MO AVG	0.035 DAILY MX	MGD	******	******	******	**** ****		DAILY	CONTIN

NAME/TITLE PRINCIPAL EXECUTIVE OFFICER		TELEPHONE		DATE		
Thomas L. Henderson	I CERTIFY UNDER PENALTY OF LAW THAT I HAVE PERSONALLY EXAMINED AND AM FAMILIAR WITH THE INFORMATION SUBMITTED HEREIN; AND BASED ON MY INQUIRY OF THOSE INDIVIDUALS IMMEDIATELY RESPONSIBLE FOR OBTAINING THE INFORMATION, I BELIEVE THE SUBMITTED INFORMATION IS TRUE, ACCURATE AND COMPLETE. I AM AWARE THAT THERE ARE SIGNIFICANT PENALTIES FOR SUBMITTING FALSE INFORMATION, INCLUDING THE POSSIBILITY OF FINE AND IMPRISONMENT. SEE 18 U.S.C. § 1001 AND 33 U.S.C. § 1319. (Penalties under these statutes may include fines up to $10,000 and or maximum imprisonment of between 6 months and 5 years.)	Thomas L. Henderson	601	226-4581	97	06	25
TYPED OR PRINTED		SIGNATURE OF PRINCIPAL EXECUTIVE OFFICER OR AUTHORIZED AGENT	AREA CODE	NUMBER	YEAR	MO	DAY

COMMENTS AND EXPLANATION OF ANY VIOLATIONS (Reference all attachments here)

NAME KOPPERS INDUSTRIES INC
ADDRESS P O BOX 160
TIE PLANT MS 38960

FACILITY LOCATION KOPPERS INDUSTRIES INC
ATTN: MR. RONALD MURPHEY

MAY 1997 Received OPC

NATIONAL POLLUTANT DISCHARGE ELIMINATION SYSTEM (NPDES)
DISCHARGE MONITORING REPORT (DMR)

PERMIT NUMBER (2-16)	DISCHARGE NUMBER (17-19)
MSP090300	001 Y

TOTAL FACILITY DISCHARGE
(SUBR NC) 12345
F - FINAL
MINCE

Form Approved.
OMB No. 2040-0004
Approval expires 05-31-98

MONITORING PERIOD	YEAR	MO	DAY		YEAR	MO	DAY
FROM	97	01	01	TO	97	05	30
	(20-21)	(22-23)	(24-25)		(26-27)	(28-29)	(30-31)

*** NO DISCHARGE | | ***

NOTE: Read instructions before completing this form.

PARAMETER (32-37)		QUANTITY OR LOADING (3 Card Only) (46-53) AVERAGE	(54-61) MAXIMUM	UNITS	QUANTITY OR CONCENTRATION (4 Card Only) (38-45) MINIMUM	(46-53) AVERAGE	(54-61) MAXIMUM	UNITS	NO. EX (62-63)	FREQUENCY OF ANALYSIS (64-68)	SAMPLE TYPE (69-70)
ARSENIC, TOTAL RECOVERABLE 00978 1 0 0 EFFLUENT GROSS VALUE	SAMPLE MEASUREMENT	0	0	(26)	******	0	0	(19)		Semi Annual	24hc
	PERMIT REQUIREMENT	REPORT ANNL AVG	0.131 ANNL MAX	LBS/DY	******	REPORT ANNL AVG	.45 ANNL MAX	MG/L		SEMI-ANNUAL	CCMP24
CHROMIUM TOTAL RECOVERABLE 01118 1 0 0 EFFLUENT GROSS VALUE	SAMPLE MEASUREMENT	.001	.001	(26)	******	.01	.01	(19)		Semi Annual	24hc
	PERMIT REQUIREMENT	REPORT ANNL AVG	1.160 ANNL MAX	LBS/DY	******	REPORT ANNL AVG	4.0 ANNL MAX	MG/L		SEMI-ANNUAL	CCMP24
COPPER TOTAL RECOVERABLE 01119 1 0 0 EFFLUENT GROSS VALUE	SAMPLE MEASUREMENT	.0042	.0042	(26)	******	.039	.039	(19)		Semi Annual	24hc
	PERMIT REQUIREMENT	REPORT ANNL AVG	0.642 ANNL MAX	LBS/DY	******	REPORT ANNL AVG	2.2 ANNL MAX	MG/L		SEMI-ANNUAL	CCMP24
	SAMPLE MEASUREMENT										
	PERMIT REQUIREMENT										
	SAMPLE MEASUREMENT										
	PERMIT REQUIREMENT										
	SAMPLE MEASUREMENT										
	PERMIT REQUIREMENT										
	SAMPLE MEASUREMENT										
	PERMIT REQUIREMENT										

NAME/TITLE PRINCIPAL EXECUTIVE OFFICER
Thomas L. Henderson
TYPED OR PRINTED

I CERTIFY UNDER PENALTY OF LAW THAT I HAVE PERSONALLY EXAMINED AND AM FAMILIAR WITH THE INFORMATION SUBMITTED HEREIN; AND BASED ON MY INQUIRY OF THOSE INDIVIDUALS IMMEDIATELY RESPONSIBLE FOR OBTAINING THE INFORMATION, I BELIEVE THE SUBMITTED INFORMATION IS TRUE, ACCURATE AND COMPLETE. I AM AWARE THAT THERE ARE SIGNIFICANT PENALTIES FOR SUBMITTING FALSE INFORMATION, INCLUDING THE POSSIBILITY OF FINE AND IMPRISONMENT. SEE 18 U.S.C. § 1001 AND 33 U.S.C. § 1319. *(Penalties under these statutes may include fines up to $10,000 and or maximum imprisonment of between 6 months and 5 years.)*

Thomas L Henderson
SIGNATURE OF PRINCIPAL EXECUTIVE OFFICER OR AUTHORIZED AGENT

TELEPHONE		DATE		
601	226-4584	97	05	15
AREA CODE	NUMBER	YEAR	MO	DAY

COMMENTS AND EXPLANATION OF ANY VIOLATIONS *(Reference all attachments here)*

NAME KOPPERS INDUSTRIES INC
ADDRESS P.O. BOX 170
TIE PLANT MS 38960

FACILITY LOCATION KOPPERS INDUSTRIES INC
ATTN: MR. ROBERT DOLBY

NATIONAL POLLUTANT DISCHARGE ELIMINATION SYSTEM (NPDES)
DISCHARGE MONITORING REPORT (DMR)

(2-16)	(17-19)
MS2090300	001 A
PERMIT NUMBER	DISCHARGE NUMBER

TOTAL FACILITY DISCHARGE
(SUBA NC) 12345
F - FINAL
PICK

Form Approved.
OMB No. 2040-0004
Approval expires 05-31-98

MONITORING PERIOD	YEAR	MO	DAY		YEAR	MO	DAY
FROM	97	04	01	TO	97	04	30
	(20-21)	(22-23)	(24-25)		(26-27)	(28-29)	(30-31)

*** NO DISCHARGE |__| ***

NOTE: Read instructions before completing this form.

PARAMETER (32-37)		(3 Card Only) (46-53) QUANTITY OR LOADING (54-61) AVERAGE	MAXIMUM	UNITS	(4 Card Only) (38-45) QUANTITY OR CONCENTRATION (46-53) MINIMUM	(54-61) AVERAGE	MAXIMUM	UNITS	NO. EX (62-63)	FREQUENCY OF ANALYSIS (64-68)	SAMPLE TYPE (69-70)
BOD, 5-DAY (20 DEG. C) 00310 1 0 0 EFFLUENT GROSS VALUE	SAMPLE MEASUREMENT	~~.244~~ .248	.390	(26)	******	8.52	15.9	(19)		1/7	24hr
	PERMIT REQUIREMENT	70 MO AVG	140 DAILY MX	LBS/DY	******	240 MO AVG	480 DAILY MX	MG/L		DAILY	COMP
00400 1 0 0 EFFLUENT GROSS VALUE	SAMPLE MEASUREMENT	******	******		7.6	******	8.15	(12)		2/7	Grab
	PERMIT REQUIREMENT	******	******	*****	6.5 MINIMUM	******	9.5 MAXIMUM	SU		WEEKLY	GRAB
SOLIDS, TOTAL SUSPENDED 00530 1 0 0 EFFLUENT GROSS VALUE	SAMPLE MEASUREMENT	2.881	6.179	(26)	******	45.4	79	(19)		1/7	24hr
	PERMIT REQUIREMENT	88 MO AVG	175 DAILY MX	LBS/DY	******	300 MO AVG	600 DAILY MX	MG/L		DAILY	COMP
OIL & GREASE (FREON EXTN.-IR METH) TOT,RC 00560 1 0 0 EFFLUENT GROSS VALUE	SAMPLE MEASUREMENT	.0175	.0875	(01)	******	.42	2.1	(19)		1/7	Grab
	PERMIT REQUIREMENT	REPORT MO AVG	29.2 DAILY MX	lbs DAY	******	REPORT MO AVG	100 DAILY MX	MG/L		WEEKLY	GRAB
PENTACHLOROPHENOL 39032 1 0 0 EFFLUENT GROSS VALUE	SAMPLE MEASUREMENT	.0001	.0007	(01)	******	.0032	.016	(19)		1/7	Grab
	PERMIT REQUIREMENT	.053 MO AVG	.102 DAILY MX	lbs DAY	******	.18 MO AVG	.36 DAILY MX	MG/L		WEEKLY	GRAB
PHENOLS 48000 1 0 0 EFFLUENT GROSS VALUE	SAMPLE MEASUREMENT	.0022	.0054	(01)	******	.0534	.091	(19)		1/7	Grab
	PERMIT REQUIREMENT	.06 MO AVG	1.15 DAILY MX	lbs DAY	******	3 MO AVG	6 DAILY MX	MG/L		WEEKLY	GRAB
FLOW, IN CONDUIT OR THRU TREATMENT PLANT 50050 1 0 0 EFFLUENT GROSS VALUE	SAMPLE MEASUREMENT	.007	.016	(03)	******	******	******			Daily	Contin.
	PERMIT REQUIREMENT	REPORT MO AVG	0.035 DAILY MX	MGD	******	******	******	**** ****		DAILY	CONTIN

NAME/TITLE PRINCIPAL EXECUTIVE OFFICER

Thomas L. Henderson
TYPED OR PRINTED

I CERTIFY UNDER PENALTY OF LAW THAT I HAVE PERSONALLY EXAMINED AND AM FAMILIAR WITH THE INFORMATION SUBMITTED HEREIN; AND BASED ON MY INQUIRY OF THOSE INDIVIDUALS IMMEDIATELY RESPONSIBLE FOR OBTAINING THE INFORMATION, I BELIEVE THE SUBMITTED INFORMATION IS TRUE, ACCURATE AND COMPLETE. I AM AWARE THAT THERE ARE SIGNIFICANT PENALTIES FOR SUBMITTING FALSE INFORMATION, INCLUDING THE POSSIBILITY OF FINE AND IMPRISONMENT. SEE 18 U.S.C. § 1001 AND 33 U.S.C. § 1319. *(Penalties under these statutes may include fines up to $10,000 and or maximum imprisonment of between 6 months and 5 years.)*

Thomas L. Henderson
SIGNATURE OF PRINCIPAL EXECUTIVE OFFICER OR AUTHORIZED AGENT

TELEPHONE		DATE		
AREA CODE	NUMBER	YEAR	MO	DAY
601	2264584	97	05	15

COMMENTS AND EXPLANATION OF ANY VIOLATIONS *(Reference all attachments here)*

NAME KOPPERS INDUSTRIES INC
ADDRESS P O BOX 160
TIE PLANT MS 38960

FILE GRENADA

NATIONAL POLLUTANT DISCHARGE ELIMINATION SYSTEM (NPDES)
DISCHARGE MONITORING REPORT (DMR)
(2-16) (17-19)

MS0090300 — PERMIT NUMBER
001 A — DISCHARGE NUMBER

TOTAL FACILITY DISCHARGE
(SUBR NC) 12345
F - FINAL
MINOR

Form Approved.
OMB No. 2040-0004
Approval expires 05-31-98

FACILITY LOCATION KOPPERS INDUSTRIES INC

ATTN: MR. RONALD MURPHEY

MONITORING PERIOD	YEAR	MO	DAY		YEAR	MO	DAY
FROM	97	03	01	TO	97	03	31
	(20-21)	(22-23)	(24-25)		(26-27)	(28-29)	(30-31)

*** NO DISCHARGE | | ***

NOTE: Read instructions before completing this form.

PARAMETER (32-37)		(3 Card Only) (46-53) QUANTITY OR LOADING (54-61) AVERAGE	MAXIMUM	UNITS	(4 Card Only) (38-45) QUANTITY OR CONCENTRATION (46-53) MINIMUM	AVERAGE	(54-61) MAXIMUM	UNITS	NO. EX (62-63)	FREQUENCY OF ANALYSIS (64-68)	SAMPLE TYPE (69-70)
BOD, 5-DAY (20 DEG. C) 00310 1 0 0 EFFLUENT GROSS VALUE	SAMPLE MEASUREMENT	3.396	7.075	(26)	******	17.775	33.0	(19)		1/7	24hc
	PERMIT REQUIREMENT	10 MO AVG	140 DAILY MX	LBS/DY	******	240 MO AVG	460 DAILY MX	MG/L		WEEKLY	CCMP24
00400 1 0 0 EFFLUENT GROSS VALUE	SAMPLE MEASUREMENT	******	******		7.62	******	8.4	(12)		2/7	Grab
	PERMIT REQUIREMENT	******	******	** ** * ***	5.0 MINIMUM	******	9.5 MAXIMUM	SU		TWICE/WEEK	GRAB
SOLIDS, TOTAL SUSPENDED 00530 1 0 0 EFFLUENT GROSS VALUE	SAMPLE MEASUREMENT	6.938	23.025	(26)	******	35.65	98.6	(19)		1/7	24hc
	PERMIT REQUIREMENT	30 MO AVG	175 DAILY MX	LBS/DY	******	300 MO AVG	600 DAILY MX	MG/L		WEEKLY	CCMP24
OIL & GREASE (FREON EXTR.-IR METH) TOT, BC 00560 1 0 0 EFFLUENT GROSS VALUE	SAMPLE MEASUREMENT	2.072	8.289	(01)	******	8.875	35.50	(19)		1/7	Grab
	PERMIT REQUIREMENT	REPORT MO AVG	29.2 DAILY MX	lbs/DAY	******	REPORT MO AVG	100 DAILY MX	MG/L		WEEKLY	GRAB
PENTACHLOROPHENOL 39032 1 0 0 EFFLUENT GROSS VALUE	SAMPLE MEASUREMENT	.00012	.0005	(01)	******	.001	.004	(19)		1/7	Grab
	PERMIT REQUIREMENT	.053 MO AVG	.102 DAILY MX	lbs/DAY	******	.18 MO AVG	.36 DAILY MX	MG/L		WEEKLY	GRAB
PHENOLS 46000 1 0 0 EFFLUENT GROSS VALUE	SAMPLE MEASUREMENT	.0165	.0604	(01)	******	.0797	.259	(19)		1/7	Grab
	PERMIT REQUIREMENT	.88 MO AVG	1.75 DAILY MX	lbs/DAY	******	3 MO AVG	6 DAILY MX	MG/L		WEEKLY	GRAB
FLOW, IN CONDUIT OR THRU TREATMENT PLANT 50050 1 0 0 EFFLUENT GROSS VALUE	SAMPLE MEASUREMENT	.017	.033	(03)	******	******	******			Daily	Cont.
	PERMIT REQUIREMENT	REPORT MO AVG	0.035 DAILY MX	MGD	******	******	******	**** ****		DAILY	CONTIN

NAME/TITLE PRINCIPAL EXECUTIVE OFFICER		TELEPHONE		DATE		
Thomas L. Henderson	I CERTIFY UNDER PENALTY OF LAW THAT I HAVE PERSONALLY EXAMINED AND AM FAMILIAR WITH THE INFORMATION SUBMITTED HEREIN; AND BASED ON MY INQUIRY OF THOSE INDIVIDUALS IMMEDIATELY RESPONSIBLE FOR OBTAINING THE INFORMATION, I BELIEVE THE SUBMITTED INFORMATION IS TRUE, ACCURATE AND COMPLETE. I AM AWARE THAT THERE ARE SIGNIFICANT PENALTIES FOR SUBMITTING FALSE INFORMATION, INCLUDING THE POSSIBILITY OF FINE AND IMPRISONMENT. SEE 18 U.S.C. § 1001 AND 33 U.S.C. § 1319. *(Penalties under these statutes may include fines up to $10,000 and or maximum imprisonment of between 6 months and 5 years.)*	Thomas L. Henderson	601	226-4588	97	04	27
TYPED OR PRINTED		SIGNATURE OF PRINCIPAL EXECUTIVE OFFICER OR AUTHORIZED AGENT	AREA CODE	NUMBER	YEAR	MO	DAY

COMMENTS AND EXPLANATION OF ANY VIOLATIONS *(Reference all attachments here)*

PERMITTEE NAME/ADDRESS (Include Facility Name/ Location if Different)

NAME KOPPERS INDUSTRIES INC

ADDRESS P O BOX 160
TIE PLANT MS 38960

FACILITY LOCATION KOPPERS INDUSTRIES INC

ATTN: MR. RONALD MURPHEY

NATIONAL POLLUTANT DISCHARGE ELIMINATION SYSTEM (NPDES)
DISCHARGE MONITORING REPORT (DMR)
(2-16)

MS0090300 — PERMIT NUMBER (17-19)

001 A — DISCHARGE NUMBER

TOTAL FACILITY DISCHARGE
(SUBR NO) 12345
F - FINAL
MINOR

Form Approved.
OMB No. 2040-0004
Approval expires 05-31-98

MONITORING PERIOD	YEAR	MO	DAY		YEAR	MO	DAY
FROM	97	02	01	TO	97	02	28
	(20-21)	(22-23)	(24-26)		(26-27)	(28-29)	(30-31)

*** NO DISCHARGE |__| ***

NOTE: Read instructions before completing this form.

PARAMETER (32-37)		(3 Card Only) (46-53) QUANTITY OR LOADING (54-61) AVERAGE	MAXIMUM	UNITS	(4 Card Only) (38-45) QUANTITY OR CONCENTRATION (46-53) MINIMUM	(54-61) AVERAGE	MAXIMUM	UNITS	NO. EX (62-63)	FREQUENCY OF ANALYSIS (64-68)	SAMPLE TYPE (69-70)
BOD, 5-DAY (20 DEG. C) 00310 1 0 0 EFFLUENT GROSS VALUE	SAMPLE MEASUREMENT	.5739	.9682	(26)	******	6.9	12.9	(19)		1/7	24hc
	PERMIT REQUIREMENT	70 MO AVG	140 DAILY MX	LBS/DY	******	240 MO AVG	480 DAILY MX	MG/L		WEEKLY	COMP24
00400 1 0 0 EFFLUENT GROSS VALUE	SAMPLE MEASUREMENT	******	******		7.62	******	8.4	(12)		2/7	Grab
	PERMIT REQUIREMENT	******	******	** ** * ***	5.5 MINIMUM	******	9.5 MAXIMUM	SU		TWICE/WEEK	GRAB
SOLIDS, TOTAL SUSPENDED 00530 1 0 0 EFFLUENT GROSS VALUE	SAMPLE MEASUREMENT	3.4067	4.787	(26)	******	41.75	58	(19)		1/7	24hc
	PERMIT REQUIREMENT	88 MO AVG	175 DAILY MX	LBS/DY	******	300 MO AVG	600 DAILY MX	MG/L		WEEKLY	COMP24
OIL & GREASE (FREON EXTR.-IR METH) TOT, HC 00560 1 0 0 EFFLUENT GROSS VALUE	SAMPLE MEASUREMENT	.07489	1.4936	(01) lbs/DAY	******	8.46	19.9	(19)		1/7	Grab
	PERMIT REQUIREMENT	REPORT MO AVG	29.2 DAILY MX		******	REPORT MO AVG	100 DAILY MX	MG/L		WEEKLY	GRAB
PENTACHLOROPHENOL 39032 1 0 0 EFFLUENT GROSS VALUE	SAMPLE MEASUREMENT	.012	.023	(01) lbs/DAY	******	.165	.475	(19)		1/7	Grab
	PERMIT REQUIREMENT	.053 MO AVG	.102 DAILY MX		******	.10 MO AVG	.36 DAILY MX	MG/L		WEEKLY	GRAB
PHENOLS 46000 1 0 0 EFFLUENT GROSS VALUE	SAMPLE MEASUREMENT	.0206	.0407	(01) lbs/DAY	******	.314	.814	(19)		1/7	Grab
	PERMIT REQUIREMENT	.08 MO AVG	1.75 DAILY MX		******	3 MO AVG	6 DAILY MX	MG/L		WEEKLY	GRAB
FLOW, IN CONDUIT OR THRU TREATMENT PLANT 50050 1 0 0 EFFLUENT GROSS VALUE	SAMPLE MEASUREMENT	.011	.022	(03)	******	******	******			Daily	Cont
	PERMIT REQUIREMENT	REPORT MO AVG	0.035 DAILY MX	MGD	******	******	******	**** ****		DAILY	CONTIN

NAME/TITLE PRINCIPAL EXECUTIVE OFFICER

Thomas L. Henderson

TYPED OR PRINTED

I CERTIFY UNDER PENALTY OF LAW THAT I HAVE PERSONALLY EXAMINED AND AM FAMILIAR WITH THE INFORMATION SUBMITTED HEREIN; AND BASED ON MY INQUIRY OF THOSE INDIVIDUALS IMMEDIATELY RESPONSIBLE FOR OBTAINING THE INFORMATION, I BELIEVE THE SUBMITTED INFORMATION IS TRUE, ACCURATE AND COMPLETE. I AM AWARE THAT THERE ARE SIGNIFICANT PENALTIES FOR SUBMITTING FALSE INFORMATION, INCLUDING THE POSSIBILITY OF FINE AND IMPRISONMENT. SEE 18 U.S.C. § 1001 AND 33 U.S.C. § 1319. *(Penalties under these statutes may include fines up to $10,000 and or maximum imprisonment of between 6 months and 5 years.)*

Thomas L. Henderson

SIGNATURE OF PRINCIPAL EXECUTIVE OFFICER OR AUTHORIZED AGENT

TELEPHONE		DATE		
601	226-4584	97	03	26
AREA CODE	NUMBER	YEAR	MO	DAY

COMMENTS AND EXPLANATION OF ANY VIOLATIONS *(Reference all attachments here)*

* See attached letter.

EPA Form 3320-1 (08-95) Previous editions may be used. (REPLACES EPA FORM T-40 WHICH MAY NOT BE USED.)

00584/970128-1111

NAME KOPPERS INDUSTRIES INC
ADDRESS P O BOX 160
TIE PLANT
GRENADA MS 38960

File

NATIONAL POLLUTANT DISCHARGE ELIMINATION SYSTEM (NPDES)
DISCHARGE MONITORING REPORT (DMR)

Form Approved.
OMB No. 2040-0004
Approval expires 05-31-98

MS0090300 (2-16) — PERMIT NUMBER
001 A (17-19) — DISCHARGE NUMBER

TOTAL FACILITY DISCHARGE
(SUBR NC)
F - FINAL
MINOR
12305

FACILITY LOCATION KOPPERS INDUSTRIES INC
ATTN: MR. RONALD MURPHEY

MONITORING PERIOD

	YEAR	MO	DAY		YEAR	MO	DAY
FROM	97	01	01	TO	97	01	31
	(20-21)	(22-23)	(24-25)		(26-27)	(28-29)	(30-31)

*** NO DISCHARGE | | ***

NOTE: Read instructions before completing this form.

PARAMETER (32-37)		QUANTITY OR LOADING (3 Card Only) (46-53) AVERAGE	(54-61) MAXIMUM	UNITS	QUANTITY OR CONCENTRATION (4 Card Only) (38-45) MINIMUM	(46-53) AVERAGE	(54-61) MAXIMUM	UNITS	NO. EX (62-63)	FREQUENCY OF ANALYSIS (64-68)	SAMPLE TYPE (69-70)
BOD, 5-DAY (20 DEG. C) 00310 1 0 0 EFFLUENT GROSS VALUE	SAMPLE MEASUREMENT	1.03	2.24	(26)	******	7.75	16.8	(19)		1/7	24hc
	PERMIT REQUIREMENT	70 MO AVG	140 DAILY MX	LBS/DY	******	200 MO AVG	400 DAILY MX	MG/L		WEEKLY	COMP24
PH 00400 1 0 0 EFFLUENT GROSS VALUE	SAMPLE MEASUREMENT	******	******		7.97	******	8.21	(12)		2/7	Grab
	PERMIT REQUIREMENT	******	******	** ** ***	5.5 MINIMUM	******	9.0 MAXIMUM	SU		TWICE PER WEEK	GRAB
SOLIDS, TOTAL SUSPENDED 00530 1 0 0 EFFLUENT GROSS VALUE	SAMPLE MEASUREMENT	11.18	22.91	(26)	******	65.25	125	(19)		1/7	24hc
	PERMIT REQUIREMENT	88 MO AVG	175 DAILY MX	LBS/DY	******	300 MO AVG	600 DAILY MX	MG/L		WEEKLY	COMP24
OIL & GREASE (FREON EXTR.-IR METH) TOT, RC 00560 1 0 0 EFFLUENT GROSS VALUE	SAMPLE MEASUREMENT	.3215	.6621	(01)	******	1.81	2.94	(19)		1/7	Grab
	PERMIT REQUIREMENT	REPORT MO AVG	29.2 DAILY MX	lbs/DAY	******	REPORT MO AVG	100 DAILY MX	MG/L		WEEKLY	GRAB
PENTACHLOROPHENOL 39032 1 0 0 EFFLUENT GROSS VALUE	SAMPLE MEASUREMENT	.0013	.0036	(01)	******	.012	.04	(19)		1/7	Grab
	PERMIT REQUIREMENT	.053 MO AVG	.102 DAILY MX	lbs/DAY	******	.18 MO AVG	.36 DAILY MX	UG/L		WEEKLY	GRAB
PHENOLS 34000 1 0 0 EFFLUENT GROSS VALUE	SAMPLE MEASUREMENT	.0085	.0135	(01)	******	.049	.072	(19)		1/7	Grab
	PERMIT REQUIREMENT	.30 MO AVG	1.75 DAILY MX	lbs/DAY	******	3 MO AVG	6 DAILY MX	MG/L		WEEKLY	GRAB
FLOW, IN CONDUIT OR THRU TREATMENT PLANT 50050 1 0 0 EFFLUENT GROSS VALUE	SAMPLE MEASUREMENT	.017	.027	(03)	******	******	******			Daily	Cont
	PERMIT REQUIREMENT	REPORT MO AVG	0.035 DAILY MX	MGD	******	******	******	**** ****		DAILY	CONTIN

NAME/TITLE PRINCIPAL EXECUTIVE OFFICER: Thomas L. Henderson
TYPED OR PRINTED

I CERTIFY UNDER PENALTY OF LAW THAT I HAVE PERSONALLY EXAMINED AND AM FAMILIAR WITH THE INFORMATION SUBMITTED HEREIN; AND BASED ON MY INQUIRY OF THOSE INDIVIDUALS IMMEDIATELY RESPONSIBLE FOR OBTAINING THE INFORMATION, I BELIEVE THE SUBMITTED INFORMATION IS TRUE, ACCURATE AND COMPLETE. I AM AWARE THAT THERE ARE SIGNIFICANT PENALTIES FOR SUBMITTING FALSE INFORMATION, INCLUDING THE POSSIBILITY OF FINE AND IMPRISONMENT. SEE 18 U.S.C. § 1001 AND 33 U.S.C. § 1319. *(Penalties under these statutes may include fines up to $10,000 and or maximum imprisonment of between 6 months and 5 years.)*

Thomas L. Henderson
SIGNATURE OF PRINCIPAL EXECUTIVE OFFICER OR AUTHORIZED AGENT

TELEPHONE		DATE		
AREA CODE	NUMBER	YEAR	MO	DAY
601	226-4584	97	02	23

COMMENTS AND EXPLANATION OF ANY VIOLATIONS *(Reference all attachments here)*

EPA Form 3320-1 (08-95) Previous editions may be used. (REPLACES EPA FORM T-40 WHICH MAY NOT BE USED.)

00583/970128-1111

PAGE OF

NAME KOPPERS INDUSTRIES INC

ADDRESS P O BOX 160

TIE PLANT MS 38560

FILE G REPORT

NATIONAL POLLUTANT DISCHARGE ELIMINATION SYSTEM (NPDES)

DISCHARGE MONITORING REPORT (DMR)

Form Approved. OMB No. 2040-0004 Approval expires 05-31-98

PERMIT NUMBER (2-16)	DISCHARGE NUMBER (17-19)
MSP090500	001 A

TOTAL FACILITY DISCHARGE
SUBR NO
F - FINAL
MINOR

CAP

FACILITY

LOCATION

ATTN MR. RONALD MURPHEY

MONITORING PERIOD	YEAR	MO	DAY
FROM	96	12	01
TO	96	12	31
	(20-21)	(22-23)	(24-25)
	(26-27)	(28-29)	(30-31)

*** NO DISCHARGE ***

NOTE: Read Instructions before completing this form.

PARAMETER (32-37)		QUANTITY OR LOADING (3 Card Only) (46-53) AVERAGE	(54-61) MAXIMUM	UNITS	QUANTITY OR CONCENTRATION (4 Card Only) (38-45) MINIMUM	(46-53) AVERAGE	(54-61) MAXIMUM	UNITS	NO. EX (62-63)	FREQUENCY OF ANALYSIS (64-68)	SAMPLE TYPE (69-70)
BOD, 5-DAY 20 DEG. C 00310 1 0 0 EFFLUENT GROSS VALUE	SAMPLE MEASUREMENT	.283	.825	25	******	4.92	8.40	19		1/7	24hc
	PERMIT REQUIREMENT	70 MO AVG	140 DAILY MX	LBS/DY	******	240 MO AVG	480 DAILY MX	MG/L		WEEKLY	COMP24
PH 00400 1 0 0 EFFLUENT GROSS VALUE	SAMPLE MEASUREMENT	******	******		7.08	******	8.28	12		2/7	Grab
	PERMIT REQUIREMENT	******	******	**** ****	6.5 MINIMUM	******	9.5 MAXIMUM	SU		TWICE/WEEK	GRAB
SOLIDS, TOTAL SUSPENDED 00530 1 0 0 EFFLUENT GROSS VALUE	SAMPLE MEASUREMENT	2.951	4.503	26	******	59	135	19		1/7	24hc
	PERMIT REQUIREMENT	35 MO AVG	175 DAILY MX	LBS/DY	******	300 MO AVG	600 DAILY MX	MG/L		WEEKLY	COMP24
OIL & GREASE FREON EXTR.-IR METH TOT.RC 00560 1 0 0 EFFLUENT GROSS VALUE	SAMPLE MEASUREMENT	.1007	.222	01	******	1.624	2.333	19		1/7	Grab
	PERMIT REQUIREMENT	REPORT MO AVG	29.2 DAILY MX	KG/ DAY	******	REPORT MO AVG	100 DAILY MX	MG/L		WEEKLY	GRAB
PENTACHLOROPHENOL 39032 1 0 0 EFFLUENT GROSS VALUE	SAMPLE MEASUREMENT	0	0	01	******	0	0	19		1/7	Grab
	PERMIT REQUIREMENT	.053 MO AVG	.102 DAILY MX	KG/ DAY	******	.13 MO AVG	.16 DAILY MX	MG/L		WEEKLY	GRAB
PHENOLS 00 1 0 0 EFFLUENT GROSS VALUE	SAMPLE MEASUREMENT	0	0	01	******	0	0	19		1/7	Grab
	PERMIT REQUIREMENT	.38 MO AVG	1.75 DAILY MX	KG/ DAY	******	3 MO AVG	6 DAILY MX	MG/L		WEEKLY	GRAB
FLOW, IN CONDUIT OR THRU TREATMENT PLANT 50050 1 0 0 EFFLUENT GROSS VALUE	SAMPLE MEASUREMENT	.010	.028	03	******	******	******			Daily	Cont
	PERMIT REQUIREMENT	REPORT MO AVG	.031 DAILY MX	MGD	******	******	******	**** ****		DAILY	CONTIN

NAME/TITLE PRINCIPAL EXECUTIVE OFFICER

Thomas L. Henderson

TYPED OR PRINTED

I CERTIFY UNDER PENALTY OF LAW THAT I HAVE PERSONALLY EXAMINED AND AM FAMILIAR WITH THE INFORMATION SUBMITTED HEREIN; AND BASED ON MY INQUIRY OF THOSE INDIVIDUALS IMMEDIATELY RESPONSIBLE FOR OBTAINING THE INFORMATION, I BELIEVE THE SUBMITTED INFORMATION IS TRUE, ACCURATE AND COMPLETE. I AM AWARE THAT THERE ARE SIGNIFICANT PENALTIES FOR SUBMITTING FALSE INFORMATION, INCLUDING THE POSSIBILITY OF FINE AND IMPRISONMENT. SEE 18 U.S.C. § 1001 AND 33 U.S.C. § 1319. *(Penalties under these statutes may include fines up to $10,000 and or maximum imprisonment of between 6 months and 5 years.)*

Thomas L. Henderson

SIGNATURE OF PRINCIPAL EXECUTIVE OFFICER OR AUTHORIZED AGENT

TELEPHONE AREA CODE	NUMBER	DATE YEAR	MO	DAY
601	226-4584	97	01	22

COMMENTS AND EXPLANATION OF ANY VIOLATIONS *(Reference all attachments here)*

NATIONAL POLLUTANT DISCHARGE ELIMINATION SYSTEM

DISCHARGE MONITORING REPORT (DMR)

TOTAL FACILITY DISCHARGE
SUBR NO 1234
F - FINAL
MINOR

Approval expires 05-31-98

PERMITTEE NAME/ADDRESS (Include Facility Name/ Location if Different)
NAME KOPPERS INDUSTRIES INC
ADDRESS P O BOX 160 MS 38960
TTIE PLANT

FACILITY
LOCATION
ATTN MR. RONALD MURPHEY

(2-16) MS0090300 — PERMIT NUMBER

(17-19) 001 Y — DISCHARGE NUMBER

MONITORING PERIOD

	YEAR	MO	DAY		YEAR	MO	DAY
FROM	96	07	01	TO	96	12	31
	(20-21)	(22-23)	(24-25)		(26-27)	(28-29)	(30-31)

*** NO DISCHARGE ***

NOTE: Read instructions before completing this form.

PARAMETER (32-37)		QUANTITY OR LOADING (3 Card Only) (46-53) AVERAGE	(54-61) MAXIMUM	UNITS	QUANTITY OR CONCENTRATION (4 Card Only) (38-45) MINIMUM	(46-53) AVERAGE	(54-61) MAXIMUM	UNITS	NO. EX (62-63)	FREQUENCY OF ANALYSIS (64-68)	SAMPLE TYPE (69-70)
ARSENIC, TOTAL RECOV ERABLE 00978 1 0 0 EFFLUENT GROSS VALUE	SAMPLE MEASUREMENT	0	0	26	******	0	0	19		Semi-An	24hc
	PERMIT REQUIREMENT	REPORT ANNL AVG	.131 ANNL MAX	LBS/DY	******	REPORT ANNL AVG	.45 ANNL MAX	MG/L		SEMI- ANNUAL	COMP24
CHROMIUM TOTAL RECOVERABLE 01034 1 0 0 EFFLUENT GROSS VALUE	SAMPLE MEASUREMENT	0	0	26	******	0	0	19		Semi-An	24hc
	PERMIT REQUIREMENT	REPORT ANNL AVG	.168 ANNL MAX	LBS/DY	******	REPORT ANNL AVG	4.0 ANNL MAX	MG/L		SEMI- ANNUAL	COMP24
COPPER TOTAL RECOVERABLE 01119 1 0 0 EFFLUENT GROSS VALUE	SAMPLE MEASUREMENT	.00337	.00337	26	******	.027	.027	19		Semi-An	24hc
	PERMIT REQUIREMENT	REPORT ANNL AVG	.642 ANNL MAX	LBS/DY	******	REPORT ANNL AVG	2.2 ANNL MAX	MG/L		SEMI- ANNUAL	COMP24
	SAMPLE MEASUREMENT										
	PERMIT REQUIREMENT										
	SAMPLE MEASUREMENT										
	PERMIT REQUIREMENT										
	SAMPLE MEASUREMENT										
	PERMIT REQUIREMENT										
	SAMPLE MEASUREMENT										
	PERMIT REQUIREMENT										

TITLE PRINCIPAL EXECUTIVE OFFICER

Mary L Henderson
TYPED OR PRINTED

I CERTIFY UNDER PENALTY OF LAW THAT I HAVE PERSONALLY EXAMINED AND AM FAMILIAR WITH THE INFORMATION SUBMITTED HEREIN; AND BASED ON MY INQUIRY OF THOSE INDIVIDUALS IMMEDIATELY RESPONSIBLE FOR OBTAINING THE INFORMATION, I BELIEVE THE SUBMITTED INFORMATION IS TRUE, ACCURATE AND COMPLETE. I AM AWARE THAT THERE ARE SIGNIFICANT PENALTIES FOR SUBMITTING FALSE INFORMATION, INCLUDING THE POSSIBILITY OF FINE AND IMPRISONMENT. SEE 18 U.S.C. § 1001 AND 33 U.S.C. § 1319. *(Penalties under these statutes may include fines up to $10,000 and or maximum imprisonment of between 6 months and 5 years.)*

Thomas L. Henderson
SIGNATURE OF PRINCIPAL EXECUTIVE OFFICER OR AUTHORIZED AGENT

TELEPHONE		DATE	
601	226-4584	97	01
AREA CODE	NUMBER	YEAR	MO

MENTS AND EXPLANATION OF ANY VIOLATIONS *(Reference all attachments here)*

(REPLACES EPA FORM T-40 WHICH MAY NOT BE USED.) 00236/960206-1534

Previous editions may be used.

PERMITTEE NAME/ADDRESS *(Include Facility Name/ Location if Different)*

NAME KOPPERS INDUSTRIES INC

ADDRESS P O BOX 160

TIE PLANT MS 38660

FILE GRENADA

NATIONAL POLLUTANT DISCHARGE ELIMINATION SYSTEM *(NPDES)*

DISCHARGE MONITORING REPORT *(DMR)*

Form Approved. OMB No. 2040-0004 Approval expires 05-31-98

PERMIT NUMBER (2-16)	DISCHARGE NUMBER (17-19)
MSP030100	001 A

TOTAL FACILITY DISCHARGE
SUBR NO 12345
F - FINAL
MINOR

LAP

FACILITY LOCATION

ATTN MR. RONALD MURPHEY

MONITORING PERIOD	YEAR	MO	DAY		YEAR	MO	DAY
FROM	96	11	01	TO	96	11	30
	(20-21)	(22-23)	(24-25)		(26-27)	(28-29)	(30-31)

*** NO DISCHARGE ***

NOTE: Read instructions before completing this form.

PARAMETER (32-37)		QUANTITY OR LOADING (3 Card Only) AVERAGE (46-53)	MAXIMUM (54-61)	UNITS	QUANTITY OR CONCENTRATION (4 Card Only) MINIMUM (38-45)	AVERAGE (46-53)	MAXIMUM (54-61)	UNITS	NO. EX (62-63)	FREQUENCY OF ANALYSIS (64-68)	SAMPLE TYPE (69-70)
BOD, 5-DAY 20 DEG. C 00310 1 0 0 EFFLUENT GROSS VALUE	SAMPLE MEASUREMENT	.229	.390	26	******	1.725	3.6	19		1/7	24HC
	PERMIT REQUIREMENT	70 MO AVG	140 DAILY MX	LBS/DY	******	240 MO AVG	480 DAILY MX	MG/L		WEEKLY	COMP24
PH 00400 1 0 0 EFFLUENT GROSS VALUE	SAMPLE MEASUREMENT	******	******		7.67	******	8.40	12		2/7	Grab
	PERMIT REQUIREMENT	******	******	**** ****	6.5 MINIMUM	******	9.5 MAXIMUM	SU		TWICE/ WEEK	GRAB
SOLIDS, TOTAL SUSPENDED 00530 1 0 0 EFFLUENT GROSS VALUE	SAMPLE MEASUREMENT	9.273	14.444	26	******	72.5	105	19		1/7	24HC
	PERMIT REQUIREMENT	38 MO AVG	75 DAILY MX	LBS/DY	******	300 MO AVG	600 DAILY MX	MG/L		WEEKLY	COMP24
OIL & GREASE FREON EXTR.-IR METH TOT,RC 00560 1 0 0 EFFLUENT GROSS VALUE	SAMPLE MEASUREMENT	.099	.238	01	******	.575	1.3	19		1/7	Grab
	PERMIT REQUIREMENT	REPORT MO AVG	29.2 DAILY MX	16 / DAY	******	REPORT MO AVG	100 DAILY MX	MG/L		WEEKLY	GRAB
PENTACHLOROPHENOL 39032 1 0 0 EFFLUENT GROSS VALUE	SAMPLE MEASUREMENT	0	0	01	******	0	0	19		1/7	Grab
	PERMIT REQUIREMENT	.053 MO AVG	.102 DAILY MX	16 / DAY	******	.13 MO AVG	.36 DAILY MX	MG/L		WEEKLY	GRAB
CYANIDE 46000 1 0 0 EFFLUENT GROSS VALUE	SAMPLE MEASUREMENT	0	0	01	******	0	0	19		1/7	Grab
	PERMIT REQUIREMENT	.38 MO AVG	1.75 DAILY MX	16 / DAY	******	5 MO AVG	6 DAILY MX	MG/L		WEEKLY	GRAB
FLOW, IN CONDUIT OR THRU TREATMENT PLANT 50050 1 0 0 EFFLUENT GROSS VALUE	SAMPLE MEASUREMENT	.013	.024	03	******	******	******			0 only	Cont.
	PERMIT REQUIREMENT	REPORT MO AVG	REPORT DAILY MX	MGD	******	******	******	*** ****		DAILY	CONTIN

NAME/TITLE PRINCIPAL EXECUTIVE OFFICER		TELEPHONE		DATE		
Thomas L. Henderson	I CERTIFY UNDER PENALTY OF LAW THAT I HAVE PERSONALLY EXAMINED AND AM FAMILIAR WITH THE INFORMATION SUBMITTED HEREIN; AND BASED ON MY INQUIRY OF THOSE INDIVIDUALS IMMEDIATELY RESPONSIBLE FOR OBTAINING THE INFORMATION, I BELIEVE THE SUBMITTED INFORMATION IS TRUE, ACCURATE AND COMPLETE. I AM AWARE THAT THERE ARE SIGNIFICANT PENALTIES FOR SUBMITTING FALSE INFORMATION, INCLUDING THE POSSIBILITY OF FINE AND IMPRISONMENT. SEE 18 U.S.C. § 1001 AND 33 U.S.C. § 1319. *(Penalties under these statutes may include fines up to $10,000 and or maximum imprisonment of between 6 months and 5 years.)*	Thomas L. Henderson	601	276-4584	96	12	20
TYPED OR PRINTED		SIGNATURE OF PRINCIPAL EXECUTIVE OFFICER OR AUTHORIZED AGENT	AREA CODE	NUMBER	YEAR	MO	DAY

COMMENTS AND EXPLANATION OF ANY VIOLATIONS *(Reference all attachments here)*

PERMITTEE NAME/ADDRESS (Include Facility Name/ Location if Different)

NAME KOPPERS INDUSTRIES INC

ADDRESS P O BOX 160
TIE PLANT MS 38560

FILE GRENADA

FACILITY

LOCATION

ATTN MR. RONALD MURPHEY

NATIONAL POLLUTANT DISCHARGE ELIMINATION SYSTEM (NPDES)
DISCHARGE MONITORING REPORT (DMR)

Form Approved. OMB No. 2040-0004 Approval expires 05-31-98

PERMIT NUMBER (2-16)	DISCHARGE NUMBER (17-19)
MSP000300	001 A

TOTAL FACILITY DISCHARGE
SUBR NO (2345)
F - FINAL
MINOR

LAP

MONITORING PERIOD	YEAR	MO	DAY		YEAR	MO	DAY
FROM	96	10	01	TO	96	10	31
	(20-21)	(22-23)	(24-25)		(26-27)	(28-29)	(30-31)

*** NO DISCHARGE ***

NOTE: Read instructions before completing this form.

PARAMETER (32-37)		(3 Card Only) (46-53) QUANTITY OR LOADING (54-61) AVERAGE	MAXIMUM	UNITS	(4 Card Only) (38-45) QUANTITY OR CONCENTRATION (46-53) MINIMUM	AVERAGE	(54-61) MAXIMUM	UNITS	NO. EX (62-63)	FREQUENCY OF ANALYSIS (64-68)	SAMPLE TYPE (69-70)
BOD, 5-DAY 20 DEG. C 00310 1 0 0 EFFLUENT GROSS VALUE	SAMPLE MEASUREMENT	.090	.3502	26	******	.9	3	19		1/7	24HC
	PERMIT REQUIREMENT	70 MO AVG	140 DAILY MX	LBS/DY	******	240 MO AVG	440 DAILY MX	MG/L		WEEKLY	COMP24
00400 1 0 0 EFFLUENT GROSS VALUE	SAMPLE MEASUREMENT	******	******		7.7	******	8.4	12		2/7	Grab
	PERMIT REQUIREMENT	******	******	**** ****	6.5 MINIMUM	******	9.5 MAXIMUM	SU		TWICE/WEEK	GRAB
SOLIDS, TOTAL SUSPENDED 00530 1 0 0 EFFLUENT GROSS VALUE	SAMPLE MEASUREMENT	1.541	3.853	26	******	18.4	33	19		1/7	24HC
	PERMIT REQUIREMENT	53 MO AVG	175 DAILY MX	LBS/DY	******	300 MO AVG	600 DAILY MX	MG/L		WEEKLY	COMP24
OIL & GREASE FREON EXTR.-IR METH TOT,RC 00560 1 0 0 EFFLUENT GROSS VALUE	SAMPLE MEASUREMENT	.06876	.140	01	******	.9004	2.1	19		1/7	Grab
	PERMIT REQUIREMENT	REPORT MO AVG	29.2 DAILY MX	KG/DAY	******	REPORT MO AVG	100 DAILY MX	MG/L		WEEKLY	GRAB
PENTACHLOROPHENOL 39032 1 0 0 EFFLUENT GROSS VALUE	SAMPLE MEASUREMENT	.0016	.006	01	******	.00018	.0008	19		1/7	Grab
	PERMIT REQUIREMENT	.053 MO AVG	.102 DAILY MX	KG/DAY	******	.18 MO AVG	.36 DAILY MX	MG/L		WEEKLY	GRAB
PHENOLS 34000 1 0 0 EFFLUENT GROSS VALUE	SAMPLE MEASUREMENT	.0026	.00074	01	******	.1008	.102	19		1/7	Grab
	PERMIT REQUIREMENT	.08 MO AVG	.16 DAILY MX	KG/DAY	******	3 MO AVG	6 DAILY MX	MG/L		WEEKLY	GRAB
FLOW, IN CONDUIT OR THRU TREATMENT PLANT 50050 1 0 0 EFFLUENT GROSS VALUE	SAMPLE MEASUREMENT	.010	.021	03	******	******	******			Daily	Cont
	PERMIT REQUIREMENT	REPORT MO AVG	REPORT DAILY MX	MGD	******	******	******	**** ****		DAILY	CONTIN

NAME/TITLE PRINCIPAL EXECUTIVE OFFICER		TELEPHONE		DATE		
Thomas L. Henderson	601	226-4584		96	11	21
TYPED OR PRINTED	AREA CODE	NUMBER		YEAR	MO	DAY

I CERTIFY UNDER PENALTY OF LAW THAT I HAVE PERSONALLY EXAMINED AND AM FAMILIAR WITH THE INFORMATION SUBMITTED HEREIN; AND BASED ON MY INQUIRY OF THOSE INDIVIDUALS IMMEDIATELY RESPONSIBLE FOR OBTAINING THE INFORMATION, I BELIEVE THE SUBMITTED INFORMATION IS TRUE, ACCURATE AND COMPLETE. I AM AWARE THAT THERE ARE SIGNIFICANT PENALTIES FOR SUBMITTING FALSE INFORMATION, INCLUDING THE POSSIBILITY OF FINE AND IMPRISONMENT. SEE 18 U.S.C. § 1001 AND 33 U.S.C. § 1319. *(Penalties under these statutes may include fines up to $10,000 and or maximum imprisonment of between 6 months and 5 years.)*

11/21/96
Thomas L. Henderson
SIGNATURE OF PRINCIPAL EXECUTIVE OFFICER OR AUTHORIZED AGENT

COMMENTS AND EXPLANATION OF ANY VIOLATIONS *(Reference all attachments here)*

PERMITTEE NAME/ADDRESS (Include Facility Name/Location if Different)
NAME KOPPERS INDUSTRIES INC
ADDRESS P O BOX 160
TIE PLANT MS 38960

FILE GREEN

NATIONAL POLLUTANT DISCHARGE ELIMINATION SYSTEM (NPDES)
DISCHARGE MONITORING REPORT (DMR)

Form Approved.
OMB No. 2040-0004
Approval expires 05-31-98

(2-16)	(17-19)
MSP099300	001 A
PERMIT NUMBER	DISCHARGE NUMBER

TOTAL FACILITY DISCHARGE
SUBR NO 12345
F - FINAL
MINOR

FACILITY
LOCATION
ATTN MR. RONALD MURPHEY

MONITORING PERIOD	YEAR	MO	DAY		YEAR	MO	DAY
FROM	96	09	01	TO	96	09	30
	(20-21)	(22-23)	(24-25)		(26-27)	(28-29)	(30-31)

*** NO DISCHARGE ***

NOTE: Read instructions before completing this form.

PARAMETER (32-37)		(3 Card Only) (46-53) QUANTITY OR LOADING (54-61) AVERAGE	MAXIMUM	UNITS	(4 Card Only) (38-45) QUANTITY OR CONCENTRATION (46-53) MINIMUM	(54-61) AVERAGE	MAXIMUM	UNITS	NO. EX (62-63)	FREQUENCY OF ANALYSIS (64-68)	SAMPLE TYPE (69-70)
BOD, 5-DAY 20 DEG. C 00310 1 0 0 EFFLUENT GROSS VALUE	SAMPLE MEASUREMENT	.2685	.420	26	******	1.66	2.1	19		1/7	24hc
	PERMIT REQUIREMENT	70 MO AVG	140 DAILY MX	LBS/DY	******	240 MO AVG	480 DAILY MX	MG/L		WEEKLY	COMP24
PH 00400 1 0 0 EFFLUENT GROSS VALUE	SAMPLE MEASUREMENT	******	******		7.70	******	8.25	12		2/7	Grab
	PERMIT REQUIREMENT	******	******	**** ****	5.5 MINIMUM	******	9.5 MAXIMUM	SU		TWICE/WEEK	GRAB
SOLIDS, TOTAL SUSPENDED 00530 1 0 0 EFFLUENT GROSS VALUE	SAMPLE MEASUREMENT	5.281	10.208	26	******	28.75	51	19		1/7	Grab
	PERMIT REQUIREMENT	38 MO AVG	75 DAILY MX	LBS/DY	******	300 MO AVG	600 DAILY MX	MG/L		WEEKLY	COMP24
OIL & GREASE FREON EXTR.-IR METH TOT,RC 00560 1 0 0 EFFLUENT GROSS VALUE	SAMPLE MEASUREMENT	.1584	.1834	01	******	0.5	1.0	19		1/7	Grab
	PERMIT REQUIREMENT	REPORT MO AVG	89.2 DAILY MX	~~LBS/DY~~ DAY	******	REPORT MO AVG	100 DAILY MX	MG/L		WEEKLY	GRAB
PENTACHLOROPHENOL 39032 1 0 0 EFFLUENT GROSS VALUE	SAMPLE MEASUREMENT	.00008	.000325	01	******	.00075	.003	19		1/7	Grab
	PERMIT REQUIREMENT	.053 MO AVG	.102 DAILY MX	~~LBS/DY~~ DAY	******	.13 MO AVG	.36 DAILY MX	MG/L		WEEKLY	GRAB
PHENOLS 32730 1 0 0 EFFLUENT GROSS VALUE	SAMPLE MEASUREMENT	.00054	.00216	01	******	.005	.02	19		1/7	Grab
	PERMIT REQUIREMENT	.38 MO AVG	1.75 DAILY MX	~~LBS/DY~~ DAY	******	3 MO AVG	6 DAILY MX	MG/L		WEEKLY	GRAB
FLOW, IN CONDUIT OR THRU TREATMENT PLANT 50050 1 0 0 EFFLUENT GROSS VALUE	SAMPLE MEASUREMENT	.016	.029	03	******	******	******			Daily	Cont.
	PERMIT REQUIREMENT	REPORT MO AVG	0.035 DAILY MX	MGD	******	******	******	*** ****		DAILY	CONTIN

NAME/TITLE PRINCIPAL EXECUTIVE OFFICER		TELEPHONE		DATE		
Thomas L. Henderson Plant Manager	I CERTIFY UNDER PENALTY OF LAW THAT I HAVE PERSONALLY EXAMINED AND AM FAMILIAR WITH THE INFORMATION SUBMITTED HEREIN; AND BASED ON MY INQUIRY OF THOSE INDIVIDUALS IMMEDIATELY RESPONSIBLE FOR OBTAINING THE INFORMATION, I BELIEVE THE SUBMITTED INFORMATION IS TRUE, ACCURATE AND COMPLETE. I AM AWARE THAT THERE ARE SIGNIFICANT PENALTIES FOR SUBMITTING FALSE INFORMATION, INCLUDING THE POSSIBILITY OF FINE AND IMPRISONMENT. SEE 18 U.S.C. § 1001 AND 33 U.S.C. § 1319. *(Penalties under these statutes may include fines up to $10,000 and or maximum imprisonment of between 6 months and 5 years.)*	Thomas L. Henderson Plant Manager	601	226-4584	96	10	24
TYPED OR PRINTED		SIGNATURE OF PRINCIPAL EXECUTIVE OFFICER OR AUTHORIZED AGENT	AREA CODE	NUMBER	YEAR	MO	DAY

COMMENTS AND EXPLANATION OF ANY VIOLATIONS *(Reference all attachments here)*

NAME KOPPERS INDUSTRIES INC
ADDRESS P O BOX 160
TIE PLANT MS 38960

FACILITY
LOCATION
ATTN MR. RONALD MURPHEY

NATIONAL POLLUTANT DISCHARGE ELIMINATION SYSTEM (NPDES)
DISCHARGE MONITORING REPORT (DMR)

PERMIT NUMBER (2-16)	DISCHARGE NUMBER (17-19)
MSP099300	001 A

TOTAL FACILITY DISCHARGE
SUBR NO 12345
F - FINAL
MINOR

LAP

Form Approved.
OMB No. 2040-0004
Approval expires 05-31-98

MONITORING PERIOD	YEAR	MO	DAY
FROM	95	08	01
TO	95	08	31

*** NO DISCHARGE ***

NOTE: Read instructions before completing this form.

PARAMETER (32-37)		(3 Card Only) (46-53) QUANTITY OR LOADING (54-61) AVERAGE	MAXIMUM	UNITS	(4 Card Only) (38-45) QUANTITY OR CONCENTRATION (46-53) MINIMUM	(54-61) AVERAGE	MAXIMUM	UNITS	NO. EX (62-63)	FREQUENCY OF ANALYSIS (64-68)	SAMPLE TYPE (69-70)
BOD, 5-DAY 20 DEG. C 00310 1 0 0 EFFLUENT GROSS VALUE	SAMPLE MEASUREMENT	.3990	.7005	26	******	3.037	6.0	19		1/7	24hc
	PERMIT REQUIREMENT	70 MO AVG	140 DAILY MX	LBS/DY	******	240 MO AVG	480 DAILY MX	MG/L		WEEKLY	COMP24
PH 00400 1 0 0 EFFLUENT GROSS VALUE	SAMPLE MEASUREMENT	******	******		8.15	******	8.6	12		2/7	Grab
	PERMIT REQUIREMENT	******	******	****	6.0 MINIMUM	******	9.0 MAXIMUM	SU		TWICE/WEEK	GRAB
SOLIDS, TOTAL SUSPENDED 00530 1 0 0 EFFLUENT GROSS VALUE	SAMPLE MEASUREMENT	6.771	12.61	26	******	45.25	72	19		1/7	24hc
	PERMIT REQUIREMENT	35 MO AVG	175 DAILY MX	LBS/DY	******	300 MO AVG	600 DAILY MX	MG/L		WEEKLY	COMP24
OIL & GREASE FREON EXTR.-IR METH TOT,RC 00560 1 0 0 EFFLUENT GROSS VALUE	SAMPLE MEASUREMENT	.0923	.2731	01	******	.6733	1.310	19		1/7	Grab
	PERMIT REQUIREMENT	REPORT MO AVG	29.2 DAILY MX	lbs/DAY	******	REPORT MO AVG	100 DAILY MX	MG/L		WEEKLY	GRAB
PENTACHLOROPHENOL 39032 1 0 0 EFFLUENT GROSS VALUE	SAMPLE MEASUREMENT	.00045 ~~.0923~~	.0010 ~~.2731~~	01	******	.0025	.006	19		1/7	Grab
	PERMIT REQUIREMENT	.053 MO AVG	.102 DAILY MX	lbs/DAY	******	.18 MO AVG	.36 DAILY MX	MG/L		WEEKLY	GRAB
PHENOLS 32730 1 0 0 EFFLUENT GROSS VALUE	SAMPLE MEASUREMENT	.0014	.0041	01	******	.0025	.0041	19		1/7	Grab
	PERMIT REQUIREMENT	.088 MO AVG	.175 DAILY MX	lbs/DAY	******	3 MO AVG	6 DAILY MX	MG/L		WEEKLY	GRAB
FLOW, IN CONDUIT OR THRU TREATMENT PLANT 50050 1 0 0 EFFLUENT GROSS VALUE	SAMPLE MEASUREMENT	.010	.026	03	******	******	******			Daily	Cont.
	PERMIT REQUIREMENT	REPORT MO AVG	.036 DAILY MX	MGD	******	******	******	**** ****		DAILY	CONTIN

NAME/TITLE PRINCIPAL EXECUTIVE OFFICER

Thomas L. Henderson / Plant Manager

TYPED OR PRINTED

I CERTIFY UNDER PENALTY OF LAW THAT I HAVE PERSONALLY EXAMINED AND AM FAMILIAR WITH THE INFORMATION SUBMITTED HEREIN; AND BASED ON MY INQUIRY OF THOSE INDIVIDUALS IMMEDIATELY RESPONSIBLE FOR OBTAINING THE INFORMATION, I BELIEVE THE SUBMITTED INFORMATION IS TRUE, ACCURATE AND COMPLETE. I AM AWARE THAT THERE ARE SIGNIFICANT PENALTIES FOR SUBMITTING FALSE INFORMATION, INCLUDING THE POSSIBILITY OF FINE AND IMPRISONMENT. SEE 18 U.S.C. § 1001 AND 33 U.S.C. § 1319. *(Penalties under these statutes may include fines up to $10,000 and or maximum imprisonment of between 6 months and 5 years.)*

Thomas L. Henderson / Plant Manager

SIGNATURE OF PRINCIPAL EXECUTIVE OFFICER OR AUTHORIZED AGENT

TELEPHONE AREA CODE	NUMBER	DATE YEAR	MO	DAY
601	226-4584	96	09	17

COMMENTS AND EXPLANATION OF ANY VIOLATIONS *(Reference all attachments here)*

NAME KUPPERS INDUSTRIES INC
ADDRESS P O BOX 160
TIE PLANT MS 38940

FILE GRENADA

NATIONAL POLLUTANT DISCHARGE ELIMINATION SYSTEM *(NPDES)*
DISCHARGE MONITORING REPORT *(DMR)*
(2-16) *(17-19)*

MS0090300 — PERMIT NUMBER
001 A — DISCHARGE NUMBER

Form Approved.
OMB No. 2040-0004
Approval expires 05-31-98

TOTAL FACILITY DISCHARGE
SUBR NO 12545
F - FINAL
MINOR

LAP

FACILITY
LOCATION
ATTN MR. RONALD MURPHEY

MONITORING PERIOD	YEAR	MO	DAY		YEAR	MO	DAY
FROM	96	07	01	TO	96	07	31
	(20-21)	(22-23)	(24-25)		(26-27)	(28-29)	(30-31)

*** NO DISCHARGE ***

NOTE: Read instructions before completing this form.

PARAMETER (32-37)		QUANTITY OR LOADING (3 Card Only) (46-53) AVERAGE	(54-61) MAXIMUM	UNITS	QUANTITY OR CONCENTRATION (4 Card Only) (38-45) MINIMUM	(46-53) AVERAGE	(54-61) MAXIMUM	UNITS	NO. EX (62-63)	FREQUENCY OF ANALYSIS (64-68)	SAMPLE TYPE (69-70)
BOD, 5-DAY 20 DEG. C 00310 1 0 0 EFFLUENT GROSS VALUE	SAMPLE MEASUREMENT	.232	.480	25	******	2.74	3.6	19		1/7	24hc
	PERMIT REQUIREMENT	70 MO AVG	140 DAILY MX	LBS/DY	******	240 MO AVG	420 DAILY MX	MG/L		WEEKLY	COMP24
PH 00400 1 0 0 EFFLUENT GROSS VALUE	SAMPLE MEASUREMENT	******	******		7.95	******	8.50	12		2/7	Grab
	PERMIT REQUIREMENT	******	******	**** ****	6.0 MINIMUM	******	9.0 MAXIMUM	SU		TWICE/WEEK	GRAB
SOLIDS, TOTAL SUSPENDED 00530 1 0 0 EFFLUENT GROSS VALUE	SAMPLE MEASUREMENT	3.47	6.27	26	******	39.2	51	19		1/7	Grab
	PERMIT REQUIREMENT	28 MO AVG	17 DAILY MX	LBS/DY	******	300 MO AVG	600 DAILY MX	MG/L		WEEKLY	COMP24
OIL & GREASE FREON EXTN.-IR METH TOT.RC 00560 1 0 0 EFFLUENT GROSS VALUE	SAMPLE MEASUREMENT	.0483	~~.5~~ .104	01	******	~~.~~ .0482	.904	19		1/7	Grab
	PERMIT REQUIREMENT	REPORT MO AVG	29.2 DAILY MX	lbs/DAY	******	REPORT MO AVG	100 DAILY MX	MG/L		WEEKLY	GRAB
PENTACHLOROPHENOL 39032 1 0 0 EFFLUENT GROSS VALUE	SAMPLE MEASUREMENT	.0128	.0623	01	******	.0184	.068	19		1/7	Grab
	PERMIT REQUIREMENT	.053 MO AVG	.102 DAILY MX	lbs/DAY	******	.11 MO AVG	.36 DAILY MX	MG/L		WEEKLY	GRAB
PHENOLS 34694 1 0 0 EFFLUENT GROSS VALUE	SAMPLE MEASUREMENT	.0027	.0066	01	******	.030	.05	19		1/7	Grab
	PERMIT REQUIREMENT	.08 MO AVG	1.76 DAILY MX	lbs/DAY	******	3 MO AVG	6 DAILY MX	MG/L		WEEKLY	GRAB
FLOW, IN CONDUIT OR THRU TREATMENT PLANT 50050 1 0 0 EFFLUENT GROSS VALUE	SAMPLE MEASUREMENT	.007	.017	03	******	******	******			Daily	Cont.
	PERMIT REQUIREMENT	REPORT MO AVG	.035 DAILY MX	MGD	******	******	******	*** ****		DAILY	CONTIN

NAME/TITLE PRINCIPAL EXECUTIVE OFFICER

Thomas L. Henderson

TYPED OR PRINTED

I CERTIFY UNDER PENALTY OF LAW THAT I HAVE PERSONALLY EXAMINED AND AM FAMILIAR WITH THE INFORMATION SUBMITTED HEREIN; AND BASED ON MY INQUIRY OF THOSE INDIVIDUALS IMMEDIATELY RESPONSIBLE FOR OBTAINING THE INFORMATION, I BELIEVE THE SUBMITTED INFORMATION IS TRUE, ACCURATE AND COMPLETE. I AM AWARE THAT THERE ARE SIGNIFICANT PENALTIES FOR SUBMITTING FALSE INFORMATION, INCLUDING THE POSSIBILITY OF FINE AND IMPRISONMENT. SEE 18 U.S.C. § 1001 AND 33 U.S.C. § 1319. *(Penalties under these statutes may include fines up to $10,000 and or maximum imprisonment of between 6 months and 5 years.)*

Plant Manager
Thomas L. Henderson

SIGNATURE OF PRINCIPAL EXECUTIVE OFFICER OR AUTHORIZED AGENT

TELEPHONE		DATE		
AREA CODE	NUMBER	YEAR	MO	DAY
601	226-4584	96	08	20

COMMENTS AND EXPLANATION OF ANY VIOLATIONS *(Reference all attachments here)*

PERMITTEE NAME/ADDRESS *(Include Facility Name/ Location if Different)*

NAME KOPPERS INDUSTRIES INC

ADDRESS P O BOX 160
TIE PLANT MS 38960

FILE GRENADA

NATIONAL POLLUTANT DISCHARGE ELIMINATION SYSTEM *(NPDES)*
DISCHARGE MONITORING REPORT *(DMR)*

Form Approved.
OMB No. 2040-0004
Approval expires 05-31-98

(2-16)	(17-19)
MSP000300	001 A
PERMIT NUMBER	DISCHARGE NUMBER

TOTAL FACILITY DISCHARGE
SUBR NO 12345
F - FINAL
MINOR

LAP

FACILITY
LOCATION
ATTN MR. RONALD MURPHEY

MONITORING PERIOD	YEAR	MO	DAY		YEAR	MO	DAY
FROM	96	06	01	TO	96	06	30
	(20-21)	(22-23)	(24-25)		(26-27)	(28-29)	(30-31)

*** NO DISCHARGE ***

NOTE: Read instructions before completing this form.

PARAMETER (32-37)		(3 Card Only) (46-53) QUANTITY OR LOADING (54-61) AVERAGE	MAXIMUM	UNITS	(4 Card Only) (38-45) QUANTITY OR CONCENTRATION (46-53) MINIMUM	AVERAGE	(54-61) MAXIMUM	UNITS	NO. EX (62-63)	FREQUENCY OF ANALYSIS (64-68)	SAMPLE TYPE (69-70)
BOD, 5-DAY 20 DEG. C 00310 1 0 0 EFFLUENT GROSS VALUE	SAMPLE MEASUREMENT	.5845	1.225	26	******	9.75	21	19		1/7	24hc
	PERMIT REQUIREMENT	70 MO AVG	140 DAILY MX	LBS/DY	******	240 MO AVG	480 DAILY MX	MG/L		WEEKLY	COMP24
PH 00400 1 0 0 EFFLUENT GROSS VALUE	SAMPLE MEASUREMENT	******	******		7.95	******	8.2	12		2/7	Grab
	PERMIT REQUIREMENT	******	******	**** ****	6.5 MINIMUM	******	9.5 MAXIMUM	SU		TWICE/WEEK	GRAB
SOLIDS, TOTAL SUSPENDED 00530 1 0 0 EFFLUENT GROSS VALUE	SAMPLE MEASUREMENT	2.521	3.444	26	******	42	59	19		1/7	24hc
	PERMIT REQUIREMENT	50 MO AVG	175 DAILY MX	LBS/DY	******	300 MO AVG	600 DAILY MX	MG/L		WEEKLY	COMP24
OIL & GREASE FREON EXTR.-IR METH TOT.RC 00560 1 0 0 EFFLUENT GROSS VALUE	SAMPLE MEASUREMENT	.0996	.2228	01 lbs/DAY	******	1.595	3.220	19		1/7	Grab
	PERMIT REQUIREMENT	REPORT MO AVG	29.2 DAILY MX		******	REPORT MO AVG	100 DAILY MX	MG/L		WEEKLY	GRAB
PENTACHLOROPHENOL 39032 1 0 0 EFFLUENT GROSS VALUE	SAMPLE MEASUREMENT	.00136	.0054	01 lbs/DAY	******	.010	.041	19		1/7	Grab
	PERMIT REQUIREMENT	.053 MO AVG	.102 DAILY MX		******	.16 MO AVG	.36 DAILY MX	MG/L		WEEKLY	GRAB
PHENOLS 32000 1 0 0 EFFLUENT GROSS VALUE	SAMPLE MEASUREMENT	.0028	.007	01 lbs/DAY	******	.0375	.054	19		1/7	Grab
	PERMIT REQUIREMENT	.88 MO AVG	1.75 DAILY MX		******	3 MO AVG	5 DAILY MX	MG/L		WEEKLY	GRAB
FLOW, IN CONDUIT OR THRU TREATMENT PLANT 50050 1 0 0 EFFLUENT GROSS VALUE	SAMPLE MEASUREMENT	.010	.019	03	******	******	******			Daily	Cont
	PERMIT REQUIREMENT	REPORT MO AVG	0.035 DAILY MX	MGD	******	******	******	**** ****		DAILY	CONTIN

NAME/TITLE PRINCIPAL EXECUTIVE OFFICER		TELEPHONE		DATE		
Thomas L. Henderson		601	226-4584	96	07	19
TYPED OR PRINTED		AREA CODE	NUMBER	YEAR	MO	DAY

I CERTIFY UNDER PENALTY OF LAW THAT I HAVE PERSONALLY EXAMINED AND AM FAMILIAR WITH THE INFORMATION SUBMITTED HEREIN; AND BASED ON MY INQUIRY OF THOSE INDIVIDUALS IMMEDIATELY RESPONSIBLE FOR OBTAINING THE INFORMATION, I BELIEVE THE SUBMITTED INFORMATION IS TRUE, ACCURATE AND COMPLETE. I AM AWARE THAT THERE ARE SIGNIFICANT PENALTIES FOR SUBMITTING FALSE INFORMATION, INCLUDING THE POSSIBILITY OF FINE AND IMPRISONMENT. SEE 18 U.S.C. § 1001 AND 33 U.S.C. § 1319. *(Penalties under these statutes may include fines up to $10,000 and or maximum imprisonment of between 6 months and 5 years.)*

Thomas L. Henderson Plant MGR

SIGNATURE OF PRINCIPAL EXECUTIVE OFFICER OR AUTHORIZED AGENT

COMMENTS AND EXPLANATION OF ANY VIOLATIONS *(Reference all attachments here)*

NAME KOPPERS INDUSTRIES INC

ADDRESS P. O BOX 160
TIE PLANT MS 38960

FACILITY
LOCATION
ATTN MR. RONALD MURPHEY

NATIONAL POLLUTANT DISCHARGE ELIMINATION SYSTEM (NPDES)
DISCHARGE MONITORING REPORT (DMR)
(2-16) (17-19)

MSP090300 — PERMIT NUMBER

001 A — DISCHARGE NUMBER

TOTAL FACILITY DISCHARGE
SUBR NO 12345
F - FINAL
MINOR

Form Approved.
OMB No. 2040-0004
Approval expires 05-31-98

LAP

MONITORING PERIOD	YEAR	MO	DAY		YEAR	MO	DAY
FROM	95	05	01	TO	96	05	31
	(20-21)	(22-23)	(24-25)		(26-27)	(28-29)	(30-31)

*** NO DISCHARGE ***

NOTE: Read instructions before completing this form.

PARAMETER (32-37)		QUANTITY OR LOADING (3 Card Only) (46-53) AVERAGE	MAXIMUM (54-61)	UNITS	QUANTITY OR CONCENTRATION (4 Card Only) (38-45) MINIMUM	(46-53) AVERAGE	(54-61) MAXIMUM	UNITS	NO. EX (62-63)	FREQUENCY OF ANALYSIS (64-68)	SAMPLE TYPE (69-70)
BOD, 5-DAY 20 DEG. C 00310 1 0 0 EFFLUENT GROSS VALUE	SAMPLE MEASUREMENT	1.743	5.55	26	******	31.05	111	19		1/7	24hc
	PERMIT REQUIREMENT	70 MO AVG	140 DAILY MX	LBS/DY	******	240 MO AVG	480 DAILY MX	MG/L		WEEKLY	COMP24
PH 00400 1 0 0 EFFLUENT GROSS VALUE	SAMPLE MEASUREMENT	******	******		7.90	******	8.60	12		2/7	Grab
	PERMIT REQUIREMENT	******	******	**** ****	6.0 MINIMUM	******	9.5 MAXIMUM	SU		TWICE/WEEK	GRAB
SOLIDS, TOTAL SUSPENDED 00530 1 0 0 EFFLUENT GROSS VALUE	SAMPLE MEASUREMENT	3.1125	7.589	26	******	38	41	19		1/7	24hc
	PERMIT REQUIREMENT	38 MO AVG	75 DAILY MX	LBS/DY	******	300 MO AVG	600 DAILY MX	MG/L		WEEKLY	COMP24
OIL & GREASE FREON EXTR.-IR METH TOT,RC 00560 1 0 0 EFFLUENT GROSS VALUE	SAMPLE MEASUREMENT	.0758	.192	01	******	.8675	2.05	19		1/7	Grab
	PERMIT REQUIREMENT	REPORT MO AVG	29.2 DAILY MX	lbs ~~KG~~ DAY	******	REPORT MO AVG	100 DAILY MX	MG/L		WEEKLY	GRAB
PENTACHLOROPHENOL 39032 1 0 0 EFFLUENT GROSS VALUE	SAMPLE MEASUREMENT	.00008	.00033	01	******	.0025	.01	19		1/7	Grab
	PERMIT REQUIREMENT	.053 MO AVG	.102 DAILY MX	lbs ~~KG~~ DAY	******	.15 MO AVG	.36 DAILY MX	MG/L		WEEKLY	GRAB
PHENOLS 32730 1 0 0 EFFLUENT GROSS VALUE	SAMPLE MEASUREMENT	.0023	.0065	01	******	.024	.006	19		1/7	Grab
	PERMIT REQUIREMENT	.58 MO AVG	1.75 DAILY MX	lbs ~~KG~~ DAY	******	3 MO AVG	5 DAILY MX	MG/L		WEEKLY	GRAB
FLOW, IN CONDUIT OR THRU TREATMENT PLANT 50050 1 0 0 EFFLUENT GROSS VALUE	SAMPLE MEASUREMENT	.011	.027	03	******	******	******			Daily	Cont.
	PERMIT REQUIREMENT	REPORT MO AVG	0.035 DAILY MX	MGD	******	******	******	**** ****		DAILY	CONTIN

NAME/TITLE PRINCIPAL EXECUTIVE OFFICER

Thomas L. Henderson / Plant Mgr
TYPED OR PRINTED

I CERTIFY UNDER PENALTY OF LAW THAT I HAVE PERSONALLY EXAMINED AND AM FAMILIAR WITH THE INFORMATION SUBMITTED HEREIN; AND BASED ON MY INQUIRY OF THOSE INDIVIDUALS IMMEDIATELY RESPONSIBLE FOR OBTAINING THE INFORMATION, I BELIEVE THE SUBMITTED INFORMATION IS TRUE, ACCURATE AND COMPLETE. I AM AWARE THAT THERE ARE SIGNIFICANT PENALTIES FOR SUBMITTING FALSE INFORMATION, INCLUDING THE POSSIBILITY OF FINE AND IMPRISONMENT. SEE 18 U.S.C. § 1001 AND 33 U.S.C. § 1319. *(Penalties under these statutes may include fines up to $10,000 and or maximum imprisonment of between 6 months and 5 years.)*

Thomas L. Henderson / Plant Mgr
SIGNATURE OF PRINCIPAL EXECUTIVE OFFICER OR AUTHORIZED AGENT

TELEPHONE		DATE		
AREA CODE	NUMBER	YEAR	MO	DAY
601	226-4584	96	06	24

COMMENTS AND EXPLANATION OF ANY VIOLATIONS *(Reference all attachments here)*

EPA Form 3320-1 (08-95) Previous editions may be used. (REPLACES EPA FORM T-40 WHICH MAY NOT BE USED.)

00227/960205-1534

NAME KOPPERS INDUSTRIES INC
ADDRESS P O BOX 100
TIE PLANT MS 38560

FILE GRENADA

NATIONAL POLLUTANT DISCHARGE ELIMINATION SYSTEM (NPDES)
DISCHARGE MONITORING REPORT (DMR)

Form Approved.
OMB No. 2040-0004
Approval expires 05-31-98

PERMIT NUMBER (2-16)	DISCHARGE NUMBER (17-19)
MSP090000	001 A

TOTAL FACILITY DISCHARGE
SUBR NO 1234
F - FINAL
MINOR

BDC

FACILITY
LOCATION
ATTN MR. RONALD MURPHEY

MONITORING PERIOD	YEAR	MO	DAY
FROM	95	04	01
TO	96	04	30
	(20-21)	(22-23)	(24-25)
	(26-27)	(28-29)	(30-31)

*** NO DISCHARGE ***

NOTE: Read instructions before completing this form.

PARAMETER (32-37)		(3 Card Only) QUANTITY OR LOADING (46-53) AVERAGE	(54-61) MAXIMUM	UNITS	(4 Card Only) QUANTITY OR CONCENTRATION (38-45) MINIMUM	(46-53) AVERAGE	(54-61) MAXIMUM	UNITS	NO. EX (62-63)	FREQUENCY OF ANALYSIS (64-68)	SAMPLE TYPE (69-70)
00, 5-DAY 20 DEG. C 00310 1 0 0 EFFLUENT GROSS VALUE	SAMPLE MEASUREMENT	1.02	3.64	26	******	9.46	15.6	19		1/7	24hc
	PERMIT REQUIREMENT	70 MO AVG	140 DAILY MX	LBS/DY	******	240 MO AVG	480 DAILY MX	MG/L		WEEKLY	COMP24
PH 00400 1 0 0 EFFLUENT GROSS VALUE	SAMPLE MEASUREMENT	******	******		7.90	******	8.70	12		2/7	Grab
	PERMIT REQUIREMENT	******	******	*** ****	6.0 MINIMUM	******	9.5 MAXIMUM	SU		TWICE/WEEK	GRAB
SOLIDS, TOTAL SUSPENDED 00530 1 0 0 EFFLUENT GROSS VALUE	SAMPLE MEASUREMENT	5.91	20.54	26	******	54.6	88	19		1/7	24hc
	PERMIT REQUIREMENT	35 MO AVG	175 DAILY MX	LBS/DY	******	300 MO AVG	600 DAILY MX	MG/L		WEEKLY	COMP24
OIL & GREASE FREON EXTR.-IR METH TOT,RC 00560 1 0 0 EFFLUENT GROSS VALUE	SAMPLE MEASUREMENT	.285	1.46	01	******	2.63	6.27	19		1/7	Grab
	PERMIT REQUIREMENT	REPORT MO AVG	29.2 DAILY MX	KG/DAY	******	REPORT MO AVG	100 DAILY MX	MG/L		WEEKLY	GRAB
PENTACHLOROPHENOL 39032 1 0 0 EFFLUENT GROSS VALUE	SAMPLE MEASUREMENT	.0016	.007	01	******	.0152	.03	19		1/7	Grab
	PERMIT REQUIREMENT	.053 MO AVG	.102 DAILY MX	KG/DAY	******	.13 MO AVG	.36 DAILY MX	MG/L		WEEKLY	GRAB
PHENOLS 32730 1 0 0 EFFLUENT GROSS VALUE	SAMPLE MEASUREMENT	.0064	.0268	01	******	.064	.115	19		1/7	Grab
	PERMIT REQUIREMENT	.08 MO AVG	.75 DAILY MX	KG/DAY	******	3 MO AVG	6 DAILY MX	MG/L		WEEKLY	GRAB
FLOW, IN CONDUIT OR THRU TREATMENT PLANT 50050 1 0 0 EFFLUENT GROSS VALUE	SAMPLE MEASUREMENT	.013	.028	03	******	******	******			Daily	Cont.
	PERMIT REQUIREMENT	REPORT MO AVG	.035 DAILY MX	MGD	******	******	******	*** ****		DAILY	CONTIN

NAME/TITLE PRINCIPAL EXECUTIVE OFFICER

Thomas L. Henderson

TYPED OR PRINTED

I CERTIFY UNDER PENALTY OF LAW THAT I HAVE PERSONALLY EXAMINED AND AM FAMILIAR WITH THE INFORMATION SUBMITTED HEREIN; AND BASED ON MY INQUIRY OF THOSE INDIVIDUALS IMMEDIATELY RESPONSIBLE FOR OBTAINING THE INFORMATION, I BELIEVE THE SUBMITTED INFORMATION IS TRUE, ACCURATE AND COMPLETE. I AM AWARE THAT THERE ARE SIGNIFICANT PENALTIES FOR SUBMITTING FALSE INFORMATION, INCLUDING THE POSSIBILITY OF FINE AND IMPRISONMENT. SEE 18 U.S.C. § 1001 AND 33 U.S.C. § 1319. *(Penalties under these statutes may include fines up to $10,000 and or maximum imprisonment of between 6 months and 5 years.)*

Thomas L. Henderson

SIGNATURE OF PRINCIPAL EXECUTIVE OFFICER OR AUTHORIZED AGENT

TELEPHONE		DATE		
601	226-4584	96	05	21
AREA CODE	NUMBER	YEAR	MO	DAY

COMMENTS AND EXPLANATION OF ANY VIOLATIONS *(Reference all attachments here)*

NAME KOPPERS INDUSTRIES INC
ADDRESS P.O. BOX 150
TIE PLANT MS 38960

FACILITY
LOCATION
ATTN MR. RONALD MURPHEY

PT GRENADA

NATIONAL POLLUTANT DISCHARGE ELIMINATION SYSTEM (NPDES)
DISCHARGE MONITORING REPORT (DMR)

MSP090300	001 A
PERMIT NUMBER (2-16)	DISCHARGE NUMBER (17-19)

TOTAL FACILITY DISCHARGE
SUBR NO 12345
F - FINAL
MINOR

Form Approved.
OMB No. 2040-0004
Approval expires 05-31-98

BDC

MONITORING PERIOD	YEAR	MO	DAY		YEAR	MO	DAY
FROM	96	03	01	TO	96	03	31
	(20-21)	(22-23)	(24-25)		(26-27)	(28-29)	(30-31)

*** NO DISCHARGE ***

NOTE: Read instructions before completing this form.

PARAMETER (32-37)		(3 Card Only) (46-53) QUANTITY OR LOADING (54-61) AVERAGE	MAXIMUM	UNITS	(4 Card Only) (38-45) QUANTITY OR CONCENTRATION (46-53) MINIMUM	(54-61) AVERAGE	MAXIMUM	UNITS	NO. EX (62-63)	FREQUENCY OF ANALYSIS (64-68)	SAMPLE TYPE (69-70)
BOD, 5-DAY 20 DEG. C 00310 1 0 0 EFFLUENT GROSS VALUE	SAMPLE MEASUREMENT	1,807	4,553	25	******	12.75	15.6	19		1/7	24hr
	PERMIT REQUIREMENT	70 MO AVG	140 DAILY MX	LBS/DY	******	240 MO AVG	480 DAILY MX	MG/L		WEEKLY	COMP24
00400 1 0 0 EFFLUENT GROSS VALUE	SAMPLE MEASUREMENT	******	******		7.95	******	8.20	12		2/7	Grab
	PERMIT REQUIREMENT	******	******	*****	6.5 MINIMUM	******	9.5 MAXIMUM	SU		TWICE/WEEK	GRAB
SOLIDS, TOTAL SUSPENDED 00530 1 0 0 EFFLUENT GROSS VALUE	SAMPLE MEASUREMENT	5.78	28.31	26	******	40.8	98	19		1/7	24hr
	PERMIT REQUIREMENT	30 MO AVG	75 DAILY MX	LBS/DY	******	300 MO AVG	600 DAILY MX	MG/L		WEEKLY	COMP24
OIL & GREASE FREON EXTR.-IR METH TOT,SC 00560 1 0 0 EFFLUENT GROSS VALUE	SAMPLE MEASUREMENT	.425	1.342	01	******	3.0	4.6	19		1/7	Grab
	PERMIT REQUIREMENT	REPORT MO AVG	25.2 DAILY MX	lb/DAY	******	REPORT MO AVG	100 DAILY MX	MG/L		WEEKLY	GRAB
PENTACHLOROPHENOL 39032 1 0 0 EFFLUENT GROSS VALUE	SAMPLE MEASUREMENT	.0002	.0018	01	******	.0015	.006	19		1/7	Grab
	PERMIT REQUIREMENT	.053 MO AVG	.102 DAILY MX	lb/DAY	******	.18 MO AVG	.36 DAILY MX	MG/L		WEEKLY	GRAB
PHENOLS 32730 1 0 0 EFFLUENT GROSS VALUE	SAMPLE MEASUREMENT	.0065	.0201	01	******	.0485	.069	19		1/7	Grab
	PERMIT REQUIREMENT	.088 MO AVG	.176 DAILY MX	lb/DAY	******	3 MO AVG	6 DAILY MX	MG/L		WEEKLY	GRAB
FLOW, IN CONDUIT OR THRU TREATMENT PLANT 50050 1 0 0 EFFLUENT GROSS VALUE	SAMPLE MEASUREMENT	.017	.035	03	******	******	******			Daily	Cont.
	PERMIT REQUIREMENT	REPORT MO AVG	.035 DAILY MX	MGD	******	******	******	*****		DAILY	CONTIN

NAME/TITLE PRINCIPAL EXECUTIVE OFFICER		TELEPHONE		DATE		
Thomas L. Henderson	I CERTIFY UNDER PENALTY OF LAW THAT I HAVE PERSONALLY EXAMINED AND AM FAMILIAR WITH THE INFORMATION SUBMITTED HEREIN; AND BASED ON MY INQUIRY OF THOSE INDIVIDUALS IMMEDIATELY RESPONSIBLE FOR OBTAINING THE INFORMATION, I BELIEVE THE SUBMITTED INFORMATION IS TRUE, ACCURATE AND COMPLETE. I AM AWARE THAT THERE ARE SIGNIFICANT PENALTIES FOR SUBMITTING FALSE INFORMATION, INCLUDING THE POSSIBILITY OF FINE AND IMPRISONMENT. SEE 18 U.S.C. § 1001 AND 33 U.S.C. § 1319. *(Penalties under these statutes may include fines up to $10,000 and or maximum imprisonment of between 6 months and 5 years.)*	Thomas L. Henderson	601	226-4588	96	04	24
TYPED OR PRINTED		SIGNATURE OF PRINCIPAL EXECUTIVE OFFICER OR AUTHORIZED AGENT	AREA CODE	NUMBER	YEAR	MO	DAY

COMMENTS AND EXPLANATION OF ANY VIOLATIONS *(Reference all attachments here)*

PERMITTEE NAME/ADDRESS *(Include Facility Name/ Location if Different)*
NAME KOPPERS INDUSTRIES INC
ADDRESS P O BOX 160
TIE PLANT MS 38960

FILE: GRENADA

NATIONAL POLLUTANT DISCHARGE ELIMINATION SYSTEM *(NPDES)*
DISCHARGE MONITORING REPORT *(DMR)*

(2-16) PERMIT NUMBER	(17-19) DISCHARGE NUMBER
MSP090300	001 A

Form Approved. OMB No. 2040-0004 Approval expires 05-31-98

TOTAL FACILITY DISCHARGE
SUBR NO 12345
F - FINAL
MINOR

BDC

MONITORING PERIOD	YEAR	MO	DAY		YEAR	MO	DAY
FROM	96	02	01	TO	96	02	29
	(20-21)	(22-23)	(24-25)		(26-27)	(28-29)	(30-31)

FACILITY
LOCATION
ATTN MR. RONALD MURPHEY

*** NO DISCHARGE ***

NOTE: Read instructions before completing this form.

PARAMETER (32-37)		(3 Card Only) QUANTITY OR LOADING (46-53) AVERAGE	(54-61) MAXIMUM	UNITS	(4 Card Only) QUANTITY OR CONCENTRATION (38-45) MINIMUM	(46-53) AVERAGE	(54-61) MAXIMUM	UNITS	NO. EX (62-63)	FREQUENCY OF ANALYSIS (64-68)	SAMPLE TYPE (69-70)
BOD, 5-DAY 20 DEG. C	SAMPLE MEASUREMENT	2.39	6.73	25	******	20.75	28.8	19		1/7	24hC
00310 1 0 0 EFFLUENT GROSS VALUE	PERMIT REQUIREMENT	70 MO AVG	140 DAILY MX	LBS/DY	******	240 MO AVG	480 DAILY MX	MG/L		WEEKLY	COMP24
pH	SAMPLE MEASUREMENT	******	******		6.71	******	8.5	12		2/7	Grab
00400 1 0 0 EFFLUENT GROSS VALUE	PERMIT REQUIREMENT	******	******	**** *****	6.5 MINIMUM	******	9.5 MAXIMUM	SU		TWICE/WEEK	GRAB
SOLIDS, TOTAL SUSPENDED	SAMPLE MEASUREMENT	12.2	40.2	26	******	104.8	172	19		1/7	24hc
00530 1 0 0 EFFLUENT GROSS VALUE	PERMIT REQUIREMENT	88 MO AVG	175 DAILY MX	LBS/DY	******	300 MO AVG	600 DAILY MX	MG/L		WEEKLY	COMP24
OIL & GREASE FREON EXTR.-IR METH TOT,RC	SAMPLE MEASUREMENT	.433	1.36 lb	01	******	3.71	5.83	19		1/7	Grab
00560 1 0 0 EFFLUENT GROSS VALUE	PERMIT REQUIREMENT	REPORT MO AVG	29.2 DAILY MX	lb/DAY	******	REPORT MO AVG	100 DAILY MX	MG/L		WEEKLY	GRAB
PENTACHLOROPHENOL	SAMPLE MEASUREMENT	.001	.004 lb	01	******	.009	.018	19		1/7	Grab
39032 1 0 0 EFFLUENT GROSS VALUE	PERMIT REQUIREMENT	.053 MO AVG	.102 DAILY MX	lb/DAY	******	.18 MO AVG	.36 DAILY MX	MG/L		WEEKLY	GRAB
PHENOLS	SAMPLE MEASUREMENT	.013	.036 lb	01	******	.1115	.157	19		1/7	Grab
46000 1 0 0 EFFLUENT GROSS VALUE	PERMIT REQUIREMENT	.88 MO AVG	1.75 DAILY MX	lb/DAY	******	3 MO AVG	6 DAILY MX	MG/L		WEEKLY	GRAB
FLOW, IN CONDUIT OR THRU TREATMENT PLANT	SAMPLE MEASUREMENT	.014	.028	03	******	******	******			Daily	Cont.
50050 1 0 0 EFFLUENT GROSS VALUE	PERMIT REQUIREMENT	REPORT MO AVG	.035 DAILY MX	MGD	******	******	******	**** ****		DAILY	CONTIN

NAME/TITLE PRINCIPAL EXECUTIVE OFFICER		SIGNATURE OF PRINCIPAL EXECUTIVE OFFICER OR AUTHORIZED AGENT	TELEPHONE (AREA CODE)	TELEPHONE (NUMBER)	DATE YEAR	DATE MO	DATE DAY
Thomas L. Henderson / Plant Manager	I CERTIFY UNDER PENALTY OF LAW THAT I HAVE PERSONALLY EXAMINED AND AM FAMILIAR WITH THE INFORMATION SUBMITTED HEREIN; AND BASED ON MY INQUIRY OF THOSE INDIVIDUALS IMMEDIATELY RESPONSIBLE FOR OBTAINING THE INFORMATION, I BELIEVE THE SUBMITTED INFORMATION IS TRUE, ACCURATE AND COMPLETE. I AM AWARE THAT THERE ARE SIGNIFICANT PENALTIES FOR SUBMITTING FALSE INFORMATION, INCLUDING THE POSSIBILITY OF FINE AND IMPRISONMENT. SEE 18 U.S.C. § 1001 AND 33 U.S.C. § 1319. *(Penalties under these statutes may include fines up to $10,000 and or maximum imprisonment of between 6 months and 5 years.)*	Thomas L. Henderson	601	226-4584	96	03	22
TYPED OR PRINTED							

COMMENTS AND EXPLANATION OF ANY VIOLATIONS *(Reference all attachments here)*

See Attached letters

EPA Form 3320-1 (08-95) Previous editions may be used. (REPLACES EPA FORM T-40 WHICH MAY NOT BE USED.) 00224/960206-1534

NAME KOPPERS INDUSTRIES INC
ADDRESS P O BOX 160
TIE PLANT MS 38960

FACILITY
LOCATION
ATTN MR. RONALD MURPHEY

NATIONAL POLLUTANT DISCHARGE ELIMINATION SYSTEM (NPDES)
DISCHARGE MONITORING REPORT (DMR)

PERMIT NUMBER (2-16): MSP090300
DISCHARGE NUMBER (17-19): 001 A

TOTAL FACILITY DISCHARGE
SUBR NO 12345
F - FINAL
MINOR

Form Approved. OMB No. 2040-0004 Approval expires 05-31-98

MONITORING PERIOD
FROM YEAR 96 MO 01 DAY 01 (20-21) (22-23) (24-25)
TO YEAR 96 MO 01 DAY 31 (26-27) (28-29) (30-31)

*** NO DISCHARGE ***

NOTE: Read instructions before completing this form.

PARAMETER (32-37)		QUANTITY OR LOADING (3 Card Only) (46-53) AVERAGE	(54-61) MAXIMUM	UNITS	QUANTITY OR CONCENTRATION (4 Card Only) (38-45) MINIMUM	(46-53) AVERAGE	(54-61) MAXIMUM	UNITS	NO. EX (62-63)	FREQUENCY OF ANALYSIS (64-68)	SAMPLE TYPE (69-70)
BOD, 5-DAY 20 DEG. C 00310 1 0 0 EFFLUENT GROSS VALUE	SAMPLE MEASUREMENT	1.47	6.77	26	******	10.38	31.2	19		1/7	24hc
	PERMIT REQUIREMENT	70 MO AVG	140 DAILY MX	LBS/DY	******	240 MO AVG	480 DAILY MX	MG/L		WEEKLY	COMP24
00400 1 0 0 EFFLUENT GROSS VALUE	SAMPLE MEASUREMENT	******	******		8.10	******	8.40	12		2/7	Grab
	PERMIT REQUIREMENT	******	******	**** ****	5.5 MINIMUM	******	9.5 MAXIMUM	SU		TWICE/WEEK	GRAB
SOLIDS, TOTAL SUSPENDED 00530 1 0 0 EFFLUENT GROSS VALUE	SAMPLE MEASUREMENT	7.26	38.8	26	******	51.2 ~~7.26~~	177 ~~38.8~~	19		1/7	24hc
	PERMIT REQUIREMENT	38 MO AVG	175 DAILY MX	LBS/DY	******	300 MO AVG	600 DAILY MX	MG/L		WEEKLY	COMP24
OIL & GREASE FREON EXTR.-IR METH TOT,RC 00560 1 0 0 EFFLUENT GROSS VALUE	SAMPLE MEASUREMENT	.1809	.6505	01	******	1.276	3.0	19		1/7	Grab
	PERMIT REQUIREMENT	REPORT MO AVG	29.2 DAILY MX	~~LBS/KG~~/DAY	******	REPORT MO AVG	100 DAILY MX	MG/L		WEEKLY	GRAB
PENTACHLOROPHENOL 39032 1 0 0 EFFLUENT GROSS VALUE	SAMPLE MEASUREMENT	.0061	.0008	01	******	.008	.004	19		1/7	Grab
	PERMIT REQUIREMENT	.053 MO AVG	.102 DAILY MX	~~LBS/KG~~/DAY	******	.18 MO AVG	.36 DAILY MX	MG/L		WEEKLY	GRAB
PHENOLS 46000 1 0 0 EFFLUENT GROSS VALUE	SAMPLE MEASUREMENT	.10037 ~~.0262~~	.0095 ~~.044~~	01	******	.0262 ~~.0037~~	.044 ~~.0095~~	19		1/7	Grab
	PERMIT REQUIREMENT	.88 MO AVG	1.75 DAILY MX	~~LBS/KG~~/DAY	******	3 MO AVG	6 DAILY MX	MG/L		WEEKLY	GRAB
FLOW, IN CONDUIT OR THRU TREATMENT PLANT 50050 1 0 0 EFFLUENT GROSS VALUE	SAMPLE MEASUREMENT	.017	.026	03	******	******	******			Daily	Cont.
	PERMIT REQUIREMENT	REPORT MO AVG	0.035 DAILY MX	MGD	******	******	******	**** ****		DAILY	CONTIN

NAME/TITLE PRINCIPAL EXECUTIVE OFFICER: Ronald P. Murphey
TYPED OR PRINTED

I CERTIFY UNDER PENALTY OF LAW THAT I HAVE PERSONALLY EXAMINED AND AM FAMILIAR WITH THE INFORMATION SUBMITTED HEREIN; AND BASED ON MY INQUIRY OF THOSE INDIVIDUALS IMMEDIATELY RESPONSIBLE FOR OBTAINING THE INFORMATION, I BELIEVE THE SUBMITTED INFORMATION IS TRUE, ACCURATE AND COMPLETE. I AM AWARE THAT THERE ARE SIGNIFICANT PENALTIES FOR SUBMITTING FALSE INFORMATION, INCLUDING THE POSSIBILITY OF FINE AND IMPRISONMENT. SEE 18 U.S.C. § 1001 AND 33 U.S.C. § 1319. (Penalties under these statutes may include fines up to $10,000 and or maximum imprisonment of between 6 months and 5 years.)

Ronald P. Murphey
SIGNATURE OF PRINCIPAL EXECUTIVE OFFICER OR AUTHORIZED AGENT

TELEPHONE: AREA CODE 601 NUMBER 226-4589
DATE: YEAR 96 MO 02 DAY 27

COMMENTS AND EXPLANATION OF ANY VIOLATIONS (Reference all attachments here)

PERMITTEE NAME/ADDRESS *(Include Facility Name/Location if Different)*
NAME
ADDRESS
FACILITY
LOCATION

ATTN: RONALD MURPHEY

RECEIVED FEB 29 1996 Mississippi Department of Environmental Quality Office of Pollution Control

FILE GRENADA

NATIONAL POLLUTANT DISCHARGE ELIMINATION SYSTEM *(NPDES)*
DISCHARGE MONITORING REPORT *(DMR)*

Form Approved. OMB No. 2040-0004 Approval expires 05-31-98

(2-16)	(17-19)
MS0090300	001 A
PERMIT NUMBER	DISCHARGE NUMBER

TOTAL FACILITY DISCHARGE
SUBR NO 12345
F - FINAL
MINOR

BDC

MONITORING PERIOD	YEAR	MO	DAY		YEAR	MO	DAY
FROM	96	01	01	TO	96	01	31
	(20-21)	(22-23)	(24-25)		(26-27)	(28-29)	(30-31)

*** NO DISCHARGE ***

NOTE: Read instructions before completing this form.

PARAMETER (32-37)		(3 Card Only) (46-53) QUANTITY OR LOADING AVERAGE	(54-61) MAXIMUM	UNITS	(4 Card Only) (38-45) QUANTITY OR CONCENTRATION MINIMUM	(46-53) AVERAGE	(54-61) MAXIMUM	UNITS	NO. EX (62-63)	FREQUENCY OF ANALYSIS (64-68)	SAMPLE TYPE (69-70)
BOD, 5-DAY 20 DEG. C 00310 1 0 0 EFFLUENT GROSS VALUE	SAMPLE MEASUREMENT	1.47	6.77	26	******	10.38	31.2	19		1/7	24hc
	PERMIT REQUIREMENT	20 MO AVG	140 DAILY MX	LBS/DY	******	240 MO AVG	480 DAILY MX	MG/L		WEEKLY	COMP24
PH 00400 1 0 0 EFFLUENT GROSS VALUE	SAMPLE MEASUREMENT	******	******		8.10	******	8.40	12		2/7	Grab
	PERMIT REQUIREMENT	******	******	**** ****	6.5 MINIMUM	******	9.5 MAXIMUM	SU		TWICE/ WEEK	GRAB
SOLIDS, TOTAL SUSPENDED 00530 1 0 0 EFFLUENT GROSS VALUE	SAMPLE MEASUREMENT	7.26	38.8	26	******	51.2 ~~7.26~~	177 ~~38.8~~	19		1/7	24hc
	PERMIT REQUIREMENT	38 MO AVG	175 DAILY MX	LBS/DY	******	300 MO AVG	600 DAILY MX	MG/L		WEEKLY	COMP24
OIL & GREASE FREON EXTR.-IR METH TOT,RC 00560 1 0 0 EFFLUENT GROSS VALUE	SAMPLE MEASUREMENT	.1809	.6505	01	******	1.276	3.0	19		1/7	Grab
	PERMIT REQUIREMENT	REPORT MO AVG	29.2 LBS/ DAILY MX	DAY	******	REPORT MO AVG	100 DAILY MX	MG/L		WEEKLY	GRAB
PENTACHLOROPHENOL 39032 1 0 0 EFFLUENT GROSS VALUE	SAMPLE MEASUREMENT	.0001	.0008	01	******	.008	.004	19		1/7	Grab
	PERMIT REQUIREMENT	.053 MO AVG	.102 LBS/ DAILY MX	DAY	******	.18 MO AVG	.36 DAILY MX	MG/L		WEEKLY	GRAB
PHENOLS 32730 1 0 0 EFFLUENT GROSS VALUE	SAMPLE MEASUREMENT	.0037 ~~.0262~~	.0095 ~~.044~~	01	******	.0262 ~~.0037~~	.044 ~~.0095~~	19		1/7	Grab
	PERMIT REQUIREMENT	.86 MO AVG	1.75 LBS/ DAILY MX	DAY	******	3 MO AVG	6 DAILY MX	MG/L		WEEKLY	GRAB
FLOW, IN CONDUIT OR THRU TREATMENT PLANT 50050 1 0 0 EFFLUENT GROSS VALUE	SAMPLE MEASUREMENT		.026	03	******	******	******			Daily	Cont.
	PERMIT REQUIREMENT	REPORT MO AVG	.025 DAILY MX	MGD	******	******	******	**** ****		DAILY	CONTIN

NAME/TITLE PRINCIPAL EXECUTIVE OFFICER		TELEPHONE		DATE		
Ronald P. Murphey	I CERTIFY UNDER PENALTY OF LAW THAT I HAVE PERSONALLY EXAMINED AND AM FAMILIAR WITH THE INFORMATION SUBMITTED HEREIN; AND BASED ON MY INQUIRY OF THOSE INDIVIDUALS IMMEDIATELY RESPONSIBLE FOR OBTAINING THE INFORMATION, I BELIEVE THE SUBMITTED INFORMATION IS TRUE, ACCURATE AND COMPLETE. I AM AWARE THAT THERE ARE SIGNIFICANT PENALTIES FOR SUBMITTING FALSE INFORMATION, INCLUDING THE POSSIBILITY OF FINE AND IMPRISONMENT. SEE 18 U.S.C. § 1001 AND 33 U.S.C. § 1319. *(Penalties under these statutes may include fines up to $10,000 and or maximum imprisonment of between 6 months and 5 years.)*	Ronald P. Murphey	601/226-4584	96	02	27
TYPED OR PRINTED		SIGNATURE OF PRINCIPAL EXECUTIVE OFFICER OR AUTHORIZED AGENT	AREA CODE / NUMBER	YEAR	MO	DAY

COMMENTS AND EXPLANATION OF ANY VIOLATIONS *(Reference all attachments here)*

PERMITTEE NAME/ADDRESS (Include Facility Name, Location, City/County)

NAME KOPPERS INDUSTRIES INC

ADDRESS P O BOX 160
TIE PLANT MS 38960

FACILITY

LOCATION

ATTN MR. RONALD MURPHEY

NATIONAL POLLUTANT DISCHARGE ELIMINATION SYSTEM (NPDES)

DISCHARGE MONITORING REPORT (DMR)

Form Approved.
OMB No. 2040-0004
Approval expires 05-31-98

PERMIT NUMBER (2-16)	DISCHARGE NUMBER (17-19)
MS0090308	001 Y

TOTAL FACILITY DISCHARGE
SUBR NO 12345
F - FINAL
MINOR

MONITORING PERIOD	YEAR	MO	DAY		YEAR	MO	DAY
FROM	95	01	01	TO	95	06	30
	(20-21)	(22-23)	(24-25)		(26-27)	(28-29)	(30-31)

*** NO DISCHARGE ***

NOTE: Read instructions before completing this form.

PARAMETER (32-37)		(3 Card Only) (46-53) QUANTITY OR LOADING (54-61) AVERAGE	MAXIMUM	UNITS	(4 Card Only) (38-45) QUANTITY OR CONCENTRATION (46-53) MINIMUM	AVERAGE	(54-61) MAXIMUM	UNITS	NO. EX (62-63)	FREQUENCY OF ANALYSIS (64-68)	SAMPLE TYPE (69-70)
ARSENIC, TOTAL RECOVERABLE 00978 1 0 0 EFFLUENT GROSS VALUE	SAMPLE MEASUREMENT	0	0	26	******	0	0	19		S/A	24hc
	PERMIT REQUIREMENT	REPORT ANNL AVG	.131 ANNL MAX	LBS/DY	******	REPORT ANNL AVG	.45 ANNL MAX	MG/L		SEMI-ANNUAL	COMP24
CADMIUM TOTAL RECOVERABLE 01118 1 0 0 EFFLUENT GROSS VALUE	SAMPLE MEASUREMENT	0	0	26	******	0	0	19		S/A	24hc
	PERMIT REQUIREMENT	REPORT ANNL AVG	.169 ANNL MAX	LBS/DY	******	REPORT ANNL AVG	4.0 ANNL MAX	MG/L		SEMI-ANNUAL	COMP24
COPPER TOTAL RECOVERABLE 01119 1 0 0 EFFLUENT GROSS VALUE	SAMPLE MEASUREMENT	0	0	26	******	0	0	19		S/A	24hc
	PERMIT REQUIREMENT	REPORT ANNL AVG	.642 ANNL MAX	LBS/DY	******	REPORT ANNL AVG	2.2 ANNL MAX	MG/L		SEMI-ANNUAL	COMP24
	SAMPLE MEASUREMENT										
	PERMIT REQUIREMENT										
	SAMPLE MEASUREMENT										
	PERMIT REQUIREMENT										
	SAMPLE MEASUREMENT										
	PERMIT REQUIREMENT										
	SAMPLE MEASUREMENT										
	PERMIT REQUIREMENT										

NAME/TITLE PRINCIPAL EXECUTIVE OFFICER

Thomas L. Henderson / Plant Manager

TYPED OR PRINTED

I CERTIFY UNDER PENALTY OF LAW THAT I HAVE PERSONALLY EXAMINED AND AM FAMILIAR WITH THE INFORMATION SUBMITTED HEREIN; AND BASED ON MY INQUIRY OF THOSE INDIVIDUALS IMMEDIATELY RESPONSIBLE FOR OBTAINING THE INFORMATION, I BELIEVE THE SUBMITTED INFORMATION IS TRUE, ACCURATE AND COMPLETE. I AM AWARE THAT THERE ARE SIGNIFICANT PENALTIES FOR SUBMITTING FALSE INFORMATION, INCLUDING THE POSSIBILITY OF FINE AND IMPRISONMENT. SEE 18 U.S.C. § 1001 AND 33 U.S.C. § 1319. *(Penalties under these statutes may include fines up to $10,000 and or maximum imprisonment of between 6 months and 5 years.)*

Thomas L. Henderson

SIGNATURE OF PRINCIPAL EXECUTIVE OFFICER OR AUTHORIZED AGENT

TELEPHONE		DATE		
601	226-4581	96	03	22
AREA CODE	NUMBER	YEAR	MO	DAY

COMMENTS AND EXPLANATION OF ANY VIOLATIONS *(Reference all attachments here)*

EPA Form 3320-1 (08-95) Previous editions may be used. (REPLACES EPA FORM T-40 WHICH MAY NOT BE USED.)

00235/960206-1534

KOPPERS INDUSTRIES

Koppers Industries, Inc.
P.O. Box 160
Tie Plant, MS 38960

Telephone: (601) 226-4584
FAX: (601) 226-4588

December 19, 2000

CERTIFIED MAIL

Environmental Compliance Division
Office of Pollution Control
P.O. Box 10385
Jackson, MS 39289-0385

Subject: Koppers Industries, Inc.
Grenada Plant – November 2000 POTW Permit DMR

Dear sir or madam:

Enclosed you will find a copy of the November 2000 Discharge Monitoring Report for Koppers Industries, Inc. located in Tie Plant, MS. No exceedences were detected for the month. If you have any questions, please call 601-226-4584 ext. 40

Enclosed is the Arsenic, Chromium, and Copper semi-annual report.

Sincerely,

Anthony A. Mayhan
Environmental and Safety Supervisor

Cc: Tim Basilone

KOPPERS INDUSTRIES

Koppers Industries, Inc.
P.O. Box 160
Tie Plant, MS 38960

Telephone (601) 226-4584
FAX (601) 226-4588

November 22, 2000

CERTIFIED MAIL

RECEIVED
NOV 30 2000
Miss. dept. of Environmental Quality
Office of Pollution Control

Environmental Compliance Division
Office of Pollution Control
P.O. Box 10385
Jackson, MS 39289-0385

Subject: Koppers Industries, Inc.
Grenada Plant – October 2000 POTW Permit DMR

Dear sir or madam:

Enclosed you will find a copy of the October 2000 Discharge Monitoring Report for Koppers Industries, Inc. located in Tie Plant, MS. No exceedences were detected for the month. If you have any questions, please call 601-226-4584 ext. 40

Sincerely,

Anthony A. Mayhan

Anthony A. Mayhan
Environmental and Safety Supervisor

Cc: Tim Basilone

KOPPERS INDUSTRIES

Koppers Industries, Inc
P.O. Box 160
Tie Plant, MS 38960

Telephone (601) 226-4584
FAX (601) 226-4588

October 13, 2000

CERTIFIED MAIL

Environmental Compliance Division
Office of Pollution Control
P.O. Box 10385
Jackson, MS 39289-0385

Subject: Koppers Industries, Inc.
Grenada Plant – September 2000 POTW Permit DMR

Dear sir or madam:

Enclosed you will find a copy of the September 2000 Discharge Monitoring Report for Koppers Industries, Inc. located in Tie Plant, MS. During September, the plant did not begin discharging any water to the city POTW until September 8, 2000. If you have any questions, please call 601-226-4584 ext. 40

Sincerely,

Anthony A. Mayhan

Anthony A. Mayhan
Environmental and Safety Supervisor

Cc: Tim Basilone

KOPPERS INDUSTRIES

Koppers Industries, Inc
P.O. Box 16
Tie Plant, MS 3896

Telephone (601) 226-458
FAX (601) 226-458

September 13, 2000

RECEIVED
SEP 18 2000
Dept. of Environmental Quality
Office of Pollution Control

CERTIFIED MAIL

Environmental Compliance Division
Office of Pollution Control
P.O. Box 10385
Jackson, MS 39289-0385

Subject: Koppers Industries, Inc.
Grenada Plant – August 2000 POTW Permit DMR

Dear sir or madam:

Enclosed you will find a copy of the August 2000 Discharge Monitoring Report for Koppers Industries, Inc. located in Tie Plant, MS. Pentachlorophenol exceeded permit parameters during the week of August 14. Maximum concentration for pentachlorophenol was 0.616 mg/L, and maximum loading for pentachlorophenol was 0.111 mg/L. Both exceeded permit limits. The system was shutdown on August 21, 2000. Koppers did not resume discharging until September 8, 2000.

Please see attached letters for agency notifications and reporting.

If you have any questions, please call 601-226-4584 ext. 40

Sincerely,

Anthony A. Mayhan

Anthony A. Mayhan
Environmental and Safety Supervisor

Cc: Tim Basilone

Pretreatment
MSP090300

Koppers Industries, Inc.
P.O. Box 160
Tie Plant, MS 38960

Telephone: (601) 226-4584
FAX: (601) 226-4588

RECEIVED
SEP 19 2000
Dept. of Environmental Quality
Office of Pollution Control

September 11, 2000

Melissa Collier
MS Department of Environmental Quality
Office of Pollution Control
P. O. Box 10385
Jackson, MS 39289-0385

RE: Discharge Compliance Report, Koppers Industries, Inc. – Grenada, Mississippi Facility, Permit No. MSP090300

Dear Ms. Collier,

This letter serves as notification that the Koppers Industries, Inc. (Koppers) facility in Grenada, Mississippi has resumed discharging treated process water to the City of Grenada Wastewater Treatment Plant. Notification was made by telephone on September 11, 2000 to you at the Mississippi Department of Environmental Quality (MSDEQ) and Mr. Clovis Tilghman of the City of Grenada Wastewater Treatment Plant that discharge activities would commence.

On the morning of August 21, 2000, Argus Analytical Laboratory (Argus) advised Koppers by telephone of analytical results for discharge monitoring samples collected on August 15, 2000. Argus indicated that the resulting concentration for pentachlorophenol was 0.616 mg/L. The permit limit for the daily maximum concentration of pentachlorophenol for the facility is 0.36 mg/L. After being advised of the results, discharge of water to the City of Grenada Wastewater Treatment Plant from the Koppers wastewater treatment facility was stopped. You and the City of Grenada Wastewater Treatment Plant were advised of this excursion and planned activities on August 22 by telephone and by letter on August 22.

Since August 21, process water was contained and re-circulated through the treatment system. Samples of the treated effluent from the wastewater treatment facility were collected periodically and sent for analysis at Argus Analytical. Based on the analytical results for samples collected from the system on September 6, which showed all parameters including pentachlorophenol among others were below applicable permitted discharge limits, a determination was made to resume discharging treated effluent water from the wastewater treatment facility. Analytical results from throughout this excursion are attached.

We believe the cause for this excursion is related to efficiency declines in our biological treatment system due to the sustained (high) ambient temperatures that occurred during this period. Monitoring will resume as required in the subject permit, and results will be submitted as required.

If you have any questions, please call me at 662-226-4584 ext. 40.

Sincerely,

Anthony A. Mayhan

Anthony A. Mayhan
Koppers Industries, Inc.

Attachments

Cc: Tim Basilone, Koppers
Clovis Tilghman, Grenada

To: Anthony Mayhan

Company: Koppers Company

Fax:

LocCode: KOP_01W

Date: 8/21/00

Call made on 8/21/00 11U

Anthony Mayhan 662/226-4584 x40

This data was Faxed to either report an EXCURSION or to provide preliminary data.

Note ---> This FAX was sent because the call was not completed.

Sample Description	Collected	Parameter	Result	Limit		Sample ID	Recorded
Facility Discharge Outfall 001	8/15/00	Pentachlorophenol	0.616	0.36	Allowed Max	AA93878	8/18/00

All reported data should be considered preliminary and subject to change depending on QA/QC verification.
In case of discrepancies, always refer to the final signed report.

Excursions last run on: 8/16/00 8:05:46 AM

ARGUS ANALYTICAL, INC. 601/957-2676 * FAX 601/957-1887

Number of pages (including this page): _____

ARGUS ANALYTICAL, INC.
235 Highpoint Drive
Ridgeland, Mississippi 39157
Telephone: 601/957-2676 FAX: 601/957-1887

No discharg

To: Koppers Company
1 Koppers Drive
Tie Plant, MS 38960

ATTN: Anthony Mayhan

Date Reported: 08/31/00

Date Sampled: 08/24/00
Time Sampled: 13:00
Sampled by: M. Harper

Project ID/Location: Facility Discharge
Weekly Requirements

Date Received: 08/25/00

Sample Description: Outfall 001 (1059-1061)

Project Number:

Sample Number: AA94325
Sample Matrix: WATER

Parameter	Result	Det Limit	Units	Method	Analysts	Date	Time
Biochemical Oxygen Demand	4.80	1.0	mg/L	405.1	MWS	08/25/00	11:15
Total Suspended Solids	360	4.0	mg/L	160.2	SMB	08/30/00	08:25
Phenolics, Total	0.05	0.05	mg/L	420.1	AMB	08/29/00	09:20
Oil & Grease	9.1	2.0	mg/L	1664	MEW	08/30/00	10:30
Pentachlorophenol	7.26	0.500	mg/L	625	RLT	08/28/00	14:23

ND = Not Detected

EPA 200.7/6010B was used by analysts BTH

argusndt

Quality Assurance/Quality Control

B. G. Giessner, Ph.D.

ARGUS ANALYTICAL, INC.
235 Highpoint Drive
Ridgeland, Mississippi 39157
Telephone: 601/957-2676 FAX: 601/957-1887

NO discharge

To: Koppers Company
1 Koppers Drive
Tie Plant, MS 38960

ATTN: Anthony Mayhan

Date Reported: 08/28/00

Date Received: 08/25/00

Project ID/Location: Special Testing

Project Number:

SAMPLE INFORMATION

Sample No.	Sample Description	Matrix	Date/Time Sampled		Sampled by
AA94350	1057 Bug Tank	WATER	08/24/00	13:00	M. Harper
AA94351	1058 Clarifier Agitator	WATER	08/24/00	13:00	M. Harper

ANALYTICAL RESULTS

Sample No.	Parameter	Result	Units	MDL	Method	Analysts	Date
AA94350	Pentachlorophenol	10.2	mg/L	0.700	625	RLT	08/28/00
AA94351	Pentachlorophenol	4.27	mg/L	0.530	625	RLT	08/28/00

ND = Not Detected

EPA 200.7/6010B was used by analysts BTH

1pmsr07

Quality Assurance/Quality Control

B. G. Giessner, Ph.D.

ARGUS ANALYTICAL, INC.
235 Highpoint Drive
Ridgeland, Mississippi 39157
Telephone: 601/957-2676 FAX: 601/957-1887

No discharge

To: Koppers Company
1 Koppers Drive
Tie Plant, MS 38960

ATTN: Anthony Mayhan

Date Reported: 09/01/00

Date Sampled: 08/31/00
Time Sampled: 09:00
Sampled by: M. Harper

Project ID/Location: Facility Discharge Weekly Requirements

Date Received: 09/01/00

Sample Description: Outfall 001

Project Number:

Sample Number: AA94608
Sample Matrix: WATER

Parameter	Result	Det Limit	Units	Method	Analysts	Date	Time
Pentachlorophenol	3.97	0.271	mg/L	625	RLT	09/01/00	13:52

ND = Not Detected

EPA 200.7/6010B was used by analysts BTH

argusndt

Quality Assurance/Quality Control

B. G. Giessner, Ph.D.

ARGUS ANALYTICAL, INC.
235 Highpoint Drive
Ridgeland, Mississippi 39157
Telephone: 601/957-2676 FAX: 601/957-1887

No discharge

To: Koppers Company
1 Koppers Drive
Tie Plant, MS 38960

ATTN: Anthony Mayhan

Date Reported: 09/05/00
Date Sampled: 08/29/00
Time Sampled: 12:00
Sampled by: W. Harper

Project ID/Location: Facility Discharge
Weekly Requirements

Date Received: 08/30/00

Sample Description: Outfall 001

Project Number:

Sample Number: AA94520
Sample Matrix: WATER

Parameter	Result	Det Limit	Units	Method	Analysts	Date	Time
Biochemical Oxygen Demand	16.1	1.0	mg/L	405.1	MWS	08/31/00	07:50
Total Suspended Solids	770	10	mg/L	160.2	SMB	08/30/00	14:40
Phenolics, Total	0.12	0.05	mg/L	420.1	AMB	08/30/00	09:10
Oil & Grease	5.1	2.1	mg/L	1664	MEW	08/31/00	08:30
Pentachlorophenol	1.23	0.530	mg/L	625	RLT	08/30/00	14:06

ND = Not Detected

EPA 200.7/6010B was used by analysts BTH

argusndt

Quality Assurance/Quality Control

B. G. Giessner, Ph.D.

No discharge

ARGUS ANALYTICAL, INC.
235 Highpoint Drive
Ridgeland, Mississippi 39157
Telephone: 601/957-2676 FAX: 601/957-1887

To: Koppers Company
1 Koppers Drive
Tie Plant, MS 38960

ATTN: Anthony Mayhan

Date Reported: 09/12/00
Date Sampled: 09/04/00
Time Sampled: 14:00
Sampled by: M. Harper

Project ID/Location: Facility Discharge
Weekly Requirements

Date Received: 09/06/00

Sample Description: Outfall 001

Project Number:

Sample Number: AA94697
Sample Matrix: WATER

Parameter	Result	Det Limit	Units	Method	Analysts	Date	Time
Biochemical Oxygen Demand	9.90	1.0	mg/L	405.1	MWS	09/06/00	13:45
Total Suspended Solids	370	2.0	mg/L	160.2	AMB	09/06/00	08:40
Phenolics, Total	ND	0.05	mg/L	420.1	AMB	09/07/00	15:30
Oil & Grease	29.7	6.7	mg/L	1664	MEW	09/06/00	15:30
Pentachlorophenol	0.158	0.005	mg/L	625	RLT	09/06/00	11:37

All OK

ND = Not Detected

EPA 200.7/6010B was used by analysts BTH

argusndt

Monika E. A. Wolly
Quality Assurance/Quality Control

B. G. Giessner, Ph.D.

NAME/ADDRESS (Include Facility Name/Location if Different)

NAME KOPPERS INDUSTRIES INC

ADDRESS P O BOX 189

TIE PLANT

FACILITY

LOCATION

ATTN: THOMAS L HENDERSON

NATIONAL POLLUTANT DISCHARGE ELIMINATION SYSTEM (NPDES) DISCHARGE MONITORING REPORT (DMR) (2-16)

NS0090300	001 A
PERMIT NUMBER	DISCHARGE NUMBER (17-19)

MONITORING PERIOD

	YEAR	MO	DAY		YEAR	MO	DAY
FROM	00	00	01	TO	00	00	31
	(20-21)	(22-23)	(24-25)		(26-27)	(28-29)	(30-31)

MINOR (SUBR NO)

F - FINAL

TOTAL FACILITY DISCHARGE

T-AT

Form Approved. OMB No. 2040-0004 Approval expires 05-31-98

*** NO DISCHARGE |__| ***

NOTE: Read Instructions before completing this form.

PARAMETER (32-37)		(3 Card Only) QUANTITY OR LOADING (46-53) AVERAGE	(54-61) MAXIMUM	UNITS	(4 Card Only) QUANTITY OR CONCENTRATION (38-45) MINIMUM	(46-53) AVERAGE	(54-61) MAXIMUM	UNITS	NO. EX (62-63)	FREQUENCY OF ANALYSIS (64-68)	SAMPLE TYPE (69-70)
00, 5-DAY (20 DEG. C) 00310 1 0 0 EFFLUENT GROSS VALUE	SAMPLE MEASUREMENT	0.494	1.412	(26)	******	4.14	7.80	(19)	0	1/7	C
	PERMIT REQUIREMENT	70 MO AVG	140 DAILY MX	LBS/DY	******	240 MO AVG	480 DAILY MX	MG/L		WEEKLY	COMPOSITE
PH 00400 1 0 0 EFFLUENT GROSS VALUE	SAMPLE MEASUREMENT	******	******		7.10	******	7.97	(12)	0	2/7	G
	PERMIT REQUIREMENT	******	******	**** ****	5.5 MINIMUM	******	9.5 MAXIMUM	SU		2 TIMES/WEEK	GRAB
SOLIDS, TOTAL SUSPENDED 00530 1 0 0 EFFLUENT GROSS VALUE	SAMPLE MEASUREMENT	8.754 55 am	37.824 209 am	(26)	******	55	209	(19)	0	1/7	C
	PERMIT REQUIREMENT	88 MO AVG	175 DAILY MX	LBS/DY	******	300 MO AVG	600 DAILY MX	MG/L		WEEKLY	COMPOSITE
OIL & GREASE (FREON EXTR.-IR METHOD) TOT, R 00560 1 0 0 EFFLUENT GROSS VALUE	SAMPLE MEASUREMENT	0	0	(01)	******	0	0	(19)	0	1/7	G
	PERMIT REQUIREMENT	REPORT MO AVG	29.2 DAILY MX	KG/DAY	******	REPORT MO AVG	100 DAILY MX	MG/L		WEEKLY	GRAB
PENTACHLOROPHENOL 39032 1 0 0 EFFLUENT GROSS VALUE	SAMPLE MEASUREMENT	0.0223	0.1114 *	(01)	******	0.123	0.616 *	(19)	2	1/7	G
	PERMIT REQUIREMENT	.053 MO AVG	.102 DAILY MX	KG/DAY	******	.18 MO AVG	.36 DAILY MX	MG/L		WEEKLY	GRAB
PHENOLS 32730 1 0 0 EFFLUENT GROSS VALUE	SAMPLE MEASUREMENT	0	0	(01)	******	0	0	(19)	0	1/7	G
	PERMIT REQUIREMENT	.88 MO AVG	1.75 DAILY MX	KG/DAY	******	3 MO AVG	6 DAILY MX	MG/L		WEEKLY	GRAB
FLOW, IN CONDUIT OR THRU TREATMENT PLANT 50050 1 0 0 EFFLUENT GROSS VALUE	SAMPLE MEASUREMENT	0.01827	0.0311	(03)	******	******	******			Daily	Contin
	PERMIT REQUIREMENT	REPORT MO AVG	0.035 DAILY MX	MGD	******	******	******	**** ****		DAILY	CONTIN

NAME/TITLE PRINCIPAL EXECUTIVE OFFICER

Thomas L. Henderson / Plant Manager

TYPED OR PRINTED

I CERTIFY UNDER PENALTY OF LAW THAT I HAVE PERSONALLY EXAMINED AND AM FAMILIAR WITH THE INFORMATION SUBMITTED HEREIN; AND BASED ON MY INQUIRY OF THOSE INDIVIDUALS IMMEDIATELY RESPONSIBLE FOR OBTAINING THE INFORMATION, I BELIEVE THE SUBMITTED INFORMATION IS TRUE, ACCURATE AND COMPLETE. I AM AWARE THAT THERE ARE SIGNIFICANT PENALTIES FOR SUBMITTING FALSE INFORMATION, INCLUDING THE POSSIBILITY OF FINE AND IMPRISONMENT. SEE 18 U.S.C. § 1001 AND 33 U.S.C. § 1319. (Penalties under these statutes may include fines up to $10,000 and or maximum imprisonment of between 6 months and 5 years.)

Thomas L. Henderson

SIGNATURE OF PRINCIPAL EXECUTIVE OFFICER OR AUTHORIZED AGENT

TELEPHONE		DATE		
AREA CODE	NUMBER	YEAR	MO	DAY
662	226-4584	00	9	13

COMMENTS AND EXPLANATION OF ANY VIOLATIONS (Reference all attachments here)

* See attachments for explanation

Form 3320-1 (08-95) Previous editions may not be used. (REPLACES EPA FORM T-40 WHICH MAY NOT BE USED.)

KOPPERS INDUSTRIES

Koppers Industries, Inc.
P.O. Box 160
Tie Plant, MS 38960

Telephone: (601) 226-4584
FAX: (601) 226-4588

September 11, 2000

Melissa Collier
MS Department of Environmental Quality
Office of Pollution Control
P. O. Box 10385
Jackson, MS 39289-0385

RE: Discharge Compliance Report, Koppers Industries, Inc. – Grenada, Mississippi Facility, Permit No. MSP090300

Dear Ms. Collier,

This letter serves as notification that the Koppers Industries, Inc. (Koppers) facility in Grenada, Mississippi has resumed discharging treated process water to the City of Grenada Wastewater Treatment Plant. Notification was made by telephone on September 11, 2000 to you at the Mississippi Department of Environmental Quality (MSDEQ) and Mr. Clovis Tilghman of the City of Grenada Wastewater Treatment Plant that discharge activities would commence.

On the morning of August 21, 2000, Argus Analytical Laboratory (Argus) advised Koppers by telephone of analytical results for discharge monitoring samples collected on August 15, 2000. Argus indicated that the resulting concentration for pentachlorophenol was 0.616 mg/L. The permit limit for the daily maximum concentration of pentachlorophenol for the facility is 0.36 mg/L. After being advised of the results, discharge of water to the City of Grenada Wastewater Treatment Plant from the Koppers wastewater treatment facility was stopped. You and the City of Grenada Wastewater Treatment Plant were advised of this excursion and planned activities on August 22 by telephone and by letter on August 22.

Since August 21, process water was contained and re-circulated through the treatment system. Samples of the treated effluent from the wastewater treatment facility were collected periodically and sent for analysis at Argus Analytical. Based on the analytical results for samples collected from the system on September 6, which showed all parameters including pentachlorophenol among others were below applicable permitted discharge limits, a determination was made to resume discharging treated effluent water from the wastewater treatment facility. Analytical results from throughout this excursion are attached.

We believe the cause for this excursion is related to efficiency declines in our biological treatment system due to the sustained (high) ambient temperatures that occurred during this period. Monitoring will resume as required in the subject permit, and results will be submitted as required.

If you have any questions, please call me at 662-226-4584 ext. 40.

Sincerely,

Anthony A. Mayhan

Anthony A. Mayhan
Koppers Industries, Inc.

Attachments

Cc: Tim Basilone, Koppers
Clovis Tilghman, Grenada

KOPPERS INDUSTRIES

Koppers Industries, Inc.
P.O. Box 160
Tie Plant, MS 38960

Telephone: (601) 226-4584
FAX: (601) 226-4588

August 22, 2000

Melissa Collier
MS Department of Environmental Quality
Office of Pollution Control
P. O. Box 10385
Jackson, MS 39289-0385

RE: Discharge Noncompliance Report, Koppers Industries, Inc. – Grenada, Mississippi Facility, Permit No. MSP090300

Dear Ms. Collier,

This letter serves as notification of a discharge exceedence that occurred at the Koppers Industries, Inc. (Koppers) facility in Grenada, Mississippi. In compliance with the referenced Permit, oral notification within 24 hours was made by telephone on August 22, 2000 to you at 8:05 am at the Mississippi Department of Environmental Quality (MSDEQ) and Mr. Clovis Tilghman at 8:10 am of the City of Grenada Wastewater Treatment Plant.

On the morning of August 21, 2000, Argus Analytical Laboratory (Argus) advised Koppers by telephone of analytical results for discharge monitoring samples collected on August 15, 2000. Argus indicated that the resulting concentration for pentachlorophenol was 0.616 mg/L. The permit limit for the daily maximum concentration of pentachlorophenol for the facility is 0.36 mg/L.

After being advised of the results, discharge of water to the City of Grenada Wastewater Treatment Plant from the Koppers wastewater treatment facility was stopped. At that time, a sample of the treated effluent from the wastewater treatment facility was collected and sent via express mail to Argus Analytical. Based on the results of the sample a determination will be made either to resume discharging effluent water from the wastewater treatment facility or, if necessary, further investigate the problem. Analytical results will be forwarded to you and the City of Grenada Wastewater Treatment Plant prior to resuming discharge activities.

If you have any questions, please call me at 662-226-4584 ext. 40.

Sincerely,

Anthony A. Mayhan

Anthony A. Mayhan
Koppers Industries, Inc.

Cc: Tim Basilone, Koppers
Clovis Tilghman, Grenada

MSP090300

Grenada Coun
Pretreatment
mc

KOPPERS INDUSTRIES

Koppers Industries, Inc.
P.O. Box 160
Tie Plant, MS 38960

Telephone: (601) 226-4584
FAX: (601) 226-4588

RECEIVED
AUG 24 2000
Dept. of Environmental Quality
Office of Pollution Control

FILE COPY

August 22, 2000

Melissa Collier
MS Department of Environmental Quality
Office of Pollution Control
P. O. Box 10385
Jackson, MS 39289-0385

RE: Discharge Noncompliance Report, Koppers Industries, Inc. – Grenada, Mississippi Facility, Permit No. MSP090300

Dear Ms. Collier,

This letter serves as notification of a discharge exceedence that occurred at the Koppers Industries, Inc. (Koppers) facility in Grenada, Mississippi. In compliance with the referenced Permit, oral notification within 24 hours was made by telephone on August 22, 2000 to you at 8:05 am at the Mississippi Department of Environmental Quality (MSDEQ) and Mr. Clovis Tilghman at 8:10 am of the City of Grenada Wastewater Treatment Plant.

On the morning of August 21, 2000, Argus Analytical Laboratory (Argus) advised Koppers by telephone of analytical results for discharge monitoring samples collected on August 15, 2000. Argus indicated that the resulting concentration for pentachlorophenol was 0.616 mg/L. The permit limit for the daily maximum concentration of pentachlorophenol for the facility is 0.36 mg/L.

After being advised of the results, discharge of water to the City of Grenada Wastewater Treatment Plant from the Koppers wastewater treatment facility was stopped. At that time, a sample of the treated effluent from the wastewater treatment facility was collected and sent via express mail to Argus Analytical. Based on the results of the sample a determination will be made either to resume discharging effluent water from the wastewater treatment facility or, if necessary, further investigate the problem. Analytical results will be forwarded to you and the City of Grenada Wastewater Treatment Plant prior to resuming discharge activities.

If you have any questions, please call me at 662-226-4584 ext. 40.

Sincerely,

Anthony A. Mayhan

Anthony A. Mayhan
Koppers Industries, Inc.

Cc: Tim Basilone, Koppers
Clovis Tilghman, Grenada

KOPPERS INDUSTRIES

Koppers Industries, Inc.
P.O. Box 160
Tie Plant, MS 38960

Telephone: (601) 226-4584
FAX: (601) 226-4588

August 16, 2000

CERTIFIED MAIL

Environmental Compliance Division
Office of Pollution Control
P.O. Box 10385
Jackson, MS 39289-0385

Subject: Koppers Industries, Inc.
Grenada Plant – July 2000 POTW Permit DMR

Dear sir or madam:

Enclosed you will find a copy of the July 2000 Discharge Monitoring Report for Koppers Industries, Inc. located in Tie Plant, MS. There were no exceedances during the reporting period.

If you have any questions please call 601-226-4584 ext. 40

Sincerely,

Anthony A. Mayhan

Anthony A. Mayhan
Environmental and Safety Supervisor

Cc: Tim Basilone

Grenada County
Stormwater Pretreatment
MSP090300

KOPPERS INDUSTRIES

Koppers Industries, Inc.
P.O. Box 160
Tie Plant, MS 38960

Telephone: (601) 226-4584
FAX: (601) 226-4588

July 27, 2000

RECEIVED
AUG - 1 2000
Dept. of Environmental Quality
Office of Pollution Control

FILE COPY

CERTIFIED MAIL

Melissa Collier
MS Dept. of Environmental Quality
Office of Pollution Control
P. O. Box 10385
Jackson, MS 39289-0385

Dear Ms.Collier:

Koppers Industries, Inc., Tie Plant, MS – SPCC, Contingency, and Pollution Prevention Plan

Enclosed is Koppers Industries SPCC, Contingency, and Pollution Prevention Plan. The plan is being submitted in accordance with the Clean Water Act - 40 CFR Part 112.5. The plan has to be recertified by a qualified engineer triennially. Koppers Industries had Willis Engineering in Grenada, MS certify our plan.

If you have any questions, please call me at 662-226-4584 ext. 40.

Sincerely,

Anthony A. Mayhan

Anthony A. Mayhan
Safety, Health, and Environmental Supervisor

Cc: Narindar Aumar – USEPA Region IV

FILE COPY

STATE OF MISSISSIPPI
DAVID RONALD MUSGROVE, GOVERNOR
MISSISSIPPI DEPARTMENT OF ENVIRONMENTAL QUALITY
CHARLES H. CHISOLM, EXECUTIVE DIRECTOR

July 19, 2000

Mr. Thomas Henderson, Plant Manager
Koppers Industries, Inc., Tie Plant
PO Box 160
Tie Plant, MS 38960-

Dear Sir/Madam:

Re: Koppers Industries Inc
Tie Plant, Grenada County, MS
Water PRE-TREATMENT Ref. No. - MSP090300

This letter is to acknowledge receipt of your application on July 17, 2000, for the above referenced permit. Within forty-five days after the date of receipt of the request, you will be notified either the submitted information is complete or of the major components required to complete the processing of your request.

If this action involves construction activities, please notify us of your projected schedule for commencement of construction and completion of construction if this information is not already contained in the submitted information.

Should you have any questions, please contact Maya Rao at (601) 961-5171.

Sincerely,

Teresa Dennington
Environmental Permits

OFFICE OF POLLUTION CONTROL
POST OFFICE BOX 10385 • JACKSON, MISSISSIPPI 39289-0385 • TEL: (601) 961-5171 • FAX: (601) 354-6612 • www.deq.state.ms.us
AN EQUAL OPPORTUNITY EMPLOYER

KOPPERS INDUSTRIES

Koppers Industries, Inc.
P.O. Box 160
Tie Plant, MS 38960

Telephone: (601) 226-4584
FAX: (601) 226-4588

July 10, 2000

CERTIFIED MAIL: Z 490 517 038

RECEIVED
JUL 17 2000
Miss. st Environmental Quality
Office of Pollution Control

Steve Spangler
MSDEQ
Timber and Wood Products
2380 HWY 80 West
Jackson, MS 39204

Dear Steve,

Permit #: MSP090300

Please find enclosed our permit renewal application. We hope for prompt consideration in our renewal request.

If you have any questions about the enclosed information, please contact me at 662-226-4584 ext. 40.

Sincerely,

Anthony A. Mayhan
Environmental and Safety Supervisor

Cc: Tim Basilone - Koppers Industries, Inc.

RECEIVED
JUL 17 2000
DEQ-EPD

FORM 2-P

For Agency Use
Application Number MS0090300
Date Received

STATE OF MISSISSIPPI
OFFICE OF POLLUTION CONTROL
P. O. BOX 10385
JACKSON, MISSISSIPPI 39289-0385

APPLICATION FOR A STATE OPERATING PRETREATMENT PERMIT

(Please print or type)

1. Name of Applicant:	Koppers Industries, Inc.				
2. Mailing Address of Applicant:					
Number & Street (P. O. Box):	1 Kopper Drive				
City:	Tie Plant	State:	MS	Zip:	38960
Telephone Number:	(662) 226-4584				
3. Applicant's Authorized Agent:					
Name and Title:	Thomas L. Henderson -- Plant Manager				
Number & Street (P. O. Box):	1 Kopper Drive				
City:	Tie Plant	State:	MS	Zip:	38960
Telephone Number:	(662) 226-4584				
4. Facilities Location:					
Number & Street (P. O. Box):	1 Kopper Drive				
City:	Tie Plant	County:	Grenada		
Latitude (Deg., Min., Sec.):	North 33° - 44.123'				
Longitude (Deg., Min., Sec.):	West 89° - 47.025'				

12. Facility Water Use:	
Estimate average volume in thousand gallons per day for the following types of water usage at this facility	
Noncontact Cooling:	360,000
Boiler Feed:	10,000
Process (Including Contact Cooling):	-0-
Sanitary:	400 - 500
Other:	-0-
Total:	370,500

13. List all Facility Discharges:
Other water losses (surface water, product consumption, evaporation). Indicate volume in thousand gallons.
Process, sanitary, boiler blowdown, contaminated stormwater to POTW.
Stormwater runoff to surface discharge. Cooling water evaporation,
septic tank.

14. Give narrative description of process(es) producing discharge, or in case of no discharge, that generates wastewater.
This process is a wood perserving operation which uses creosotes pentachloro-
phenol in oil generates process wastewater. Stormwater collected on process
areas becomes wastewater, additionally, sanitary wastewater from offices and
service buildings are discharged to septic tanks.

15. List raw materials used:
Southern pine and mixed hardwoods.

17. Effluent Characteristics:

A. You must provide the results of at least one analysis for every pollutant in this table. Complete one table for each outfall to the city sewer. If your facility does not have a discharge indicate so and disregard.

1. POLLUTANT	2. EFFLUENT							3. UNITS (specify if blank)		4. INTAKE (optional)		
	a. MAXIMUM DAILY VALUE		b. MAXIMUM 30 DAY VALUE (if available)		c. LONG TERM AVRG. VALUE (if available)		d. NO. OF ANALYSES			a. LONG TERM AVERAGE VALUE		b. NO. OF ANALYSES
	(1) CONCENTRATION	(2) MASS	(1) CONCENTRATION	(2) MASS	(1) CONCENTRATION	(2) MASS		a. CONCENTRATION	b. MASS	(1) CONCENTRATION	(2) MASS	
a. Biochemical Oxygen Demand (BOD)	20 mg/1		240 mg/1		30 mg/1			NA	NA	NA	NA	NA
b. Chemical Oxygen Demand (COD)	75 mg/1		100 mg/1		75 mg/1			NA	NA	NA	NA	NA
c. Total Suspended Solids (TSS)	100 mg/1		250 mg/1		100 mg/1			NA	NA	NA	NA	NA
d. Ammonia (as N)	0.0 mg/1		00 mg/1		00 mg/1			NA	NA	NA	NA	NA
e. Flow	VALUE 370,000		VALUE		VALUE					VALUE		
f. Temperature (winter)	VALUE 10°		VALUE		VALUE			°C		VALUE		
g. Temperature (Summer)	VALUE 98°		VALUE		VALUE			°C		VALUE		
h. pH	MIN 8.2	MAX 9.5	MIN 5.5	MAX 9.5				STANDARD UNITS				

1. POLLUTANT AND CAS NO. (if available)	2. MARK "X"		3. EFFLUENT							4. UNITS		5. INTAKE (OPTIONAL)		
	A. BELIEVED PRESENT	B. BELIEVED ABSENT	A. MAXIMUM DAILY VALUE		b. MAXIMUM 30 DAY VALUE (if available)		c. LONG TERM AVERAGE VALUE (if available)		d. NO. OF ANALYSIS	a. CONCENTRATION	b. MASS	a. LONG TERM AVERAGE VALUE		b. NO. OF ANALYSIS
			(1) CONC.	(2) MASS	(1) CONC.	(2) MASS	(1) CONC.	(2) MASS				(1) CONC.	(2) MASS	
e. Nitrogen, Total Organic (as N)		X												
f. Oil and Grease	X		5 mg/l		100 mg/l		5 mg/l							
g. Phosphorus (as P), Total (7723-14-0)		X												
h. Radioactivity														
1. Alpha, Total		X												
2. Beta, Total		X												
3. Radium Total		X												
4. Radium 226, Total		X												
i. Sulfate (as SO_4) (14808-79-8)		X												

1. POLLUTANT AND CAS NO. (if available)	2. MARK "X"		3. EFFLUENT							4. UNITS		5. INTAKE (optional)		
	A. BELIEVED PRESENT	B. BELIEVED ABSENT	A. MAXIMUM DAILY VALUE		B. MAXIMUM 30 DAY VALUE (if available)		C. LONG TERM AVERAGE VALUE (if available)		D. NO. OF ANALYSIS	a. CONCENTRATION	b. MASS	a. LONG TERM AVERAGE VALUE		D. NO. OF ANALYSIS
			(1) CONC.	(2) MASS	(1) CONC.	(2) MASS	(1) CONC.	(2) MASS				(1) CONC.	(2) MASS	
t. Magnesium Total (7439-95-4)		X												
s. Molybdenum Total (7439-98-7)		X												
t. Manganese Total (7439-96-5)		X												
u. Tin, Total (7440-31-5)		X												
v. Titanium Total (7440-32-6)		X												

1. POLLUTANT AND CAS NO. (if available)	2. MARK "X"			3. EFFLUENT							4. UNITS		5. INTAKE (OPTIONAL)		
	A. TESTING REQUIRED	B. BELIEVED PRESENT	C. BELIEVED ABSENT	A. MAXIMUM DAILY VALUE		b. MAXIMUM 30 DAY VALUE (if available)		c. LONG TERM AVERAGE VALUE (if available)		d. NO. OF ANALYSIS	a. CONCENTRATION	b. MASS	a. LONG TERM AVERAGE VALUE		b. NO. OF ANALYSIS
				(1) CONC.	(2) MASS	(1) CONC.	(2) MASS	(1) CONC.	(2) MASS				(1) CONC.	(2) MASS	
4M. Cadmium, Total (7440-43-9)			X												
5M. Chromium, Total (7440-47-3)			X												
6M. Copper, Total (7440-50-8)			X												
7M. Lead, Total (7439-92-1)			X												
8M. Mercury, Total (7439-97-6)			X												
9M. Nickel, Total (7440-02-0)			X												
10M. Selenium, Total (7782-49-2)			X												

1. POLLUTANT AND CAS NO. (if available)	2. MARK "X"			3. EFFLUENT							4. UNITS		5. [illegible]		
	A. TESTING REQUIRED	B. BELIEVED PRESENT	C. BELIEVED ABSENT	A. MAXIMUM DAILY VALUE		b. MAXIMUM 30 DAY VALUE (if available)		c. LONG TERM AVERAGE VALUE (if available)		d. NO. OF ANALYSIS	a. CONCENTRATION	b. MASS	a. LONG TERM AVERAGE VALUE		b. NO. OF ANALYSES
				(1) CONC.	(2) MASS	(1) CONC.	(2) MASS	(1) CONC.	(2) MASS				(1) CONC.	(2) MASS	
GC/MS FRACTION - VOLATILE COMPOUNDS															
1V. Acrolein (107-02-8)			X												
2V. Acrylonitrile (107-13-1)			X												
3V. Benzene (71-43-2)		X													
4V. Bis (Chloromethyl) Ether (542-88-1)			X								0.0				
5V. Bromoform (75-25-2)			X												
6V. Carbon Tetrachloride (56-23-5)			X												
7V. Chlorobenzene (108-90-7)			X												

1. POLLUTANT AND CAS NO. (if available)	2. MARK "X"			3. EFFLUENT							4. UNITS		5. INTAKE (optional)		
	A. TESTING REQUIRED	B. BELIEVED PRESENT	C. BELIEVED ABSENT	A. MAXIMUM DAILY VALUE		b. MAXIMUM 30 DAY VALUE (if available)		c. LONG TERM AVERAGE VALUE (if available)		d. NO. OF ANALYSIS	a. CONCENTRATION	b. MASS	a. LONG TERM AVERAGE VALUE		b. NO. OF ANALYSIS
				(1) CONC.	(2) MASS	(1) CONC.	(2) MASS	(1) CONC.	(2) MASS				(1) CONC.	(2) MASS	
15V. 1,2-Dichloroethane (107-06-2)			X												
16V. 1,1-Dichloroethylene (75-35-4)			X												
17V. 1,2-Dichloropropane (78-87-5)			X												
18V. 1,3-Dichloropropylene (542-75-6)			X												
19V. Ethylbenzene (100-41-4)			X												
20V. Methyl Bromide (74-83-9)			X												
21V. Methyl Chloride (74-87-3)			X												

1. POLLUTANT AND CAS NO. (if available)	2. MARK "X"			3. EFFLUENT							4. UNITS		5. INTAKE (optional)		
	A. TESTING REQUIRED	B. BELIEVED PRESENT	C. BELIEVED ABSENT	a. MAXIMUM DAILY VALUE		b. MAXIMUM 30 DAY VALUE (if available)		c. LONG TERM AVERAGE VALUE (if available)		d. NO. OF ANALYSIS	a. CONCENTRATION	b. MASS	a. LONG TERM AVERAGE VALUE		b. NO. OF ANALYSIS
				(1) CONC.	(2) MASS	(1) CONC.	(2) MASS	(1) CONC.	(2) MASS				(1) CONC.	(2) MASS	
27V. 1,1,1-Trichloroethane (71-55-6)			X												
28V. 1,1,2-Trichloroethane (79-00-5)			X												
29V. Trichloroethylene (79-01-6)			X												
30V. Trichlorofluoromethane (75-69-4)			X												
31V. Vinyl Chloride (75-01-4)			X												
GC/MS FRACTION - ACID COMPOUNDS															
1A. 2-Chlorophenol (95-57-8)			X												
2A. 2,4-Dichlorophenol (120-83-2)			X												

1. POLLUTANT AND CAS NO. (if available)	2. MARK "X"			3. EFFLUENT							4. UNITS		5. INTAKE (optional)		
	A. TESTING REQUIRED	B. BELIEVED PRESENT	C. BELIEVED ABSENT	A. MAXIMUM DAILY VALUE		b. MAXIMUM 30 DAY VALUE (if available)		d. LONG TERM AVERAGE VALUE (if available)		d. NO. OF ANALYSIS	a. CONCENTRATION	b. MASS	a. LONG TERM AVERAGE VALUE		b. NO. OF ANALYSIS
				(1) CONC.	(2) MASS	(1) CONC.	(2) MASS	(1) CONC.	(2) MASS				(1) CONC.	(2) MASS	
10A. Phenol (108-95-2)		X									0.0				
11A. 2,4,6-Trichloro phenol (88-06-2)			X												
GC/MS FRACTION - BASE/NEUTRAL COMPOUNDS															
1B. Acenaphthene (83-32-9)		X									0.0				
2B. Acenaphtylene (208-96-8)			X												
3B. Anthracene (120-12-7)			X												
4B. Benzidine (92-87-5)			X												
5B. Benzo (a) Anthracene (56-55-3)			X												

1. POLLUTANT AND CAS NO. (if available)	2. MARK "X"			3. EFFLUENT							4. UNITS		5. INTAKE (OPTIONAL)		
	A. TESTING REQUIRED	B. BELIEVED PRESENT	C. BELIEVED ABSENT	A. MAXIMUM DAILY VALUE		b. MAXIMUM 30 DAY VALUE (if available)		c. LONG TERM AVERAGE VALUE (if available)		d. NO. OF ANALYSIS	a. CONCENTRATION	b. MASS	a. LONG TERM AVERAGE VALUE		b. NO. OF ANALYSIS
				(1) CONC.	(2) MASS	(1) CONC.	(2) MASS	(1) CONC.	(2) MASS				(1) CONC.	(2) MASS	
12B. Bis(2-Chloroisopropyl) Ether (102-60-1)			X												
13B. Bis(2-Ethylhexyl) Phthalate (117-81-7)			X												
14B. 4-Bromophenyl Phenyl Ether (101-55-3)			X												
15B. Butyl Benzyl Phthalate (85-68-7)			X												
16B. 2-Chloronaphthalene (91-58-7)			X												
17B. 4-Chlorophenyl Phenyl Ether (7005-72-3)			X												

1. POLLUTANT AND CAS NO. (if available)	2. MARK "X"			3. EFFLUENT							4. UNITS		5. INTAKE (optional)		
	A. TESTING REQUIRED	B. BELIEVED PRESENT	C. BELIEVED ABSENT	A. MAXIMUM DAILY VALUE		b. MAXIMUM 30 DAY VALUE (if available)		c. LONG TERM AVERAGE VALUE (if available)		d. NO. OF ANALYSIS	a. CONCENTRATION	b. MASS	a. LONG TERM AVERAGE VALUE		b. NO. OF ANALYSIS
				(1) CONC.	(2) MASS	(1) CONC.	(2) MASS	(1) CONC.	(2) MASS				(1) CONC.	(2) MASS	
24B. Diethyl Phthalate (84-66-2)			X												
25B. Dimethyl Phthalate (131-11-3)			X												
26B. Di-N-Butyl Phthalate (84-74-2)			X												
27B. 2,4-Dinitrotoluene (121-14-2)			X												
28B. 2,6-Dinitrotoluene (606-20-2)			X												
29B. Di-N-Octyl Phthalate (117-84-0)			X												
30B. 1,2-Diphenylhydrazine (as Azobenzene) (122-66-7)			X												

1. POLLUTANT AND CAS NO. (if available)	2. MARK "X"			3. EFFLUENT							4. UNITS		5. INTAKE (optional)		
	A. TESTING REQUIRED	B. BELIEVED PRESENT	C. BELIEVED ABSENT	A. MAXIMUM DAILY VALUE		b. MAXIMUM 30 DAY VALUE (if available)		c. LONG TERM AVERAGE VALUE (if available)		d. NO. OF ANALYSIS	a. CONCENTRATION	b. MASS	A. LONG TERM AVERAGE VALUE		b. NO. OF ANALYSES
				(1) CONC.	(2) MASS	(1) CONC.	(2) MASS	(1) CONC.	(2) MASS				(1) CONC.	(2) MASS	
38B. Isophorone (78-59-1)			X												
39B. Naphthalene (91-20-3)		X		0		0		0							
40B. Nitrobenzene (98-95-3)			X												
41B. N-Nitrosodimethylamine (62-75-9)			X												
42B. N-Nitrosodi N-Propylamine (621-64-7)			X												
GC/MS FRACTION - BASE/NEUTRAL COMPOUNDS (continued)															
43B. N-Nitrosodiphenylamine (86-30-6)			X												
44B. Phenanthrene (85-01-8)			X												

1. POLLUTANT AND CAS NO. (if available)	2. MARK "X"			3. EFFLUENT							4. UNITS		5. INTAKE (optional)		
	A. TESTING REQUIRED	B. BELIEVED PRESENT	C. BELIEVED ABSENT	A. MAXIMUM DAILY VALUE		b. MAXIMUM 30 DAY VALUE (if available)		d. LONG TERM AVERAGE VALUE (if available)		d. NO. OF ANALYSIS	a. CONCENTRATION	b. MASS	a. LONG TERM AVERAGE VALUE		b. NO. OF ANALYSIS
				(1) CONC.	(2) MASS	(1) CONC.	(2) MASS	(1) CONC.	(2) MASS				(1) CONC.	(2) MASS	
8P. 4,4'-DDE (72-55-9)			X												
9P. 4,4'-DDD (72-54-8)			X												
10P. Dieldrin (60-57-1)			X												
11P. α-Endosulfan (115-29-7)			X												
12P. β-Endosulfan (115-29-7)			X												
13P. Endosulfan Sulfate (1031-07-8)			X												
14P. Endrin (72-20-8)			X												
15P. Endrin Aldehyde (7421-93-4)			X												

1. POLLUTANT AND CAS NO. (if available)	2. MARK "X"			3. EFFLUENT							4. UNITS		5. INTAKE (OPTIONAL)		
	A. TESTING REQUIRED	B. BELIEVED PRESENT	C. BELIEVED ABSENT	a. MAXIMUM DAILY VALUE		b. MAXIMUM 30 DAY VALUE (if available)		d. LONG TERM AVERAGE VALUE (if available)		d. NO. OF ANALYSIS	a. CONCENTRATION	b. MASS	a. LONG TERM AVERAGE VALUE		b. NO. OF ANALYSIS
				(1) CONC.	(2) MASS	(1) CONC.	(2) MASS	(1) CONC.	(2) MASS				(1) CONC.	(2) MASS	
GC/MS FRACTION PESTICIDES (continued)															
22P. PCB-1248 (12672-29-6)			X												
23P. PCB-1260 (11096-82-5)			X												
24P. PCB-1016 (12674-11-2)			X												
25P. Toxaphene (8001-35-2)			X												

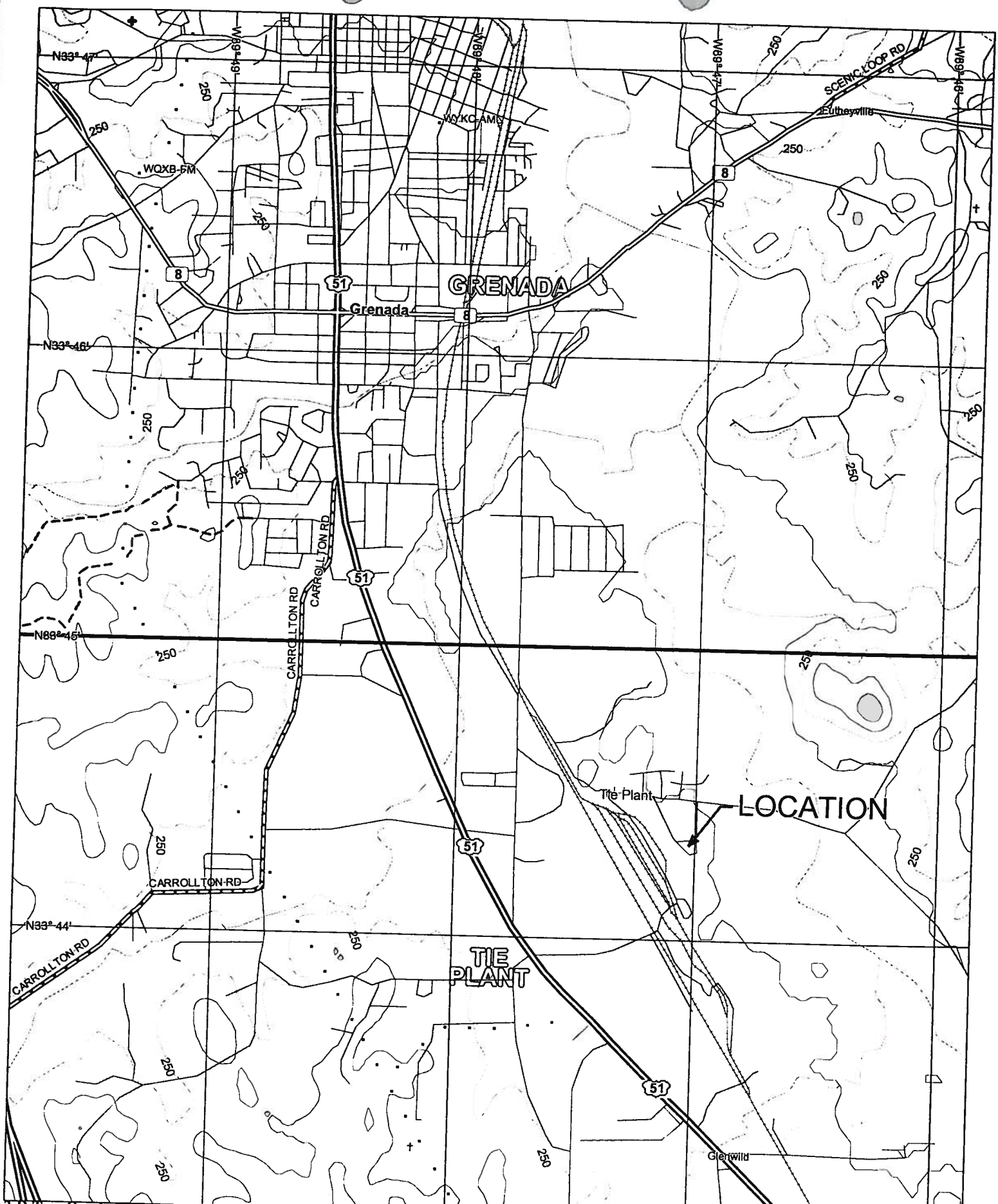

3-D TopoQuads Copyright © 1999 DeLorme Yarmouth, ME 04096

1000 ft Scale: 1 : 31,250 Detail: 12-3 Datum: NAD27

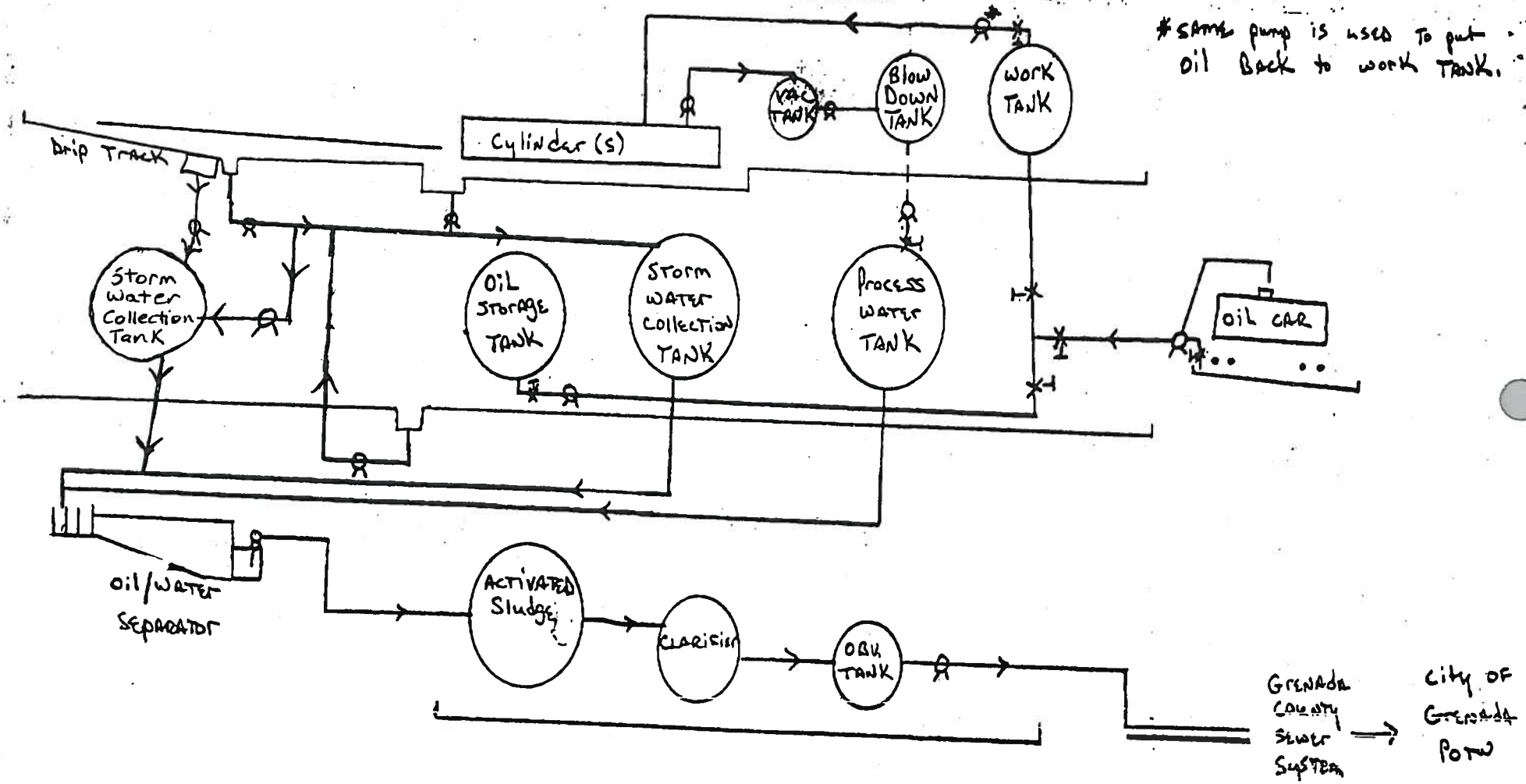

= valves

= pumps

Koppers Industries, Inc
P.O. Box 160
Tie Plant, Ms 38960
Located South of
Grenada, Ms

TESTING REQUIREMENTS FOR ORGANIC TOXIC POLLUTANTS INDUSTRY CATEGORY

INDUSTRY CATEGORY	GC/MS FRACTION Volatile	Acid	Base/Neutral	Pesticide
Adhesives and sealants	X	X	X	-
Aluminum forming	X	X	X	-
Auto and other laundries	X	X	X	X
Battery manufacturing	X	-	X	-
Coal mining	-	-	-	-
Coil coating	X	X	X	-
Copper forming	X	X	X	-
Electric and electronic compounds	X	X	X	X
Electroplating	X	X	X	-
Explosives manufacturing	-	X	X	-
Foundries	X	X	X	-
Gum and wood chemicals				
Tall oil rosin (subpart D)	X	X	X	-
Rosin based derivatives subpart F)	X	X	X	-
All other subparts	X	X	-	-
Inorganic chemicals manufacturing	X	X	X	-
Iron and steel manufacturing	X	X	X	-
Leather tanning and finishing	X	X	X	-
Mechanical products manufacturing	X	X	X	-
Nonferrous metals manufacturing	X	X	X	X
Ore mining (applies to the base and precious metals/subpart B)	-	X	-	-
Organic chemicals manufacturing	X	X	X	X
Paint and ink formulation	X	X	X	-
Pesticides	X	X	X	X
Petroleum refining	X	-	-	-
Pharmaceutical preparations	X	X	X	-
Photographic equipment and supplies	X	X	X	-
Plastic and synthetic materials mfg.	X	X	X	X
Plastic processing	X	-	-	-
Porcelain enameling	-	-	-	X
Printing and publishing	X	X	X	X
Pulp and paperboard mills				
Unbleached Kraft (subpart A)	2	X	2	2
Semi-chemical (subpart B)	2	X	2	2
(subpart C)	2	X	2	2
Unbleached Kraft-neutral sulfite semi-chemical (cross recovery) (subpart D)	2	X	2	2
Paperboard from wastepaper (subpart E)	X	X	2	X
Dissolving Kraft (subpart F)	X	X	2	2
Market bleached Kraft (subpart G)	X	X	2	2
BCT bleached Kraft (subpart H)	X	X	2	2
Fine bleached Kraft (subpart I)	X	X	2	2
Papergrade sulfite (subpart J)	X	X	X	2
Dissolving sulfite pulp (subpart K)	X	X	2	2
Groundwood-chemical-mechanical (subpart L)	X	X	2	2
Groundwood-termo-mechnical (subpart M)	X	X	2	2
Groundwood-CMN papers (subpart N)	X	X	2	2
Groundwood-fine papers (subpart O)	X	X	2	2
Soda (subpart P)	X	X	2	2
Deink (subpart Q)	X	X	2	X
Nonintegrated-fine papers (subpart R)	2	X	2	2
Nonintegrated-tissue papers (subpart S)	X	X	2	X
Tissue from wastepaper (subpart T)	X	X	2	X
Papergrade sulfite (subpart U)	X	X	X	2
All other subparts (V through Z)	Determined case by case, unless superseded by regulation.			
Rubber processing	X	X	X	-
Soap and detergent manufacturing	X	X	X	-
Steam electric power plants	X	X	-	-
Textile mills	X	X	X	-
Timber products processing	X	X	X	X

2 - Do not test unless "reason to believe" it is discharged.

KOPPERS INDUSTRIES

Koppers Industries, Inc.
P.O. Box 160
Tie Plant, MS 38960

Telephone: (601) 226-4584
FAX: (601) 226-4588

April 28, 2000

RECEIVED
MAY - 1 2000
Dept. of Environmental Quality
Office of Pollution Control

CERTIFIED MAIL Z 490 517 026

Environmental Compliance Division
Office of Pollution Control
P.O. Box 10385
Jackson, MS 39289-0385

Subject: Koppers Industries, Inc.
Grenada Plant – March 2000 POTW Permit DMR

Dear sir or madam:

Enclosed you will find a copy of the March 2000 Discharge Monitoring Report for Koppers Industries, Inc. located in Tie Plant, MS. In addition, the semi-annual arsenic, chromium, and copper analysis are enclosed with this month's report. There were no exceedances during the reporting period.

If you have any questions please call 601-226-4584 ext. 40

Sincerely,

Anthony A. Mayhan

Anthony A. Mayhan
Environmental and Safety Supervisor

Cc: Tim Basilone

KOPPERS INDUSTRIES

Koppers Industries, Inc.
P.O. Box 150
Tie Plant, MS 38960

Telephone: (601) 226-4584
FAX: (601) 226-4588

March 27, 2000

CERTIFIED MAIL Z 490 517 021

RECEIVED
MAR 28 2000
Dept. of Environmental Quality
Office of Pollution Control

Environmental Compliance Division
Office of Pollution Control
P.O. Box 10385
Jackson, MS 39289-0385

Subject: Koppers Industries, Inc.
Grenada Plant – February 2000 POTW Permit DMR

Dear sir or madam:

Enclosed you will find a copy of the February 2000 Discharge Monitoring Report for Koppers Industries, Inc. located in Tie Plant, MS. There were no exceedances during the reporting period.

If you have any questions please call 601-226-4584 ext. 40

Sincerely,

Anthony A. Mayhan

Anthony A. Mayhan
Environmental and Safety Supervisor

Cc: Tim Basilone

KOPPERS INDUSTRIES

Koppers Industries, Inc.
P.O. Box 160
Tie Plant, MS 38960

Telephone: (601) 226-4584
FAX: (601) 226-4588

February 16, 2000

RECEIVED
FEB 18 2000
Miss. Dept. of Environmental Quality
Office of Pollution Control

CERTIFIED MAIL Z 490 517 019

Mr. Russ Twitty
Mississippi Dept. of Environmental Quality
P.O. Box 10385
Jackson, MS 39289-0385

Subject: Koppers Industries, Inc.
Grenada Plant – January 2000 POTW Permit DMR

Dear Mr. Twitty:

Enclosed you will find a copy of the January 2000 Discharge Monitoring Report for Koppers Industries, Inc. located in Tie Plant, MS. There were no exceedances during the reporting period.

If you have any questions please call 601-226-4584 ext. 40

Sincerely,

Anthony A. Mayhan

Anthony A. Mayhan
Environmental and Safety Supervisor

Cc: Tim Basilone

File
Grenada Co.
Koppers
MSP 090300

MISSISSIPPI DEPARTMENT OF ENVIRONMENTAL QUALITY

James I. Palmer, Jr., Executive Director

To: Russ Twitty
From: Clift Jeter, NRO
Date: August 19, 1999

Subject: Compliance Monitoring
Koppers Industries #90300
Grenada County

On August 18 & 19, 1999, I traveled to the above site to perform scheduled compliance monitoring. I met with Mr. Thomas Henderson, manager, at the site.

Samples were collected from the effluent for BOD,SS,Metals, Phenols, Pentachlorophenol,and Oil & Grease. The pH was 8.39 and the flow was .011 mgd. The water was turbid with no odor present. Samples were not split with the facility on this date.

No problems were noted at this facility during the sampling and all processes appeared to be functioning properly.

If I can be of further assistance please call.

RCJ:cj

OFFICE OF POLLUTION CONTROL
P.O. Box 10385 Jackson, MS 39289.0385 Phone 601.961.5171 Fax 601.354.6612

HSI GEOTRANS
A TETRA TECH COMPANY
46050 Manekin Plaza
Suite 100
Sterling, Virginia
20166
703-444-7000 FAX 703-444-1685

March 9, 2000

RECEIVED
MAR 13 2000
Mississippi Dept. of Environmental Quality
Office of Pollution Control

Via Facsimile
601-354-6612
and Regular Mail

W. Stephen Spengler, P.E., Chief
Timber and Wood Products Branch, EPD
Mississippi Department of Environmental Quality,
Office of Pollution Control
P.O. Box 10385
Jackson, Mississippi 39289-0385

Reference: Koppers/Beazer East Remediation, Grenada, MS
HSI GeoTrans Project No. N913-201

Dear Mr. Spengler:

A grab sample was taken on February 28, 2000 with 800,000 gallons having been discharged at the referenced site. The results of the laboratory analysis are attached. They are within the required effluent limits. This sample is the final water sample for the referenced project. Impacted water is no longer being generated. The treatment unit has been removed from the site, and no further discharge will take place.

If you have any questions please contact me.

Sincerely,

Peter A. Rich, P.E.
Principal Engineer

PAR/eb

Attachment: as stated

cc: C. Tilghman, City of Grenada
M. Bollinger
T. Rogers

D:\BEAZER\grenada\ltr-mem\ltr017.wpd
March 9, 2000

HSI GEOTRANS
A TETRA TECH COMPANY

46050 Manekin Plaza
Suite 100
Sterling, Virginia
20166
703-444-7000 FAX 703-444-1685

February 18, 2000

RECEIVED
FEB 22 2000
Dept. of Environmental Quality
Office of Pollution Control

Via Facsimile
601-354-6612
and Regular Mail

W. Stephen Spengler, P.E., Chief
Timber and Wood Products Branch, EPD
Mississippi Department of Environmental Quality,
Office of Pollution Control
P.O. Box 10385
Jackson, Mississippi 39289-0385

Reference: Koppers/Beazer East Remediation, Grenada, MS
HSI GeoTrans Project No. N913-201

Dear Mr. Spengler:

A grab sample was taken on February 14, 2000 with 720,000 gallons having been discharged at the referenced site. The results of the laboratory analysis are attached. They are within the required effluent limits.

If you have any questions please contact me.

Sincerely,

Peter A. Rich, P.E.
Principal Engineer

PAR/eb

Attachment: as stated

cc: C. Tilghman, City of Grenada
M. Bollinger
T. Rogers

D:\BEAZER\tr-mem\ltr016.wpd
February 18, 2000

COLUMBIA ANALYTICAL SERVICES, INC.

Analytical Report

Client: HSI GeoTrans, Inc.
Project: Beazer East, Tie Plant, MS/N913-201
Sample Matrix: Water

Service Request: K2000928
Date Collected: 2/8/00
Date Received: 2/9/00

Chlorinated Phenols

Sample Name: TS1-C1
Lab Code: K2000928-001
Test Notes:

Units: ug/L (ppb)
Basis: NA

Analyte	Prep Method	Analysis Method	MRL	Dilution Factor	Date Extracted	Date Analyzed	Result	Result Notes
Tetrachlorophenols, Total	EPA 3510B	8151M	0.50	1	2/14/00	2/15/00	ND	
Pentachlorophenol	EPA 3510B	8151M	0.50	1	2/14/00	2/15/00	ND ✓	
Limit							180	

Approved By:
1822/052595

Date:

COLUMBIA ANALYTICAL SERVICES, INC.

Analytical Report

Client: HSI GeoTrans, Inc.
Project: Beazer East, Tie Plant, MS/N913-201
Sample Matrix: Water

Service Request: K2000928
Date Collected: 2/8/00
Date Received: 2/9/00
Date Extracted: NA

Inorganic Parameters
Units: mg/L (ppm)

Analyte:	pH (units)	Biochemical Oxygen Demand (5-Day)	Phenolics, Total
EPA Method:	150.1	405.1	420.1
Method Reporting Limit:	-	4	0.01
Date Analyzed:	2/9/00	2/9/00	2/13/00

Sample Name	Lab Code			
TS1-C1	K2000928-001	7.21 ✓	ND ✓	0.03 ✓
Method Blank	K2000928-MB	-	-	ND
Limit		5.5 - 9.5	240	3

Approved By:
3ADW/061691

Date:

COLUMBIA ANALYTICAL SERVICES, INC.

Analytical Report

Client: HSI GeoTrans, Inc.
Project: Beazer East, Tie Plant, MS/N913-201
Sample Matrix: Water

Service Request: K2000928
Date Collected: 2/8/00
Date Received: 2/9/00
Date Extracted: 2/16/00
Date Analyzed: 2/16/00

Oil and Grease
EPA Method 413.1
Units: mg/L (ppm)

Sample Name	Lab Code	MRL	Result
TS1-C1	K2000928-001	5	ND
Method Blank	K000216-WB	5	ND
Limit			100

Approved By: _____ Date: _____

1AMRL/102594

KOPPERS INDUSTRIES

Koppers Industries, Inc.
P.O. Box 160
Tie Plant, MS 38960

Telephone: (601) 226-4584
FAX: (601) 226-4588

January 21, 2000

RECEIVED
JAN 24 2000
Office of Pollution Control

CERTIFIED MAIL Z 490 517 018

Mr. Russ Twitty
Mississippi Dept. of Environmental Quality
P.O. Box 10385
Jackson, MS 39289-0385

Subject: Koppers Industries, Inc.
Grenada Plant – DECEMBER 1999 POTW Permit DMR

Dear Mr. Twitty:

Enclosed you will find a copy of the December 1999 Discharge Monitoring Report for Koppers Industries, Inc. located in Tie Plant, MS. There were no exceedances during the reporting period.

If you have any questions please call 601-226-4584 ext. 40

Sincerely,

Anthony A. Mayhan

Anthony A. Mayhan
Environmental and Safety Supervisor

Cc: Tim Basilone

HSI GEOTRANS
A TETRA TECH COMPANY

46050 Manekin Plaza
Suite 100
Virginia
20166
4-1685
mile
612
ular Mail

File
Protected File
Document In
MSP 090301
Grenada Co.

January 20, 2000

RECEIVED
JAN 25 2000
Dept. of Environmental Quality
Office of Pollution Control

W. Stephen Spengler, P.E., Chief
Timber and Wood Products Branch, EPD
Mississippi Department of Environmental Quality,
Office of Pollution Control
P.O. Box 10385
Jackson, Mississippi 39289-0385

Reference: Koppers/Beazer East Remediation, Grenada, MS
HSI GeoTrans Project No. N913-201

Dear Mr. Spengler:

A grab sample was taken on January 12, 2000 with 640,000 gallons having been discharged at the referenced site. The results of the laboratory analysis are attached. They are within the required effluent limits.

If you have any questions please contact me.

Sincerely,

Peter A. Rich, P.E.
Principal Engineer

PAR/eb

Attachment: as stated

cc: C. Tilghman, City of Grenada
M. Bollinger
T. Rogers

D:\BEAZER\ltr-mem\ltr016.wpd
January 20, 2000

HSI GEOTRANS
A TETRA TECH COMPANY

46050 Manekin Plaza
Suite 100
Sterling, Virginia
20166

703-444-7000 FAX 703-444-1685

January 20, 2000

Via Facsimile
601-354-6612
and Regular Mail

W. Stephen Spengler, P.E., Chief
Timber and Wood Products Branch, EPD
Mississippi Department of Environmental Quality,
Office of Pollution Control
P.O. Box 10385
Jackson, Mississippi 39289-0385

Reference: Koppers/Beazer East Remediation, Grenada, MS
HSI GeoTrans Project No. N913-201

Dear Mr. Spengler:

A grab sample was taken on January 12, 2000 with 640,000 gallons having been discharged at the referenced site. The results of the laboratory analysis are attached. They are within the required effluent limits.

If you have any questions please contact me.

Sincerely,

Peter A. Rich, P.E.
Principal Engineer

PAR/eb

Attachment: as stated

cc: C. Tilghman, City of Grenada
M. Bollinger
T. Rogers

D:\BEAZER\lr-mem\lr016.wpd
January 20, 2000

MISSISSIPPI DEPARTMENT OF ENVIRONMENTAL QUALITY
James I. Palmer, Jr., Executive Director

FILE COPY

October 7, 1999

FILE COPY

Mr. Peter A. Rich, P.E.
HIS Geotrans
46050 Manekin Plaza
Suite 100
Sterling, Virginia 20166

Re: Koppers/Beazer East Remediation
Grenada, Mississippi

Dear Mr. Rich:

We have reviewed your request to increase the discharge to 40,000 gallons per day at the above referenced project. After discussions with Mr. Clovis Tilghman of the city of Grenada we are in agreement with this request for the increased discharge as long as the discharge is in compliance with the requirements set forth in my letter of August 10, 1999.

If you have any questions do not hesitate to contact me at 601-961-5070.

Sincerely,

Wm. Stephen Spengler, P.E., Chief
Timber and Wood Products Branch-EPD

cc: Mr. Clovis Tilghman

OFFICE OF POLLUTION CONTROL
P.O. Box 10385 Jackson, MS 39289.0385 Phone 601.961.5171 Fax 601.354.6612

KOPPERS INDUSTRIES

Koppers Industries, Inc.
P.O. Box 160
Tie Plant, MS 38960

Telephone: (601) 226-4584
FAX: (601) 226-4588

December 28, 1999

RECEIVED
DEC 30 1999
Dept. of Environmental Quality

CERTIFIED MAIL Z 490 517 016

Mr. Russ Twitty
Mississippi Dept. of Environmental Quality
P.O. Box 10385
Jackson, MS 39289-0385

Subject: Koppers Industries, Inc.
Grenada Plant – November 1999 POTW Permit DMR

Dear Mr. Twitty:

Enclosed you will find a copy of the November 1999 Discharge Monitoring Report for Koppers Industries, Inc. located in Tie Plant, MS. There were no exceedances during the reporting period.

If you have any questions please call 601-226-4584 ext. 40

Sincerely,

Anthony A. Mayhan

Anthony A. Mayhan
Environmental and Safety Supervisor

Cc: Tim Basilone

HSI GEOTRANS
A TETRA TECH COMPANY

46050 Manekin Plaza
Suite 100
Sterling, Virginia
20166

703-444-7000 FAX 703-444-1685

December 17, 1999

Via Facsimile
601-354-6612
and Regular Mail

W. Stephen Spengler, P.E., Chief
Timber and Wood Products Branch, EPD
Mississippi Department of Environmental Quality,
Office of Pollution Control
P.O. Box 10385
Jackson, Mississippi 39289-0385

RECEIVED
DEC 28 1999
Dept. of Environmental Quality
Office of Pollution Control

Reference: Koppers/Beazer East Remediation, Grenada, MS
HSI GeoTrans Project No. N913-201

Dear Mr. Spengler:

A grab sample was taken on December 8, 1999 with 560,000 gallons having been discharged at the referenced site. The results of the laboratory analysis are attached. They are within the required effluent limits. The next grab sample at the 640,000 gallon interval will be collected shortly.

If you have any questions please contact me.

Sincerely,

Peter A. Rich, P.E.
Principal Engineer

PAR/eb

Attachment: as stated

cc: C. Tilghman, City of Grenada
M. Bollinger
T. Rogers

D:\BEAZER\tr-mem\tr015.wpd
December 17, 1999

COLUMBIA ANALYTICAL SERVICES, INC.

Analytical Report

Client: HSI GeoTrans, Inc.
Project: Beazer East, Tie Plant, MS/N913-201
Sample Matrix: Water

Service Request: K9908825
Date Collected: 12/8/99
Date Received: 12/9/99

Chlorinated Phenols

Sample Name: TS-2-C-2
Lab Code: K9908825-001
Test Notes: C

Units: ug/L (ppb)
Basis: NA

Analyte	Prep Method	Analysis Method	MRL	Dilution Factor	Date Extracted	Date Analyzed	Result	Result Notes
Tetrachlorophenols, Total	EPA 3510B	8151M	5	10	12/10/99	12/14/99	9.9	
Pentachlorophenol	EPA 3510B	8151M	5	10	12/10/99	12/14/99	44 ✓	

Penta Limit

180

C The MRL is elevated because the sample required diluting.

Approved By:
1822/032393

Date:

COLUMBIA ANALYTICAL SERVICES, INC.

Analytical Report

Client: HSI GeoTrans, Inc.
Project: Beazer East, Tie Plant, MS/N913-201
Sample Matrix: Water

Service Request: K9908825
Date Collected: 12/8/99
Date Received: 12/9/99
Date Extracted: NA

Inorganic Parameters
Units: mg/L (ppm)

Analyte:	pH (units)	Biochemical Oxygen Demand (5-Day)	Phenolics, Total
EPA Method:	150.1	405.1	420.1
Method Reporting Limit:	-	4	0.01
Date Analyzed:	12/9/99	12/9/99	12/14/99

Sample Name	Lab Code			
TS-2-C-2	K9908825-001	7.56 ✓	ND ✓	0.05 ✓
Method Blank	K9908825-MB	-	-	ND
Limit		5.5-9.5	240	3

Approved By:
3ADW/061694

Date:

COLUMBIA ANALYTICAL SERVICES, INC.

Analytical Report

Client: HSI GeoTrans, Inc
Project: Beazer East, Tie Plant, MS/N913-201
Sample Matrix: Water

Service Request: K9908825
Date Collected: 12/8/99
Date Received: 12/9/99
Date Extracted: 12/10/99
Date Analyzed: 12/10/99

Oil and Grease
EPA Method 413.1
Units: mg/L (ppm)

Sample Name	Lab Code	MRL	Result
TS-2-C-2	K9908825-001	5	6 ✓
Method Blank	K991290-WB	5	ND
Limit			100

Approved By: _____ Date: _____

14 MKL/10/95 04

HSI GEOTRANS
A TETRA TECH COMPANY
46050 Manekin Plaza
Suite 100
Sterling, Virginia
20166
703-444-7000 FAX 703-444-1685

Koppers Industries, Inc
Tie Plant, MS
Grenada Co
MSP090300
Pentachlorophenol
SS

DEC 1999
Received

November 29, 1999

Via Facsimile
601-354-6612
and Regular Mail

W. Stephen Spengler, P.E., Chief
Timber and Wood Products Branch, EPD
Mississippi Department of Environmental Quality,
Office of Pollution Control
P.O. Box 10385
Jackson, Mississippi 39289-0385

Reference: Koppers/Beazer East Remediation, Grenada, MS
HSI GeoTrans Project No. N913-201

Dear Mr. Spengler:

A grab sample was taken on November 15, 1999 with 480,000 gallons having been discharged at the referenced site. The results of the laboratory analysis are attached. They are within the required effluent limits. The next grab sample at the 560,000 gallon interval will be collected shortly.

If you have any questions please contact me.

Sincerely,

Peter A. Rich, P.E.
Principal Engineer

PAR/eb

Attachment: as stated

cc: C. Tilghman, City of Grenada
M. Bollinger
T. Rogers

D:\BEAZER\tr-mem\ltr014.wpd
November 29, 1999

HSI GEOTRANS
A TETRA TECH COMPANY

46050 Manekin Plaza
Suite 100
Sterling, Virginia
20166
703-444-7000 FAX 703-444-1685

NOV 1999
Received
OPC

November 29, 1999

Via Facsimile
601-354-6612
and Regular Mail

W. Stephen Spengler, P.E., Chief
Timber and Wood Products Branch, EPD
Mississippi Department of Environmental Quality,
Office of Pollution Control
P.O. Box 10385
Jackson, Mississippi 39289-0385

Reference: Koppers/Beazer East Remediation, Grenada, MS
HSI GeoTrans Project No. N913-201

Dear Mr. Spengler:

A grab sample was taken on November 15, 1999 with 480,000 gallons having been discharged at the referenced site. The results of the laboratory analysis are attached. They are within the required effluent limits. The next grab sample at the 560,000 gallon interval will be collected shortly.

If you have any questions please contact me.

Sincerely,

Peter A. Rich, P.E.
Principal Engineer

PAR/eb

Attachment: as stated

cc: C. Tilghman, City of Grenada
M. Bollinger
T. Rogers

D:\BEAZER\tr-memo\tr014.wpd
November 29, 1999

File - Pretreatment
Grenada

MSP090380

KOPPERS INDUSTRIES

Koppers Industries, Inc.
P.O. Box 160
Tie Plant, MS 38960

Telephone: (601) 226-4584
FAX: (601) 226-4588

RECEIVED
NOV 29 1999
Miss. Dept. of Environmental Quality
Office of Pollution Control

November 23, 1999

CERTIFIED MAIL Z 490 517 014

Mr. Russ Twitty
Mississippi Dept. of Environmental Quality
P.O. Box 10385
Jackson, MS 39289-0385

Subject: Koppers Industries, Inc.
Grenada Plant – October 1999 POTW Permit DMR

Dear Mr. Twitty:

Enclosed you will find a copy of the October 1999 Discharge Monitoring Report for Koppers Industries, Inc. located in Tie Plant, MS. The arsenic, copper, and chromium DMR is included for July 99 – December 99. There were no exceedances during the reporting period.

If you have any questions please call 601-226-4584 ext. 40

Sincerely,

Anthony A. Mayhan

Anthony A. Mayhan
Environmental and Safety Supervisor

Cc: Tim Basilone

HSI GEOTRANS
A TETRA TECH COMPANY

46050 Manekin Plaza
Suite 100
Sterling, Virginia
20166

703-444-7000 FAX 703-444-1685

November 19, 1999

Via Facsimile
601-354-6612
and Regular Mail

W. Stephen Spengler, P.E., Chief
Timber and Wood Products Branch, EPD
Mississippi Department of Environmental Quality,
Office of Pollution Control
P.O. Box 10385
Jackson, Mississippi 39289-0385

RECEIVED
NOV 29 1999
Mississippi Department of Environmental Quality
Office of Pollution Control

Reference: Koppers/Beazer East Remediation, Grenada, MS
HSI GeoTrans Project No. N913-201

Dear Mr. Spengler:

A grab sample was taken on November 1, 1999 with 400,000 gallons having been discharged at the referenced site. The results of the laboratory analysis are attached. They are within the required effluent limits. The reporting delay for this sample was due to an unusual laboratory backlog problem. The next grab sample at the 480,000 gallon interval was collected on November 15, 1999.

If you have any questions please contact me.

Sincerely,

Peter A. Rich, P.E.
Principal Engineer

PAR/eb

Attachment: as stated

cc: C. Tilghman, City of Grenada
M. Bollinger
T. Rogers

D:\BEAZER\ltr-mem\ltr013.wpd
November 19, 1999

HSI GEOTRANS
A TETRA TECH COMPANY

46050 Manekin Plaza
Suite 100
Sterling, Virginia
20166

703-444-7000 FAX 703-444-1685

November 19, 1999

Via Facsimile
601-354-6612
and Regular Mail

W. Stephen Spengler, P.E., Chief
Timber and Wood Products Branch, EPD
Mississippi Department of Environmental Quality,
Office of Pollution Control
P.O. Box 10385
Jackson, Mississippi 39289-0385

Reference: Koppers/Beazer East Remediation, Grenada, MS
HSI GeoTrans Project No. N913-201

Dear Mr. Spengler:

A grab sample was taken on November 1, 1999 with 400,000 gallons having been discharged at the referenced site. The results of the laboratory analysis are attached. They are within the required effluent limits. The reporting delay for this sample was due to an unusual laboratory backlog problem. The next grab sample at the 480,000 gallon interval was collected on November 15, 1999.

If you have any questions please contact me.

Sincerely,

Peter A. Rich, P.E.
Principal Engineer

PAR/eb

Attachment: as stated

cc: C. Tilghman, City of Grenada
M. Bollinger
T. Rogers

NOV 1999
Received
OPC

D:\BEAZER\ltr-mem\ltr013.wpd
November 19, 1999

FILE COPY

MISSISSIPPI DEPARTMENT OF ENVIRONMENTAL QUALITY
James I. Palmer, Jr., Executive Director

November 16, 1999

Mr. Thomas Henderson, Plant Manager
Koppers Industries, Inc.
P.O. Box 160
Grenada, MS 38960

Re: Compliance Monitoring Inspection
Koppers Industries, Inc.
Pretreatment Permit No. MSP090300
Grenada County-Tie Plant, MS

Dear Mr. Henderson:

Enclosed is a copy of the Pretreatment Compliance Monitoring Inspection Report completed as a result of this Office's inspection at Koppers Industries on August 19, 1999. There were no violations of the discharge limitations. The results of this inspection should be used by you as a guide for complying with requirements found in your Pretreatment permit.

If you have any questions concerning this matter, please contact us at 961-5171.

Sincerely,

Russ Twitty, P.E.
Environmental Compliance and Enforcement Division

Enclosure
cc: Ms. Jo Sharp, DEQ (w/enclosure)

OFFICE OF POLLUTION CONTROL
P.O. Box 10385 Jackson, MS 39289.0385 Phone 601.961.5171 Fax 601.354.6612

MISSISSIPPI DEPARTMENT OF ENVIRONMENTAL QUALITY
James I. Palmer, Jr., Executive Director

TO: Russ Twitty

FROM: Lynne Burrell, NRO

DATE: November 16, 1999

SUBJECT: Kopper's Industries, Inc.
#90300
Grenada County

On November 15, 1999, I went to the above site to do compliance monitoring sampling. I met with Monroe Harper. A 24-hr composite sampler was set up at the effluent access port.

On November 16, 1999, I split the composite with Mr. Harper. Composite samples were taken for BOD, SS, Cu, Cr, and As. The composite sample temperature was 5 C. Grab samples were taken for Phenols, Pentachlorophenol, Oil & Grease, and pH. The pH was 7.9 at 23 C. The flow was 0.016200 MGD. The effluent was a light brown in color.

We discussed their sampling procedures. They need to ice their composite sampler. They also need to calibrate their composite sampler when they change their sampler tubing, and record the calibrations. They are using two standards to calibrate their pH meter, and recording the calibrations. They need to make sure the standards used bracket the pH of the sample.

If I may be of further help, please advise.

OFFICE OF POLLUTION CONTROL
P.O. Box 10385 Jackson, MS 39289.0385 Phone 601.961.5171 Fax 601.354.6612

HSI GEOTRANS
A TETRA TECH COMPANY
46050 Manekin Plaza
Suite 100
Sterling, Virginia
20166
703-444-7000 FAX 703-444-1685

November 3, 1999

RECEIVED
NOV - 8 1999
Dept. of Environmental Quality
Office of Pollution Control

W. Stephen Spengler, P.E., Chief
Timber and Wood Products Branch, EPD
Mississippi Department of Environmental Quality,
Office of Pollution Control
P.O. Box 10385
Jackson, Mississippi 39289-0385

Reference: Koppers/Beazer East Remediation, Grenada, MS
HSI GeoTrans Project No. N913-201

Dear Mr. Spengler:

A grab sample was taken on October 25, 1999 prior to 320,000 gallons being discharged at the referenced site. The results of the laboratory analysis are attached. They are within the required effluent limits. The minimal discharge in late September and early October was due to treatment system downtime for repairs. The next grab sample at the 400,000 gallon interval was collected on November 1, 1999.

If you have any questions please contact me.

Sincerely,

Peter A. Rich, P.E.
Principal Engineer

PAR/eb

Attachment: as stated

cc: C. Tilghman, City of Grenada
M. Bollinger
T. Rogers

D:\BEAZER\ltr-mem\ltr013.wpd
November 3, 1999

File - Pretreatment
Grenada

KOPPERS INDUSTRIES

Koppers Industries, Inc.
P.O. Box 160
Tie Plant, MS 38960

Telephone: (601) 226-4584
FAX: (601) 226-4588

October 27, 1999

RECEIVED
OCT 28 1999
Miss. Dept. of Environmental Quality
Office of Pollution Control

CERTIFIED MAIL Z 490 517 012

Mr. Russ Twitty
Mississippi Dept. of Environmental Quality
P.O. Box 10385
Jackson, MS 39289-0385

Subject: Koppers Industries, Inc.
Grenada Plant – September 1999 POTW Permit DMR

Dear Mr. Twitty:

Enclosed you will find a copy of the September 1999 Discharge Monitoring Report for Koppers Industries, Inc. located in Tie Plant, MS. There were no exceedances during the reporting period.

If you have any questions please call 601-226-4584 ext. 40

Sincerely,

Anthony A. Mayhan

Anthony A. Mayhan
Environmental and Safety Supervisor

Cc: Tom DuPlessis

Koppers Existing Permit Limit : .053 #/day (AVG) , .105 #/DAY (MAX)
Q_{10y} Yalobusha RIVER : 35.6 MGD
Q_{POTW} : 2.24 MGD
Penta (Chronic Water Quality Std : .0021 ppm
Q Remediation Project = .06

$$IWC = \frac{(2.24 + \overset{.04}{\cancel{.06}})}{(2.24 + .06) + 35.6} = \frac{\overset{2.28}{2.3}}{2.3 + 35.6}$$

$$= .061 \text{ or } 6.1\%$$

$$\text{Allowable POTW Discharge} = \frac{C_{penta}}{IWC} = \frac{.0021}{.061} = .034 \text{ ppm}$$

$$\#/day = (.034)(8.34)(2.3)$$
$$= .66 \ \#/DAY$$

Available Penta from POTW
= Allowable − Koppers
= .66 #/day − .053
Avail for Penta = .61 #/DAY

Proposed Remediation : @ Q_{Rem} = ~~.06~~ .04 mgd
Penta conc = .18
= (.06) (.18)(8.34)
= .06 #/day

Increase to .04 should not pose any probles.

Assume No removal thro system
Discussed w/ Clovis Tightman on 10/6/99

HSI GEOTRANS
A TETRA TECH COMPANY
46050 Manekin Plaza
Suite 100
Sterling, Virginia
20166
703-444-7000 FAX 703-444-1685

September 30, 1999

RECEIVED
OCT - 5 1999
Dept. of Environmental Quality
Office of Pollution Control

W. Stephen Spengler, P.E., Chief
Timber and Wood Products Branch, EPD
Mississippi Department of Environmental Quality,
Office of Pollution Control
P.O. Box 10385
Jackson, Mississippi 39289-0385

Reference: Koppers/Beazer East Remediation, Grenada, MS
HSI GeoTrans Project No. N913-202

Dear Mr. Spengler:

Per your August 10, 1999 letter, a grab sample was taken on September 20, 1999 prior to 240,000 gallons being discharged at the referenced site. The results of the laboratory analysis are attached. They are within the required effluent limits. However, we plan to replace the organoclay and granular activated carbon media this week due to the relatively higher results in comparison with the previous sample. We will take our next grab sample at the 320,000 gallon interval. This will occur on or about October 6, 1999.

We request an increase in our maximum discharge volume to 40,000 gallons per day due to the continuing necessity of recovering water during our remediation efforts. Please contact me regarding this request.

Sincerely,

Ellen Barr

for Peter A. Rich, P.E.
Principal Engineer

PAR/eb

Attachment: as stated

cc: C. Tilghman, City of Grenada
M. Bollinger
T. Rogers

D:\BEAZER\ltr-mem\ltr012.wpd
September 30, 1999

FILE- Pretreatment
Grenada

KOPPERS INDUSTRIES

Koppers Industries, Inc.
P.O. Box 160
Tie Plant, MS 38960

Telephone (601) 226-4584
FAX (601) 226-4588

September 29, 1999

RECEIVED
OCT - 1 1999
Dept. of Environmental Quality
Office of Pollution Control

CERTIFIED MAIL Z 490 517 011

Mr. Russ Twitty
Mississippi Dept. of Environmental Quality
P.O. Box 10385
Jackson, MS 39289-0385

Subject: Koppers Industries, Inc.
Grenada Plant – August 1999 POTW Permit DMR

Dear Mr. Twitty:

Enclosed you will find a copy of the August 1999 Discharge Monitoring Report for Koppers Industries, Inc. located in Tie Plant, MS. There were no exceedances during the reporting period.

If you have any questions please call 601-226-4584 ext. 40

Sincerely,

Anthony A. Mayhan

Anthony A. Mayhan
Environmental and Safety Supervisor

Cc: Tom DuPlessis

HSI GEOTRANS
A TETRA TECH COMPANY
46050 Manekin Plaza
Suite 100
Sterling, Virginia
20166
703-444-7000 FAX 703-444-1685

SEP 1999
Received
OPB

September 22, 1999

W. Stephen Spengler, P.E., Chief
Timber and Wood Products Branch, EPD
Mississippi Department of Environmental Quality,
Office of Pollution Control
P.O. Box 10385
Jackson, Mississippi 39289-0385

Reference: Koppers/Beazer East Remediation, Grenada, MS
HSI GeoTrans Project No. N913-202

Dear Mr. Spengler:

Per your August 10, 1999 letter, a grab sample was taken on September 13, 1999 prior to 160,000 gallons being discharged at the referenced site. The results of the laboratory analysis are attached. They are within the required effluent limits. We took our next grab sample at the 240,000 gallon interval. This occurred on September 21, 1999.

If you have any questions please contact me.

Sincerely,

Peter A. Rich, P.E.
Principal Engineer

PAR/eb

Attachment: as stated

cc: C. Tilghman, City of Grenada
M. Bollinger
T. Rogers

D:\BEAZER\ltr-mem\ltr011.wpd
September 22, 1999

Koppers Grenada MSD090

HSI GEOTRANS
A TETRA TECH COMPANY
46050 Manekin Plaza
Suite 100
Sterling, Virginia
20166
703-444-7000 FAX 703-444-1685

September 3, 1999

RECEIVED
SEP 13 1999
Dept. of Environmental Quality
Office of Pollution Control

W. Stephen Spengler, P.E., Chief
Timber and Wood Products Branch, EPD
Mississippi Department of Environmental Quality,
Office of Pollution Control
P.O. Box 10385
Jackson, Mississippi 39289-0385

Reference: Koppers/Beazer East Remediation, Grenada, MS
HSI GeoTrans Project No. N913-202

Dear Mr. Spengler:

Per your August 10, 1999 letter, a grab sample was taken on August 23, 1999 during our fourth night of discharge prior to 80,000 gallons being discharged. The results of the laboratory analysis are attached. They are within the required effluent limits. We will take our next grab sample at the 160,000 gallon interval. This will occur on/or about September 9, 1999.

If you have any questions please contact me.

Sincerely,

Peter A. Rich, P.E.
Principal Engineer

PAR/eb

Attachment: as stated

cc: C. Tilghman, City of Grenada
M. Bollinger
T. Rogers

HSI GEOTRANS
A TETRA TECH COMPANY

46050 Manekin Plaza
Suite 100
Sterling, Virginia
20166

703-444-7000 FAX 703-444-1685

601 961 5703

MSP 090 300

September 3, 1999

W. Stephen Spengler, P.E., Chief
Timber and Wood Products Branch, EPD
Mississippi Department of Environmental Quality,
Office of Pollution Control
P.O. Box 10385
Jackson, Mississippi 39289-0385

Reference: Koppers/Beazer East Remediation, Grenada, MS
HSI GeoTrans Project No. N913-202

Dear Mr. Spengler:

Per your August 10, 1999 letter, a grab sample was taken on August 23, 1999 during our fourth night of discharge prior to 80,000 gallons being discharged. The results of the laboratory analysis are attached. They are within the required effluent limits. We will take our next grab sample at the 160,000 gallon interval. This will occur on/or about September 9, 1999.

If you have any questions please contact me.

Sincerely,

Peter A. Rich, P.E.
Principal Engineer

PAR/eb

Attachment: as stated

cc: C. Tilghman, City of Grenada
M. Bollinger
T. Rogers

COLUMBIA ANALYTICAL SERVICES, INC.

Analytical Report

Client: HSI GeoTrans
Project: Beazer East/Tie Plant, MS /N915-202
Sample Matrix: Water

Service Request: K9905677
Date Collected: 8/23/99
Date Received: 8/24/99
Date Extracted: 8/27/99
Date Analyzed: 8/27/99

Oil and Grease
EPA Method 413.1
Units: mg/L (ppm)

Sample Name	Lab Code	MRL	Result
Beazer East Treatment System	K9905677-001	5	ND
Method Blank	K990827-WB	5	ND

Limit = 100 mg/L

Approved By: _____ Date: _____

COLUMBIA ANALYTICAL SERVICES, INC.

Analytical Report

Client:	HSI GeoTrans	Service Request:	K9905677
Project:	Beaver East/Tie Plant, MS/N913-202	Date Collected:	8/23/99
Sample Matrix:	Water	Date Received:	8/24/99

Pentachlorophenol

Sample Name:	Beaver East Treatment System	Units:	ug/L (ppb)
Lab Code:	K9905677-001	Basis:	NA
Test Notes:			

Analyte	Prep Method	Analysis Method	MRL	Dilution Factor	Date Extracted	Date Analyzed	Result	Result Notes
Pentachlorophenol	EPA 3510B	8151M	0.5	1	8/28/99	8/30/99	1.5	

Limit = 0.18 mg/L
180 ug/L

Approved By: Date:

COLUMBIA ANALYTICAL SERVICES, INC.

Analytical Report

Client:	HSI GeoTrans	**Service Request:**	K9905677
Project:	Beazer East/Tie Plant, MS./N913-202	**Date Collected:**	8/23/99
Sample Matrix:	Water	**Date Received:**	8/24/99
		Date Extracted:	NA

Inorganic Parameters
Units: mg/L (ppm)

Analyte:	pH (units)	Biochemical Oxygen Demand (5-Day)	Phenolics, Total
EPA Method:	150.1	405.1	420.1
Method Reporting Limit:	-	4	0.01
Date Analyzed:	8/24/99	8/25/99	8/28/99

Sample Name	Lab Code			
Beazer East Treatment System	K9905677-001	6.62	ND	0.01
Method Blank	K9905677-MB	-	-	ND
Limits		5.5 - 9.0	240 mg/l	3 mg/l

Approved By: Date:

MS0906169

HSI GEOTRANS
A TETRA TECH COMPANY

46050 Manekin Plz., Ste. 100 ◆ Sterling, VA 20166 ◆ (703) 444-7000 ◆ Fax: (703) 444-1685

FAX TRANSMISSION COVER SHEET

TO: Steve Spengler
cc M. Wheeler, M. Bollinger, T. Rogers

Date: 8/18/99

From: Peter Rich

No. Of Pages: (including cover sheet) 2

Fax No.: 601 961 5703
724 468 3344 412 208 8869

Phone No.: 601 294 6558

Notes:

BOD result from initial batch sample

IF YOU DO NOT RECEIVE THE NUMBER OF PAGES LISTED ABOVE, PLEASE CALL.

Albany, NY (518) 458-9285 (518) 458-9284 (FAX)	Costa Mesa, CA (714) 513-1415 (714) 513-1278 (FAX)	Milwaukee, WI (414) 792-1282 (414) 792-1310 (FAX)	Sterling, VA (703) 444-7000 (703) 444-1685 (FAX)	Tucson, AZ *(Herb Hoffman)* (520) 825-6518 (520) 825-6394 (FAX)
Ann Arbor, MI (734) 213-4085 (734) 213-5008 (FAX)	Freehold, NJ (732) 409-0344 (732) 409-3020 (FAX)	Puerto Rico (787) 774-8776 (787) 774-8799 (FAX)	Tempe, AZ (602) 839-2800 (602) 839-2828 (FAX)	
Atlanta, GA (770) 642-1000 (770) 642-8808 (FAX)	Harvard, MA (508) 772-7557 (508) 772-6183 (FAX)	Reno, NV (775) 324-5900 (775) 324-5924 (FAX)	Washington *(Gordon Ballentine)* (206) 286-1929	
Canby, OR *(John Collins)* (503) 266-1581	King of Prussia, PA *(John Gee)* (610) 491-9688 (610) 491-9645 (FAX)	Richmond, VA (804) 346-5433 (804) 346-5432	Westminster, CO (303) 426-7501 (303) 426-7780 (FAX)	
Concord, NH *(Theresa Lopez)* (603) 227-9591 (603) 225-4946 (FAX)	Las Vegas, NV (702) 295-2033 (702) 295-2025 (FAX)	Sacramento, CA (916) 853-1800 (916) 853-1860 (FAX)	Tucson, AZ *(Michael Monroy)* (520) 620-6392 (520) 620-6394 (FAX)	

This facsimile contains PRIVILEGED AND CONFIDENTIAL INFORMATION intended only for the use of the Addressee(s) named above. If you are not the intended recipient of this facsimile, or employee or agent responsible for delivering it to the intended recipient, you are hereby notified that any dissemination or copying of this facsimile is strictly prohibited. If you have received this facsimile in error, please immediately notify us by Telephone and return the original facsimile to us at the above address via the U.S. Postal Service. Thank you.

KOPPERS INDUSTRIES

Koppers Industries, Inc.
P.O. Box 160
Tie Plant, MS 38960

Telephone: (601) 226-4584
FAX: (601) 226-4588

RECEIVED
AUG 19 1999
Dept. of Environmental Quality
Office of Pollution Control

August 17, 1999

CERTIFIED MAIL Z 490 517 006

Mr. Lance Puckett
Mississippi Dept. of Environmental Quality
P.O. Box 10385
Jackson, MS 39289-0385

Subject: Koppers Industries, Inc.
Grenada Plant – July 1999 POTW Permit DMR

Dear Mr. Puckett:

Enclosed you will find a copy of the July 1999 Discharge Monitoring Report for Koppers Industries, Inc. located in Tie Plant, MS. There were no exceedances during the reporting period.

If you have any questions please call 601-226-4584 ext. 40

Sincerely,

Anthony A. Mayhan

Anthony A. Mayhan
Environmental and Safety Supervisor

Cc: Tom DuPlessis

HSI GEOTRANS
A TETRA TECH COMPANY

46050 Manekin Plz., Ste. 100 ◆ Sterling, VA 20166 ◆ (703) 444-7000 ◆ Fax: (703) 444-1685

FAX TRANSMISSION COVER SHEET

TO: Steve Spengler
cc M. Wheeler, M. Bollinger, T. Rogers

Date: 8/16/99

From: Peter Rich

No. Of Pages: (including cover sheet) 4

Fax No.: (601) 961 5703

Phone No.:
724 468 3344 412 208 8869 601 294 0558

Notes:

Laboratory results from initial batch prior to discharge.
I added the limits from your August 10, 1999 letter for comparison.
We are well within the limits.
The BOD (5-day) results will be available 8/18/99.
We would like to treat a 20,000 gallon batch tomorrow night.
Please let me know if this is acceptable.

IF YOU DO NOT RECEIVE THE NUMBER OF PAGES LISTED ABOVE, PLEASE CALL.

Albany, NY (518) 458-9285 (518) 458-9284 (FAX)	Costa Mesa, CA (714) 513-1415 (714) 513-1278 (FAX)	Milwaukee, WI (414) 792-1282 (414) 792-1310 (FAX)	Sterling, VA (703) 444-7000 (703) 444-1685 (FAX)	Tucson, AZ *(Herb Hoffman)* (520) 825-6518 (520) 825-6394 (FAX)
Ann Arbor, MI (734) 213-4085 (734) 213-5008 (FAX)	Freehold, NJ (732) 409-0344 (732) 409-3020 (FAX)	Puerto Rico (787) 774-8776 (787) 774-8799 (FAX)	Tempe, AZ (602) 839-2800 (602) 839-2828 (FAX)	
Atlanta, GA (770) 642-1000 (770) 642-8808 (FAX)	Harvard, MA (508) 772-7557 (508) 772-6183 (FAX)	Reno, NV (775) 324-5900 (775) 324-5924 (FAX)	Washington *(Gordon Ballentine)* (206) 286-1929	
Canby, OR *(John Collins)* (503) 266-1581	King of Prussia, PA *(John Gee)* (610) 491-9688 (610) 491-9645 (FAX)	Richmond, VA (804) 346-5433 (804) 346-5432	Westminster, CO (303) 426-7501 (303) 426-7780 (FAX)	
Concord, NH *(Theresa Lopez)* (603) 227-9591 (603) 225-4946 (FAX)	Las Vegas, NV (702) 295-2033 (702) 295-2025 (FAX)	Sacramento, CA (916) 853-1800 (916) 853-1860 (FAX)	Tucson, AZ *(Michael Montroy)* (520) 620-6392 (520) 620-6394 (FAX)	

This facsimile contains PRIVILEGED AND CONFIDENTIAL INFORMATION intended only for the use of the Addressee(s) named above. If you are not the intended recipient of this facsimile, or employee or agent responsible for delivering it to the intended recipient, you are hereby notified that any dissemination or copying of this facsimile is strictly prohibited. If you have received this facsimile in error, please immediately notify us by Telephone and return the original facsimile to us at the above address via the U.S. Postal Service. Thank you.

COLUMBIA ANALYTICAL SERVICES, INC.

Analytical Report

Client: HSI GeoTrans
Project: Beazer East/Tie Plant, MS./N913-202
Sample Matrix: Water

Service Request: K9905362
Date Collected: 8/11/99
Date Received: 8/12/99
Date Extracted: 8/14/99
Date Analyzed: 8/16/99

Chlorinated Phenols
EPA Methods 8151 Modified
Units: µg/L (ppb)

Analyte:	Total Tetrachlorophenols	Pentachlorophenol
Method Reporting Limit:	0.5	0.5
Sample Name	**Lab Code**	
Beazer East Treatment System	K9905362-001	ND	2.5
Method Blank	K990814-WB	ND	ND
LIMIT		180

Approved By: _____ Date: _____

COLUMBIA ANALYTICAL SERVICES, INC.

Analytical Report

Client: HSI GeoTrans
Project: Beazer East/Tie Plant, MS./N913-202
Sample Matrix: Water

Service Request: K9905362
Date Collected: 8/11/99
Date Received: 8/12/99
Date Extracted: NA

Inorganic Parameters
Units: mg/L (ppm)

Analyte:	pH (units)	Phenolics, Total	Solids, Total Suspended (TSS)
EPA Method:	150.1	420.1	160.2
Method Reporting Limit:	--	0.01	5
Date Analyzed:	8/12/99	8/14/99	8/13/99

Sample Name	Lab Code			
Beazer East Treatment System	K9905362-001	8.58	0.04	19
Method Blank	K9905362-MB	-	ND	ND
LIMIT		5.5 to 9.5	3	NA

Approved By:

Date:

COLUMBIA ANALYTICAL SERVICES, INC.

Analytical Report

Client: HSI GeoTrans
Project: Beazer East/Tie Plant, MS /N913-202
Sample Matrix: Water

Service Request: K9905362
Date Collected: 8/11/99
Date Received: 8/12/99
Date Extracted: 8/16/99
Date Analyzed: 8/16/99

Oil and Grease
EPA Method 413.1
Units: mg/L (ppm)

Sample Name	Lab Code	MRL	Result
Beazer East Treatment System	K9905362-001	5	ND
Method Blank	K990816-WB	5	ND
LIMIT			100

Approved By: _____ Date: _____

MISSISSIPPI DEPARTMENT OF ENVIRONMENTAL QUALITY
James I. Palmer, Jr., Executive Director

August 10, 1999

FILE COPY

Mr. Peter Rich, P.E., Principal Engineer
HSI GEOTRANS
46050 Manekin Plaza, Suite 100
Sterling, Virginia 20166

Dear Mr. Rich:

Re: Koppers/Beazer East Remediation
Grenada, Mississippi

We have reviewed your letter dated August 5, 1999 regarding the need for disposal of wastewater generated from the remediation of creosote contaminated sediments at the Koppers/Beazer East site in Grenada, Mississippi. After discussions with Mr. Clovis Tilghman of the City of Grenada, we have agreed that this discharge may be made to the sanitary sewer without a state pretreatment permit provided that the following criteria are met:

1. The discharge shall not exceed 20,000 gallons per day.
2. All wastewater shall be minimally treated by a prefilter, organic clay filtration, and granular activated carbon adsorption. The wastewater treatment system shall be operated and maintained for maximum pollutant removal at all times.
3. The flow shall be discharged to the POTW(publically owned treatment works) at a constant rate during non-peak hours (8:00 p.m. to 6:00 a.m.).
4. The discharge shall not exceed the following effluent limits:
   a. Biochemical Oxygen Demand (5-day)- 240 mg/l
   b. Oil and Grease – 100 mg/l
   c. Total Phenols – 3 mg/l
   d. Pentachlorophenol - .18 mg/l
   e. The pH shall not be less than 5.5 s.u. not greater than 9.5 s.u.
   f. Shall not discharge any pollutants which might cause interference with the operation of the POTW or cause water quality violations in the POTW effluent.
5. A sample of the pretreated wastewater shall be taken and analyzed for the parameters in number 4 above above and submitted to this office prior to commencement of discharge.
6. After commencement of discharge a grab sample of the effluent shall be taken and analyzed for the parameters in number 4 above for every 80,000 gallons of wastewater discharged.
7. The results of all samples should be submitted to our office and the City of Grenada within 14 days after sample collection.
8. In addition to the requirements set forth in this letter, HSI GEOTRANS shall comply with any and all requirements which the City of Grenada may have in its sewer use ordinance.

If you have any questions, do not hesitate to contact me at 601-961-5070.

Sincerely,

Wm. Stephen Spengler, P.E., Chief
Timber and Wood Products Branch, EPD

cc: Mr. Clovis Tilghman

OFFICE OF POLLUTION CONTROL
P.O. Box 10385 Jackson, MS 39289.0385 Phone 601.961.5171 Fax 601.354.6612

HSI GEOTRANS
A TETRA TECH COMPANY
46050 Manekin Plaza
Suite 100
Sterling, Virginia
20166
703-444-7000 FAX 703-444-1685

August 5, 1999

By Facsimile

RECEIVED
AUG 12 1999
Dept. of Environmental Quality
Office of Pollution Control

Steve Spengler
Mississippi Department of Environmental Quality
Office of Pollution Control
P.O. Box 10385
Jackson, Mississippi 39289-0385

Reference: Interim Measure at Koppers/Beazer East, Grenada, MS

Dear Mr. Spengler:

HSI GeoTrans is submitting this letter to request authorization to discharge to the POTW from the referenced facility. Beazer East is in the process of implementing an Interim Measure at the facility's Solid Waste Management Unit (SWMU) 11 which includes a former wastewater lagoon and the Central Ditch. The Interim Measure, approved by EPA Region IV, involves the removal of sediments impacted by creosote and realignment of the ditch through the site, among other activities. During this work we have collected a significantly greater volume of water impacted with creosote than was expected. This variance has been due to numerous hydrogeologic, hydrologic and climatic factors.

At present, we have approximately 65,000 gallons of water requiring disposal; and based on our experience thus far, expect to collect up to several hundred thousand additional gallons over the next three to four months. Based on our conversations we understand that the POTW would be willing to consider discharge of batches of treated water during off peak hours with discharge requirements equivalent to the existing Koppers facility pretreatment standards (table attached) not including the copper, chromium, and arsenic (CCA) components which will not require monitoring.

Beazer intends to procure a 50 gpm treatment unit including a prefilter, organic clay filtration and granular activated carbon adsorption unit to treat the water to the pretreatment standards. We understand that you wish to see the results of an initial batch treatment prior to allowing flow through treatment, following which periodic sampling will be required. We propose to treat batches at 50 gpm for the hours you designate, so that if 12 hours are allowed the batch treated would be 36,000 gallons.

We appreciate your consideration in this matter. If you have any questions please contact me.

Sincerely,

Peter A. Rich, P.E.
Principal Engineer

PAR/eb
Attachment: as stated
cc: M. Bollinger
M. Wheeler
T. Rogers

D:\BEAZER\grenada\ltr-mem\ltr003.wpd
August 5, 1999

KOPPERS INDUSTRIES

Koppers Industries, Inc.
P.O. Box 160
Tie Plant, MS 38960

Telephone (601) 226-4584
FAX (601) 226-4588

July 19, 1999

RECEIVED
JUL 22 1999
Dept. of Environmental Quality
Office of Pollution Control

CERTIFIED MAIL Z 490 517 010

Mr. Lance Puckett
Mississippi Dept. of Environmental Quality
P.O. Box 10385
Jackson, MS 39289-0385

Subject: Koppers Industries, Inc.
Grenada Plant – June 1999 POTW Permit DMR

Dear Mr. Puckett:

Enclosed you will find a copy of the June 1999 Discharge Monitoring Report for Koppers Industries, Inc. located in Tie Plant, MS. There were no exceedances during the reporting period.

If you have any questions please call 601-226-4584 ext. 40

Sincerely,

Anthony A. Mayhan

Anthony A. Mayhan
Environmental and Safety Supervisor

Cc: Tom DuPlessis

KOPPERS INDUSTRIES

Koppers Industries, Inc
P.O. Box 160
Tie Plant, MS 38960

Telephone (601) 226-4584
FAX (601) 226-4588

RECEIVED
JUN 18 1999
Dept. of Environmental Quality
Office of Pollution Control

June 16, 1999

CERTIFIED MAIL Z 490 517 004

Mr. Lance Puckett
Mississippi Dept. of Environmental Quality
P.O. Box 10385
Jackson, MS 39289-0385

Subject: Koppers Industries, Inc.
Grenada Plant - May 1999 POTW Permit DMR and Six Month Report

Dear Mr. Puckett:

Enclosed you will find a copy of the May 1999 Discharge Monitoring Report for Koppers Industries, Inc. located in Tie Plant, MS. There were no exceedances during the reporting period.

Also, I have included the six month report – Arsenic, Chromium, and Copper DMR.

If you have any questions please call 601-226-4584 ext. 40

Sincerely,

Anthony A. Mayhan

Anthony A. Mayhan
Environmental and Safety Supervisor

KOPPERS INDUSTRIES

Koppers Industries, Inc.
P.O. Box 160
Tie Plant, MS 38960

Telephone (601) 226-4584
FAX (601) 226-4586

RECEIVED
MAY 14 1999
Dept. of Environmental Quality
Office of Pollution Control

May 12, 1999

CERTIFIED MAIL Z 490 517 009

Mr. Lance Puckett
Mississippi Dept. of Environmental Quality
P.O. Box 10385
Jackson, MS 39289-0385

Subject: Koppers Industries, Inc.
Grenada Plant - April 1999 POTW Permit DMR

Dear Mr. Puckett:

Enclosed you will find a copy of the April 1999 Discharge Monitoring Report for Koppers Industries, Inc. located in Tie Plant, MS. There were no exceedances during the reporting period.

If you have any questions please call 601-226-4584 ext. 40

Sincerely,

Anthony A. Mayhan

Anthony A. Mayhan
Environmental and Safety Supervisor

FILE COPY

MISSISSIPPI DEPARTMENT OF ENVIRONMENTAL QUALITY
James I. Palmer, Jr., Executive Director

May 3, 1999

Mr. Thomas Henderson, Plant Manager
Koppers Industries, Inc.
P.O. Box 160
Grenada, MS 38960

Re: Compliance Evaluation Inspection
Koppers Industries
Pretreatment Permit No. MSP090300
Grenada County-Tie Plant, MS

Dear Mr. Henderson:

Enclosed is a copy of the Compliance Evaluation Inspection Report that was completed as a result of our inspection at Koppers Industries on March 2, 1999. The results of this inspection should be used by you as a guide for complying with requirements found in your Pretreatment Permit. Specifically, the deficiencies identified by bold print in Section D should be addressed.

If you have any questions concerning this matter, please contact us at 961-5171.

Sincerely,

Russ Twitty, P.E.
Environmental Compliance and Enforcement Division

Enclosure
cc: Ms. Jo Sharp (w/enclosure)

OFFICE OF POLLUTION CONTROL
P.O. Box 10385 Jackson, MS 39289.0385 Phone 601.961.5171 Fax 601.354.6612

KOPPERS INDUSTRIES

Koppers Industries, Inc.
P.O. Box 160
Tie Plant, MS 38960

Telephone (601) 226-4584
FAX (601) 226-4588

April 20, 1999

RECEIVED
APR 21 1999
Miss. dept. of Environmental Quality
Office of Pollution Control

CERTIFIED MAIL Z 538 934 774

Mr. Lance Puckett
Mississippi Dept. of Environmental Quality
P.O. Box 10385
Jackson, MS 39289-0385

Subject: Koppers Industries, Inc.
Grenada Plant - March 1999 POTW Permit DMR

Dear Mr. Puckett:

Enclosed you will find a copy of the March 1999 Discharge Monitoring Report for Koppers Industries, Inc. located in Tie Plant, MS. There were no exceedances during the reporting period.

If you have any questions please call 601-226-4584 ext. 40

Sincerely,

Anthony A. Mayhan

Anthony A. Mayhan
Environmental and Safety Supervisor

KOPPERS INDUSTRIES

Koppers Industries, Inc.
P.O. Box 160
Tie Plant, MS 38960

Telephone (601) 226-4584
FAX (601) 226-4588

March 15, 1999

RECEIVED
MAR 17 1999
Dept. of Environmental Quality
Office of Pollution Control

CERTIFIED MAIL Z 538 934 773

Mr. Lance Puckett
Mississippi Dept. of Environmental Quality
P.O. Box 10385
Jackson, MS 39289-0385

Subject: Koppers Industries, Inc.
Grenada Plant - February 1999 POTW Permit DMR

Dear Mr. Puckett:

Enclosed you will find a copy of the February 1999 Discharge Monitoring Report for Koppers Industries, Inc. located in Tie Plant, MS. There were no exceedances during the reporting period.

If you have any questions please call 601-226-4584 ext. 40

Sincerely,

Anthony A. Mayhan
Environmental and Safety Supervisor

KOPPERS INDUSTRIES

Koppers Industries, Inc.
P.O. Box 160
Tie Plant, MS 38960

Telephone (601) 226-4584
FAX (601) 226-4588

RECEIVED
FEB 18 1999
Dept. of Environmental Quality
Office of Pollution Control

February 16, 1999

Certified Mail: Z 538 934 772

Mr. Lance Puckett
MS Department of Environmental Quality
P. O. Box 10385
Jackson, MS 39289-0385

Dear Mr. Puckett:

Enclosed you will find a copy of the January 1999 Discharge Monitoring Report for Koppers Industries, Inc. located in Tie Plant, MS. There were no violations during the reporting period.

If you have any questions, please call 601-226-4584.

Sincerely,

Anthony A. Mayhan

Anthony A. Mayhan
Environmental and Safety Supervisor

?

KOPPERS INDUSTRIES

Koppers Industries, Inc.
P.O. Box 160
Tie Plant, MS 38960

Telephone: (601) 226-4584
FAX: (601) 226-4588

January 26, 1999

CERTIFIED MAIL Z 538 934 770

RECEIVED
JAN 27 1999
Dept. of Environmental Quality
Office of Pollution Control

Mr. Lance Puckett
Mississippi Dept. of Environmental Quality
P.O. Box 10385
Jackson, MS 39289-0385

Dear Mr. Puckett:

Enclosed you will find a copy of the December 1998 Discharge Monitoring Report for Koppers Industries, Inc. located in Tie Plant, MS. There were no violations during the reporting period.

If you have any questions please call 601-226-4584.

Sincerely,

Anthony A. Mayhan

Anthony A. Mayhan
Environmental and Safety Supervisor

KOPPERS INDUSTRIES

Koppers Industries, Inc.
P.O. Box 160
Tie Plant, MS 38960

Telephone: (601) 226-4584
FAX: (601) 226-4588

December 22, 1998

RECEIVED
DEC 28 1998
Dept. of Environmental Quality
Office of Pollution Control

CERTIFIED MAIL Z 538 934 766

Mr. Lance Puckett
Mississippi Dept. of Environmental Quality
P.O. Box 10385
Jackson, MS 39289-0385

Dear Mr. Puckett:

Enclosed you will find a copy of the November 1998 Discharge Monitoring Report for Koppers Industries, Inc. located in Tie Plant, MS. There were no violations during the reporting period.

If you have any questions please call 601-226-4584 ext.22.

Sincerely,

James Hatch

James Hatch
Assistant Plant Manager

Grenada

File

KOPPERS INDUSTRIES

Koppers Industries, Inc.
P.O. Box 160
Tie Plant, MS 38960

Telephone: (601) 226-4584
FAX: (601) 226-4588

MSP0 90300

November 17, 1998

RECEIVED
NOV 19 1998
Dept. of Environmental Quality
Office of Pollution Control

CERTIFIED MAIL Z 538 934 761

Mr. Lance Puckett
Mississippi Dept. of Environmental Quality
P.O. Box 10385
Jackson, MS 39289-0385

Dear Mr. Puckett:

Enclosed you will find a copy of the October 1998 Discharge Monitoring Report for Koppers Industries, Inc. located in Tie Plant, MS. There were no violations during the reporting period.

If you have any questions please call 601-226-4584 ext.22.

Sincerely,

James Hatch

James Hatch
Assistant Plant Manager

KOPPERS INDUSTRIES

Koppers Industries, Inc.
P.O. Box 160
Tie Plant, MS 38960

Telephone: (601) 226-4584
FAX: (601) 226-4588

October 26, 1998

RECEIVED
OCT 28 1998
Dept. of Environmental Quality
Office of Pollution Control

CERTIFIED MAIL P 582 396 512

Mr. Lance Puckett
Mississippi Dept. of Environmental Quality
P.O. Box 10385
Jackson, MS 39289-0385

Dear Mr. Puckett:

Enclosed you will find a copy of the DMR for September 1998 for Koppers Industries, Inc. located in Tie Plant, MS. There were no violations during the reporting period.

If you have any questions please call 601-226-4584 ext.22.

Sincerely,

James Hatch

James Hatch
Assistant Plant Manager

FILE COPY

MISSISSIPPI DEPARTMENT OF ENVIRONMENTAL QUALITY

James I. Palmer, Jr., Executive Director

October 21, 1998

Mr. Robert S. Markwell
Environmental Engineer
Beazer East, Inc.
One Oxford Centre, Suite 3000
Pittsburgh, PA 15219-6401

Re: Post-Closure Permit Renewal Application Notice of Deficiency
Koppers Industries, Inc.
Grenada, Ms
MSD 007 027 543

Dear Mr. Markwell:

The Mississippi Department of Environmental Quality has reviewed your response to the Notice of Deficiency.

The following comments are in reference to your response.

Comment #1

Beazer will be allowed to use the statistical methods submitted to this office in the Part B Application. As required by MHWMR 264.97(g)(1) and MHWMR 264.98(d) Beazer will be required to take a sequence of four samples, taken at an interval that assures, to the greatest extent technically feasible, that an independent sample is obtained, by reference to the uppermost aquifer's effective porosity, hydraulic conductivity, and hydraulic gradient, and the fate and transport characteristic of the potential contaminants.

However, in Appendix E-6 Statistical Methods, Selection of Statistical Method Part IV.E. and IV.F. Beazer will be required to use the MDEQ policy.

OFFICE OF POLLUTION CONTROL
P.O. Box 10385 Jackson, MS 39289.0385 Phone 601.961.5171 Fax 601.354.6612

Comment #2

Beazer has requested that detection monitoring be terminated if it is demonstrated that the groundwater quality downgradient of the closed surface impoundment has not exceed background quality for a period of three consecutive years. MHWMR 264.117(a)(2)(i) states that the Regional Administrator may shorten the post-closure care period for the hazardous waste unit if it is found that the unit is closed, and if he (Regional Administrator) finds that the reduced period is sufficient to protect human health and the environment. There is no basis for the termination of detection monitoring if they have not exceeded background quality for a period of three consecutive years.

Beazer will not be allowed to terminate Detection Monitoring as proposed above.

Please submit the appropriate revisions by November 21, 1998 If you have any questions please contact me at (601) 961-5308.

Sincerely,

C. Wayne Stover, Jr.

C. Wayne Stover, Jr.
Environmental Permits Division

cc: Russ McLean, Region IV, EPA

FILE COPY

MISSISSIPPI DEPARTMENT OF ENVIRONMENTAL QUALITY

James I. Palmer, Jr., Executive Director

September 29, 1998

Mr. Thomas Henderson, Plant Manager
Koppers Industries
P.O. Box 160
Tie Plant, Mississippi 38960

Re: Pretreatment Permit No. - MSP090300
Grenada County

Dear Mr. Henderson:

After careful review of your Discharge Monitoring Report for July 1998, the following violations were noted:

Month	Parameter	Permit Conditions	Reported Value	Deviation
July, 1998	Pentachlorophenol	0.18 mg/l (Monthly Average)	1.17 mg/l	550%
July, 1998	Pentachlorophenol	0.36 mg/l (Daily Maximum)	2.9 mg/l	705%

Your letter of July 29, 1998 addresses the probable cause of these violations and the proposed remedial actions to assure future compliance with permit conditions. You are reminded that further noncompliance may result in enforcement and penalties.

If you have any questions concerning this matter, please advise.

Sincerely,

Russ Twitty, P.E.
Compliance Division

cc: Jo Sharp, OPC

OFFICE OF POLLUTION CONTROL
P.O. Box 10385 Jackson, MS 39289.0385 Phone 601.961.5171 Fax 601.354.6612

File - Permitting
Correspondence

KOPPERS INDUSTRIES

Koppers Industries, Inc.
P.O. Box 160
Tie Plant, MS 38960

Telephone: (601) 226-4584
FAX: (601) 226-4588

September 25, 1998

RECEIVED
SEP 28 1998
Dept. of Environmental Quality
Office of Pollution Control

Mr. Lance Puckett
Mississippi Dept. of Environmental Quality
P.O. Box 10385
Jackson, MS 39289-0385

Dear Mr. Puckett:

Enclosed you will find a copy of the DMR for August 1998 for Koppers Industries, Inc. located in Tie Plant, MS. No water was discharged until August 12, 1998.

The wastewater treatment plant is continuing to operate properly. If you have any questions please call 601-226-4584 ext.22.

Sincerely,

James Hatch

James Hatch
Assistant Plant Manager

KOPPERS INDUSTRIES

Koppers Industries, Inc.
P.O. Box 160
Tie Plant, MS 38960

Telephone: (601) 226-4584
FAX: (601) 226-4588

August 27, 1998

RECEIVED
AUG 28 1998
Dept. of Environmental Quality

Mr. Lance Puckett
Mississippi Dept. of Environmental Quality
Office of Pollution Control
P.O. Box 10385
Jackson, MS 39289-0385

Dear Mr. Puckett:

Enclosed you will find a copy of the DMR for July 1998 for Koppers Industries, Inc. located in Tie Plant, MS. You will also find a copy of the letter to Russ Twitty notifying him of the permit violations. The results from July 27 are included in this report. However, no water was discharged until August 12, 1998.

The wastewater treatment plant is back on line and operating properly.If you have any questions please call 601-226-4584 ext.22.

Sincerely,

James Hatch

James Hatch
Assistant Plant Manager

KOPPERS
INDUSTRIES

Koppers Industries, Inc.
P.O. Box 160
Tie Plant, MS 38960

Telephone: (601) 226-4584
FAX: (601) 226-4588

July 29, 1998

Mr. Russ Twitty
Mississippi Dept. of Environmental Quality
Office of Pollution Control
P.O. Box 10385
Jackson, MS 39289-0385

Dear Mr. Twitty:

On the afternoon of July 23, 1998, we received analytical results from Environmental Diagnostic Laboratories indicating that the pentachlorophenol (penta) concentration for a sample collected from our wastewater treatment facility on July 14, 1998 was at 1.03 mg/l. Our daily maximum concentration is .36 mg/l. The quantity discharged was .06013 lbs/day of penta. The daily maximum is .105 lbs/day.

After verification with EDL, the wastewater facility was shut down and the city discharge valve was closed. EDL also informed us that the sample from July 21 was .72 mg/l of pentachlorophenol. The quantity discharged was .08166 lbs/day. Another sample was immediately taken and sent overnight to EDL for analysis.

Brian Collins with Mississippi DEQ was contacted at 8 a.m. July 24, 1998 and informed of the situation.

EDL reported .986 mg/l of penta from the sample of July 23. The quantity discharged was .0362 lbs/day.

On Friday afternoon, July 24,1998, we attempted to re-circulate the wastewater through our system. On Monday, July 27, we discovered that the valve going to the city had failed and that 43,500 gals of water was discharged to the city over the three-day period.

Russ Twitty, with Mississippi DEQ, was notified on July 27, 1998 of our findings.

We believe our initial problem started with a defective mixer in our flock tank. The mixer has been repaired and is operating properly. The valve discharging to the city has also been replaced. After closer inspection, we discovered a ¾ inch nut jammed in the valve, which prevented the valve from completely closing.

We will continue to re-circulate the wastewater until acceptable levels attained.

If you have any questions please call 601-226-4584 ext.22.

Sincerely,

Thomas L. Henderson
Plant Manager

KOPPERS INDUSTRIES

Koppers Industries, Inc.
P.O. Box 160
Tie Plant, MS 38960

Telephone: (601) 226-4584
FAX: (601) 226-4588

RECEIVED
JUL 30 1998

July 29, 1998

Mr. Russ Twitty
Mississippi Dept. of Environmental Quality
Office of Pollution Control
P.O. Box 10385
Jackson, MS 39289-0385

Dear Mr. Twitty:

On the afternoon of July 23, 1998, we received analytical results from Environmental Diagnostic Laboratories indicating that the pentachlorophenol (penta) concentration for a sample collected from our wastewater treatment facility on July 14, 1998 was at 1.03 mg/l. Our daily maximum concentration is .36 mg/l. The quantity discharged was .06013 lbs/day of penta. The daily maximum is .105 lbs/day.

After verification with EDL, the wastewater facility was shut down and the city discharge valve was closed. EDL also informed us that the sample from July 21 was .72 mg/l of pentachlorophenol. The quantity discharged was .08166 lbs/day. Another sample was immediately taken and sent overnight to EDL for analysis.

Brian Collins with Mississippi DEQ was contacted at 8 a.m. July 24, 1998 and informed of the situation.

EDL reported .986 mg/l of penta from the sample of July 23. The quantity discharged was .0362 lbs/day.

On Friday afternoon, July 24,1998, we attempted to re-circulate the wastewater through our system. On Monday, July 27, we discovered that the valve going to the city had failed and that 43,500 gals of water was discharged to the city over the three-day period.

Russ Twitty, with Mississippi DEQ, was notified on July 27, 1998 of our findings.

We believe our initial problem started with a defective mixer in our flock tank. The mixer has been repaired and is operating properly. The valve discharging to the city has also been replaced. After closer inspection, we discovered a ¾ inch nut jammed in the valve, which prevented the valve from completely closing.

We will continue to re-circulate the wastewater until acceptable levels attained.

If you have any questions please call 601-226-4584 ext.22.

Sincerely,

Thomas L. Henderson
Plant Manager

KOPPERS INDUSTRIES

Koppers Industries, Inc.
P.O. Box 160
Tie Plant, MS 38960

Telephone: (601) 226-4584
FAX: (601) 226-4588

July 24, 1998

RECEIVED
JUL 29 1998
Dept. of Environmental Quality
Office of Pollution Control

CERTIFIED MAIL P 582 396 513

Mr. Lance Puckett
Mississippi Dept. of Environmental Quality
Office of Pollution Control
P.O. Box 10385
Jackson, MS 39289-0385

Dear Mr. Puckett:

Enclosed you will find a copy of the DMR for June 1998 for Koppers Industries, Inc. located in Tie Plant, MS. There were no violations to report.

If you have any questions please call 601-226-4584 ext.22.

Sincerely,

James Hatch

James Hatch
Assistant Plant Manager

FILE COPY

MISSISSIPPI DEPARTMENT OF ENVIRONMENTAL QUALITY

James I. Palmer, Jr., Executive Director

July 13, 1998

Mr. Thomas Henderson, Plant Manager
Koppers Industries, Inc.
P.O. Box 160
Grenada, MS 38960

Re: Pretreatment Permit No. MSP090300

Dear Mr. Henderson:

Enclosed is a copy of the Compliance Evaluation Inspection Report that was performed at Koppers Industries on July 9, 1998. The results of this inspection should be used by you as a guide for complying with requirements found in your Pretreatment permit.

If you have any questions concerning this matter, please contact us at 961-5171.

Sincerely,

Russ Twitty, P.E.
Compliance Division

Enclosure
cc: Ms. Jo Sharp (w/enclosure)

OFFICE OF POLLUTION CONTROL
P.O. Box 10385 Jackson, MS 39289.0385 Phone 601.961.5171 Fax 601.354.6612

KOPPERS INDUSTRIES

Koppers Industries, Inc.
P.O. Box 160
Tie Plant, MS 38960

Telephone: (601) 226-4584
FAX: (601) 226-4588

To: Lance Puckett
Mississippi Dept. of Environmental Quality
Office of Pollution Control
P.O. Box 10385
Jackson, Ms 39289-0385

From: Thomas L. Henderson
Koppers Industries Inc.,
P.O. Box 160
Tie Plant, Ms 38960

RE: DMR for Koppers Ind. Inc. Tie Plant, Ms facility
Permit # MSP090300

Date: 5/22/1998

Mr. Puckett,

Enclosed you will find a copy of the April 1998 DMR for the Koppers Ind. Inc. plant in Tie Plant Ms. There were no excedences or violations to report.

If you have any questions please call 601-226- 4584 x-11.

Thank you,

Thomas L. Henderson

Cc: Tom Duplessis - KII Pittsburgh

KOPPERS INDUSTRIES

Grenada
MSP090300

Koppers Industries, Inc.
P.O. Box 160
Tie Plant, MS 38960

Telephone: (601) 226-4584
FAX: (601) 226-4588

RECEIVED
JUN 26 1998
Dept. of Environmental Quality
Office of Pollution Control

CERTIFIED MAIL P 582 396 515

Mr. Lance Puckett
Mississippi Dept. of Environmental Quality
Office of Pollution Control
P.O. Box 10385
Jackson, MS 39289-0385

Dear Mr. Puckett:

Enclosed you will find a copy of the DMR for May 1998 for Koppers Industries, Inc. located in Tie Plant, MS. There were no violations to report.

You will also find the revised report for April 1998. We discovered an error in our computer program for calculating the loading values for pentachlorophenol and phenols.

If you have any questions please call 601-229-4584 ext.22.

Sincerely,

James Hatch

James Hatch
Assistant Plant Manager

STATE OF MISSISSIPPI
DEPARTMENT OF ENVIRONMENTAL QUALITY
JAMES I. PALMER, JR.
EXECUTIVE DIRECTOR

To: Tracy Tomkins
From: Clift Jeter, NRO
Date: December 5, 1997

Subject: Compliance Monitoring
Koppers, Inc. - # 90300
Grenada County

On December 1 and 2, 1997, I traveled to the above site to perform scheduled compliance monitoring. I met with Mr. Thomas Henderson, plant manager. The process water was checked at this outfall.

Samples were collected for BOD,SS, Oil&Grease, Metals and Phenols. The pH was 7.94 and a flow of .015 mgd. The water was brown tinted with slight odor present. There were no problems on this date and everything appeared to be working properly.

If I can be of further assistance please call.

RCJ:cj

PT File
Grenada

KOPPERS INDUSTRIES

Koppers Industries, Inc.
P.O. Box 160
Tie Plant, MS 38960

Telephone: (601) 226-4584
FAX: (601) 226-4588

September 25, 1997

TAT

Mr. ~~Lance~~ Puckett
Department of Environmental Quality
Industrial Pretreatment Section
P.O Box 10385
Jackson, MS 39289

RECEIVED
SEP 29 1997
Dept. of Environmental Quality
Office of Pollution Control

Dear Mr. Puckett:

Re: Pretreatment Permit No.MSP090300

Our BOD sample for the week of August 5 , 1997 was invalid due to a laboratory error. The entire batch of BOD samples analyzed by Environmental Diagnostic Laboratories showed excessive oxygen depletion, thus invalidating the data.

If you have any further questions please contact me at your convenience.

Sincerely,

Thomas L. Henderson

Thomas L. Henderson
Plant Manger

cc: Clovis Tillman - City of Grenada
Steve Smith

KOPPERS INDUSTRIES

Koppers Industries, Inc.
P.O. Box 160
Tie Plant, MS 38960

Telephone: (601) 226-4584
FAX: (601) 226-4588

E GRENADA

March 6, 1997

RECEIVED
MAR 3 1 1997
Dept. of Environmental Quality
Office of Pollution Control

Mr. Lance Puckett
Department of Environmental Quality
Industrial Pretreatment Section
P.O Box 10385
Jackson, MS 39289

Dear Mr. Puckett:

Re: Pretreatment Permit No.MSP090300

Our sample for the week of February 25, 1997 indicated a pentachlorophenol level of .475 mg/l. Our permit limit is .36 mg/l.

If you have any further questions please contact me at your convenience.

Sincerely,

Thomas L. Henderson

Thomas L. Henderson
Plant Manager

cc: Clovis Tillman - City of Grenada
Steve Smith

KOPPERS INDUSTRIES

Koppers Industries, Inc.
P.O. Box 160
Tie Plant, MS 38960

Telephone: (601) 226-4584
FAX: (601) 226-4588

RECEIVED
MAR 10 1997
Dept. of Environmental Quality
Office of Pollution Control

March 6, 1997

Mr. Lance Puckett
Department of Environmental Quality
Industrial Pretreatment Section
P.O Box 10385
Jackson, MS 39289

Dear Mr. Puckett: LAP

Re: Pretreatment Permit No.MSP090300

Our sample for the week of February 25, 1997 indicated a pentachlorophenol level of .475 mg/l. Our permit limit is .36 mg/l.

If you have any further questions please contact me at your convenience.

Sincerely,

Thomas L. Henderson

Thomas L. Henderson
Plant Manger

cc: Clovis Tillman - City of Grenada
Steve Smith

FILE COPY

hdp 2/20/97

INTAKE SHEET FOR REQUEST FOR ACCESS TO PUBLIC RECORDS

DATE: February 20, 1997

NAME: Jeffrey J. DeWert TELEPHONE #: 847-843-1219

COMPANY: EnviroNet Inc.

ADDRESS: 1860 Hintington Blvd., Suite A
Hoffman Estates IL 60195

FILES BEING REVIEWED

1. FACILITY: Koppers
   COUNTY: Grenada DIVISION: Air (0960-00012)

2. FACILITY: Koppers
   COUNTY: Grenada DIVISION: HW - MSD007027543 (RCRA/TSD/UNC/SUPER-D. Peacock)

3. FACILITY: Koppers
   COUNTY: Grenada DIVISION: Water - MSR220005, MS0000604, MSP090300 (Need All Files, including archived/closed files)

4. FACILITY: Koppers
   COUNTY: Grenada DIVISION: UST (8363)

5. FACILITY:
   COUNTY: DIVISION:

APPOINTMENT DATE AND TIME: February 25, 1997 @ 9:00 a.m.

*****THIS IS NOT A BILL, INVOICE WILL FOLLOW WITHIN 10 DAYS*****

BILLING INFORMATION

NO. OF COPIES MADE: @ $.25 =

NOTE: NO CHARGE FOR COPIES UNDER 50

DISKETTE:

TOTAL AMOUNT DUE: $

COMMENTS:

PUBLIC RECORDS ADMINISTRATOR:
BETTY SMITH

Betty Smith

BILL ORGANIZATION:
PERSON REVIEWING FILES:

_____

FILE GRENADA

STATE OF MISSISSIPPI
DEPARTMENT OF ENVIRONMENTAL QUALITY
JAMES I. PALMER, JR.
EXECUTIVE DIRECTOR

To: ~~Brian Collins~~ CAP
From: Clift Jeter, NRO
Date: January 22, 1997

Subject: Compliance Monitoring
Koppers Industries # 90300
Grenada County

On January 21 and 22, 1997, I traveled to the above site to perform scheduled compliance monitoring. I met with Mr. Mike Sylvester, Plant Environmental Engineer, at the site.

A composite sampler was placed on the process wastewater effluent and samples taken for BOD,SS,Cu,Cr and As. Grab samples were taken for Phenols, Pentachlorophenol and Oil & Grease. The samples were brown tinted with no apparent odor. The pH of the water was 7.16 with a flow of .011 mgd.

No problems were noted during our inspection of the facility. If we can be of further assistance please call.

RCJ:cj

FILE: GRENADA

STATE OF MISSISSIPPI
DEPARTMENT OF ENVIRONMENTAL QUALITY
JAMES I. PALMER, JR.
EXECUTIVE DIRECTOR

FILE COPY

June 25, 1996

Mr. Tommy Henderson
Koppers Industries, Inc.
P. O. Box 160
Tie Plant, Mississippi 38960

Dear Mr. Henderson:

Re: Permit No. MSP090300

Enclosed is a copy of the Compliance Evaluation Inspection Report completed as a result of this office's inspection at Koppers Industries, Inc., on June 10, 1996. The report should be used by you as a guide for complying with requirements and limitations stated in your pretreatment permit.

See the enclosed report.

If you have any questions concerning this matter, please contact us at 961-5171.

Respectfully,

Bryan D. Collins, P. E.
Industrial Pretreatment Section

BDC:hdp:
Enclosures
cc: Mr. Paul Zetterholm (w/attachment)

M&C

KOPPERS INDUSTRIES

FILE GRENADA

Koppers Industries, Inc.
436 Seventh Avenue
Pittsburgh, PA 15219-1800

William R. Donley
Vice President and General Manager
Utility and Construction Products

Telephone: (412) 227-2724
Fax: (412) 227-2328

June 19, 1996

RECEIVED
JUN 24 1996
Dept. of Environmental Quality
Office of Pollution Control

Mississippi Department of Env. Quality
Bureau of Pollution Control
P. O. Box 10385
Jackson, MS 39289-0385

Attn: Bryan Collins

Re: MSD #007-027-543

Dear Mr. Collins:

As information, Ronald P. Murphey resigned as plant manager of the Grenada, MS Koppers Industries plant on March 9, 1996.

Thomas L. Henderson was named the new plant manager. Tom was the general yard foreman for the past several years and he looks forward to working with you on future endeavors. If we can be of any assistance, please do not hesitate to call.

Sincerely,

W. R. Donley

cc: Tom Henderson - Grenada

KOPPERS INDUSTRIES

Koppers Industries, Inc.
P.O. Box 160
Tie Plant, MS 38960

Telephone: (601) 226-4584
FAX: (601) 226-4588

RECEIVED
JUN 18 1996
Dept. of Environmental Quality
Office of Pollution Control

June 17, 1996

Mr. Lance Puckett
Department of Environmental Quality
Industrial Pretreatment Section
P.O Box 10385
Jackson, MS 39289

Dear Mr. Puckett:

Re: Pretreatment Permit No.MSP090300
January Flow Reporting

The average monthly flow in January was .017 MGD. This value was not reported on the DMR. January was the first month this value was required to be reported and it was overlooked when the DMR was completed.

If you have any further questions please contact me at your convenience.

Sincerely,

Thomas L. Henderson

Thomas L. Henderson
Plant Manger

Grenada

STATE OF MISSISSIPPI
DEPARTMENT OF ENVIRONMENTAL QUALITY
JAMES I. PALMER, JR.
EXECUTIVE DIRECTOR

June 6, 1996

FILE COPY

Mr. Ronald Murphey
Koppers Industries, Inc.
Post Office Box 160
Tie Plant, MS 38960

Dear Mr. Murphey:

Re: Pretreatment Permit No. MSP090300
Discharge Monitoring Reports

After careful review of your discharge monitoring reports for the previous reporting period, the following violations were noted:

Month	Parameter	Permit Conditions	Reported Value
January 1996	FLOW	Monthly Avg	No Value

Please advise us within ten (10) days following receipt of this letter of the probable cause of these violations and any remedial actions taken to assure future compliance with permit conditions.

If you have any questions concerning this matter, please advise.

Respectfully,

Lance Puckett
Industrial Pretreatment Section

LP:vlt

File Grenada

STATE OF MISSISSIPPI
DEPARTMENT OF ENVIRONMENTAL QUALITY
JAMES I. PALMER, JR.
EXECUTIVE DIRECTOR

FILE COPY

June 14, 1996

Mr. Ron Murphey
Koppers Industries, Inc.
Post Office Box 160
Tie Plant, MS 38960

Dear Mr. Murphey:

Re: MSP090300
Compliance Sampling

Enclosed is a copy of the analytical laboratory results on samples taken at Koppers Industries, Inc. on January 17, 1996. You may use these results in determining your compliance status.

If you have any questions or if we can be of assistance, please advise.

Respectfully,

Joel Myers
Industrial Pretreatment Section

JM:vlt
Enclosure
cc: Ms. Nona Yates, DEQ/OPC (w/enclosure)

Environmental
Diagnostic Laboratories, Inc.

P. O. Box 15098 • Hattiesburg, MS 39404
Office: 601-264-2222 • Fax: 601-268-2030

February 19, 1996

Mr. Mike Sylvester
Koppers Industries
P.O. Box 160
Tie Plant, MS 38960

RECEIVED
FEB 21 1996

Koppers Industries, Incorporated - Permit No. MSP90300

Dear Mr. Sylvester:

Biochemical Oxygen Demand (BOD) data for the Outfall sampling for the week of February 5, 1996, must be considered as out of compliance. This is no fault of Koppers Industries. You have stated the samples were collected by Koppers Industries personnel as normal and prepared for shipment to Environmental Diagnostic Laboratories, Inc (EDL). As per our conversation of February 9, 1996, Sunbelt Couriers picked the samples up and promised delivery to the lab no later than Saturday, February 10, 1996. Unfortunately, Sunbelt did not deliver the samples until Monday morning. Since EPA guidelines require no more than 48 hours between sample collection and initiation of analysis, this BOD was 18 hours out of hold time when the analysis started.

Sunbelt Couriers have been notified and have taken action to ensure that this will not reoccur.

We at EDL take pride in our ability to provide quality services to our customers. We expect no less from our suppliers. We regret any inconvenience this incident may have caused.

Sincerely,

J. Paul Hollomon, Ph.D.
Laboratory Manager

FILE COPY

CONTINGENCY, SPCC, AND POLLUTION PREVENTION PLAN

KOPPERS INDUSTRIES, INC.

GRENADA PLANT

TIE PLANT, MS

CONTINGENCY, SPILL PREVENTION,
CONTROL AND COUNTERMEASURES (SPCC)
AND
POLLUTION PREVENTION PLAN
KOPPERS INDUSTRIES, INC.
GRENADA PLANT
TIE PLANT, MS
May 16, 2000

CERTIFICATION

I hereby certify that I have inspected the subject facility and being familiar with the provisions of 40 CFR 112 for SPCC requirements and 40 CFR 122 for Storm Water Pollution Prevention requirements, attest that this Plan has been prepared in accordance with good engineering practices.

Robert Willis
Willis Engineering

Date: 6/6/00

ROBERT D. WILLIS
REGISTERED PROFESSIONAL
ENGINEER
#10944
STATE OF MISSISSIPPI

MANAGEMENT APPROVAL

I certify under penalty of law that the information contained in this Plan is, to the best of my knowledge, true, accurate and complete. This Plan will be implemented as herein described.

Thomas L. Henderson
Plant Manager

Date: 6-27-2000

REVIEW AND EVALUATION OF SPCC PLAN

Review and evaluation of this plan, as described in Section 1.4, is documented below:

Signature	Title	Date

SPCC, CONTINGENCY, AND POLLUTION PREVENTION PLAN, GRENADA PLANT, KOPPERS INDUSTRIES, INC.

May 16, 2000

TABLE OF CONTENTS

1.0 INTRODUCTION 1
- 1.1 Facility Location 1
- 1.2 Operation 1
- 1.3 Coordinated Emergency Services 1
- 1.4 SPCC Plan Maintenance 2
- 1.5 SWPPP Maintenance 2

2.0 INVENTORY OF OIL AND HAZARDOUS MATERIALS 3
- 2.1 Discussion 3
- 2.2 Business Information and Identification 3
- 2.3 Emergency Contacts/Emergency Coordinators 4
- 2.4 Hazardous Materials Inventory 4

3.0 SPILL PREVENTION, CONTROL, AND COUNTERMEASURES 5
- 3.2 Past Spill Experience - 40 CFR 112.7(a) 5
- 3.3 Prediction of Flow of Spills - 40 CFR 112.7(b) 5
- 3.4 Containment and/or Diversionary Structures - 40 CFR 112.7(c) 5
- 3.5 Conformance with SPCC Standards and Guidelines - 40 CFR 112.7(e) 5
- 3.6 Inspections and Records 6
- 3.7 Security 6
- 3.8 General Plant Spill Prevention 6
- 3.9 Surface Drainages 7
- 3.10 Treating Cylinders 8
- 3.11 Tank Car and Truck Unloading 8
- 3.12 Tank Farm 8
- 3.13 Fuel and Lubricating Oil 8
- 3.14 Oil Water Separator 9
- 3.15 Biological Waste Water Treatment 9
- 3.16 Drip Pad 9
- 3.17 Hazardous Waste Storage Facility 9
- 3.18 Boiler Fuel Preparation 9
- 3.19 Planned Improvements Schedule 10

TABLE 3.1 - TANK LISTINGS 11

4.0 EMERGENCY RESPONSE PROCEDURES 12
- 4.1 General 12
- 4.2 Emergency Coordinator 12
- 4.3 Immediate Response 12
- 4.4 Response Procedures 12
- 4.5 Emergency Notifications, Reports, and Record Keeping 14
  - 4.5.2 WHAT SPILLS OR INCIDENTS MUST BE REPORTED AND TO WHOM? 15
  - 4.5.3 WHAT SPILLS ARE REPORTABLE? 16

EMERGENCY AND/OR HAZARDOUS MATERIALS INCIDENT REPORT 17
- 4.6 Available Equipment 20
- 4.7 Emergency Response Contract Services 20
- 4.8 Fire and Disaster Response Plans 21
- 4.9 Medical Emergency Plans 23

5.0 STORM WATER POLLUTION PREVENTION PLAN 24
- 5.1 General 24
- 5.2 Pollution Prevention Objectives and Process 24
- 5.3 Pollution Prevention Team 25

5.4 Description of Potential Sources 25
5.5 Measures and Controls 27
5.6 Comprehensive Site Compliance Evaluations 31
5.7 Special Requirements for EPCRA Section 313 Facilities 31
5.8 Monitoring and Reporting Requirements 32
5.9 Compliance Schedule 35
5.10 Record Keeping 35

6.0 TRAINING 36

SITE, LOCATION, AND STORM WATER MANAGEMENT PLANS ..... FIGURES

OIL POLLUTION ACT SUBSTANTIAL HARM CERTIFICATION ..... APPENDIX A

STORM WATER POLLUTION PREVENTION REPORT FORM ..... APPENDIX B

STORM WATER DISCHARGE, EVALUATION AND CERTIFICATION,
MISSISSIPPI WORKSHEET #2c ..... APPENDIX C

PROCESS EQUIPMENT INSPECTION FORM ..... APPENDIX D

1.0 INTRODUCTION

This plan has been developed to; a) provide a basis for planning for and responding to potential spills, accidents, fires, or other contingencies and b) describe and implement practices to minimize and control pollutants in storm water discharges and ensure discharge permit compliance. It includes the requirements for the Contingency Plan as required by the Resources Conservation and Recovery Act (RCRA), the Spill Prevention, Control, and Countermeasures (SPCC) Plan and Storm Water Pollution Prevention Plan (SWPPP) of the Clean Water Act, and the inventory reporting requirements of the Emergency Planning and Community Right-to-Know Act (SARA Title III).

Questions concerning this plan may be directed to:

Thomas L. Henderson	Plant Manager	(601) 226-4584
Steve Joy	Assistant Plant Mngr.	(601) 226-4584
Anthony A. Mayhan	Environ. Supervisor	(601) 226-4584

1.1 Facility Location

The Grenada Plant is located at the unincorporated town of Tie Plant, Mississippi in Grenada County approximately 1/2 mile East of U. S. Highway 51 South on the Tie Plant and Old Carrolton Road. The approximate USGS location is North 330°, 44'04", West 890°, 47'19".

1.2 Operation

The Grenada Plant processes and preserves wood products by the pressure treating process. Creosote coal tar solution and pentachlorophenol in oil are used as preservatives.

1.3 Coordinated Emergency Services

This plan is written to facilitate the quick and efficient coordination of emergency response actions between Koppers Industries Inc. (Koppers) and any emergency response companies or agencies, which may be needed. Copies of this plan, and updates, are provided to the following:

U. S. EPA Region IV
Grenada Fire Department
Tie Plant Volunteer Fire Department
Grenada Lake Medical Center
Plant Supervisors

Instructions on how and when to obtain assistance for emergency situations, including agency and contractor phone numbers, are included in section 4 of this plan.

Copies of this plan are available at the following plant locations:

Main Office
Maintenance Shop
Treating Control Room

1.4 SPCC Plan Maintenance

This Plan must be kept up to date. Notify the Environmental Program Manager in the event of any change made or needed. Review and evaluation of the SPCC plan is required every three (3) years and the plan must be amended, as necessary, within six (6) months of such review to include more effective spill prevention and control technologies. This Plan must also be amended whenever there is a change in design, construction, operation or maintenance which materially affects the facility's potential for discharge, and the amendment must be fully implemented as soon as possible and no later than within six months. Any amendment to the plan must be certification by a Professional Engineer. Evidence of the reviews and evaluations shall be recorded on the signature page.

A copy of this Plan is to be maintained in the plant's office. All changes to the Plan must be maintained in the same manner.

1.5 SWPPP Maintenance

The pollution prevention section of this plan may require revisions in addition to those described above.

1.5.1 If the SWPPP proves to be ineffective in eliminating or significantly minimizing pollutants in discharges, the plan shall be revised as necessary and changes implemented as soon as practical.

1.5.2 Following a Comprehensive Site Compliance Evaluation in which the need for changes are identified, revise the plan within 2 weeks and implement the changes within 12 weeks of the evaluation.

2.0 INVENTORY OF OIL AND HAZARDOUS MATERIALS

2.1 Discussion

Various materials are used at the Koppers facility which are considered hazardous based on the toxicity or flammability of the materials. Such materials may also be listed as Water Priority Chemicals based on their potential to impact water resources. These include preservatives that are used in the industrial processes to pressure treat wood products, unusable waste products from these processes, boiler water treatment chemicals, and fuel and lubricants for plant vehicles and equipment. Fuel and lubricants for plant vehicles and equipment are regulated as oil.

2.2 Business Information and Identification

The following information applies to the Koppers Industries Grenada Plant:

Business Name:	Koppers Industries, Inc.
Business Phone:	(601) 226-4584
Owner:	Koppers Industries, Inc. 436 Seventh Ave. Pittsburgh, PA 15219
Operator:	Same as owner.
SIC Code:	2491
EPA ID Number:	MSD007027543
NPDES Permit:	Storm Water General Permit, Wood Treater MSR 220005
Site Address:	Tie Plant & 1Koppers Dr Tie Plant, Mississippi 38960
Mail Address:	P. O. Box 160 Tie Plant, Mississippi 38960
Type of Business:	Wood Preservative Treatment

2.3 Emergency Contacts/Emergency Coordinators

Name/Address	Title	Home Phone
Thomas L. Henderson P.O. Box 115, Tillatoba, MS 38961	Plant Manager	(662) 623-7922
Steve Joy 43 Darlene CV, Grenada, MS 38901	Assistant Plant Manager	(662) 227-1608
John Cummings Rt. 1, Box 127B, Grenada, MS 38901	Maintenance Supervisor	(662) 237-9545
Lloyd Sivley 1367 Joplin St., Grenada, MS 38901	Yard Supervisor	(662) 226-1349
Anthony A. Mayhan 15 White Cove, Grenada, MS 38901	Environmental Supervisor	(662) 226-8368

The above people can normally be reached during work hours at the business phone number, (601) 226-4584. Additionally, the night shift operator can be reached at (601) 226-4585. Phone numbers for Koppers Industries Corporate Contacts are provided on Page 16.

The plant manager is the Primary Emergency Coordinator (EC) and should be contacted first. If he is not available, the others should be called, in the order listed, until someone is reached. The Primary Emergency Coordinator and alternates have complete authority to commit all necessary resources of the company in the event of an emergency.

During off shifts, holidays, and weekends, the shift foreman will be the acting Emergency Coordinator. As acting EC, he will take actions necessary for the immediate response to an emergency, including notification of one of the above persons, calling for emergency response services, and mobilizing plant personnel and equipment to respond to the incident. The Emergency Coordinator, above, will assume responsibility for implementation upon his arrival at the plant.

2.4 Hazardous Materials Inventory

The primary hazardous materials which are used or stored on the Koppers site are listed by tank in Table 3.1, Tank Listings Table. The tanks and facilities are shown on the site map by number or name.

Additionally, drums of hazardous waste may be stored in the Hazardous Waste Storage Facility for up to 90 days. This facility is a metal building with concrete floor and curb. Up to a maximum of 640 drums of wastes from the on-site creosote and pentachlorophenol wood-preserving processes may be stored prior to off-site disposal.

3.0 SPILL PREVENTION, CONTROL, AND COUNTERMEASURES

3.1 Description

This section of the Plan provides information specific to the storage and handling of oil and hazardous materials, spill prevention and containment equipment, and countermeasures to be implemented to control the impact of a spill. Recognizing that the requirement to prepare a SPCC plan, per 40 CFR 112, is only required for facilities which handle and/or store oil, KII has chosen to use this format to cover both oil and hazardous materials at our plants. This section generally follows the format for SPCC plans, modified as appropriate to include hazardous materials.

3.2 Past Spill Experience - 40 CFR 112.7(a)

Although occasional reportable spills of hazardous materials have occurred and been reported, no oil spills, as defined by 40 CFR 110 (See 4.5.3(b)), have occurred at this facility. A record of all reported spill events is maintained in the plant operating record.

3.3 Prediction of Flow of Spills - 40 CFR 112.7(b)

All process tanks containing oil or hazardous materials have been provided with secondary containment. That containment, except as noted, can only be emptied by operation of pumps which use dedicated piping to receiving wastewater tanks. It is unlikely that any event could cause significant quantities of material to be released to waters of the U. S. If such event did occur, the spilled material would follow the drainage courses, which also include spill control capabilities, as shown on the Storm Water Plan.

The quantities of materials listed for tank capacities in the Tank Listing Table, Table 3.1, represent the maximum quantities, which could potentially be released. Locations can be found for processes and tanks on the site map. The rate of flow would depend on the incident.

A drain valve is provided for the diesel fuel tank secondary containment. Water is only drained from this containment following visual inspection to assure that the water does not contain any oil and is only done by the plant Environmental Supervisor or a person reporting to him. If the water contains oil, it is transferred to the waste water system.

3.4 Containment and/or Diversionary Structures - 40 CFR 112.7(c)

This facility meets the requirements for containment and/or diversionary structures or equipment to prevent discharged oil or hazardous substances from reaching navigable waters. This is accomplished by providing a system of curbs, dikes, and secondary containment for all major tanks and process equipment and with backup of dikes with emergency shut-off gates within drainage. Rainwater from containment areas is automatically pumped to and treated with the process wastewater. Wastewater surge tanks have capacity large enough to handle the full volume of any one-process tank. Process area containments do not have drain valves and, therefore, could not allow a spill or release.

3.5 Conformance with SPCC Standards and Guidelines - 40 CFR 112.7(e)

A discussion of this facility's compliance with the applicable SPCC guidelines is provided in the following paragraphs. These first deal with general or facility wide issues and then with process or

equipment specific issues. Last, a schedule of improvements which are planned to enhance spill prevention is provided. Training of personnel is covered is Section 6.

The plant manager is the person accountable for spill prevention.

3.6 Inspections and Records

The operational areas in the Treating Department are checked regularly, normally every hour, by the operator on duty throughout each shift. The preservative pipes, valves, process equipment, tanks and treating cylinders are routinely checked by the treating operator on duty. Any problems or unusual circumstances which can not be immediately resolved are reported to the Supervisor.

Formal inspections of the tanks, treating cylinders, and piping systems for signs of leaks, deterioration or unsafe conditions are made weekly as part of the Plant Facility Inspection. A copy of this inspection form is included in Appendix D. Completed inspection forms are maintained in the plant Operating Record.

Additionally, whenever tanks are emptied and cleaned, a complete internal inspection will be made. Non-destructive shell thickness testing will be conducted periodically for tanks and piping, as needed. These additional inspections will be recorded in the Plant Operating Record.

Additional security provisions are provided for the RCRA facilities. The Closed Surface Impoundment is enclosed within fenced area. Gates are kept locked when not in use. Signs are posted at entrances to RCRA facilities stating, "Danger - Unauthorized Personnel Keep Out."

Any leaks or deficiencies identified by the above inspections will be corrected promptly.

3.7 Security

The plant normally operates 24 hours a day, 7 days a week and will have at least one employee present. Process areas of the plant where oil or hazardous substances are stored are well lighted. Roads leading into the plant are secured with gates, which are closed whenever the plant is not occupied. The plant is bordered by other industrial or agricultural properties, railroad right-of-way, and some residential area. Most of this border is not fenced. Experience indicates that trespassing is not a problem at this location.

Design features of the plant minimize the threat of release that could be caused by a trespasser. Process tank valves are connected to process pipes connected to other tanks, making release from unauthorized opening unlikely. There are no drain valves on work tanks, so it would be difficult for trespasser to cause a release. Some tanks have sample valves which could be opened, but due to their small size, the existing containment system could easily handle the material.

At times when the plant is not in operation and is unattended, the following security procedures apply:

- Treating room doors will be locked, which restricts access to valve headers.
- Cylinder doors are shut, with hydraulic controls turned off.
- Plant gates are closed and locked.

3.8 General Plant Spill Prevention

A hazardous material spill can occur any place, any time. All employees must be prepared to respond immediately to control damage and to notify management. Containing a spill to the smallest area possible is the first step. Containment can quickly be constructed using available equipment and supplies; usually by placing dirt, sand, or sawdust around the lower side of a spill with Koppers loaders. If possible, a spill should be prevented from reaching the surface water drainage, where it will spread more rapidly and have greater environmental and health impact.

Spills are more likely to occur when delivery trucks are unloading into Koppers tanks. Unloading operations should be supervised by employees familiar with the process equipment involved. Buckets or pans should be placed under hose connections to collect drips. Be prepared for hoses and pipes to be full and for liquid to be behind valves. Properly and promptly cleanup any drips or spills. Supervisors must be notified of any spills which are outside of containments. Oil, creosote, and other hazardous material deliveries are made by vehicles complying with DOT spill control regulations. Unloading is supervised by plant operators.

Maintenance, repair and plant modification projects also present a potential for causing spills since work often involves pipes and equipment which cannot be fully stripped of liquids. Workers must plan ahead and expect liquid whenever opening the pipe systems. Collection pans should first be readily available. Collected material must be returned to the processes or be properly containerized for disposal.

Only materials compatible with the stored/processed material will be used for tanks, equipment, and piping. Secondary containment is sufficiently impervious and of capacity to contain the largest tank in each tank area plus allow sufficient freeboard for precipitation. Pipe supports are designed to minimize abrasion and corrosion and allow for expansion and contraction. Above ground piping is located where damage by vehicles is unlikely or it is protected from damage by traffic barricades and/or warning signs.

In order to assure that leaks in steam coils in contact with preservative or oil do not result in a release, waste water permit violation, or boiler damage, condensate return is monitored for clarity by a meter. Excess turbidity will cause an alarm and will shut off the supply of condensate return to the boiler.

Portable tanks are not normally used. However, if needed, portable tanks will be positioned to prevent spills to navigable waters, provide secondary containment, and not be subject to flooding.

Out of service pipelines will be clearly identified and will be sealed with caps or blank-flanges until they are permanently removed.

3.9 Surface Drainage's

Koppers plant surface areas drain toward the Bogue Creek that goes to the Yalobusha River. Most of the process area first drains into either of three drainage ditches before draining to the River. Equipment, including secondary spill containment, has been installed and procedures implemented to prevent oil or hazardous materials from reaching the river. A spill is most likely to occur in the process area and, if not contained, would drain into the ditch.

In the case of a spill or event in which hazardous materials or oil does reach or has the potential to reach either or both of the drainage ditches, immediate action must be taken to contain the spill. Temporary earth dams should be constructed using plant equipment along the ditches, creating a series of impoundments to contain the flow. Sorbent booms may be used to remove containments from the water held behind the dams, if needed.

These dams can only hold back a limited amount of water, so emergency help should be contacted at the first sign that such a spill has occurred or may occur.

If a spill occurs into the cooling water pond, try to contain it there. The cooling pond overflows to the #4 storm water pond, at which a spill could also be contained.

3.10 Treating Cylinders

There are 5 treating cylinders located in one common concrete containment area. Cylinders 2, 3, and 4 are used for creosote treatment, cylinders 1 and 5 are+ used for penta-in-oil treatment. The largest cylinder capacity is 34,000 gallons. The containment capacity is approximately 56,000 gallons.

The treating processes consist of the cylinders, a work tank, vacuum system, and transfer and pressure pumps for each cylinder, and common storage tanks, waste water collection system, condensate tank, tank car and truck unloading, and oil water separation. Most of this associated equipment and piping is within concrete containment as described below.

3.11 Tank Car and Truck Unloading

Trucks and tank cars are unloaded at the Unloading Station, which is concrete lined for spill containment. All process transfer pipelines are all above ground. The primary potential spill sources in the creosote process include leaks from the process tanks, valves, pumps, and pipe systems. These leaks can best be prevented by proper valve and pump maintenance and equipment inspection during creosote transfers. Any leaks or drips must be cleaned up immediately.

Any rainwater which is collected in the containments is pumped to the wastewater treatment system for treatment.

The containment pad does not provide full containment for the tank car volume so that a major tank spill would spread to surrounding process areas. Therefore, tank heating and unloading must be carefully supervised by operators. Immediate action to contain a major spill will minimize any impacts.

The unloading facility will be replaced or modified to provide full secondary containment per section 3.19, Planned Improvements Schedule.

3.12 Tank Farm

All preservative tanks are in the concrete lined and diked tank farm. The largest tank capacity is 300,000 gallons. Containment capacity of approximately 308,000 gallons is provided by a concrete floor and wall surrounding the entire tank farm.

3.13 Fuel and Lubricating Oil

Gasoline and diesel fuel are delivered by tank truck and transferred into storage tanks that are within containments. Care must be taken to prevent spillage during dispensing fuel into vehicles and equipment.

Lubricating oil is delivered and stored in building, in 55-gallon drums. Drums will be stored upright and kept sealed. Dispensing areas will be kept clean. Oil drippage will be contained. Any minor spills will be cleaned up immediately.

Any oil or fuel spill (discharge) which violates applicable water quality standards, or causes a film or sheen upon or discoloration of the surface water or adjoining shorelines is reportable.

3.14 Oil Water Separator

The oil water separator is a reinforced concrete in-ground concrete tank with two primary basins. pH adjustment and coagulant and flocculent addition and mixing occur in an adjacent above ground steel tank. These tanks do not have secondary spill containment, but are equipped with high level switches which sound alarms in the control room and shut off inflowing wastewater. Plant operators are instructed in proper response to the high level alarms.

The separator will be replaced or modified to provide full secondary containment and leak detection per section 3.19, Planned Improvements Schedule.

3.15 Biological Waste Water Treatment

The activated sludge aeration tank, clarifier and final effluent tank are located in a concrete containment. The largest tank capacity is 150,000 gallons and the containment capacity is 198,000 gallons.

Although the treated effluent water presents a very small environmental risk, as a listed hazardous waste, a spill to the environment must be reported and cleaned if one occurs.

3.16 Drip Pad

Concrete drip pads have been installed to contain and recover any drippage which may occur from the freshly treated wood plus collect any storm water which falls onto the pads. Water and preservative is pumped from the drip pad sumps to waste water surge tanks, which have the design capacity to contain the water collected in a 24-hour, 25-year storm. Water from the oil process drip pad is transferred to the wastewater process for treatment.

3.17 Hazardous Waste Storage Facility

The Waste Storage Building is a less than 90-day facility for the storage of hazardous waste in containers. Up to 640 drums may be stored in the facility. Materials to be stored are the wastes generated at the plant. All materials to be stored are compatible with each other and are not reactive, explosive, or corrosive. The facility has a concrete floor with a berm and is fully contained within a steel building. The main significant spill potential is present when waste containers are being transported into or out of the building. Drums should only be transferred with gasket lids tightly

sealed. Only sound DOT approved drums are used.
Two hazardous waste satellite collection points exists on plant grounds. One is found outside the treating room door (left side of door). Another drum is found on the maintenance work pad.
Both drums are for creosote and PCP waste collection.

3.18 Boiler Fuel Preparation

The boiler is permitted to burn creosote and pentachlorophenol treated wood as fuel. This wood, consisting of used railroad ties and utility poles, is delivered to the site as whole pieces. They are ground into chips and placed directly into the boiler fuel silo. Care must be taken to assure that the ground wood fuel chips are contained within the fuel and boiler process areas and not be allowed to wash or blow to areas where they could impact soil or storm water runoff quality. We have two silos on site – one with untreated boiler fuel and one with treated boiler fuel.

3.19 Planned Improvements Schedule

The following work will be completed within the schedules stated to bring the plant into full conformance with the spill prevention requirements of 40 CFR 112 and good engineering practice:

Project Description	Complete by end of:
Replace or modify in-ground separator to provide full secondary containment and leak detection.	December, 2001
Replace or modify the tank car and truck unloading facility to provide full secondary containment.	December, 2002

TABLE 3.1 - TANK LISTINGS
Koppers Industries, Grenada Plant

Reference No.	Name	Contents	Capacity
1.	#1 Cylinder	Penta	34,000
2.	#2 Cylinder	Creosote 60/40	27,000
3.	#3 Cylinder	Creosote	27,000
4.	#4 Cylinder	Creosote #1	27,000
5.	#5 Cylinder	Penta	27,000
6.	#1 Work Tank	Penta in Oil	30,000
7.	#2 Work Tank	Creosote 60/40	30,000
8.	#3 Work Tank	Creosote	30,000
9.	#4 Work Tank	Creosote #1	22,420
10.	#5 Work Tank	Penta in Oil	30,000
11.	Measuring Tank	Creosote #1	4,200
12.	#1 Storage Tank	Creosote #1	100,000
13.	#2 Surge Tank	Process Water	100,000
14.	#5 Storage Tank	Fuel Oil	100,000
15.	#6 Storage Tank	Creosote 60/40	105,000
16.	#10 Surge Tank	Process Water	300,000
17.	Storm Water Surge	Storm Water	250,000
18.	Coagulant	Dearfloc 4301	2,500
19.	Decant Tank	Creo/Oil/Water	2,500
20.	Creo Blowdown Tank	Water/Creosote	10,000
21.	Air Receivers	Compressed Air	
22.	Air Receivers	Compressed Air	
23.	Penta Blowdown Tank	Water/Penta/Oil	10,000
24.	Gas Tank	Gasoline	1,000
25.	Fuel Oil #2	Fuel Oil	20,000
26.	Water Treatment Tank	Water	150,000
27.	Water Treatment Tank	Water	25,000
28.	Water Treatment Tank	Water	10,000
29.	Creosote Dehydrator	Not in Use	4,000
30.	N. Penta Equalization	Water/Oil/Penta	14,000
31.	S. Penta Equalization	Water/Oil/Penta	14,000
32.	Penta Mix Tank	Oil/Penta	9,400
33.	Penta Mix Tank	Oil/Penta	6,600
34.	Penta Concentrate St.	Penta Concentrate	8,800

4.0 EMERGENCY RESPONSE PROCEDURES

4.1 General

This section of the plan describes the actions that are to be taken by Koppers personnel in response to any injury, accident, fire, explosion, or unplanned sudden or non-sudden release of oil, hazardous waste, hazardous waste constituent, or hazardous material to the air, soil, or surface water.

4.2 Emergency Coordinator

As soon as an emergency situation is discovered by an employee, that person shall quickly estimate the extent the problem, take safe and appropriate control action, and then notify the plant management immediately. Once notified, the Plant Manager or the supervisor highest on the emergency notification list in Section 2.3, page 4, who is present will assume the responsibilities of Emergency Coordinator (EC). Other personnel will respond as a team under the direction of the EC as needed based on the type of emergency, individual skills, and plant responsibilities.

The EC has Koppers Industries' commitment to spill prevention and response and has the authority to commit plant employees and contract labor and equipment to response actions and to purchase needed supplies. The EC is responsible for the appropriate implementation of this plan in an emergency.

Effective communication is vital in any emergency response. All plant supervisors, have portable two-way radios which will be used for communication and coordination between the plant offices and yard areas. Phones may also be used between offices.

4.3 Immediate Response

As soon as an employee discovers an emergency situation, he shall quickly determine the extent of the problem. If a simple action can be taken to control a release or other emergency, such as shutting a valve to stop the flow from a ruptured pipe, and can be done safely, then the control action should be completed first. If there is no simple, safe control action or after taking such action, the person shall immediately notify the plant management and any other personnel who may be endangered by the incident by phone or radio.

4.4 Response Procedures

4.4.1 Upon discovery or notification that an emergency exists, the EC, assisted by the management team, shall:

- Determine the extent of the emergency,
- Implement plant evacuation, if needed, to prevent injury,
- Call for outside assistance as needed,
- Start immediate control actions,
- Implement cleanup or other responses,
- Notify local, state, and federal agencies as required,
- Notify Koppers Pittsburgh office,
- Assure completion of cleanup,
- Provide for storage of cleanup material, inc. hazardous waste,
- Evaluate possible hazards to human health or environment,
- Make a final written incident report.

Many of these actions may occur concurrently and are discussed further below.

4.4.2 Whenever there is an imminent or actual emergency situation, the emergency coordinator, or his designee, shall:

- Immediately call by radio or phone to notify all facility personnel;
- Immediately notify appropriate federal, state, and/or local agencies with designated response roles if their help is needed;
- Make other notifications as stated in Section 3.5, Emergency Notifications.

4.4.3 Whenever there is a release, fire, or explosion, the emergency coordinator shall immediately identify the character, exact source, amount, and area extent of any released materials. This may be done by observation or review of facility records or manifests and, if necessary, by chemical analysis. Form 4.1 should be used to document the information needed for notifications.

4.4.4 Concurrently, the Emergency Coordinator shall assess possible hazards to human health or the environment that may result from the release, fire, or explosion. This assessment shall consider both direct and indirect effects of the release, fire, or explosion (e.g., the effects of any toxic, irritating, or asphyxiating gases that are generated, or the effects of any hazardous surface water run-off from water or chemical agents used to control fire and heat-induced explosions).

4.4.5 If the Emergency Coordinator determines that the facility has had a release, fire, or explosion which could threaten human health, or the environment, outside of the facility, or if the released amount of hazardous or extremely hazardous material exceeds the Reportable Quantity (RQ), the findings shall be immediately reported to the National Response Center as in Section 4.5, Emergency Notifications. Note that the reportable quantities for materials are listed in Section 4.5.

If his assessment indicates that evacuation of local areas may be advisable, appropriate local authorities shall be notified immediately. The Emergency Coordinator shall be available to help appropriate officials decide whether local areas should be evacuated.

4.4.6 During an emergency, the Emergency Coordinator shall take all reasonable measures necessary to ensure that fires, explosions, and releases do not occur, recur, or spread to other hazardous wastes or materials at the plant. These measures could include turning water sprays onto tanks, stopping and isolating processes, shutting off power to areas, collecting and containing released materials, or moving and isolating other containers.

4.4.7 If some or all operations are stopped in response to an emergency, the emergency coordinator shall monitor tanks, pipes, valves, and other process equipment for leaks, pressure build-up or ruptures wherever appropriate.

4.4.8 Immediately after an emergency, the Emergency Coordinator shall provide for treating, storing, or disposing of recovered materials or wastes, contaminated soil, surface water, or any other material that results from a release, fire, or explosion.

4.4.9 Before resuming operations, the Emergency Coordinator shall:

a. Insure that clean up is complete to the point that operations will not interfere or create further potential for hazardous waste release,

b. Insure that all emergency equipment is cleaned and fit for use, and

c. If hazardous wastes or a hazardous waste unit has been involved, then advise the Mississippi Department of Natural Resources and EPA Region IV that Steps a. and b. above are complete.

4.4.10 If hazardous wastes or a hazardous waste unit has been involved, the Emergency Coordinator shall submit a written report within 15 days of the incident to the Department of Health Services. Form 4.1, completed, may fulfill this purpose or will at least provide a basis for the report. A copy of the completed report shall be maintained in the Operating Record.

4.5 Emergency Notifications, Reports, and Record Keeping

4.5.1 The emergency coordinator shall ensure that the necessary notifications are made. The following form 4.1 is a three page form titled, "Emergency and/or Hazardous Materials Incident Report." Page 1 is organized to provide all the information needed for the initial verbal notification of the National Response Center or other agencies. As soon as a spill or other incident is discovered, the supervisor/manager who will do the reporting should begin filling in the information.

Page 2 should be used as a log of notifications made. Get the position and name of the person who accepts the phone notifications. Also, if an incident number is assigned, as by the National Response Center, that number should be recorded. As more is learned about the incident, the report should be updated. Updates can be recorded on page 2 as well.

Pages 1 and 2, completed either by hand or typed, can be used for the required written notification of agencies. These should be sent with cover letters showing everyone who will get copies. Copies must be kept in the plant's Operating Record.

Finally, page 3 should be used for Koppers Industries internal reporting of additional related information. KII has an obligation to report all spills which could possibly impact over-all cleanup work to Beazer East, Inc. (BEI). The complete report, Pages 1, 2, and 3 should be sent to the KII Environmental Program Manager, including original photographs. He will provide any required notification to BEI.

Copies of all completed Incident Reports must be maintained at the plant as part of the Operating Record.

4.5.2 WHAT SPILLS OR INCIDENTS MUST BE REPORTED AND TO WHOM?

Following is a summary. Note that more than one category may apply.

If outside help is needed, IMMEDIATELY:

Call fire and/or other appropriate emergency agencies, describe incident and needed assistance, such as fire suppression, medical aid, evacuation, and/or crowd control.

If release or threatened release of hazardous material, IMMEDIATELY:

Call the Local Emergency Planning Committee (LEPC). This report shall be made unless it is determined that the release poses no significant hazard to human health and safety, property, or the environment and is less than the reportable quantity for the material.

Such releases which cannot be recovered must also be included in the SARA Title III annual reports.

If health threat or release outside of facility; OR

If the release results in or has the potential to cause an oil sheen on or discoloration of runoff water; OR

If release of hazardous or extremely hazardous material exceeds the Title III Reportable Quantity, IMMEDIATELY:

Call **National Response Center** at 800-424-8802.

If hazardous waste or a hazardous waste unit is involved OR if the plant contingency plan is implemented; IMMEDIATELY AND NOT LATER THAN 24 HOURS:

Call the appropriate **Mississippi Department of Environmental Quality**
AND, Within 15 days
Submit a written report of the incident to the agency.

If injuries result in 5 or more people being hospitalized or 1 or more person killed, IMMEDIATELY AND NOT LATER THAN 48 HOURS:

Call the **U. S. Occupational Safety and Health Administration** or authorized state OSHA agency.

If an uncontrollable release occurs, IMMEDIATELY CALL **IT Corporation** at 1-800-537-9540 and ask for an "Emergency Response Manager."

In all cases, as soon as the emergency situation allows, Koppers management in Pittsburgh shall be called. Follow the guidance contained in "Internal Emergency Notification Procedures" for Koppers Industries, Inc. At least one of the following primary contacts in Pittsburgh shall be notified:

Name, Position	Work Phone	Home Phone
Tim Basilone, Environmental Manager	(412) 227-2114	
John Marcinowski, Product Safety	(412) 227-2884	(412)384-9430
Michael Juba, Industrial Hygiene	(412) 227-2882	(412)731-4977
Lee Allison, Mgr. Occ. Health	(412) 227-2424	(412)899-2131
Randy Collins, Mgr. Loss Control	(412) 227-2456	(412)384-2855
Clark Mitchell, RU&P Ops Mgr.	(412) 227-2388	(412)724-2296
John Heller, Railroad Ops. Mgr.	(412) 227-2768	(412)

4.5.3 WHAT SPILLS ARE REPORTABLE?

For hazardous materials, Reportable Quantities (RQ) are specified by the EPA. Additional requirements may be set by some states. The Federal Quantities are:

Creosote	1 pound
Pentachlorophenol	10 pounds
Penta waste from mixing process	1 pound
Arsenic	1 pound
Chromium	1 pound
Process Waste Water	1 pound
Creo/Penta Waste Water Treatment Sludge	1 pound
Sodium Hydroxide	1000 pounds
Phosphoric Acid	5000 pounds
Sulfuric Acid	1000 pounds
Gasoline (as D001, Ignitable Waste)	100 pounds

The Clean Water Act also has reporting requirements. Generally if "oil" is released to or presents the potential to be released to navigable waters in amounts that violate an applicable water quality standard or cause a sheen upon or discoloration of the surface of the water or adjoining shorelines or cause a sludge or emulsion to be deposited beneath the surface of the water or upon adjoining shorelines, then it is reportable and the National Response Center must be notified.

Gasoline, lubricating oils, diluent oil, and transmission fluid are all regulated as "oil". Unless released as above, reporting is not mandatory.

4.5.4 IF IN DOUBT, REPORT!

If a spill is large enough to require cleanup action but is not reportable, it generally is a good practice to make a courtesy report to the local agency contact. It shows that we are on top of the problem and

provides valuable documentation of our response in case of a report by a third party. The attached written report form should also be completed and submitted internally.

Form 4.1

EMERGENCY AND/OR HAZARDOUS MATERIALS INCIDENT REPORT

OWNER/OPERATOR: Koppers Industries, Inc.
Plant Name: Grenada Mississippi Plant
Street Addr: 1 Koppers Drive
Mail Addr: P. O. Box 160
City, St, ZIP: Tie Plant, Mississippi 38960
Phone: 601-226-4584
EPA ID #: MSD007027543

FACILITY: Same as above

DATE OF INCIDENT: _____ TIME OF INCIDENT: _____

TYPE OF INCIDENT: (Circle One) Fire, Explosion, Hazardous Material Spill, Hazardous Waste Spill, Injury Accident

Other: _____

MATERIALS INVOLVED:

Name	Quantity

EXTENT OF INJURIES, IF ANY:

_____

_____

ASSESSMENT OF ACTUAL OR POTENTIAL HAZARDS TO HUMAN HEALTH OR THE ENVIRONMENT, WHERE APPLICABLE:

_____

_____

_____

DISPOSITION OF RECOVERED MATERIAL:

Material	Quantity	How Disposed or Stored

Table 4.1
EMERGENCY AND/OR HAZARDOUS MATERIALS INCIDENT REPORT

SUPPLEMENTAL INFORMATION REPORT
(This part of report is intended for KII internal use only.)

CLEARLY DESCRIBE HOW INCIDENT OCCURRED:

_____
_____
_____
_____
_____

WHAT ACTS OR CONDITIONS MOST DIRECTLY CAUSED THE INCIDENT:

_____
_____
_____

DESCRIBE WHAT HAS OR WILL BE DONE TO PREVENT A RECURRENCE:

_____
_____
_____
_____

DESCRIBE ANY RESIDUAL CONTAMINATION OR IMPACT:

_____
_____
_____

ATTACH PHOTOGRAPHS WHICH SHOW INCIDENT AREA, BEFORE AND AFTER RESPONSE ACTIONS. MARK DATE OF PHOTOS.
ATTACH ADDITIONAL SHEETS AS NEEDED TO DESCRIBE INCIDENT AND RESPONSE ACTIONS.

4.6 Available Equipment

The following equipment is available at the plant:

Equipment	Location
Lumber lift trucks	Shop
Hydraulic Loaders	Shop
Dump Truck	Shop
Grader	Shop
Skidder	Treating
Pickup Truck	Shop
Portable pumps	Shop
Sawdust and sorbents	Treating, Shop
Portable steam cleaner	Treating

The above equipment can be effectively used to control and clean a spill of oil, hazardous material, or hazardous waste. Trucks and loaders can be used to transport and place soil for containment dams, sorbent to soak up spilled liquid, and contaminated soil from cleanup actions. Pumps can be used to pump spilled liquid back into containment. After response action is complete, equipment should be placed on the drip pad or other contained area and decontaminated with the steam cleaner prior to being released from the response.

4.7 Emergency Response Contract Services

Koppers has entered into a Corporate Agreement with IT Corporation to provide various environmental services in the event of an emergency. IT Corporation may be reached at their nationwide 24-hour line at 800-537-9540 and ask for an ":Emergency Response Manager.

Additionally, the following local contractors are available:

Willis Engineering - Robert Willis
Grenada, MS 38901
Phone: 601-226-1081

Electrician
Ronald Edwards
Edwards Electrical Service
Rt. 1 Box 106
Carrollton, MS 38917
Phone: 601-229-0606

4.8 Emergency Response Plans (Fire, Civil, etc.)

4.8.1 This section of the Contingency Plan provides additional information on specific response actions to be taken in the event of a major disaster, emergency, or other disruption. Such an event could include:

- Fire or explosion
- Earthquake
- Strike or civil strife.

4.8.2 Fire or Explosion

Fire disasters can occur anywhere in the plant environment, so all employees should be knowledgeable as to the proper method for handling type A, B, and C fires, and where the largest potential risk areas are located. Communications with and between plant employees is vital to a safe and effective response. Therefore, the following sections describe responses that put all employees at locations where plant radios or phones will be available. Additionally, this will facilitate accounting for all personnel without having to search for anyone. Employees, which respond to the gate, will keep all unauthorized traffic out of the plant and move other traffic in and out as needed.

All fire emergency operations will be done by the Grenada Fire Department and responding agencies. Koppers employees will evacuate and correlate with the responding agencies.

4.8.3 Designated Response Stations

In the case of a disaster or other major incident, employees shall secure their work areas and processes and then report to the following designated response stations:

(If they are not directly involved in Emergency Response)

Fire Pump
Maintenance Supervisor: John Cummings (or his designate)

Treating Plant employees stay at plant area for controlled shutdown, if safe. Otherwise, respond to the Service Building.

Plant Office Employees stay at office., Coordinate outside calls, inquires, and media contacts.

4.8.4 Evacuation

The need for evacuation shall be signaled by a message over the radio to all supervisors, who will notify their employees. Employees shall follow the safest path to meet and check in at the following location:

Service Building

Supervisors shall account for all of their employees, notify the main office when they are "all clear" and relay further instructions. An alternate location will be designated and announced at the time of the incident if the service building is not a safe check-in location.

4.8.5 Fire Suppression Systems

Sprinklers, activated by fusible links in the nozzles, are located in the ceiling areas of the treating building. Water supply must be on at all times.

Fire Hose and Hose Reels are located at strategic points around the plant. Employees must be familiar with ones within their work areas.

Fire Extinguishers are located throughout the plant and on rolling stock. CO-2 and ABC Dry Chemical types are used exclusively.

Diesel or Electric Fire Pump is located in the firehouse, which pumps from the raw tanks. The pump is manually operated. This will provide fire protection water to the main fire pipe system.

4.8.6 Civil Strife, Strike

Emergencies resulting from, or shutdowns as a result of, civil strife or strike situations require the control of people entering the plant, both authorized and unauthorized. Local law enforcement agencies can be helpful in achieving this goal, but in-plant security is management's immediate concern. When a total shutdown is planned, and security measures are to be implemented, the following should be observed.

Treating Plant

- Secure all treating systems, close cylinder doors, shut all valves, open all steam drain lines, shut down air compressor or arrange for maintenance.
- Inspections of all processes shall be made on a regular basis, at least once every 2 hours at first, then every 4 hours.

Boiler

- Secure gate and door locks.
- Follow established shutdown procedure.
- Assure that all steam line drains are open.

Hazardous Waste Storage Facility

- Properly stores all hazardous waste drums in facility.
- Lock doors.

Major Operations including Mill, Stacker, and Shop
- Secure electrical panels.
- Turn off air compressors, shut valves.
- Store and secure portable tools, cords, hoses, etc.
- Clean up area for safety and fire protection.

Rolling Stock
- Park centrally in area in front of office.

Gates
- Keep locked at all times.
- Put on new locks to prevent unauthorized entry.

Access Roads
- Blockade with ties or lumber.

Security Patrols
- At least 2 persons will provide security patrols on shifts, 24 hours per day.
- Plant vehicles will be provided
- Communication will be maintained at all times between the patrols and the main office by radio.

4.9 Medical Emergency Plans

Emergency and first aid supplies are maintained at the following work locations:

Main Office (Main supply center)
Treating Room – Control Room

First aid supplies are intended for use on minor cuts, abrasions, and burns requiring simple care such as Band-Aids, disinfectant, or ointment. Supplies are also available for the immediate treatment of severe injuries while awaiting professional medical care, such as gauze pads, bandages, and splints. First aid applied at the plant by plant employees is in no way intended to replace any needed medical attention, but only to help prior to receiving professional treatment.

If a serious injury occurs, assure that an ambulance is called immediately.

5.0 STORM WATER POLLUTION PREVENTION PLAN

5.1 General

This section of the plan describes the pollution prevention procedures and facilities for this plant to minimize the impact of storm water runoff to the surrounding environment. This section specifically addresses the requirements of the Storm Water General NPDES Permit, including special requirements for wood preserving industrial operations.

5.2 Pollution Prevention Objectives and Process

The objectives of the storm water PPP are; 1) to identify potential sources affecting pollution of storm water and 2) describe and implement practices to minimize and control pollutants in storm water discharges and ensure permit compliance. In the preamble to the Federal Register which finalized the EPA storm water general permits, EPA described the permit program as "intended to facilitate a process whereby the operator of the industrial facility thoroughly evaluates potential pollution sources at the site and selects and implements appropriate measures designed to prevent or control the discharge of pollutants in storm water runoff." That process includes the following:

1) Form a Pollution Prevention Team,
2) Assess sources,
3) Select and implement practices and controls, and
4) Conduct periodic evaluations.

The pollution prevention team is responsible for developing this pollution prevention plan and assisting in its implementation, maintenance, and revision. The team consists of the following:

STORM WATER POLLUTION PREVENTION TEAM

NAME	POSITION	RESPONSIBILITIES
Tom Henderson	Plant Manager	Overall plant compliance
Anthony A. Mayhan	Environmental & Treating Supervisor	Plan development and coordination, Routine inspections and enforcement.
Steve Joy	Assistant Plant Manager	Provide perspective for development and coordination
Tim Basilone	Corporate Environmental Manager	Plan development and engineering certifications, regulatory advise.
Walter Hobbs	North Pole Yard	Provide operational perspective for source identification and control measures.
Lloyd Sivley	South Yard	Provide operational perspective for source identification and control measures.
Robert Reed	Utility Operator	Responsible for yard maintenance.
Broderick Spencer	Loader Operator	Provide equipment operator perspective in source identification and control measures.

5.4 Description of Potential Sources

This section describes activities, materials, and physical features potentially contributing to pollution.

5.4.1 Plant Drainage

Drainage patterns are shown on the Storm Water Management Plan, Figure 2. Generally, the central portion of the plant, which includes the preserving process area and maintenance shop, drains into the mid plant ditch. The north quarter of the plant, including the pole peeler yard, drains north to the north ditch and the south end of the yard drains south to the south ditch.

Significant plant features are identified on the Storm Water Management Plan, including the preserving process area, maintenance shop, drip pad, fuel tanks, material storage, loading, and unloading areas, and other process operations.
Pollutants most likely to be detected in storm water and likely sources are as follows:

Wood preservatives, including pentachlorophenol and creosote (which includes primarily various polycyclic aromatic hydrocarbons (PAHs)), may be detected in soil and storm water at many locations on the plant. Wood preserving has been conducted on this property since the early 1900s. Preservative may be present due to past waste disposal practices, past wood preserving practices, drippage from treated wood, preservative spills, and rain runoff from treated wood in storage.

Fuel, lubricating, and hydraulic oils are used on plant mobile equipment, trucks, and most fixed manufacturing equipment. Drips, leaks, or spills may contribute oil to storm water runoff.

Boiler and waste water treatment chemicals are used in the process area, but are kept in contained areas and are unlikely to impact storm water.

Other organic matter, generally from wood, may also be present in runoff from piles or stacks of wood poles, ties, or peeler shavings.

5.4.2 Inventory of Exposed Materials

Significant materials stored in exposed locations at the Koppers plant include untreated and treated wood poles and railroad ties, wood waste fuel, and yard waste materials. Typical inventory levels of these materials are:

Untreated RR ties:	260,000 pcs.
Creosote treated ties:	6,000 pcs.
Barky poles:	100 pcs.
Untreated poles:	3,700 pcs.
Penta treated poles:	9,000 pcs.
Creosote treated poles and piling:	3,000 pcs.
Untreated Switch Ties:	16,000 pcs.
Creosote Switch Ties:	4,000 pcs.
Untreated Lumber:	3,000 pcs.
Creosote Lumber:	3,000 pcs.
Yard waste:	5 bins
Peeler Shavings:	8 tons

All treated and untreated wood is stored in piles in the yard. Contact with rain is not controlled. Current practices to minimize impacts include:

Preservative cycles are designed to minimize drippage and produce clean surfaces on the treated product. These include extended vacuums, cleaning as needed, and proper preservative

temperatures. Treated wood is kept on the concrete drip track until any drippage has ceased.

Yard inspections are conducted daily, except when not treating, to detect and respond to preservative drippage, in accordance with Operating Procedures.

Treated wood is stacked on skids to prevent it from sitting in puddle surface water.

Preservative storage and process tanks and equipment are all located within containment facilities as described in Section 3 of this plan.

5.4.3 Significant Spills and Leaks

Within the last three years there have not been any spills or leaks, which resulted in any remaining site contamination. Copies of all spill reports for spills occurring during or after 1989 (the formation date of KII) are maintained in the plant operating record. These reports include a description of actions taken to prevent similar events.

5.4.4 Non-Storm Water Discharges

All process water is collected and pretreated on-site prior to discharge to the POTW. Process water includes wood water from boultonizing, preserving process condensate, vacuum seal water, rain and wash water collected within process containment's, boiler and cooling tower blowdown, and vehicle and equipment wash water from the shop. Members of the Team for flow during dry weather have inspected surface drainage and no dry weather flows were occurring. Certification is provided in Appendix C by use of a completed Non-Storm Water Discharge Evaluation and Certification, Mississippi Worksheet 2C.

5.4.5 Sampling Data

Sample results are maintained at the plant in a Storm Water Monitoring Results file.

5.5 Measures and Controls

5.5.1 Good Housekeeping

The need and reasons for good housekeeping will be communicated and emphasized to each employee and contractor working on the plant. Housekeeping practices will be part of each persons job, with emphasis on preventing contamination over cleaning contamination after it has occurred. Each supervisor is responsible for assuring that housekeeping is completed as part of each person's job.

Good housekeeping practices, including but not limited to the following, will be required at Koppers Industries:

* When cutting treated wood, collect sawdust and cutoff pieces. Do not leave waste on the ground.
* Do not drive loaders or trucks through ditches or standing water. Stay on established roadways.
* Mobile equipment will not be operated with significant oil or hydraulic leaks. If major leaks develop, such as a hydraulic line breaking, equipment will be shut off in place and repairs made before returning equipment to service.
* Drippage or leakage from equipment will be thoroughly cleaned, with contaminated soil being properly disposed.
* Stationary hydraulic equipment will be maintained to minimize leaks and leakage will routinely be cleaned and properly disposed.
* Waste developed during work will be placed in proper containers for disposal directly rather than placing on the ground to be collected later.
* Recycle scrap metal as generated and do not accumulate it on the ground.

5.5.2 Preventive Maintenance

Storm water management devices, such as detention basins and outlet structures, will be inspected at least monthly and after storms producing significant runoff. These will be inspected for signs of erosion, excess collected silt from runoff, and collection of debris that could interfere with discharge monitoring or flow. Records of inspections will be kept in the plant's operating records. See appendix B for inspection form.

On-site drainage will be inspected for signs of erosion or high silt loads or turbidity during runoff events. Such inspections will be made at least four times a year, depending on storm events. Sources of turbidity or silt will be identified and potential remedial actions identified. Corrective actions which should be considered include; rerouting of plant traffic, paving or gravel surfacing roads, ditch modifications, culvert additions or changes, changing yard activity or material storage locations, changing vegetation management, and yard grading. Inspections and actions taken will be documented on the Storm Water Management Facilities Inspection Record, shown in Appendix B.

Production equipment, including loaders, trucks, and fixed equipment, will be inspected weekly by the people operating the equipment. Inspections will include checks for oil or hydraulic leaks, accumulations of oil soaked dirt, pump, valve, and cylinder packing, and any other devises that could cause or contribute to leaks. Identified needs will be either repaired by the operator or will be identified to the maintenance department.

Maintenance needs identified by inspections will be accomplished on a schedule appropriate for each situation. Leaking mobile equipment will not be operated on the yard until the leaks are repaired.

5.5.3 Spill Prevention and Response

Spill prevention procedures and equipment are fully described in section 3 of this plan. Procedures for responses to spills or other emergencies are described in section 4 of this plan.

5.5.4 Inspections

This section will describe inspection procedures for storm water pollution prevention. In addition, there are also inspection requirements, which also further support pollution prevention under various other programs, including:

* Process area tank and containment inspections required by the SPCC provisions of this plan,
* Hazardous waste facility inspections required by RCRA,
* Drip pad inspections required by RCRA and the drip pad operating procedures, and
* Storage yard inspections of treated inventory required by RCRA and the storage yard contingency plan.

Storm water pollution prevention devices, such as detention basins and outlet structures will be inspected quarterly and after storms producing significant runoff. Upgradient ditches and drainage systems will be inspected at least four times a year during runoff events. These inspections will be performed by the Environmental Supervisor. In his absence, another member of the Team will conduct the inspections. Other Team members will participate as appropriate. A Storm Water Pollution Prevention Inspection Form will be used to document each inspection. Maintenance or repair needs will be identified on the form. The form will also be used to document when and how identified needs are corrected. A blank form is included in this plan in Appendix B. Completed inspection forms will be maintained at the plant per Section 5.5.5 of this plan.

5.5.5 Record Keeping and Internal Reporting Procedures

Record keeping and reporting procedures for spills are described in section 4 of this plan.

All completed Storm Water Pollution Prevention Inspection Forms will be maintained by the Environmental Supervisor. He will also be responsible for tracking maintenance or repair work to assure that needed work is completed and documented.

Maintenance and repair needs identified by inspections and which cannot be corrected by the inspector will, at a minimum, be reported to the Plant Manager and function Supervisor, as appropriate. Where priorities need to be determined, evaluation by the Pollution Prevention Team may be involved. The Plant Manager is responsible for setting work priorities and schedules.

5.5.6 Sediment and Erosion Control

The plant site is generally flat to slightly rolling. Soil does not tend to erode, except where vehicle traffic keeps the surface loose and prevents vegetation. Erosion is a problem where storm water runs or puddles in areas of active traffic. This section describes **prevention** type procedures for sediment and erosion control.

Erosion prevention mainly involves the design and maintenance of plant roads, drainage, and storage areas and procedures to assure these are properly used. Main roads, drainage, and storage areas are identified on the Storm Water Management Plan. Planned improvements to road and drainage areas known to be causing erosion have been completed and are identified on the Plan. Additional improvements will be made as necessary based on future inspections.

Existing drainage system - The existing yard drainage design has been reviewed by the plant pollution prevention team. The goal is to not create mud. Designs separate ditches from traffic. Culverts have been added where needed. Gentle side slopes, such as three horizontal to one vertical, will be used so that grass can grow and be mowed.

5.5.7 Management of Runoff

The plant drainage system has been designed to maximize its potential to mitigate or improve the quality of storm water runoff. Mitigation involves equipment and procedures to minimize the off-site affect of erosion and other activities occurring on-site. These generally include use of grassy swales or drainage to help filter sediment from runoff water and detention basins to enhance gravity settling and filtration by plants to remove sediment from the runoff water.

Storm Water run-off sediment and erosion control mitigation measures are described below for each discharge point and are shown on the Storm Water Management Plan.

Discharge 1 - This discharge to the south flows under a road through a culvert. The sampling point is at the culvert inlet. There is no sign of erosion or silt deposition in this drainage. Thus, no work is recommended. Inspection results will be used to evaluate any need for future improvements.

Discharge 2 - This includes runoff from approximately the northwest half of the south yard. An outlet structure provides for slow discharge of accumulated runoff and allows overflow during large storms. The detention pond provision allows for settling of sediment, which will improve water quality.

Discharge 3 - Storm water catch basins around the shop area now drain to a ditch which discharges around the remediation project / site. Effluent should be sampled at the runoff into the ditch.

Discharge 4 - This discharge includes runoff from much of the wood preserving process area and could, in case of a spill, contain spilled preservative chemicals. A detention pond provides for settling of sediment. The outlet from this pond is into the mid-plant ditch.

Discharge 5 - Plant areas draining to this discharge include some of the most intense traffic in the yard, including truck loading and unloading, kiln loading and unloading, and treated pole storage. A detention pond provides for sediment settling prior to discharge.

Discharge 6 - A relatively small part of the north yard drains to this ditch, but erosion of plant soils along the road and pole bins is evident. The detention basin and outlet structure will provide for some sediment removal.

Discharge 7 - Runoff from most of the north half of the north yard runs into the north ditch, previously via several discharge points. The detention basin and intercept ditches combine these into one discharge point and provide for sediment removal. The pole peeler yard is included in this drainage.

Discharge 8 - Runoff from a small portion of the north end of the south yard runs into this detention basin. Runoff from storage areas and from roadways is collected in this basin.

Discharge 9 - The north West End of the south yard drains into the area. This includes the untreated and treated lumber storage yards and most of the Lumber mill area. Berms and intercept ditches combine into one discharge point and the detention pond provides sediment removal.

Detention basins are designed to hold at least an average storm event, which is about one inch rainfall, and are able to contain runoff from a two-inch rainfall, recognizing that the runoff coefficient is probably about .3 to .5. This will allows for total containment of most storms to maximize water quality benefit at minimum cost and also mean that only a grab sample from the basins would be required, rather than collecting and testing both first flush and composite samples.

Outlet structures - Outlet structures meet several needs, including; provide for flow monitoring, provide a location for sampling, retain water for most storm events, allow slow release of water over one to several days, pass large storm flows as overflow without damage to structure or dams, allow for flow shutoff in case of a spill within the plant, and be easy to maintain.

Wet detention versus dry detention - Wet detention basins, in which at least a portion of the basin is a permanent pond, provide more potential for biological treatment and generally longer hydraulic holding time for the water than dry detention basins, which completely drain following storm events. However, wet basins also present special problems. The permanent ponds can present safety or liability problems, mosquito breeding can be a nuisance, maintenance is more difficult, the long term ponding of potentially contaminated water can pose groundwater questions, and initial cost is greater. The dry detention basins require less excavation, thus less cost, and, since they are actually dry most of the time, present much less hazard. Additionally, a dry basin can later be made into a wet basin by digging part

of it deeper. Thus, dry detention basins have been installed. If monitoring results indicate a need for water quality improvement that could be achieved by a wet pond, then modifications will be implemented as needed.

All construction areas have been seeded and mulched to establish a native mix of annual and perennial plants to control erosion and provide filtration.

5.6 Comprehensive Site Compliance Evaluations

Comprehensive site compliance evaluations (Evaluations) are required by the General Permit and are intended as self-audits of the plant storm water pollution prevention program. The Evaluations will be conducted to:

1) Confirm the accuracy of descriptions of sources contained in the PPP,
2) Determine if all storm water pollution prevention measures are accurately identified in the plan, in place, and working properly, and
3) Assess compliance with the storm water NPDES permit.

Evaluations will be made at least annually. The plant manager is the individual responsible for the evaluations and will sign each evaluation. Other members of the team may be involved in the evaluation, as requested by the plant manager. Each Evaluation must be documented. Documentation should include the date of the Evaluation, names of persons involved, a listing of areas inspected, major observations, deficiencies noted, and the signature of the plant manager. Documentation will consist of the Mississippi Part VII evaluation form and will be kept in the plant operating records. The storm water pollution prevention plan will be revised within two weeks after the Evaluation inspection and those revisions must be implemented in a timely manner and not later than 12 weeks after the inspection.

5.7 Special Requirements for EPCRA Section 313 Facilities

There are special requirements for facilities which store, process, or otherwise handle Section 313 listed chemicals. This plant uses pentachlorophenol and creosote, which are such chemicals and reports releases of these annually on the Form R reports. These materials are stored in tanks and used in the process area where full secondary containment is provided. Thus, all storm water which could come in contact with the chemicals is contained. All liquids, including storm water, from the containment areas is processed in the wastewater treatment system and discharged to the POTW. No water from process or tank secondary containment is discharged with storm water runoff.

The procedures and equipment, as described in Section 3 of this plan and relating to Section 313 chemicals, assure that the standards of good engineering practice are met.

5.8 Monitoring and Reporting Requirements

Monitoring of storm water runoff is required by the General Permit for specified parameters and results of monitoring are to be reported to the State in accordance with that permit. These requirements are summarized in this section.

5.8.1 Parameters and Sample Types

Operations contributing to each outfall are substantially the same, i.e. wood preservation, so each outfall must be monitored for the same constituents. The following parameters are to be measured in the units noted:

Parameter	Units	Sample Types
pH	s.u.	Grab
Total Suspended Solids (TSS)	mg/l	Grab + Composite
Oil and Grease	mg/l	Grab
Total Phenols	mg/l	Grab + Composite
Pentachlorophenol	mg/l	Grab + Composite

In addition, the following will be determined and reported:

* The date and duration (in hours) of the storm(s) sampled;
* Rainfall measurements or estimates (in inches) of the storm which generated the sampled runoff;
* The duration between the storm sampled and the end of the previous measurable (greater than 0.1 inch rainfall) storm; and
* An estimate of the total discharge (gallons) for the storm sampled.

5.8.2 Frequency of Monitoring

Sampling will be conducted at least one time per year, except as exempted in the permit for concentrations below indicated values or for substantially identical discharges.

5.8.3 Outfall Information Summary

OUT-FALL NO.	LOCATION	INDUSTRIAL OPERATIONS IN RUNOFF AREA	AREA AND RUNOFF COEF.	SAMPLING METHODS
1	South end of south yard	Treated and untreated wood storage, closed ash landfill	15.9 Acres C= 0.3	report outfall #2 results
2	Northeast end of south yard	Treated and untreated wood storage, switch tie mill	12.1 Acres C= 0.3	composite grab from detention pond
3	Maintenance shop area	Vehicle and equipment maintenance, washing	2.8 Acres C= 0.5	report outfall #2 results
4	Southwest 1/4 of north yard	Treated and untreated wood storage, hazardous waste storage, boiler, wood treating process, preservative tanks, cooling water pond	24.1 Acres C= 0.3	composite grab from detention pond
5	Southeast 1/4 of north yard	Treated and untreated wood storage, dry kiln, truck loading, closed surface impoundment	26.2 Acres C= 0.3	composite grab from detention pond
6	Northeast 1/4 of north yard	Treated and untreated wood storage	9.5 Acres C= 0.3	composite grab from detention pond
7	Northwest 1/4 of north yard	Treated and untreated wood storage, pole peeler, bark storage	13.2 Acres C= 0.3	composite grab from detention pond
8	Middle area of north end of south yard	Treated and untreated wood storage, tram loading/unloading area.	2.4 Acres C=0.3	report outfall 2 results
9	Northwest end of south yard	Lumber mill area, truck loading and unloading, treated and untreated	10.7 Acres C=0.3	report outfall 2 results

		storage area		

5.8.4 Criteria for Sampling

A) For discharges from detention ponds with a retention period greater than 24 hours, (estimated by dividing the volume of the detention pond by the estimated volume of water discharged during the 24 hours previous to the time that the sample is collected) one composite grab sample will be taken.

B) For all other discharges, both a grab sample and a composite sample will be taken.

All such samples shall be collected from the discharge resulting from a storm event that is greater than 0.1 inch in magnitude and that occurs at least 72 hours from the previously measurable (greater than 0.1 inch rainfall) storm event. The grab sample will be taken during the first 30 minutes of the discharge. The composite sample will be either flow-weighted or time-weighted in accordance with the General Permit.

5.8.5 Substantially Identical Outfalls

Discharge from outfall 8 and 9 is substantially identical to discharge from outfall 2. Yard activities which could impact storm water runoff and soil conditions are similar. Additionally, there are no activities in area 8 or 9 that would make their discharges be more impacted than are occurring in area 2. All of these areas contain some treated wood, but mostly untreated wood and have similar levels of vehicle traffic.

Discharge sampling is not required for outfall 1, 8, or 9, provided that effluent levels determined for outfall 2 are reported for these outfalls.

5.8.6 Reporting

Annual Comprehensive Site Compliance Evaluation inspection reports and annual Discharge Monitoring Reports will be submitted to the following location and must be postmarked no later than January 28 for the previous report year.

Environmental Compliance Division
MS Dept. of Environmental Quality
P. O. Box 10385
Jackson, Mississippi 39289-0385

5.9 Compliance Schedule

Activity Description	Complete by end of:
Design and implement improvements to runoff drainage system	Completed

5.10 Record Keeping

5.10.1 Retention of Records: A NPDES Storm Water Pollution Prevention File will be maintained at the plant. Records of all monitoring information, including all calibration and maintenance records and all original strip chart recordings for continuous monitoring instrumentation, copies of all reports required by the General Permit, periodic inspection reports, annual compliance evaluations, and records of all data used to complete the Notice of Intent will be maintained in the file for a minimum of three (3) years from the date of the measurement, report, or application.

5.10.2 Records Content: Records of monitoring information shall include:

a. The date, exact place, and time of sampling or measurements;

b. The initials or name(s) of the individual(s) who performed the sampling or measurements;

c. The date(s) and time(s) analysis were performed; and

d. Complete laboratory reports, including references or procedures for analytical methods used, results of such analyses and blank, duplicate, or method spike results.

6.0 TRAINING

All plant employees shall receive training on the content of this plan. Supervisors will each receive a copy and become thoroughly familiar with it through training, discussion, and self study. Supervisors will train their employees in the overall plan and in the specific needs of their work areas.

Training will, at a minimum, include programs to ensure that facility personnel understand basic procedures for pollution prevention and good housekeeping and are able to respond effectively to emergencies by familiarizing them with emergency procedures, emergency equipment, and emergency systems, including, as applicable to each employee's job function:

* Applicable pollution control laws, rules, and regulations;

* Procedures for using, inspecting, repairing, and replacing facility emergency and monitoring equipment;

* Communications and alarm systems;

* Response to fires or explosions;

* Response to ground-water or surface water contamination incidents;

* Shutdown of operations;

* Methods for the safe handling of hazardous materials;

* Procedures for coordination with local emergency response organizations;

* Use and location of medical supplies;

* Use of emergency response equipment and supplies appropriate to work areas; and

* Emergency response procedures and plans contained within this Plan.

Refresher training will be provided at least annually. New employees will not work in unsupervised positions until they have completed all training required for those positions. Supervisors will provide training to their employees and management will assure that supervisors are properly trained.
Employees with specific additional job related training needs will also be given that training, such as hazardous waste handling training as required by RCRA and State regulations, storm water pollution prevention, and waste water operations.
This training may be coordinated and take place concurrent with Hazard Communication and RCRA training, safety meetings, and annual updates.

APPENDIX A

OIL POLLUTION ACT
SUBSTANTIAL HARM CERTIFICATION

CERTIFICATION OF THE APPLICABILITY OF THE SUBSTANTIAL HARM CRITERIA PER 40 CFR 112.20

Facility Name: Koppers Industries, Inc.

Address: Tie Plant & 1 Koppers Drive
Tie Plant, Mississippi 38960

1. Does the facility transfer oil over water to or from vessels and does the facility have a total oil storage capacity greater than or equal to 42,000 gallons?
   Yes: No: **X**

2. Does the facility have a total oil storage capacity greater than or equal to 1 million gallons and does the facility lack secondary containment that is sufficiently large to contain the capacity of the largest aboveground oil storage tank plus sufficient freeboard to allow for precipitation within any aboveground oil storage tank area?
   Yes: No: **X**

3. Does the facility have a total oil storage capacity greater than or equal to 1 million gallons and is the facility located at a distance such that a discharge from the facility could cause injury to fish and wildlife and sensitive environments?
   Yes: No: **X**

4. Does the facility have a total oil storage capacity greater than or equal to 1 million gallons and is the facility located at a distance such that a discharge from the facility would shut down a pubic drinking water intake?
   Yes: No: **X**

5. Does the facility have a total oil storage capacity greater than or equal to 1 million gallons and has the facility experienced a reportable oil spill in an amount greater than or equal to 10,000 gallons within the last 5 years?
   Yes: No: **X**

Certification
I certify under penalty of law that I have personally examined and am familiar with the information submitted in this document, and that based on my inquiry of those individuals responsible for obtaining this information, I believe that the submitted information is true, accurate, and complete.

Signature: Thomas L. Henderson

Printed Name: Tom L. Henderson, Plant Manager Date: 6 / 27 / 2000

FIGURES

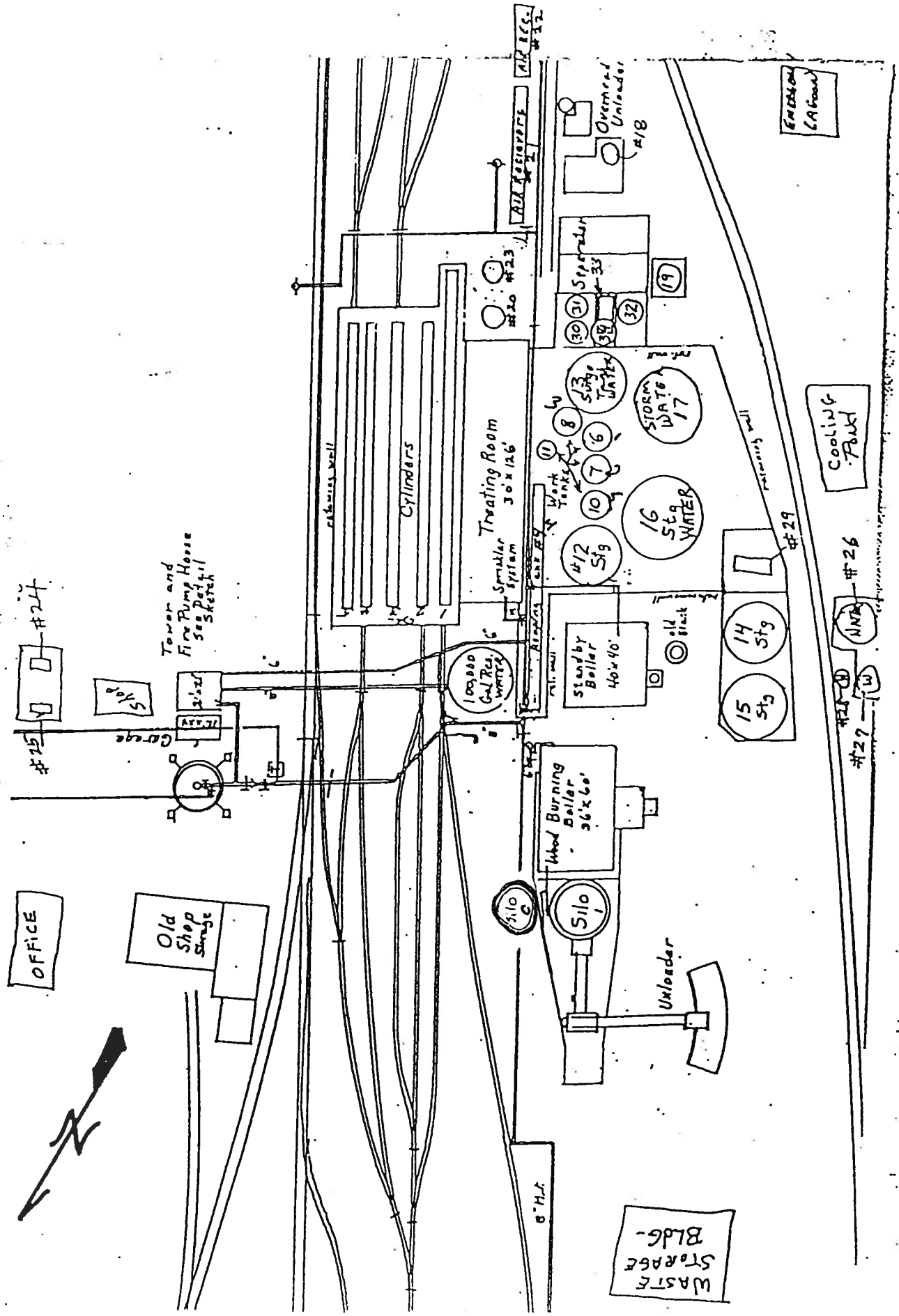

SITE PLAN

FIGURE 1

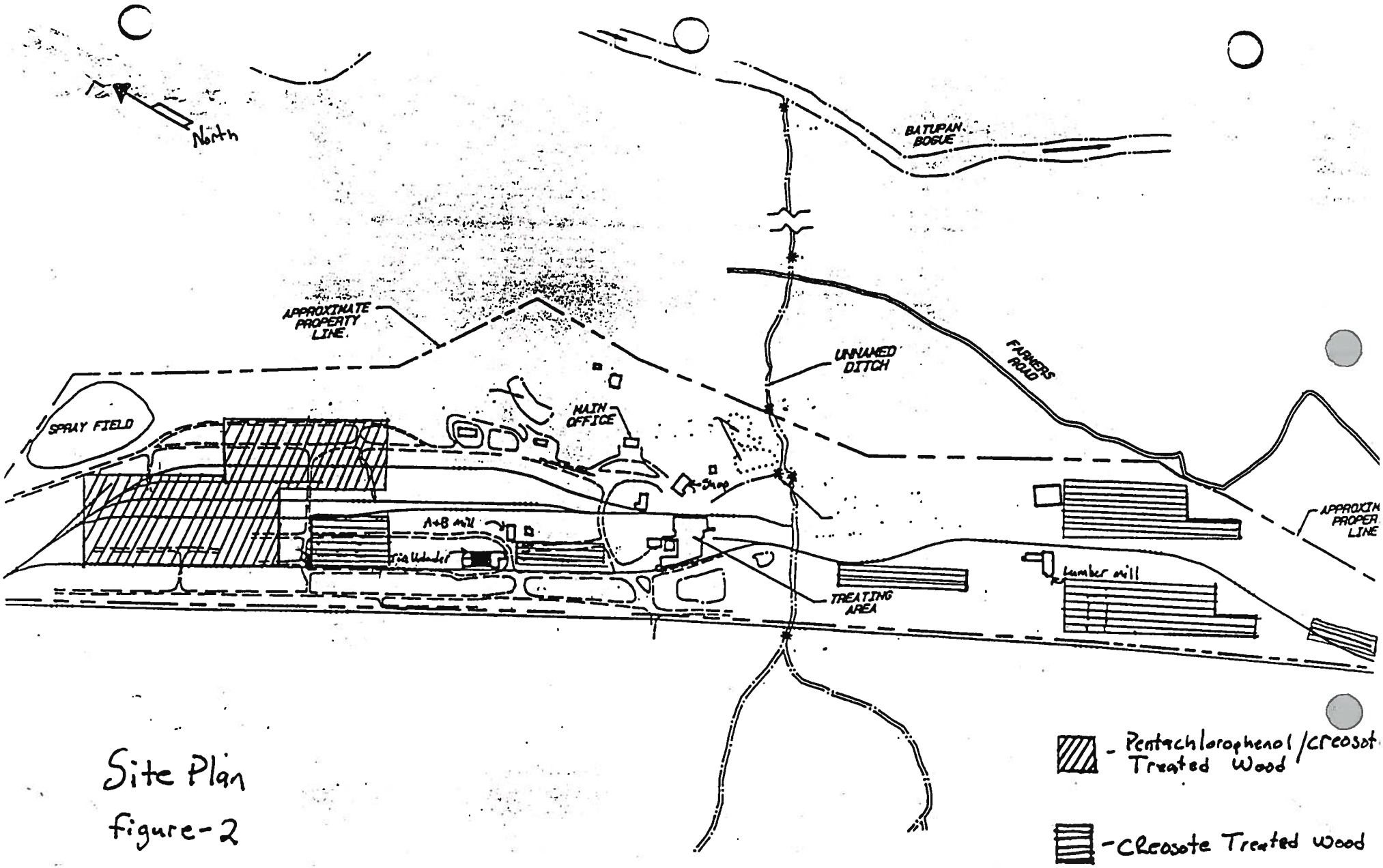

Site Plan

figure-2

APPENDIX B

STORM WATER MANAGEMENT FACILITIES INSPECTION RECORD BLANK FORM

STORM WATER MANAGEMENT
FACILITIES INSPECTION RECORD
KOPPERS INDUSTRIES, INC.

Plant: **Grenada, MS.** Year: 19 Page:

Inspector's Name	Initials

Legend
O - Indicates OK
X - Indicates a Problem
Note all problems, observations, and actions taken in Section II (back side) of Inspection Record

I. INSPECTION

DATE (m/d)->										
TIME (hr/min)->										
OUTFALL 001 -Ditches										
OUTFALL 002 -Pond and Outlet -Inflow Ditches										
OUTFALL 003 -Ditches										
OUTFALL 004 -Pond and Outlet -Inflow Ditches										
OUTFALL 005 -Pond and Outlet -Inflow Ditches										
OUTFALL 006 -Pond and Outlet -Inflow Ditches										
OUTALL 007 -Pond and Outlet -Inflow Ditches										
OUTFALL 008 -Pond and Outlet -Inflow Ditches										
OUTFALL 009 -Pond and Outlet -Inflow Ditches										
Inspector's Initials										

Frequency: Quarterly AND after significant storms.
Look for damage, debris, or erosion that indicates or could cause malfunction of outlet structure, excessive sedimentation in ponds, erosion or loss of vegetation, treated wood debris, sources of contamination or muddy water, damaged culverts, and general housekeeping.

II. OBSERVATIONS AND REMEDIAL ACTIONS

Date	Description	Initials

APPENDIX C

STORM WATER DISCHARGE EVALUATION AND CERTIFICATION MISSISSIPPI WORKSHEET #2c

Part VII.

Inspection Report and Certification Form For Storm Water Pollution Prevention Plan Evaluation

5

Owner and/o

Facility Nam

Facility Loca

Date and Tim

Inspector(s):

Date of Last

Deficiencies N

Corrective Ac

Corrective Act

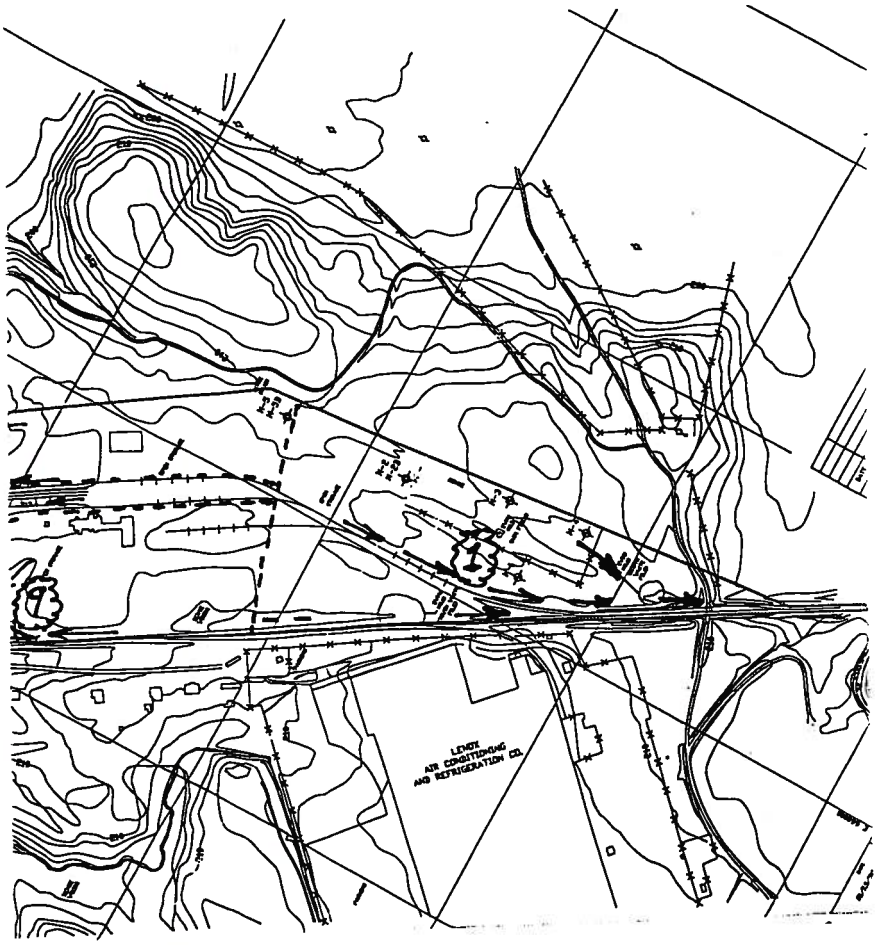

KOPPERS INDUSTRIES, INC.
GRENADA, MS.
STORM WATER MANAGEMENT PLAN

Based upon th at all pollution
control measu ncies noted above,
in accordance trol and good
engineering pr

I certify under tion or
supervision in and evaluate the
information su information, the
information su n aware that there
are significant sonment for
knowing violat

I further certif tinent to our
storm water pe

Authori Date

These reports shall be submitted annually, as required in the permit, to:

Chief, Industrial Branch
Office of Pollution Control
P.O. Box 10385
Jackson, Mississippi 39289-0385

MISSISSIPPI OFFICE OF POLLUTION CONTROL

NPDES PERMIT ADMINISTRATIVE RECORD CHECK LIST

FACILITY KOPPERS INDUSTRIES NPDES NO. MS0090300

TYPE OF PERMIT: NPDES:____ INDIVIDUAL SW:____ STATE:____ PRETREATMENT: X

DETERMINED TO BE: EXISTING SOURCE: X NEW SOURCE:____ MAJOR:____ MINOR:____

These documents must be present in the Administrative Record:

DOCUMENT	YES	DATE	INITIALS
1. Application and Attachments.....	X	5/25/93	BDC
2. Prepermitting Inspection Report....	X	2/3/95	BDC
3. Draft Permit.....	X	7/10/95	BDC
4. Fact Sheet and/or Rationale and Attachments.....	X	6/6/95	BDC
5. Public Notice.....	X	9/1/95	BDC
6. Proof of Publication.....		/ /	

These documents, if applicable, must be present in the Administrative Record:

DOCUMENT	YES	N/A	DATE
7. Other Documents (correspondence between State, EPA, and Applicant, telephone and meeting memoranda, compliance reports, etc.)	X		
LIST: INDUSTRY COMMENT			7/20/95
RATIONALE ADDENDUM			8/2/95
			/ /
8. New Source Determination & Comments.....		X	/ /
9. Public Comments Received & State Response..		X	/ /

These documents, if applicable, need not be physically present in the Administrative Record if specifically referenced and available in the Jackson Office:

DOCUMENT	YES	N/A	AVAILABLE ELSEWHERE	WHERE?
10. Environmental Assessment EIS and/or related documents.....		X		
11. Public Hearings - P.N. of Hearing, Statements, Tape or Transcript...		X		

These remaining documents must be present in the Administrative Record:

DOCUMENT	YES	DATE	INITIALS
12. Proof of Final Permit Board Action.....	X	11/14/95	BDC
13. Final Permit and Transmittal Letter.....	X	12/5/95	BDC
14. Certified Mail-Return Receipt.....		/ /	
15. PCS computer entry forms.....	X	/ /	BDC

CERTIFICATION: I have examined the referenced Administrative File and find the documents checked "yes" above are present in the file. Based on this examination, I certify that this file meets the Administrative Record Requirements of the current NPDES Regulations.

12/5/95 Bryan D. Collins

DATE PERMIT WRITER (RECORD CLERK)

In the case of a MAJOR DISCHARGER, the first line supervisor shall concur with the certification.

DATE SUPERVISOR

MISSISSIPPI ENVIRONMENTAL QUALITY PERMIT BOARD
OFFICE OF POLLUTION CONTROL - AGENDA
SURFACE WATER DIVISION
NOVEMBER 14, 1995

INDUSTRIAL - PRETREATMENT PERMIT ISSUANCE

passed	Dover Elevator Systems, Inc.	DeSoto/City of Memphis T. E. Maxson South Wastewater Plant	MSP091073
passed	Prestage Farms, Inc.	Clay/N/A	MSW-95-27 ~~MSP095230~~
passed	Double Quick, Inc.	Leflore/City of Greenwood POTW (MS0023833)	MSP091235
passed	Mississippi Baking Company	Rankin/Pelahatchie POTW (MS0021008)	MSP091193
passed	Armstrong World Industries, Inc.	Hinds/Jackson POTW (MS0024295)	MSP090736

INDUSTRIAL - PRETREATMENT PERMIT MODIFICATION

passed	Mueller Copper Fittings, Inc.	Itawamba/City of Fulton POTW (Southwest Sewage Treatment Facility) MS0028029	MSP091145

INDUSTRIAL - PRETREATMENT PERMIT REISSUANCE

passed	Process Engineering Company	Hinds/Jackson POTW (MS0024295) -> Pearl River	MSP090063
passed	Siemens Energy and Automation	Rankin/Jackson POTW (MS0024295) -> Pearl River	MSP090069
passed	Koppers Industries, Inc.	Grenada/Grenada POTW - MS0020397	MSP090300

INDUSTRIAL - STATE OPERATING PERMIT ISSUANCE

passed	Wayne Williams Poultry	Neshoba/Unnamed tributary of Pearl River if a discharge were to occur	95-293
passed	John Hays Poultry	Simpson/Uspoha Creek if a discharge were to occur	95-302

APPENDIX D

PROCESS EQUIPMENT INSPECTION RECORD

PROCESS EQUIPMENT INSPECTION RECORD
KOPPERS INDUSTRIES, INC.

Plant: **Grenada, MS.** Year: 19 Page:

Inspector's Name	Initials

Legend
O - Indicates OK
X - Indicates a Problem
Note all problems, observations, and actions taken in Section II of Inspection Record

I. INSPECTION

DATE (m/d)->										
TIME (hr/min)->										
TREATING PLANT -Treating cyl's.										
-Cylinder basement										
-Creosote & Penta tanks										
-Piping & Valves										
-Treating Room										
-Tank Car/Truck Unloading										
-Cooling Water Pond										
WASTE WATER TRM'T -Oil Water Separation										
-Biological Treatment Area										
HAZ. WASTE DRUM STORAGE										
FUEL & OIL TANKS										
SHOP AREA										
Inspector Initials										

Frequency: Weekly inspections
Look for leakage or damage that indicates or could cause malfunction of equipment, sources of contamination, and general housekeeping.

II. OBSERVATIONS AND REMEDIAL ACTIONS

Date	Description	Initials

(Continue on back of page if needed.)

State of Mississippi
Water Pollution Control
PERMIT

TO OPERATE A WASTE DISPOSAL SYSTEM IN ACCORDANCE WITH NATIONAL AND STATE PRETREATMENT STANDARDS

THIS CERTIFIES THAT

KOPPERS INDUSTRIES, INC.
GRENADA, MISSISSIPPI

has been granted permission to discharge wastewater into

Grenada POTW

in accordance with effluent limitations, monitoring requirements and other conditions set forth in this permit. This permit is issued in accordance with the provisions of the Mississippi Water Pollution Control Law (Section 49-17-1 et seq., Mississippi Code of 1972), and the regulations and standards adopted and promulgated thereunder, and under authority granted pursuant to Section 402(b) of the Federal Water Pollution Control Act.

The issuance of this permit does not relieve the permittee from complying with any requirements which the Publicly Owned Treatment Works (POTW) Authority may deem necessary as a prerequisite to the use of the Authority's sewage system and associated treatment works.

MISSISSIPPI ENVIRONMENTAL QUALITY PERMIT BOARD

ORIGINAL SIGNED BY
CHARLES CHISOLM

HEAD, OFFICE OF POLLUTION CONTROL
MISSISSIPPI DEPARTMENT OF ENVIRONMENTAL QUALITY

Issued: November 14, 1995

Expires: November 13, 2000

Permit No. MSP090300

PART I

A. PRETREATMENT LIMITATIONS AND MONITORING REQUIREMENTS

1. During the period beginning **November 14, 1995**, and lasting until **November 13, 2000**, the permittee is authorized to discharge from outfall(s) serial number(s) **001 (Total Facility Discharge)**.

   Such discharges shall be limited and monitored by the permittee as specified below:

PARAMETER	DISCHARGE LIMITATIONS				MONITORING REQUIREMENTS	
	kg/day (lbs/day)		Other Units (Specify)		Measurement	Sample
	Monthly Avg.	Daily Max.	Monthly Avg.	Daily Max.	Frequency	Type
Flow-M^3/day (MGD)	--	--	Report	(0.035)	Daily	Continuous
Biochemical Oxygen Demand (5-Day)	32(70)	63(140)	240 mg/l	480 mg/l	Once/Week	24-Hr. Composite
Total Suspended Solids	40(88)	79(175)	300 mg/l	600 mg/l	Once/Week	24-Hr. Composite
Total Phenols	.40(.88)	.79(1.75)	3 mg/l	6 mg/l	Once/Week	Grab
Pentachlorophenol	.024(.053)	.048(.105)	.18 mg/l	.36 mg/l	Once/Week	Grab
Oil and Grease	Report	13.2(29.2)	Report	100 mg/l	Once/Week	Grab
	kg/day (lbs/day)		Other Units (Specify)		Measurement	Sample
	Yearly Avg.	Yearly Max.	Yearly Avg.	Yearly Max.	Frequency	Type
Copper, Total Recoverable	Report	0.291(0.642)	Report	2.2 mg/l	Twice/Year	24-Hr. Composite
Chromium, Total Recoverable	Report	0.529(1.168)	Report	4.0 mg/l	Twice/Year	24-Hr. Composite
Arsenic, Total Recoverable	Report	0.060(0.131)	Report	.45 mg/l	Twice/Year	24-Hr. Composite

2. The pH shall not be less than 5.5 standard units nor greater than 9.5 standard units and shall be monitored twice per week with a grab sample of the effluent.

3. Samples taken in compliance with the monitoring requirements specified above shall be taken at the following location(s): the nearest accessible point after final treatment but prior to actual discharge into the POTW collection system or mixing with non-regulated wastewater streams.

B. SCHEDULE OF COMPLIANCE

1. The permittee shall achieve compliance with the effluent limitations specified for discharge in accordance with the following schedule:

   Upon permit issuance.

2. Within 14 days after either an interim or final date of compliance specified in Part I.B.1., the permittee shall provide the Permit Board with written notice of his compliance or noncompliance with the requirements or conditions specified to be completed by that date. Failure to submit the written notice to the Permit Board shall be considered a violation of the compliance requirements of the permit, for which the Commission may be asked to take enforcement action.

   N/A

C. GENERAL PRETREATMENT PROHIBITIONS

1. In addition to those pollutants limited in Part I.A., the following pollutants shall not be discharged into the POTW:

   a. Pollutants which create a fire or explosion hazard in the POTW, including but not limited to, wastestreams with a closed cup flashpoint of less than 140 degrees Fahrenheit or 60 degrees Centigrade using the test methods specified in 40 CFR 261.21;

   b. Pollutants which will cause corrosive structural damage to the POTW, but in no case discharges with pH lower than 5.0, unless the treatment works is specifically designed to accommodate such discharges;

   c. Solid or viscous pollutants in amounts which will cause obstruction to the flow in the POTW resulting in interference;

   d. Any pollutant, including oxygen demanding pollutants (BOD, etc.) released in a discharge at a flow rate and/or pollutant concentration which will cause interference with the POTW;

   e. Heat in amounts which will inhibit biological activity in the POTW resulting in interference, but in no case heat in such quantities that the temperature at the POTW treatment plant exceeds 40°C (104°F) unless the approval Authority, upon request of the POTW, approves alternate temperature limits;

   f. Petroleum oil, nonbiodegradable cutting oil, or products of mineral oil origin in amounts that will cause interference or pass through;

   g. Pollutants which result in the presence of toxic gases, vapors, or fumes within the POTW in a quantity that may cause acute worker health and safety problems;

   h. Any trucked or hauled pollutants, except at discharge points designated by the POTW.

D. ORAL NOTIFICATION REQUIREMENTS

The permittee shall notify the Mississippi Environmental Quality Permit Board and the POTW orally immediately upon becoming aware of the following:

1. A spill which would result in a discharge to the POTW or to State waters;

2. Any unanticipated bypass which exceeds any effluent limitation in the permit.

3. Any upset which exceeds any effluent limitation in the permit.

4. Violation of a maximum daily discharge limitation for any of the pollutants listed by the Permit Board in the permit to be reported within 24 hours.

PART II

A. MANAGEMENT REQUIREMENTS AND RESPONSIBILITIES

1. No Discharge of Wastewater to Surface Water

The discharge of any wastewater from this facility to the waters of the State of Mississippi shall constitute a violation of this permit, except as provided in Part II, A.4. and A.5. of this permit, or as authorized under separate permit pursuant to Section 402 of the Federal Water Pollution Control Act.

2. Change in Wastewater Source

Any facility expansion, production increases, process modifications, changes in discharge volume or location or other changes in operations or conditions of the permit which may result in a new or increased discharge of waste, shall be reported to the Permit Board by submission of a new application for a permit pursuant to Chapter One, Section II.A. of the State of Mississippi Wastewater Permit Regulations, or if the discharge does not violate effluent limitations specified in the permit, by submitting to the Permit Board a notice of a new or increased discharge.

3. Facilities Operation

The permittee shall at all times properly operate, maintain, and when necessary, promptly replace all facilities and systems of collection, treatment and control (and related appurtenances) which are installed or used by the permittee to achieve compliance with the conditions of this permit. Proper operation and maintenance includes adequate laboratory controls and appropriate quality assurance procedures. Proper replacement includes maintaining an adequate inventory of replacement equipment and parts for prompt replacement when necessary to maintain continuous collection and treatment of wastewater. This provision requires the operation of back-up or auxiliary facilities or similar systems which are installed by a permittee only when the operation is necessary to achieve compliance with the conditions of the permit. The Permit Board may require regular reporting of internal operational and maintenance parameter where necessary to confirm proper operation of a waste treatment system.

4. Bypassing 40 CFR 403.17

a. Definition. "Bypass" means the intentional diversion of wastestreams from any portion of the permittee's treatment facility.

b. Notice of Bypass.

(1) If the permittee knows in advance of the need for a bypass, it shall submit prior notice to the Permit Board, if possible at least ten days before the date of the bypass.

(2) The permittee shall submit oral notice of an unanticipated bypass that exceeds applicable Pretreatment Standards to the Permit Board within 24 hours from the time the permittee becomes aware of the bypass. A written submission shall also be provided within 5 days of the time the permittee becomes aware of the bypass. The written submission shall contain a description of the bypass and its cause; the duration of the bypass, including exact dates and times, and, if the bypass has not been corrected, the anticipated time it is expected to continue; and steps taken or planned to reduce, eliminate, and prevent recurrence of the bypass. The Permit Board may waive the written report on a case-by-case basis if the oral report has been received within 24 hours.

c. Prohibition of bypass. Bypass is prohibited, and the Permit Board may take enforcement action against the permittee for a bypass, unless;

(1) Bypass was unavoidable to prevent loss of life, personal injury, or severe property damage;

(2) There were no feasible alternatives to the bypass, such as the use of auxiliary treatment facilities, retention of untreated wastes, or maintenance during normal periods of equipment downtime. This condition is not satisfied if adequate back-up equipment should have been installed in the exercise of reasonable engineering judgement to prevent a bypass which occurred during normal period of equipment downtime or preventative maintenance; and

(3) The permittee submitted notices as required under paragraph (b) of this section.

5. Upsets 40 CFR 403.16

a. Definition. "Upset" means an exceptional incident in which there is unintentional and temporary noncompliance with categorical pretreatment standards because of factors beyond the reasonable control of the permittee. An upset does not include noncompliance to the extent caused by operational error, improperly designed treatment facilities, inadequate treatment facilities, lack of preventive maintenance, or careless or improper operation.

b. Effect of an upset. An upset constitutes an affirmative defense to an action brought for noncompliance with categorical pretreatment standards if the requirements of paragraph (c) of this section are met. No determination made during administrative review of claims that noncompliance was caused by upset, and before an action for noncompliance, is final administrative action subject to judicial review.

c. Conditions necessary for demonstration of upset. A permittee who wishes to establish the affirmative defense of upset shall demonstrate, through properly signed contemporaneous operating logs, or other relevant evidence that:

(1) An upset occurred and that the permittee can identify the cause(s) of the upset;

(2) The facility was at the time being properly operated in a prudent and workmanlike manner and in compliance with applicable operation and maintenance procedures; and

(3) The permittee submitted notice of the upset as required in 40 CFR 403.16 (c)(3) (24-hour notice of noncompliance).

d. Burden of proof. In any enforcement proceeding the permittee seeking to establish the occurrence of an upset has the burden of proof.

e. User responsibility in case of upset. The Industrial User shall control production or all discharges to the extent necessary to maintain compliance with categorical Pretreatment Standards upon reduction, loss, or failure of its treatment facility until the facility is restored or an alternative method of treatment is provided. This requirement applies in the situation where among other things, the primary source of power of the treatment facility is reduced, lost or fails.

6. Removed Substances

Solids, sludges, filter backwash, or other residuals removed in the course of treatment or control of wastewaters shall be disposed of in a manner such as to prevent such materials from entering State waters and in a manner consistent with the Mississippi Solid Waste Disposal Act, the Federal Resource Conservation and Recovery Act, and the Mississippi Water Pollution Control Act.

7. Duty to Mitigate

The permittee shall take all reasonable steps to minimize or prevent any discharge or sludge use or disposal in violation of the permit which has a reasonable likelihood of adversely affecting human health or the environment.

8. Power Failures

If electric power is required, in order to maintain compliance with the conditions and prohibitions of this permit, the permittee shall either:

a. Provide an alternative power source to operate the wastewater control facilities;

   or, if such alternative power source is not in existence, and no date for its implementation appears in this permit,

b. Halt, reduce, or otherwise control production and/or all wastewater flows upon reduction, loss, or failure of the primary source of power to the wastewater control facilities.

9. Compliance with Permit Conditions

All discharges authorized by the permit shall be consistent with the terms and conditions of the permit and the permittee shall make all reasonable efforts to meet any interim or final dates for compliance specified therein.

10. Facility Expansion and/or Modification

Any facility expansion, production increases, process modifications, changes in discharge volume or location or other changes in operations or conditions of the permittee which may result in a new or increased discharge of waste, shall be reported to the Permit Board by submission of a new application for a permit, or if the discharge does not violate effluent limitations specified in the permit, by submitting to the Permit Board a notice of a new or increased discharge.

B. MONITORING, REPORTING, AND RECORDKEEPING

1. Routine Reporting

Such test results, reports, or other data as the Mississippi Environmental Quality Permit Board may determine to be necessary shall be submitted on a regular basis to the following address:

MISSISSIPPI DEPARTMENT OF ENVIRONMENTAL QUALITY
OFFICE OF POLLUTION CONTROL
P. O. Box 10385
Jackson, Mississippi 39289-0385

2. Duty to Provide Information

The permittee shall furnish to the Permit Board, within a reasonable time, any information which the Permit Board may request to determine whether cause exists for modifying, revoking and reissuing, or terminating the permit or to determine compliance with the permit. The permittee shall also furnish to the Permit Board upon request, copies of records required to be kept by the permit.

3. Test Procedures

Testing procedures for the analysis of pollutants for all permits include those set forth in 40 CFR 136 which is incorporated herein and adopted by reference or alternative procedures approved and/or promulgated by EPA.

4. Representative Sampling

Samples and measurements taken as required herein shall be representative of the volume and nature of the monitored wastewater.

5. Recording of Results

A permittee required to monitor a waste discharge pursuant to Chapter One, Section IV.A.28. of the State of Mississippi Wastewater Permit Regulations shall maintain records of all information obtained from such monitoring, including:

a. The exact place, date, and time of sampling;
b. The dates the analyses were performed;
c. The person(s) who performed the analyses;
d. The analytical techniques, procedures or methods used; and
e. The results of all required analyses.

6. Records Retention

   a. All records and results of monitoring activities, including calibration and maintenance records, shall be retained by the permittee a minimum of three (3) years unless otherwise required or extended by the Permit Board, copies of which shall be furnished to the Department upon request.

   b. The permittee shall furnish to the Permit Board upon request, copies of records required to be kept by this permit.

7. Falsifying Reports

   Any permittee who falsifies, tampers with, or knowingly renders inaccurate any monitoring device or method required by the Permit Board to be maintained as a condition in a permit, or who alters or falsifies the results obtained by such devices or methods and/or any written report required by or in response to a permit condition, shall be deemed to have violated a permit condition and shall be subject to the penalties provided for a violation of a permit condition pursuant to Section 49-17-43 of the Code.

8. Noncompliance Reporting

   a. The permittee shall report any noncompliance which may endanger health or the environment. Any information shall be provided orally within 24 hours from the time the permittee becomes aware of the circumstances. A written submission shall also be provided within 5 days of the time the permittee becomes aware of the circumstances. The written submission shall contain a description of the noncompliance and its cause; the period of noncompliance, including exact dates and times, and if the noncompliance has not been corrected, the anticipated time it is expected to continue; and steps taken or planned to reduce, eliminate, and/or prevent recurrence of the noncompliance.

   b. The following shall be included as information which must be reported within 24 hours under this paragraph.

      (1) Any unanticipated bypass which exceeds any effluent limitation in the permit.

      (2) Any upset which exceeds any effluent limitation in the permit.

      (3) Violation of a maximum daily discharge limitation for any of the pollutants listed by the Permit Board in the permit to be reported within 24 hours.

   c. The Executive Director may waive the written report on a case-by-case basis for reports under paragraph a. of this section if the oral report has been received within 24 hours.

9. Other Noncompliance

The permittee shall report all instances of noncompliance not reported under Part I.D or Part II.B.6, at the time monitoring reports are submitted or within 30 days from the end of the month in which the noncompliance occurs. The reports shall contain the information listed in Part II.B.6.

10. Right of Entry

The permittee shall allow the Mississippi Environmental Quality Permit Board and/or their authorized representatives, upon the presentation of credentials:

a. To enter upon the permittee's premises where a wastewater source is located or in which records are required to be kept under the terms and conditions of this permit; and

b. At reasonable times to have access to and copy any records required to be kept under the terms and conditions of this permit; to inspect any monitoring equipment or monitoring method required in this permit; and to sample any wastewater generated at this facility.

c. In the event of investigation during an emergency response action, a reasonable time shall be any time of the day or night.

11. Transfer of Ownership or Control

This permit is not transferable to any person except after proper notice and approval by the Permit Board. In the event of any change in control or ownership of facilities, the permittee shall notify the Mississippi Environmental Quality Permit Board at least thirty (30) days in advance of the proposed transfer date. The notice should include a written agreement between the existing and new permittees containing a specific date for the transfer of permit responsibility, coverage, and liability.

12. Signatory Requirements 40 CFR 403.12(l)

All applications, reports, or information submitted to the Permit Board shall be signed and certified.

a. All permit applications shall be signed as follows:

(1) For a corporation: by a responsible corporate officer. For the purpose of this Section, a responsible corporate officer means: (1) a president, secretary, treasurer or vice president of the corporation in charge of a principal business function, or any other person who performs similar policy - or decision-making function for the corporation, or (2) the manager of one or more manufacturing, production, or operating facilities employing more than 250 persons or having gross annual sales or expenditures exceeding 25 million (in second quarter 1980 dollars), if authority to sign documents has been assigned or delegated to the manager in accordance with corporate procedures.

(2) For a partnership or sole proprietorship: by a general partner or the proprietor, respectively; or

(3) For a municipality, State, Federal, or other public agency: by either a principal executive officer or ranking elected official.

b. All reports required by the permit and other information requested by the Permit Board shall be signed by a person described above or by a duly authorized representative of that person. A person is a duly authorized representative only if:

(1) The authorization is made in writing by a person described above;

(2) The authorization specifies either an individual or a position having responsibility for the overall operation of the regulated facility or activity, such as the position of plant manager, operator of a well or a well field, superintendent,. position having overall responsibility for environmental matters for the company. (A duly authorized representative may thus be either a named individual or any individual occupying a named position.); and

(3) The written authorization is submitted to the Permit Board.

c. Changes to authorization. If an authorization under paragraph (b) of this section is no longer accurate because a different individual or position has responsibility for the overall operation of the facility, a new authorization satisfying the requirements of paragraph (b) of this section must be submitted to the Permit Board prior to or together with any reports, information, or applications.

d. Certification. Any person signing a document under paragraphs (a) or (b) of this section shall make the following certification:

"I certify under penalty of law that this document and all attachments were prepared under the direction or supervision in accordance with a system designed to assure that qualified personnel properly gather and evaluate the information submitted. Based on my inquiry of the person or persons who manage the system, or those persons directly responsible for gathering the information, the information submitted is, to the best of my knowledge and belief, true, accurate, and complete. I am aware that there are significant penalties for submitting false information, including the possibility of fine and imprisonment for knowing violations."

13. Other Information

Where the permittee becomes aware that it failed to submit any relevant facts in a permit application, or submitted incorrect information in a permit application or in any report to the Permit Board, it shall promptly submit such facts or information.

14. Availability of Records

Except for data determined to be confidential under the Mississippi Air and Water Pollution Control Law, all reports prepared in accordance with the terms of this permit shall be available for public inspection at the offices of the Mississippi Office of Pollution Control.

15. Permit Modification

a. The permittee shall furnish to the Permit Board within a reasonable time any relevant information which the Permit Board may request to determine whether cause exists for modifying, revoking and reissuing, or terminating the permit, or to determine compliance with the permit.

b. The permit may be modified, revoked and reissued, or terminated for cause.

c. The filing of a request by the permittee for a permit modification, revocation and reissuance, or termination, or a notification of planned changes or anticipated noncompliance, does not stay any permit condition.

16. Property Rights

The issuance of this permit does not convey any property rights in either real or personal property, or any exclusive privileges, nor does it authorize any injury to private property or any invasion of personal rights, nor any infringement of Federal, State, or local laws or regulations.

17. Oil and Hazardous Substance Liability

Nothing in this permit shall be construed to preclude the institution of any legal action or relieve the permittee from any responsibilities, liabilities, or penalties to which the permittee is or may be subject to under Section 311 of the Federal Water Pollution Control Act or the applicable provisions under Mississippi Law pertaining to the transportation, storage, treatment, or spillage of oil or hazardous substances.

18. Hazardous Waste Release

a. The permittee shall notify the Mississippi Department of Environmental Quality, the EPA Regional Waste Management Division Director, State hazardous waste authorities, and the POTW in writing of any discharge into the POTW of a substance, which, if otherwise disposed of, would be a hazardous waste under 40 CFR part 261. Such notification must include the name of the hazardous waste as set forth in 40 CFR part 261, the EPA hazardous waste number, and the type of discharge (continuous, batch, or other). If the Industrial User discharges more than 100 kilograms of such waste per calendar month to the POTW, the notification shall also contain the following information to the extent such information is known and readily available to the Industrial User: An identification of the hazardous constituents contained in the wastes, as estimation of the mass and concentration of such constituents in the wastestream discharged during that calendar month, and an estimation of the mass of constituents in the wastestream expected to be discharged during the following twelve months. All notifications must take place within 180 days of the effective date of this rule. Industrial users who commence discharging after the effective date of this rule shall provide the notification no later than 180 days after the discharge of the listed or characteristic hazardous waste. Any notification under this paragraph need be submitted only once. However, notifications of changed discharges must be submitted under 40 CFR 403.12(j). The notification requirement in this section does not apply to pollutants already reported under the self-monitoring requirements of 40 CFR 403.12(b), (d), and (e).

b. Dischargers are exempt from the requirements of paragraph a. of this section during a calendar month in which they discharge no more than fifteen kilograms of hazardous wastes, unless the wastes are acute hazardous wastes as specified in 40 CFR 261.30(d) and 261.33(d). Discharge of more than fifteen kilograms of non-acute hazardous wastes in a calendar month, or of any quantity of acute hazardous wastes as specified in 40 CFR 261.30(d) and 261.33(e), requires a one-time notification. Subsequent months during which the Industrial User discharges more than such quantities of any hazardous waste do not require additional notification.

c. In the case of any new regulations under section 3001 of RCRA identifying additional characteristics of hazardous waste or listing any additional substance as a hazardous waste, the Industrial User must notify the POTW, the EPA Regional Waste Management Division Director, and State hazardous waste authorities of the discharge of such substance within 90 days of the effective date of such regulations.

d. In the case of any notification made under paragraph a. of this section, the Industrial User shall certify that it has a program in place to reduce the volume and toxicity of hazardous wastes generated to the degree it has determined to be economically practical.

19. Severability

The provisions of this permit are severable. If any provision of this permit, or the application of any provision of this permit to any circumstances, is challenged or held invalid, the validity of the remaining permit provisions and/or portions thereof or their application to other persons or sets of circumstances, shall not be affected thereby.

20. Closure Requirements

Should the permittee decide to permanently close and abandon the premises upon which it operates, it shall so notify the Permit Board no later than 90 days prior to doing so. This Closure Plan shall address how and when all manufactured products, by-products, raw materials, stored chemicals, and solid and liquid waste and residues will be removed from the premises so that no potential environmental hazard to the waters of the State will be presented.

21. Submittal of Discharge Monitoring Results

Monitoring reports. Monitoring results shall be reported at the intervals specified in the permit.

a. Monitoring results must be reported on a Discharge Monitoring Report (DMR) and/or forms provided or specified by the Permit Board for reporting results of monitoring, of sludge use or disposal practices.

b. If the permittee monitors any pollutant as prescribed in the permit more frequently than required by the permit using test procedures approved under 40 CFR Part 136 or, in the case of sludge use or disposal, approved under 40 CFR Part 136 unless otherwise specified in 40 CFR Part 503, or as specified in the permit, the results of this monitoring shall be included in the calculation and reporting of the data submitted in the DMR or sludge reporting form specified by the Permit Board.

c. Calculations for all limitations which require averaging of measurements shall utilize an arithmetic mean unless otherwise specified by the Permit Board in the permit.

d. If the results for a given sample analysis are such that any parameter (other than fecal coliform) is not detected at or above the minimum level for the test method used, a value of zero will be used for that sample in calculating an arithmetic mean value for the parameter. If the resulting calculated arithmetic mean value for that reporting period is zero, the permittee shall report "NODI = B" on the DMR. For fecal coliform, a value of 1.0 shall be used in calculating the geometric mean. If the resulting fecal coliform mean value is 1.0, the permittee shall report "NODI = B" on the DMR. For each quantitative sample value that is not detectable, the test method used and the minimum level for that method for that parameter shall be attached to and submitted with the DMR. The permittee shall then be considered in compliance with the appropriate effluent limitation and/or reporting requirement.

e. Monitoring results obtained during the month shall be summarized and reported on a Discharge Monitoring Report Form (EPA No. 3320-1), postmarked no later than the 28th day of the following month. The first report is due on **January 28, 1996**. Copies of this, and any other reports required herein, shall be signed in accordance with Chapter One, Sections II.C and II.E of the State of Mississippi Wastewater Permit Regulations, and shall be submitted to the Mississippi Environmental Quality Permit Board at the following address:

MISSISSIPPI DEPARTMENT OF ENVIRONMENTAL QUALITY
OFFICE OF POLLUTION CONTROL
P. O. Box 10385
Jackson, Mississippi 39289-0385

22. Expiration of Permit

At least 180 days prior to the expiration date of this permit pursuant to the State law and regulation, the permittee who wishes to continue to operate under this permit shall submit an application to the Permit Board for reissuance. The Permit Board may grant permission to submit an application later than this, but no later than the expiration date of the permit.

23. Civil and Criminal Liability

a. Any person who violates a term, condition or schedule of compliance contained within this permit or the Mississippi Water Pollution Control Law is subject to the actions defined by law.

b. Except as provided in permit conditions on "Bypassing" and "Upsets" (Part II, A-4 and 5), nothing in this permit shall be construed to relieve the permittee from civil or criminal penalties for noncompliance.

c. It shall not be the defense of the permittee in an enforcement action that it would have been necessary to halt or reduce the permitted activity in order to maintain compliance with the conditions of this permit.

24. Protection of Confidential Information

a. Pursuant to Miss. Code Ann. § 49-17-39 and 40 CFR 123.41, the Permit Board shall make available to the public all information contained on any form and all public comments on such information. Effluent data and information concerning air or water quality shall also be made available to the public. Information that is determined by the Commission to be trade secrets shall not be disclosed to the public without prior consent of the source of such information. When a claim of confidentiality is made by a person in accordance with the provisions of Miss. Code Ann. § 49-17-39, a recommendation on the questions of confidentiality shall be made by the Commission and forwarded to the Regional Administrator (or his/her designee) of EPA for his concurrence in such determination of confidentiality.

b. A copy of a State, UIC, or NPDES permit application, public notice, fact sheet, draft permit and other forms relating thereto, including written public comment and other reports, files and information relating to the application not classified as confidential information by the Commission pursuant to Part II.B.21.a., shall be available for public inspection and copying during normal business hours at the office of the Department in Jackson, Mississippi.

c. Upon determination by the Commission that information submitted by a permit applicant is entitled to protection against disclosure as trade secrets, the information shall be so labeled and otherwise handled as confidential. Copies of the information and a notice of the Commission's action shall be forwarded to the Regional Administrator (or his/her designee). In making its determination of entitlement to protection as a trade secret, the Commission shall follow the procedure set forth in Miss. Code Ann. § 49-17-39. In the event the Commission denies the claim of confidentiality, the applicant shall have, upon notification thereof, the right to appeal the Commission's determination in the same manner provided for other orders of the Commission. No disclosure, except to EPA, shall be allowed until any appeal from the determination of the Commission is completed.

25. Spill Prevention and Best Management Plans

Any permittee which has above ground bulk storage capacity, of more than 1320 gallons or any single container with a capacity greater than 660 gallons, of materials and/or liquids (including but not limited to, all raw, finished and/or waste material) with chronic or acute potential for pollution impact on waters of the State shall comply with the following conditions to prevent the potential release of these materials and storm water contaminated with these materials:

a. Bulk storage not subject to Hazardous Waste Management Regulations or 40 CFR 112 (Oil Pollution Prevention) regulations shall be provided with secondary containment as found in 40 CFR 112 or equivalent protective measures;

b. A Spill Prevention Control and Countermeasures (SPCC) Plan or Best Management Practices (BMP) Plan shall be maintained for any bulk storage subject to these requirements;

c. Tank systems, not necessarily classified as bulk storage, are also subject to the conditions above.

26. Definitions

a. "Monthly average" means the average of "daily discharges" over a calendar month, calculated as the sum of all "daily discharges" measured during a calendar month divided by the number of "daily discharges" measured during the month. The monthly average for fecal coliform bacteria is the geometric mean of "daily discharges" measured during the calendar month. In computing the geometric mean for fecal coliform bacteria, the value one (1) shall be substituted for sample results of zero.

b. "Weekly average" means the average of "daily discharges" over a calendar week, calculated as the sum of all "daily discharges" measured during a calendar week divided by the number of "daily discharges" measured during that week. The weekly average for fecal coliform bacteria is the geometric mean of all "daily discharges" measured in a calendar week. In computing the geometric mean for fecal coliform bacteria, one (1) shall be substituted for sample results of zero. For self-monitoring purposes, the value to be reported is the single highest weekly average computed during a calendar month.

c. "Daily maximum" means the highest "daily discharge" over a calendar month.

d. "Monthly maximum" means the highest "daily discharge" over a calendar month.

e. "Yearly average" means the average of "daily discharges" over a calendar year, calculated as the sum of all "daily discharges" measured during the calendar year divided by the number of "daily discharges" measured during the calendar year. The yearly average for fecal coliform bacteria is the geometric mean of "daily discharges" during the calendar year. In computing the geometric mean for fecal coliform bacteria, the value one (1) shall be substituted for sample results of zero.

f. "Yearly maximum" means the highest "daily discharge" measured over a calendar year.

g. "Toxic pollutants" include, but are not limited to: (a) any toxic substance listed in Section 307(a)(1) of the Clean Water Act (CWA), any chemical listed in Section 313(c) of the Superfund Amendments and Reauthorization Act of 1986; and (b) any substance (that is not also a conventional or nonconventional pollutant) for which EPA or the State has published an acute or chronic toxicity criterion.

h. "Hazardous substances" are defined in 40 CFR 116.4.

27. Other Specific Pretreatment Requirements

a. The permittee shall report the production rate for the process which generates the wastewater discharge as required by 40 CFR 403.12(è)(3).

State of Mississippi
Water Pollution Control
PERMIT

TO OPERATE A WASTE DISPOSAL SYSTEM IN ACCORDANCE WITH NATIONAL AND STATE PRETREATMENT STANDARDS

THIS CERTIFIES THAT

KOPPERS INDUSTRIES, INC.
GRENADA, MISSISSIPPI

has been granted permission to discharge wastewater into

Grenada POTW

in accordance with effluent limitations, monitoring requirements and other conditions set forth in this permit. This permit is issued in accordance with the provisions of the Mississippi Water Pollution Control Law (Section 49-17-1 et seq., Mississippi Code of 1972), and the regulations and standards adopted and promulgated thereunder, and under authority granted pursuant to Section 402(b) of the Federal Water Pollution Control Act.

The issuance of this permit does not relieve the permittee from complying with any requirements which the Publicly Owned Treatment Works (POTW) Authority may deem necessary as a prerequisite to the use of the Authority's sewage system and associated treatment works.

MISSISSIPPI ENVIRONMENTAL QUALITY PERMIT BOARD

Charles Chisolm

HEAD, OFFICE OF POLLUTION CONTROL
MISSISSIPPI DEPARTMENT OF ENVIRONMENTAL QUALITY

Issued: November 14, 1995

Expires: November 13, 2000

Permit No. MSP090300

PART I

A. PRETREATMENT LIMITATIONS AND MONITORING REQUIREMENTS

1. During the period beginning , and lasting until , the permittee is authorized to discharge from outfall(s) serial number(s) 001 (Total Facility Discharge).

   Such discharges shall be limited and monitored by the permittee as specified below:

PARAMETER	DISCHARGE LIMITATIONS				MONITORING REQUIREMENTS	
	kg/day (lbs/day)		Other Units (Specify)			
	Monthly Avg.	Daily Max.	Monthly Avg.	Daily Max.	Measurement Frequency	Sample Type
Flow-M^3/day (MGD)	--	--	Report	(0.035)	Daily	Continuous
Biochemical Oxygen Demand (5-Day)	32(70)	63(140)	240 mg/l	480 mg/l	Once/Week	24-Hr. Composite
Total Suspended Solids	40(88)	79(175)	300 mg/l	600 mg/l	Once/Week	24-Hr. Composite
Total Phenols	.40(.88)	.79(1.75)	3 mg/l	6 mg/l	Once/Week	Grab
Pentachlorophenol	.024(.053)	.048(.105)	.18 mg/l	.36 mg/l	Once/Week	Grab
Oil and Grease	Report	13.2(29.2)	Report	100 mg/l	Once/Week	Grab
	kg/day (lbs/day)		Other Units (Specify)			
	Yearly Avg.	Yearly Max.	Yearly Avg.	Yearly Max.	Measurement Frequency	Sample Type
Copper, Total Recoverable	Report	0.291(0.642)	Report	2.2 mg/l	Twice/Year	24-Hr. Composite
Chromium, Total Recoverable	Report	0.529(1.168)	Report	4.0 mg/l	Twice/Year	24-Hr. Composite
Arsenic, Total Recoverable	Report	0.060(0.131)	Report	.45 mg/l	Twice/Year	24-Hr. Composite

2. The pH shall not be less than 5.5 standard units nor greater than 9.5 standard units and shall be monitored twice per week with a grab sample of the effluent.

3. Samples taken in compliance with the monitoring requirements specified above shall be taken at the following location(s): the nearest accessible point after final treatment but prior to actual discharge into the POTW collection system or mixing with non-regulated wastewater streams.

DRAFT FOR
PUBLIC NOTICE
DATE: 8/22/95

State of Mississippi
Water Pollution Control
PERMIT

TO OPERATE A WASTE DISPOSAL SYSTEM IN ACCORDANCE WITH NATIONAL AND STATE PRETREATMENT STANDARDS

THIS CERTIFIES THAT

KOPPERS INDUSTRIES, INC.
GRENADA, MISSISSIPPI

has been granted permission to discharge wastewater into

Grenada POTW

in accordance with effluent limitations, monitoring requirements and other conditions set forth in this permit. This permit is issued in accordance with the provisions of the Mississippi Water Pollution Control Law (Section 49-17-1 et seq., Mississippi Code of 1972), and the regulations and standards adopted and promulgated thereunder, and under authority granted pursuant to Section 402(b) of the Federal Water Pollution Control Act.

The issuance of this permit does not relieve the permittee from complying with any requirements which the Publicly Owned Treatment Works (POTW) Authority may deem necessary as a prerequisite to the use of the Authority's sewage system and associated treatment works.

MISSISSIPPI ENVIRONMENTAL QUALITY PERMIT BOARD

_____

HEAD, OFFICE OF POLLUTION CONTROL
MISSISSIPPI DEPARTMENT OF ENVIRONMENTAL QUALITY

Issued:

Expires:

Permit No. MSP090300

B. SCHEDULE OF COMPLIANCE

1. The permittee shall achieve compliance with the effluent limitations specified for discharge in accordance with the following schedule:

   Upon permit issuance.

2. Within 14 days after either an interim or final date of compliance specified in Part I.B.1., the permittee shall provide the Permit Board with written notice of his compliance or noncompliance with the requirements or conditions specified to be completed by that date. Failure to submit the written notice to the Permit Board shall be considered a violation of the compliance requirements of the permit, for which the Commission may be asked to take enforcement action.

   N/A

C. GENERAL PRETREATMENT PROHIBITIONS

1. In addition to those pollutants limited in Part I.A., the following pollutants shall not be discharged into the POTW:

   a. Pollutants which create a fire or explosion hazard in the POTW, including but not limited to, wastestreams with a closed cup flashpoint of less than 140 degrees Fahrenheit or 60 degrees Centigrade using the test methods specified in 40 CFR 261.21;

   b. Pollutants which will cause corrosive structural damage to the POTW, but in no case discharges with pH lower than 5.0, unless the treatment works is specifically designed to accommodate such discharges;

   c. Solid or viscous pollutants in amounts which will cause obstruction to the flow in the POTW resulting in interference;

   d. Any pollutant, including oxygen demanding pollutants (BOD, etc.) released in a discharge at a flow rate and/or pollutant concentration which will cause interference with the POTW;

   e. Heat in amounts which will inhibit biological activity in the POTW resulting in interference, but in no case heat in such quantities that the temperature at the POTW treatment plant exceeds 40°C (104°F) unless the approval Authority, upon request of the POTW, approves alternate temperature limits;

   f. Petroleum oil, nonbiodegradable cutting oil, or products of mineral oil origin in amounts that will cause interference or pass through;

   g. Pollutants which result in the presence of toxic gases, vapors, or fumes within the POTW in a quantity that may cause acute worker health and safety problems;

   h. Any trucked or hauled pollutants, except at discharge points designated by the POTW.

D. ORAL NOTIFICATION REQUIREMENTS

The permittee shall notify the Mississippi Environmental Quality Permit Board and the POTW orally immediately upon becoming aware of the following:

1. A spill which would result in a discharge to the POTW or to State waters;

2. Any unanticipated bypass which exceeds any effluent limitation in the permit.

3. Any upset which exceeds any effluent limitation in the permit.

4. Violation of a maximum daily discharge limitation for any of the pollutants listed by the Permit Board in the permit to be reported within 24 hours.

PART II

A. MANAGEMENT REQUIREMENTS AND RESPONSIBILITIES

1. No Discharge of Wastewater to Surface Water

The discharge of any wastewater from this facility to the waters of the State of Mississippi shall constitute a violation of this permit, except as provided in Part II, A.4. and A.5. of this permit, or as authorized under separate permit pursuant to Section 402 of the Federal Water Pollution Control Act.

2. Change in Wastewater Source

Any facility expansion, production increases, process modifications, changes in discharge volume or location or other changes in operations or conditions of the permit which may result in a new or increased discharge of waste, shall be reported to the Permit Board by submission of a new application for a permit pursuant to Chapter One, Section II.A. of the State of Mississippi Wastewater Permit Regulations, or if the discharge does not violate effluent limitations specified in the permit, by submitting to the Permit Board a notice of a new or increased discharge.

3. Facilities Operation

The permittee shall at all times properly operate, maintain, and when necessary, promptly replace all facilities and systems of collection, treatment and control (and related appurtenances) which are installed or used by the permittee to achieve compliance with the conditions of this permit. Proper operation and maintenance includes adequate laboratory controls and appropriate quality assurance procedures. Proper replacement includes maintaining an adequate inventory of replacement equipment and parts for prompt replacement when necessary to maintain continuous collection and treatment of wastewater. This provision requires the operation of back-up or auxiliary facilities or similar systems which are installed by a permittee only when the operation is necessary to achieve compliance with the conditions of the permit. The Permit Board may require regular reporting of internal operational and maintenance parameter where necessary to confirm proper operation of a waste treatment system.

4. Bypassing 40 CFR 403.17

   a. Definition. "Bypass" means the intentional diversion of wastestreams from any portion of the permittee's treatment facility.

b. Notice of Bypass.

(1) If the permittee knows in advance of the need for a bypass, it shall submit prior notice to the Permit Board, if possible at least ten days before the date of the bypass.

(2) The permittee shall submit oral notice of an unanticipated bypass that exceeds applicable Pretreatment Standards to the Permit Board within 24 hours from the time the permittee becomes aware of the bypass. A written submission shall also be provided within 5 days of the time the permittee becomes aware of the bypass. The written submission shall contain a description of the bypass and its cause; the duration of the bypass, including exact dates and times, and, if the bypass has not been corrected, the anticipated time it is expected to continue; and steps taken or planned to reduce, eliminate, and prevent recurrence of the bypass. The Permit Board may waive the written report on a case-by-case basis if the oral report has been received within 24 hours.

c. Prohibition of bypass. Bypass is prohibited, and the Permit Board may take enforcement action against the permittee for a bypass, unless;

(1) Bypass was unavoidable to prevent loss of life, personal injury, or severe property damage;

(2) There were no feasible alternatives to the bypass, such as the use of auxiliary treatment facilities, retention of untreated wastes, or maintenance during normal periods of equipment downtime. This condition is not satisfied if adequate back-up equipment should have been installed in the exercise of reasonable engineering judgement to prevent a bypass which occurred during normal period of equipment downtime or preventative maintenance; and

(3) The permittee submitted notices as required under paragraph (b) of this section.

5. Upsets 40 CFR 403.16

a. Definition. "Upset" means an exceptional incident in which there is unintentional and temporary noncompliance with categorical pretreatment standards because of factors beyond the reasonable control of the permittee. An upset does not include noncompliance to the extent caused by operational error, improperly designed treatment facilities, inadequate treatment facilities, lack of preventive maintenance, or careless or improper operation.

b. Effect of an upset. An upset constitutes an affirmative defense to an action brought for noncompliance with categorical pretreatment standards if the requirements of paragraph (c) of this section are met. No determination made during administrative review of claims that noncompliance was caused by upset, and before an action for noncompliance, is final administrative action subject to judicial review.

c. Conditions necessary for demonstration of upset. A permittee who wishes to establish the affirmative defense of upset shall demonstrate, through properly signed contemporaneous operating logs, or other relevant evidence that:

(1) An upset occurred and that the permittee can identify the cause(s) of the upset;

(2) The facility was at the time being properly operated in a prudent and workmanlike manner and in compliance with applicable operation and maintenance procedures; and

(3) The permittee submitted notice of the upset as required in 40 CFR 403.16 (c)(3) (24-hour notice of noncompliance).

d. Burden of proof. In any enforcement proceeding the permittee seeking to establish the occurrence of an upset has the burden of proof.

e. User responsibility in case of upset. The Industrial User shall control production or all discharges to the extent necessary to maintain compliance with categorical Pretreatment Standards upon reduction, loss, or failure of its treatment facility until the facility is restored or an alternative method of treatment is provided. This requirement applies in the situation where among other things, the primary source of power of the treatment facility is reduced, lost or fails.

6. Removed Substances

Solids, sludges, filter backwash, or other residuals removed in the course of treatment or control of wastewaters shall be disposed of in a manner such as to prevent such materials from entering State waters and in a manner consistent with the Mississippi Solid Waste Disposal Act, the Federal Resource Conservation and Recovery Act, and the Mississippi Water Pollution Control Act.

7. Duty to Mitigate

The permittee shall take all reasonable steps to minimize or prevent any discharge or sludge use or disposal in violation of the permit which has a reasonable likelihood of adversely affecting human health or the environment.

8. Power Failures

If electric power is required, in order to maintain compliance with the conditions and prohibitions of this permit, the permittee shall either:

a. Provide an alternative power source to operate the wastewater control facilities;

   or, if such alternative power source is not in existence, and no date for its implementation appears in this permit,

b. Halt, reduce, or otherwise control production and/or all wastewater flows upon reduction, loss, or failure of the primary source of power to the wastewater control facilities.

9. Compliance with Permit Conditions

All discharges authorized by the permit shall be consistent with the terms and conditions of the permit and the permittee shall make all reasonable efforts to meet any interim or final dates for compliance specified therein.

10. Facility Expansion and/or Modification

Any facility expansion, production increases, process modifications, changes in discharge volume or location or other changes in operations or conditions of the permittee which may result in a new or increased discharge of waste, shall be reported to the Permit Board by submission of a new application for a permit, or if the discharge does not violate effluent limitations specified in the permit, by submitting to the Permit Board a notice of a new or increased discharge.

B. MONITORING, REPORTING, AND RECORDKEEPING

1. Routine Reporting

Such test results, reports, or other data as the Mississippi Environmental Quality Permit Board may determine to be necessary shall be submitted on a regular basis to the following address:

MISSISSIPPI DEPARTMENT OF ENVIRONMENTAL QUALITY
OFFICE OF POLLUTION CONTROL
P. O. Box 10385
Jackson, Mississippi 39289-0385

2. Duty to Provide Information

The permittee shall furnish to the Permit Board, within a reasonable time, any information which the Permit Board may request to determine whether cause exists for modifying, revoking and reissuing, or terminating the permit or to determine compliance with the permit. The permittee shall also furnish to the Permit Board upon request, copies of records required to be kept by the permit.

3. Test Procedures

Testing procedures for the analysis of pollutants for all permits include those set forth in 40 CFR 136 which is incorporated herein and adopted by reference or alternative procedures approved and/or promulgated by EPA.

4. Representative Sampling

Samples and measurements taken as required herein shall be representative of the volume and nature of the monitored wastewater.

5. Recording of Results

A permittee required to monitor a waste discharge pursuant to Chapter One, Section IV.A.28. of the State of Mississippi Wastewater Permit Regulations shall maintain records of all information obtained from such monitoring, including:

a. The exact place, date, and time of sampling;
b. The dates the analyses were performed;
c. The person(s) who performed the analyses;
d. The analytical techniques, procedures or methods used; and
e. The results of all required analyses.

6. Records Retention

a. All records and results of monitoring activities, including calibration and maintenance records, shall be retained by the permittee a minimum of three (3) years unless otherwise required or extended by the Permit Board, copies of which shall be furnished to the Department upon request.

b. The permittee shall furnish to the Permit Board upon request, copies of records required to be kept by this permit.

7. Falsifying Reports

Any permittee who falsifies, tampers with, or knowingly renders inaccurate any monitoring device or method required by the Permit Board to be maintained as a condition in a permit, or who alters or falsifies the results obtained by such devices or methods and/or any written report required by or in response to a permit condition, shall be deemed to have violated a permit condition and shall be subject to the penalties provided for a violation of a permit condition pursuant to Section 49-17-43 of the Code.

8. Noncompliance Reporting

a. The permittee shall report any noncompliance which may endanger health or the environment. Any information shall be provided orally within 24 hours from the time the permittee becomes aware of the circumstances. A written submission shall also be provided within 5 days of the time the permittee becomes aware of the circumstances. The written submission shall contain a description of the noncompliance and its cause; the period of noncompliance, including exact dates and times, and if the noncompliance has not been corrected, the anticipated time it is expected to continue; and steps taken or planned to reduce, eliminate, and/or prevent recurrence of the noncompliance.

b. The following shall be included as information which must be reported within 24 hours under this paragraph.

(1) Any unanticipated bypass which exceeds any effluent limitation in the permit.

(2) Any upset which exceeds any effluent limitation in the permit.

(3) Violation of a maximum daily discharge limitation for any of the pollutants listed by the Permit Board in the permit to be reported within 24 hours.

c. The Executive Director may waive the written report on a case-by-case basis for reports under paragraph a. of this section if the oral report has been received within 24 hours.

9. Other Noncompliance

The permittee shall report all instances of noncompliance not reported under Part I.D or Part II.B.6, at the time monitoring reports are submitted or within 30 days from the end of the month in which the noncompliance occurs. The reports shall contain the information listed in Part II.B.6.

10. Right of Entry

The permittee shall allow the Mississippi Environmental Quality Permit Board and/or their authorized representatives, upon the presentation of credentials:

a. To enter upon the permittee's premises where a wastewater source is located or in which records are required to be kept under the terms and conditions of this permit; and

b. At reasonable times to have access to and copy any records required to be kept under the terms and conditions of this permit; to inspect any monitoring equipment or monitoring method required in this permit; and to sample any wastewater generated at this facility.

c. In the event of investigation during an emergency response action, a reasonable time shall be any time of the day or night.

11. Transfer of Ownership or Control

This permit is not transferable to any person except after proper notice and approval by the Permit Board. In the event of any change in control or ownership of facilities, the permittee shall notify the Mississippi Environmental Quality Permit Board at least thirty (30) days in advance of the proposed transfer date. The notice should include a written agreement between the existing and new permittees containing a specific date for the transfer of permit responsibility, coverage, and liability.

12. Signatory Requirements 40 CFR 403.12(l)

All applications, reports, or information submitted to the Permit Board shall be signed and certified.

a. All permit applications shall be signed as follows:

(1) For a corporation: by a responsible corporate officer. For the purpose of this Section, a responsible corporate officer means: (1) a president, secretary, treasurer or vice president of the corporation in charge of a principal business function, or any other person who performs similar policy - or decision-making function for the corporation, or (2) the manager of one or more manufacturing, production, or operating facilities employing more than 250 persons or having gross annual sales or expenditures exceeding 25 million (in second quarter 1980 dollars), if authority to sign documents has been assigned or delegated to the manager in accordance with corporate procedures.

(2) For a partnership or sole proprietorship: by a general partner or the proprietor, respectively; or

(3) For a municipality, State, Federal, or other public agency: by either a principal executive officer or ranking elected official.

b. All reports required by the permit and other information requested by the Permit Board shall be signed by a person described above or by a duly authorized representative of that person. A person is a duly authorized representative only if:

(1) The authorization is made in writing by a person described above;

(2) The authorization specifies either an individual or a position having responsibility for the overall operation of the regulated facility or activity, such as the position of plant manager, operator of a well or a well field, superintendent, position having overall responsibility for environmental matters for the company. (A duly authorized representative may thus be either a named individual or any individual occupying a named position.); and

(3) The written authorization is submitted to the Permit Board.

c. Changes to authorization. If an authorization under paragraph (b) of this section is no longer accurate because a different individual or position has responsibility for the overall operation of the facility, a new authorization satisfying the requirements of paragraph (b) of this section must be submitted to the Permit Board prior to or together with any reports, information, or applications.

d. Certification. Any person signing a document under paragraphs (a) or (b) of this section shall make the following certification:

> "I certify under penalty of law that this document and all attachments were prepared under the direction or supervision in accordance with a system designed to assure that qualified personnel properly gather and evaluate the information submitted. Based on my inquiry of the person or persons who manage the system, or those persons directly responsible for gathering the information, the information submitted is, to the best of my knowledge and belief, true, accurate, and complete. I am aware that there are significant penalties for submitting false information, including the possibility of fine and imprisonment for knowing violations."

13. Other Information

Where the permittee becomes aware that it failed to submit any relevant facts in a permit application, or submitted incorrect information in a permit application or in any report to the Permit Board, it shall promptly submit such facts or information.

14. Availability of Records

Except for data determined to be confidential under the Mississippi Air and Water Pollution Control Law, all reports prepared in accordance with the terms of this permit shall be available for public inspection at the offices of the Mississippi Office of Pollution Control.

15. Permit Modification

a. The permittee shall furnish to the Permit Board within a reasonable time any relevant information which the Permit Board may request to determine whether cause exists for modifying, revoking and reissuing, or terminating the permit, or to determine compliance with the permit.

b. The permit may be modified, revoked and reissued, or terminated for cause.

c. The filing of a request by the permittee for a permit modification, revocation and reissuance, or termination, or a notification of planned changes or anticipated noncompliance, does not stay any permit condition.

16. Property Rights

The issuance of this permit does not convey any property rights in either real or personal property, or any exclusive privileges, nor does it authorize any injury to private property or any invasion of personal rights, nor any infringement of Federal, State, or local laws or regulations.

17. Oil and Hazardous Substance Liability

Nothing in this permit shall be construed to preclude the institution of any legal action or relieve the permittee from any responsibilities, liabilities, or penalties to which the permittee is or may be subject to under Section 311 of the Federal Water Pollution Control Act or the applicable provisions under Mississippi Law pertaining to the transportation, storage, treatment, or spillage of oil or hazardous substances.

18. Hazardous Waste Release

a. The permittee shall notify the Mississippi Department of Environmental Quality, the EPA Regional Waste Management Division Director, State hazardous waste authorities, and the POTW in writing of any discharge into the POTW of a substance, which, if otherwise disposed of, would be a hazardous waste under 40 CFR part 261. Such notification must include the name of the hazardous waste as set forth in 40 CFR part 261, the EPA hazardous waste number, and the type of discharge (continuous, batch, or other). If the Industrial User discharges more than 100 kilograms of such waste per calendar month to the POTW, the notification shall also contain the following information to the extent such information is known and readily available to the Industrial User: An identification of the hazardous constituents contained in the wastes, as estimation of the mass and concentration of such constituents in the wastestream discharged during that calendar month, and an estimation of the mass of constituents in the wastestream expected to be discharged during the following twelve months. All notifications must take place within 180 days of the effective date of this rule. Industrial users who commence discharging after the effective date of this rule shall provide the notification no later than 180 days after the discharge of the listed or characteristic hazardous waste. Any notification under this paragraph need be submitted only once. However, notifications of changed discharges must be submitted under 40 CFR 403.12(j). The notification requirement in this section does not apply to pollutants already reported under the self-monitoring requirements of 40 CFR 403.12(b), (d), and (e).

b. Dischargers are exempt from the requirements of paragraph a. of this section during a calendar month in which they discharge no more than fifteen kilograms of hazardous wastes, unless the wastes are acute hazardous wastes as specified in 40 CFR 261.30(d) and 261.33(d). Discharge of more than fifteen kilograms of non-acute hazardous wastes in a calendar month, or of any quantity of acute hazardous wastes as specified in 40 CFR 261.30(d) and 261.33(e), requires a one-time notification. Subsequent months during which the Industrial User discharges more than such quantities of any hazardous waste do not require additional notification.

c. In the case of any new regulations under section 3001 of RCRA identifying additional characteristics of hazardous waste or listing any additional substance as a hazardous waste, the Industrial User must notify the POTW, the EPA Regional Waste Management Division Director, and State hazardous waste authorities of the discharge of such substance within 90 days of the effective date of such regulations.

d. In the case of any notification made under paragraph a. of this section, the Industrial User shall certify that it has a program in place to reduce the volume and toxicity of hazardous wastes generated to the degree it has determined to be economically practical.

19. Severability

The provisions of this permit are severable. If any provision of this permit, or the application of any provision of this permit to any circumstances, is challenged or held invalid, the validity of the remaining permit provisions and/or portions thereof or their application to other persons or sets of circumstances, shall not be affected thereby.

20. Closure Requirements

Should the permittee decide to permanently close and abandon the premises upon which it operates, it shall so notify the Permit Board no later than 90 days prior to doing so. This Closure Plan shall address how and when all manufactured products, by-products, raw materials, stored chemicals, and solid and liquid waste and residues will be removed from the premises so that no potential environmental hazard to the waters of the State will be presented.

21. Submittal of Discharge Monitoring Results

Monitoring reports. Monitoring results shall be reported at the intervals specified in the permit.

a. Monitoring results must be reported on a Discharge Monitoring Report (DMR) and/or forms provided or specified by the Permit Board for reporting results of monitoring, of sludge use or disposal practices.

b. If the permittee monitors any pollutant as prescribed in the permit more frequently than required by the permit using test procedures approved under 40 CFR Part 136 or, in the case of sludge use or disposal, approved under 40 CFR Part 136 unless otherwise specified in 40 CFR Part 503, or as specified in the permit, the results of this monitoring shall be included in the calculation and reporting of the data submitted in the DMR or sludge reporting form specified by the Permit Board.

c. Calculations for all limitations which require averaging of measurements shall utilize an arithmetic mean unless otherwise specified by the Permit Board in the permit.

d. If the results for a given sample analysis are such that any parameter (other than fecal coliform) is not detected at or above the minimum level for the test method used, a value of zero will be used for that sample in calculating an arithmetic mean value for the parameter. If the resulting calculated arithmetic mean value for that reporting period is zero, the permittee shall report "NODI = B" on the DMR. For fecal coliform, a value of 1.0 shall be used in calculating the geometric mean. If the resulting fecal coliform mean value is 1.0, the permittee shall report "NODI = B" on the DMR. For each quantitative sample value that is not detectable, the test method used and the minimum level for that method for that parameter shall be attached to and submitted with the DMR. The permittee shall then be considered in compliance with the appropriate effluent limitation and/or reporting requirement.

e. Monitoring results obtained during the month shall be summarized and reported on a Discharge Monitoring Report Form (EPA No. 3320-1), postmarked no later than the 28th day of the following month. The first report is due on . Copies of this, and any other reports required herein, shall be signed in accordance with Chapter One, Sections II.C and II.E of the State of Mississippi Wastewater Permit Regulations, and shall be submitted to the Mississippi Environmental Quality Permit Board at the following address:

MISSISSIPPI DEPARTMENT OF ENVIRONMENTAL QUALITY
OFFICE OF POLLUTION CONTROL
P. O. Box 10385
Jackson, Mississippi 39289-0385

22. Expiration of Permit

At least 180 days prior to the expiration date of this permit pursuant to the State law and regulation, the permittee who wishes to continue to operate under this permit shall submit an application to the Permit Board for reissuance. The Permit Board may grant permission to submit an application later than this, but no later than the expiration date of the permit.

23. Civil and Criminal Liability

a. Any person who violates a term, condition or schedule of compliance contained within this permit or the Mississippi Water Pollution Control Law is subject to the actions defined by law.

b. Except as provided in permit conditions on "Bypassing" and "Upsets" (Part II, A-4 and 5), nothing in this permit shall be construed to relieve the permittee from civil or criminal penalties for noncompliance.

c. It shall not be the defense of the permittee in an enforcement action that it would have been necessary to halt or reduce the permitted activity in order to maintain compliance with the conditions of this permit.

24. Protection of Confidential Information

a. Pursuant to Miss. Code Ann. § 49-17-39 and 40 CFR 123.41, the Permit Board shall make available to the public all information contained on any form and all public comments on such information. Effluent data and information concerning air or water quality shall also be made available to the public. Information that is determined by the Commission to be trade secrets shall not be disclosed to the public without prior consent of the source of such information. When a claim of confidentiality is made by a person in accordance with the provisions of Miss. Code Ann. § 49-17-39, a recommendation on the questions of confidentiality shall be made by the Commission and forwarded to the Regional Administrator (or his/her designee) of EPA for his concurrence in such determination of confidentiality.

b. A copy of a State, UIC, or NPDES permit application, public notice, fact sheet, draft permit and other forms relating thereto, including written public comment and other reports, files and information relating to the application not classified as confidential information by the Commission pursuant to Part II.B.21.a., shall be available for public inspection and copying during normal business hours at the office of the Department in Jackson, Mississippi.

c. Upon determination by the Commission that information submitted by a permit applicant is entitled to protection against disclosure as trade secrets, the information shall be so labeled and otherwise handled as confidential. Copies of the information and a notice of the Commission's action shall be forwarded to the Regional Administrator (or his/her designee). In making its determination of entitlement to protection as a trade secret, the Commission shall follow the procedure set forth in Miss. Code Ann. § 49-17-39. In the event the Commission denies the claim of confidentiality, the applicant shall have, upon notification thereof, the right to appeal the Commission's determination in the same manner provided for other orders of the Commission. No disclosure, except to EPA, shall be allowed until any appeal from the determination of the Commission is completed.

25. Spill Prevention and Best Management Plans

Any permittee which has above ground bulk storage capacity, of more than 1320 gallons or any single container with a capacity greater than 660 gallons, of materials and/or liquids (including but not limited to, all raw, finished and/or waste material) with chronic or acute potential for pollution impact on waters of the State shall comply with the following conditions to prevent the potential release of these materials and storm water contaminated with these materials:

a. Bulk storage not subject to Hazardous Waste Management Regulations or 40 CFR 112 (Oil Pollution Prevention) regulations shall be provided with secondary containment as found in 40 CFR 112 or equivalent protective measures;

b. A Spill Prevention Control and Countermeasures (SPCC) Plan or Best Management Practices (BMP) Plan shall be maintained for any bulk storage subject to these requirements;

c. Tank systems, not necessarily classified as bulk storage, are also subject to the conditions above.

26. Definitions

a. "Monthly average" means the average of "daily discharges" over a calendar month, calculated as the sum of all "daily discharges" measured during a calendar month divided by the number of "daily discharges" measured during the month. The monthly average for fecal coliform bacteria is the geometric mean of "daily discharges" measured during the calendar month. In computing the geometric mean for fecal coliform bacteria, the value one (1) shall be substituted for sample results of zero.

b. "Weekly average" means the average of "daily discharges" over a calendar week, calculated as the sum of all "daily discharges" measured during a calendar week divided by the number of "daily discharges" measured during that week. The weekly average for fecal coliform bacteria is the geometric mean of all "daily discharges" measured in a calendar week. In computing the geometric mean for fecal coliform bacteria, one (1) shall be substituted for sample results of zero. For self-monitoring purposes, the value to be reported is the single highest weekly average computed during a calendar month.

c. "Daily maximum" means the highest "daily discharge" over a calendar month.

d. "Monthly maximum" means the highest "daily discharge" over a calendar month.

e. "Yearly average" means the average of "daily discharges" over a calendar year, calculated as the sum of all "daily discharges" measured during the calendar year divided by the number of "daily discharges" measured during the calendar year. The yearly average for fecal coliform bacteria is the geometric mean of "daily discharges" during the calendar year. In computing the geometric mean for fecal coliform bacteria, the value one (1) shall be substituted for sample results of zero.

f. "Yearly maximum" means the highest "daily discharge" measured over a calendar year.

g. "Toxic pollutants" include, but are not limited to: (a) any toxic substance listed in Section 307(a)(1) of the Clean Water Act (CWA), any chemical listed in Section 313(c) of the Superfund Amendments and Reauthorization Act of 1986; and (b) any substance (that is not also a conventional or nonconventional pollutant) for which EPA or the State has published an acute or chronic toxicity criterion.

h. "Hazardous substances" are defined in 40 CFR 116.4.

27. Other Specific Pretreatment Requirements

a. The permittee shall report the production rate for the process which generates the wastewater discharge as required by 40 CFR 403.12(e)(3).

PUBLIC NOTICE

Mississippi Environmental Quality Permit Board
P. O. Box 10385
Jackson, MS 39209
Telephone No. (601) 961-5171

September 1, 1995

Koppers Industries, Inc. has applied to the Mississippi Environmental Quality Permit Board for the reissuance of a Pretreatment Permit to discharge process wastewater into the Grenada POTW. The applicant's operation is wood preservation. One discharge is described in the application.

The environmental impact of this project has been evaluated and the staff of the Permit Board believes that, with proper environmental constraints and limitations on the applicant, this project will operate within all State and Federal environmental laws and standards. Therefore, the staff of the Board has preliminarily decided, based on available information, to recommend to the Board that a permit be issued containing numerous environmental regulatory constraints specifically stated in the draft permit. However, before proceeding further with the staff evaluation, public comments are being solicited. The staff recommendation to the Board, as well as the Board decision, will be made only after a thorough consideration of all public comments.

Persons wishing to comment upon or object to the proposed determinations are invited to submit comments in writing to Mr. Jerry Cain at the Permit Board's address shown above, no later than September 30, 1995. All comments received by that date will be considered in the formulation of final determinations regarding the application. A public hearing will be held if the Permit Board finds a significant degree of public interest in the proposed permit.

Additional details about the application and the proposed determination, a sketch showing the location of the discharge, and a copy of the draft permit are available by writing or calling Mr. Bryan Collins at the Permit Board's address and telephone number shown above. Also, this and other information is available for review and copying during normal business hours at the Southport Center Building located at 2380 Highway 80 West, Jackson, MS.

Please bring the foregoing to the attention of persons whom you know will be interested.

PERMIT #: MSP090300 TRANSACTION CODE: (N=NEW C=CHANGE) N IF THIS IS A REISSUANCE, DID PERMIT LIMITS CHANGE (Y/N) ? Y

FACILITY NAME: KOPPERS INDUSTRIES, INC

COGNIZANT OFFICIAL: MR. RONALD MURPHEY

PHONE: 601-226-4584 CITY: GRENADA COUNTY CODE: 043

SIC CODE: 2491 TYPE OF APPLICATION: PT FACILITY OWNERSHIP: PRV

TYPE OF PERMIT: S FEDERAL GRANT: 92-500 ONLY "$" N WATER QUALITY LIMITS: (Y/N) Y

FACILITY INACTIVE CODE: FACILITY INATIVE DATE: - - (Use ONLY if you are inactivating an entire facility. Otherwise use OFLG)

SUB-REGION: NO ENGINEER: (initials) BDC AVERAGE DESIGN FLOW : 0.035 MGD

Facility Data Screen #2 (FAC2)

PERMIT #: MSP090300 TRANSACTION CODE: (N=NEW C=CHANGE) N

RIVER BASIN # 1011

0338 - Upper Tombigbee River
0340 - Lower Tombigbee River
0342 - Pascagoula River
0343 - Pearl River
0408 - Tennessee River
1006 - Mississippi River
1011 - Yazoo River
1018 - Big Black
1021 - South Independent
1099 - Coastal Streams

RECEIVING WATERS GRENADA POTW - MS0020397

Facility Type:

RDF1 P

I = Industrial
X = Ind Non Report
P = Pretreatment
M = Municipal
D = Domestic
N = Dom Non Report
F = Federal

Toxic and Bio-Assay Code:

RDF2

T = Toxic
= Acute
= Chronic

Treatment Type:

RDF4 AS

AC = Activated Carbon
AS = Activated Sludge
AL = Aerated Lagoon
AN = Anaerobic Lagoon
API = API Separator
AW = Artificial Wetlands
CC = Contact Cooling
CL = Conventional Lagoon
CT = Cooling Tower
DW = Deepwell
DF = Diffuser
EOP = End of Pipe
EV = Evaporation
HC = Hydrograph Controlled
ML = Multiple Lagoon
NC = Non-Contact Cooling
OS = Off Site Disposal
OF = Overland Flow
OD = Oxidation Ditch
PC = Physical Chemistry
PH = PH Adjustment
PS = Primary Sedimentation
RR = Recycle and Reuse
RO = Reverse Osmosis
RBC = Rotating Biological Contractor
SF = Sand Filter
SS = Secondary Sedimentation
SI = Spray Irrigation
SW = Statewide
TF = Trickling Filter

Facility Address Screen (FACA)

Permit #: MSP090300

- - - - Primary DMR Mailing Address - - - -

Facility Name: KOPPERS INDUSTRIES, INC

Address Line1: PO BOX 160

Address Line2:

CITY: TIE PLANT ST: MS ZIP: 38960

- - - - Alternate DMR Mailing Address - - - -

Facility Name:

Address Line1:

Address Line2:

CITY: ST: ZIP:

- - - - Facility Location Address - - - -

Facility Name:

Address Line1:

Address Line2:

CITY: ST: ZIP:

Telephone: - -

PERMIT # : MSP090300

TRANSACTION CODE : N
(N=New C=Change)

.SCHARGE NUMBER : 001

REPORT DESIGNATOR : A

INITIAL REPORT DATE : 12-01-95

REPORT UNITS : M

NUMBER OF UNITS IN : REPORT PERIOD 1

TOTAL NUMBER OF UNITS DUE : 12

INITIAL STATE SUBMISSION DATE : 01-28-96

STATE SUBMISSION UNIT : M

PIPE DESCRIPTION : TOTAL FACILITY DISCHARGE

SEASONAL DMR PRINTING INDICATORS : Y Y Y Y Y Y Y Y Y Y Y Y

INITIAL LIMIT DATES : START - - END - -

INTERIM LIMIT DATES : START - - END - -

FINAL LIMIT DATES : START 11-14-95 END 11-13-00

PIPE INACTIVE CODE : PIPE INACTIVE DATE : - -

AGENCY REVIEWER (ENGINEER) : BDC

(Use if only the pipe itself is not active.
o inactivate an entire facility, use FAC1.)

Outfall General Data Screen #2 (OFLT)

Use these nine lines if you want comments or instructions to appear on the bottom of the DMR when it is preprinted for the facility.

(Three lines are equal to one line on the DMR)

PERMIT # : M5P090300

Permit Issuance: TRANSACTION CODE : N
(N=NEW C=CHANGE)

PERMIT TRACKING EVENT CODE : P4099

SCHEDULED DATE : 11-14-95

ACTUAL DATE : 11-14-95

Permit Expiration: TRANSACTION CODE : N
(N=NEW C=CHANGE)

PERMIT TRACKING EVENT CODE : P5099

SCHEDULED DATE : 11-13-00

ACTUAL DATE : 11-13-00

Koppers Industries, Inc.
MSP090300
Pretreatment Rationale Addendum
Grenada, Mississippi
August 2, 1995

Koppers requested the minimum testing frequency for Copper, Chromium, and Arsenic in a letter dated July 20, 1995. This request will be granted because these pollutants are not expected to be found in the waste stream. They are included in the permit because of the federal regulations that group "CCA" treaters and "Creosote" treaters into the same category.