Tronox LLC, Columbus

General Information

ID	Branch	SIC	County	Basin	Start	End
1696	Chemical	2491	Lowndes	Tombigbee River	10/27/1992	

Address

Physical Address (Primary)	Mailing Address
2300 14th Avenue North Columbus, MS 39701	PO Box 268859 Oklahoma City, OK 731268859

Telecommunications

Type	Address or Phone
Work phone number	(405) 775-5129

Alternate / Historic AI Identifiers

Alt ID	Alt Name	Alt Type	Start Date	End Date
2808700020	Tronox LLC, Columbus	Air-AIRS AFS	10/12/2000	06/01/2002
168000020	Kerr McGee Chemical Corporation, Columbus	Air-Construction	06/12/1998	
168000020	Kerr McGee Chemical Corporation, Columbus	Air-Synthetic Minor Operating	06/06/1997	06/01/2002
168000020	Kerr McGee Chemical Corporation, Columbus	Air-Synthetic Minor Operating	06/12/1998	06/01/2002
MSR220010	Kerr McGee Chemical Corporation, Columbus	GP-Wood Treating	10/27/1992	07/13/1997
MSD990866329	Kerr McGee Chemical Corporation, Columbus	Hazardous Waste-EPA ID	10/12/2000	
MSD990866329	Kerr McGee Chemical Corporation, Columbus	Hazardous Waste-TSD	06/11/2001	04/12/2006
MSD990866329	Tronox LLC, Columbus	Hazardous Waste-TSD	04/13/2006	05/31/2011
1696	Kerr McGee Chemical Corporation	Historic Site Name	10/27/1992	04/10/2006
1696	Tronox, LLC	Official Site Name	04/10/2006	
MSP090021	Kerr McGee Chemical Corporation, Columbus	Water-Pretreatment	10/11/1994	10/10/1999
MSP090021	Kerr McGee Chemical Corporation, Columbus	Water-Pretreatment	08/23/2000	07/31/2005
MSP090021	Kerr McGee Chemical Corporation, Columbus	Water-Pretreatment	10/31/2005	04/12/2006
MSP090021	Tronox LLC, Columbus	Water-Pretreatment	04/13/2006	09/30/2010

Regulatory Programs

Program	SubProgram	Start Date	End Date
Air	NSPS Subpart Dc	09/12/1990	06/01/2002
Air	SM	06/06/1997	06/01/2002
Hazardous Waste	Large Quantity Generator	04/01/1997	
Hazardous Waste	TSD - Not Classified	06/11/2001	
Water	PT CIU	10/11/1994	09/01/2003
Water	PT CIU - Timber Products	10/11/1994	09/01/2003

	Processing (Subpart 429)		
Water	PT NCS	09/01/2003	
Water	PT SIU	10/11/1994	

Locational Data

Latitude	Longitude	Metadata	S / T / R	Map Links
33 ° 30 ' 38 .51 (033.510697)	88 ° 24 ' 34 .02 (088.409450)	**Point Desc:** PG - Plant entrance (General) Data collected by Louis Crawford on 7/11/00. PG - Plant Entrance (General) Data collected by Clift Jeter on 6/13/02. LAT 33deg 30min 36.6sec LON 88deg 24min 35.1sec **Method:** GPS Code (Psuedo Range) Differential **Datum:** NAD83 **Type:** MDEQ	Section: Township: Range:	SWIMS TerraServer Map It

10/13/2006 10:29:50 AM

Mississippi Department of Environmental Quality
Office of Pollution Control

I-sys 2000 Master Site Detail Report

Site Name: Kerr McGee Chemical Corporation, Columbus

PHYSICAL ADDRESS

LINE 1:	2300 14th Avenue and 20th Street
LINE 2:	
LINE 3:	
MUNICIPALITY:	Columbus
STATE CODE:	MS
ZIP CODE:	39703-

MAILING ADDRESS

LINE 1:	2300 Fourteenth Avenue North
LINE 2:	
LINE 3:	
MUNICIPALITY:	Columbus
STATE CODE:	MS
ZIP CODE:	39701-

OTHER INFORMATION

MASTER ID:	001696
COUNTY:	Lowndes
REGION	NRO
SIC 1:	2491
AIR TYPE:	SYNTHETIC MINOR
HW TYPE:	TSD
SOLID TYPE:	
WATER TYPE:	INDUSTRIAL
BRANCH:	Chemical Branch
ECED CONTACT:	
,	
BASIN:	
Tombigbee River Basin	

AIR PROGRAMS ☐ SIP ☐ PSD ☑ NSPS ☐ NESHAPS ☐ MACT

Mississippi Department of Environmental Quality
Office of Pollution Control

Pemits

PROGRAM	PERMIT TYPE	PERMIT #	MDEQ PERMIT CONTACT	ACTIVE
AIR	SMOP	168000020	Hall, Bobby	NO
AIR	SMOP	168000020	Shanks, Brad	YES
WATER	PRE-TREATMENT	MSP090021	Brumfield, Milton	YES
HAZ. WASTE	EPA ID	MSD990866329	Ferguson, Bruce	NO
GENERAL	WOOD TREATING	MSR22010	LaFleur, Kenny	YES
HAZ. WASTE	TSD		Ferguson, Bruce	YES
WATER	PRE-TREATMENT	MSP090021	Taylor, John	YES
AIR	CONSTRUCTION	168000020	Shanks, Brad	YES
HAZ. WASTE	TSD	MSD990866329	Crawford, Louis	NO

Compliance Actions

MEDIA	ACTIVITY TYPE	SCHEDULED	COMPLETED	INSPECTED B
HAZ WASTE	Compliance (Groundware) Monitori	5/17/00	5/17/00	Twitty, Russ
HAZ WASTE	Financial Record Review	3/1/00	5/11/00	Hamil, Larry
WATER	CMI - PRETREATMENT			Whittington, Darryail
WATER	CEI - PRETREATMENT	9/30/00		Shelton, Kirk
WATER	CEI - NA	6/16/99	6/16/99	Shelton, Kirk
HAZ WASTE	Compliance Evaluation Inspection	6/16/99	6/16/99	Shelton, Kirk
AIR	State Compliance Inspection	6/16/99	6/16/99	Shelton, Kirk

Enforcement Actions

MEDIA	ENFORCEMENT STEP	DETERMINED	RESOLVED	EMPLOYEE ASSIGNE
HAZ. WASTE	AGREED ORDER	6/16/99	5/18/00	Hamil, Larry
HAZ. WASTE	APPARENT VIOLATION	6/16/99	5/18/00	Hamil, Larry
AIR	APPARENT VIOLATION	6/16/99	5/18/00	Hamil, Larry
AIR	AGREED ORDER	6/16/99	5/18/00	Hamil, Larry

THIS FILE IS CLOSED

THE MATERIAL ENCLOSED IN THIS FILE BEGINS ON:

DATE: 1981

AND ENDS ON:

DATE: 1990

THERE IS MORE RECENT INFORMATION IN THE NEXT FILE ON THIS SITE

FILE COPY

STATE OF MISSISSIPPI

DEPARTMENT OF ENVIRONMENTAL QUALITY

RAY MABUS
GOVERNOR

December 20, 1990

Mr. J. J. Getz, Plant Manager
Kerr McGee Chemical Corporation
P. O. Box 906
Columbus, Mississippi 39701

Dear Mr. Getz:

Re: Kerr McGee Chemical Corporation
MSP090021
Discharge Monitoring Reports
Violations

After careful review of your discharge monitoring reports for the previous months beginning January, 1990, and ending on October, 1990, the following violations were noted:

Month	Parameter	Permit Conditions	Reported Values	Deviation
Feb.	Oil/Grease Avg.	50 mg/l	61.70 mg/l	23%
	Oil/Grease Max.	100 mg/l	167 mg/l	67%
March	Oil/Grease Avg.	50 mg/l	59.00 mg/l	18%
	Oil/Grease Max.	100 mg/l	206 mg/l	>100%
	Phenol Max.	48.8 lbs/day	171.26 lbs/day	>100%
May	Oil/Grease Avg.	50 mg/l	79.42 mg/l	59%
	Oil/Grease Max.	100 mg/l	301 mg/l	>100%
	Phenol Max.	48.8 lbs/day	54.04 lbs/day	11%
June	Phenol Max.	48.8 lbs/day	86.55 lbs/day	77%
July	Oil/Grease Max.	100 mg/l	240 mg/l	>100%
	Phenol Max.	48.8 lbs/day	73.32 lbs/day	50%
August	Phenol Max.	48.8 lbs/day	120.47 lbs/day	>100%
Sep.	Oil/Grease Avg.	50 mg/l	70.55 mg/l	40%
	Oil/Grease Max.	100 mg/l	186 mg/l	86%
	Phenol Max.	48.8 lbs/day	113.25 lbs/day	>100%
Oct.	Phenol Max.	48.8 lbs/day	80.79 lbs/day	65%

The above violations for the indicated months and parameters were discovered as a result of my inspection of your records during my visit to your facility on November 8, 1990. The inspection also revealed that calculating the Phenol discharge mass loading was done

incorrectly as well as the reporting of Oil and Grease average concentrations. We are in receipt of your letter dated November 16, 1990, and we acknowledge the cause of the violations and the remedial action that will be taken to correct the problems.

Please advise if you have any questions concerning this matter.

Respectfully,

Nameh Salem
Industrial Wastewater Control Branch

NS:els

FAX

DEPARTMENT OF ENVIRONMENTAL QUALITY

Bureau of Pollution Control
P. O. Box 10385
2380 Hwy 80 West
Jackson, MS 39289-0385
FAX Number: (601)961-5190

Date 11, 14, 1990

Please deliver the following 3 pages including transmittal sheet to:

Name J.J. Getz Phone 3293424

Location Columbus. Kerr McGee

☑ Routine ☑ Priority

From:

Name Nameh Salem Phone 961-5234

Location B.P.C., Jackson.

Message

Example of calculations for DMR.

If all pages are not received or are not legible please call us as soon as possible at (601)961-5139.

O&G Avg. Concentration

1- Add All concentration values of samples and deride by the number of samples

Example $5.4+10+2.5+1.1+0.5+1.2+2.0+1.5+1.2+3.5+4.2+4.0+0.8 = 37.9$ mg/L

Avg Conc. $= 37.9 \div 13 =$ **2.91 mg/L**

2- Report on DMR 2.91 mg/L (Avg Conc.)
10.00 mg/L (Max Conc.)

Phenols MAX. Mass loading lbs/D

1- Calculate for each sample the mass load (lbs/D

Mass lbs/D $= 8.34 \times$ (flow rate of sample) $\times$ (concentration of sample)

example: Mass lbs/D $= 8.34 \left(\frac{6200}{1000,000} \text{ MGD}\right)(300 \text{ mg/L})$

Mass lbs/D $= 15.51$ lbs/D

and so on - - - - - - - -

2- Choose to report the (Max Mass lbs/D) of all samples, which is the highest value in lbs/D
in this case **16.75 lbs/D**

Refer to the April 90 DMR

Table No. 2-3
MCC-FPD Facility - Columbus
MONTH/YEAR - April-90

FACILITY DISCHARGE MONITORING RECORD

(Page 1 of 1)

		Parameters																	
		BOD		O&G		Phenols		TSS		Cu		Cr		As		pH (Max)	pH (Min)		
Permit Requirement				50 DA 100 MX			48.8												
Unit of Measurement		mg/l	lbs.	mg/l	lbs.	mg/l	lbs.	mg/l	lbs.	mg/l	lbs.	mg/l	lbs.	mg/l	lbs.	SU		SU	
Date	Flow																		
1																			
2				5.4		210													
3	4150																		
4	6200			(10)		300	15.51												
5	3500																		
6	4000	384		2.5		350	11.68	25											
7	4083																		
8	4083																		
9	4083			1.1		310	10.55												
10	3230			0.5		370	10.03												
11	(8000)																		
12	4250	228		1.2		350	12.40	25											
13	5167																		
14	5167																		
15	5167																		
16	4500			2.0		220	8.25												
17	4500																		
18	3900			1.5		320	10.41												
19	3400																		
20	3567	<1		1.2		280	8.33	23											
21	3567																		
22	3567																		
23	3500																		
24	3000			3.5		215	5.38												
25	3900			4.2		460	14.96												
26	3900	1035		4.0		(515)	(16.75)	36											
27	3900																		
28	3900																		
29	3600																		
30	3000			1.8		10.2	0.255												
31																			
Avg.	4239	412		✓ 2.91	✓	300		27.25											
Max.	8000	1035		✓ (10)	✓	515	(16.75)	36											
Min.	3000	<1		1.8		10.2		23											

DEQ Calculations

1432C

Pretreatment File

Citation
55 FR 30082-01
1990 WL 329299 (F.R.)
(Cite as: 55 FR 30082)

FOUND DOCUMENT

Database
FR

Mode
Page

RULES and REGULATIONS

ENVIRONMENTAL PROTECTION AGENCY

40 CFR Parts 122 and 403

[EN-FRL-3691-7]

RIN 2040-AA99

EPA Administered Permit Programs; the National Pollutant Discharge Eliminat System; General Pretreatment Regulations for Existing and New Sources; Regulations To Enhance Control of Toxic Pollutant and Hazardous Waste Discharges to Publicly Owned Treatment Works

Tuesday, July 24, 1990

AGENCY: Environmental Protection Agency (EPA).

ACTION: Final rule.

SUMMARY: On November 23, 1988 (53 FR 47632), EPA proposed to revise the Gene Pretreatment and National Pollutant Discharge Elimination System regulations (40 CFR parts 122 and 403) pursuant to section 3018(b) of the Resource Conservation and Recovery Act (RCRA) and sections 307(b) and 402(b)(8) of th Clean Water Act (CWA). The proposed regulations were developed in accordanc with EPA's Report to Congress on the Discharge of Hazardous Wastes to Public Owned Treatment Works (EPA/530-SW-86-004, hereinafter referred to as "the Domestic Sewage Study" or "the Study"). Today the Agency is promulgating a final rule to implement many of the proposed revisions.

EPA submitted the Study to Congress in response to section 3018(a) of RCRA. This provision directed the Agency to prepare a report for Congress on waste discharged through sewer systems to publicly owned treatment works (POTWs) t are exempt from regulation under RCRA as a result of the Domestic Sewage Exclusion. The Study examined the nature and sources of hazardous wastes discharged to POTWs, measured the effectiveness of EPA's programs in dealing with such discharges, and identified for Agency consideration a number of possible initiatives that could enhance control of hazardous wastes entering POTWs.

Today's final rule is promulgated pursuant to section 3018(b) of RCRA. This section directs the Administrator to revise existing regulations and promulg additional regulations as are necessary to assure that hazardous wastes discharged to POTWs are adequately controlled to protect human health and th environment.

Copr. (C) West 1996 No claim to orig. U.S. govt. wo

WESTLA

6. Administrative Penalties Against Industrial Users
7. Provisions Governing Fraud and False Statements

III. Executive Order 12291

IV. Regulatory Flexibility Analysis

V. Paperwork Reduction Act

I. Background

The regulatory changes promulgated today are intended to improve control of hazardous wastes introduced into POTWs under the Domestic Sewage Exclusion. The exclusion, established by Congress in Section 1004(27) of the Resource Conservation and Recovery Act (RCRA), provides that solid or dissolved material in domestic sewage is not solid waste as defined in RCRA. A corollary is that such material cannot be considered a hazardous waste for purposes of RCRA.

The exclusion applies to domestic sewage as well as mixtures of domestic sewage and other wastes that pass through a sewer system to a publicly-owned treatment works (POTW) for treatment (see 40 CFR 261.4(a)(1)). The exclusion thus covers industrial wastes discharged to POTW sewers containing domestic sewage, even if these wastes would be considered hazardous if disposed of by other means.

One effect of the exclusion is that industrial facilities which generate hazardous wastes and discharge such wastes to sewers containing domestic sewage are not subject to RCRA manifest requirements for the transport of those excluded wastes. However, depending on the circumstances, such industrial users may be required to comply with certain other RCRA requirements that apply to generators of hazardous wastes. Some of these requirements are: (1) Determining whether a waste is hazardous (40 CFR 262.11); (2) obtaining an EPA identification number for hazardous wastes not discharged to the sewer (40 CFR 262.12); (3) accumulation of hazardous wastes (40 CFR 262.34); (4) recordkeeping (40 CFR 262.40 (c) and (d)); and (5) reporting (40 CFR 262.43). Additional requirements will usually apply if the wastes are treated or stored prior to discharge to a POTW (see 40 CFR part 264).

Another effect of the Domestic Sewage Exclusion is that POTWs receiving mixtures of hazardous waste and domestic sewage through the sewer system are not deemed to have received hazardous wastes. Therefore, such POTWs are not required to meet the RCRA requirements of 40 CFR part 264 for treating, storing, and disposing of these wastes. However, hazardous wastes delivered directly to a POTW by truck, rail, or dedicated pipe are not covered by the Domestic Sewage ***30083** Exclusion. Industries sending their wastes to POTWs in this manner are not covered by the exclusion, and POTWs receiving these wastes are subject to regulation under the RCRA permit-by-rule (see 40 CFR 270.60(c)).

In 1984, Congress enacted the Hazardous and Solid Waste Amendments to RCRA. Section 246 of the Amendments created a new section 3018(a) of RCRA, requiring EPA to prepare:

* * * a report to the Congress concerning those substances identified or listed under section 3001 which are not regulated under this subtitle by reason

Copr. (C) West 1996 No claim to orig. U.S. govt. works

of the exclusion for mixtures of domestic sewage and other wastes that pass through a sewer system to a publicly owned treatment works. Such report shall include the types, size, and number of generators which dispose of substances in this manner, the types and quantities disposed of in this manner, and the identification of significant generators, wastes, and waste constituents not regulated under existing Federal law or regulated in a manner sufficient to protect human health and the environment.

EPA submitted its report (the Study) to Congress on February 7, 1986. In performing the Study, the Agency reviewed information on 160,000 waste dischargers from 47 industrial categories and the residential sector. Because of the nature of the available data sources, the Study provided estimates for the discharge of the specific constituents of hazardous wastes (e.g., benzene, acetone, etc.) rather than estimates for hazardous wastes as they are more generally defined under RCRA (i.e., "characteristic" wastes such as ignitable or reactive wastes, or "listed" wastes such as spent solvents, electroplating baths, etc.). The Study also provided more extensive estimates for those hazardous constituents which are also CWA priority pollutants. The CWA priority pollutant list was originally developed as part of a settlement agreement between the Natural Resources Defense Council (NRDC) and EPA (NRDC v. Train, Nos. 2153-73, 75-172, 75-1698, 75-1267 (D.D.C. June 8, 1976)). This agreement required the Agency to promulgate technology-based standards for 65 compounds or classes of compounds. Congress then incorporated this list of toxic pollutants as part of the 1977 amendments to the CWA. From the list of compounds or classes of compounds, EPA later developed a list of 126 individual priority pollutants (see Appendix A to 40 CFR part 423).

EPA was able to give estimates in the Study on the types, sources, and quantities of many hazardous constituents discharged to POTWs. The Study provided information on industrial categories ranging from large hazardous waste generators (such as the organic chemicals industry) to the smaller generators (such as laundries and motor vehicle services). The Study also examined the fate of hazardous constituents once they are discharged to POTW collection and treatment systems and discussed the potential for environmental effects resulting from the discharge of these constituents after treatment by POTWs. The Study then discussed the effectiveness of existing government controls in dealing with these discharges, particularly federal and local pretreatment programs and categorical pretreatment standards applicable to industrial users of POTWs.

After considering all the pertinent data, EPA concluded that the Domestic Sewage Exclusion should be retained at the present time. The Study found that CWA authorities are generally the best way to control hazardous waste discharges to POTWs. However, the Study also recommended that these authorities should be employed more broadly and effectively to regulate hazardous waste discharges. The Study identified for Agency consideration a number of possible initiatives with a potential for enhancing CWA controls on hazardous wastes entering POTWs.

The legislative history of section 3018 of RCRA displays Congress' understanding that the appropriateness of the Domestic Sewage Exclusion depends largely on an effective pretreatment program under the CWA. The pretreatment program (mandated by sections 307(b) and 402(b)(8) of the CWA) provides that industrial users must pretreat pollutants discharged to POTWs to prevent the

Copr. (C) West 1996 No claim to orig. U.S. govt. works

discharge of pollutants that would interfere with or pass through the treatment works, or that would be otherwise incompatible with the POTWs.

As a follow-up to the Domestic Sewage Study, section 3018(b) of RCRA requires the Administrator to revise existing regulations and to promulgate such additional regulations as are necessary to assure that hazardous wastes discharged to POTWs are adequately controlled to protect human health and the environment. These regulations are to be promulgated pursuant to subtitle C of RCRA or any other authority of the Administrator, including section 307 of the CWA.

As a first step toward promulgating the regulations called for by section 3018(b), the Agency published an Advance Notice of Proposed Rulemaking (ANPR) in the Federal Register on August 22, 1986 (51 FR 30166). In the ANPR, EPA made preliminary suggestions for regulatory changes, which, if promulgated, would improve the control of hazardous wastes discharged to POTWs. The Agency also held three public meetings in Washington, DC, Chicago, and San Francisco to solicit additional comments on the ANPR.

The comments received on the ANPR were summarized and discussed in a Federal Register notice published on June 22, 1987 (52 FR 23477). That notice also described many of the activities which EPA is carrying out to address the recommendations of the Study. Most commenters suggested ways to make the pretreatment program more effective in controlling hazardous wastes discharged to municipal wastewater treatment plants. On November 23, 1988 (53 FR 47632), the Agency proposed regulatory changes in response to the recommendations of the Study and the comments received on the ANPR.

EPA believes that today's rule will satisfy the Congressional directive in section 3018(b) of RCRA that EPA revise existing regulations and promulgate such additional regulations "as are necessary to assure that [hazardous wastes] which pass through a sewer system to a publicly owned treatment works are adequately controlled to protect human health and the environment". These rules are designed to assure POTW compliance with water quality standards, including narrative water quality standards preventing the discharge of toxic materials in toxic amounts, and to provide necessary information and regulatory tools to POTWs to address problems that are identified.

States and EPA have invested a great deal of time and resources in developing water quality standards that provide a benchmark for determining whether harmful concentrations of pollutants exist in the nation's waters. Today's rules include important new information collection requirements that will inform POTWs and NPDES permit writers of the likelihood that POTW discharges will violate water quality standards, and also provides new information and regulatory tools with respect to industrial user discharges that may be causing water quality violations through the POTW effluent.

Of particular importance to controlling hazardous waste discharges to POTWs are the following provisions of today's rule. First, under revisions to 40 CFR part 122, POTWs meeting specified criteria will be required to test their effluent for toxicity which may be caused by industrial user discharges of hazardous wastes or other toxic *30084 substances. The results of this testing may indicate that POTWs are violating water quality standards, thereby endangering human health and the environment. Depending on the results of this testing, POTWs may receive new or more stringent permit limits regarding discharges of toxic pollutants. In order to comply with the revised permit

Copr. (C) West 1996 No claim to orig. U.S. govt. works

WESTLAW

limits, POTWs may either alter their operations or impose more stringent local limits on industrial user discharges of hazardous wastes. Imposition of such new or more stringent local limits will be facilitated by another requirement of today's rule: the requirement in 40 CFR 403.12(p) that industrial users notify POTWs, States and EPA of the nature and mass of RCRA hazardous wastes that they introduce into the sewers. In addition, under today's revisions to 40 CFR 122.21(j)(2), POTWs must evaluate in writing, at the same time as they submit the data from toxicity testing to their permit-issuing authority, the need to revise local limits. This new provision will allow the NPDES permit writer to review the POTW's rationale for not imposing more stringent local limits when the results of toxicity testing indicate that such new limits may be necessary to assure attainment of water quality standards. Today's rule also will ban the introduction to POTWs of wastes that exhibit the RCRA characteristic of ignitability. This ban is necessary to prevent explosions in sewer systems that could disrupt POTW operations and lead to releases of hazardous wastes and other toxic or hazardous substances in the sewers. "Midnight dumping" of hazardous wastes to sewers should be substantially curtailed through the ban in 40 CFR 403.5(b)(8) on the introduction of trucked or hauled wastes to POTWs except at discharge points identified for such use by the POTW. Finally, through general improvements in the pretreatment program provided by today's rule, such as industrial user slug control plans, permits for significant industrial users, and POTW enforcement response plans, EPA expects a significant enhancement over the control of hazardous wastes and other toxic and hazardous substances introduced to POTWs. The Agency notes that all pretreatment program changes required by today's rule must be incorporated in POTWs' NPDES permits upon reissuance.

While EPA believes that today's rule satisfies the requirements of section 3018(b), EPA intends to carefully review the effect of today's rule and promulgate in the future any additional regulations that experience reveals are necessary to improve control over hazardous waste and other industrial user discharges to POTWs. In addition, EPA has always recognized that additional categorical pretreatment standards will form an important component of effective controls over pollutants discharged to POTWs. On January 2, 1990, EPA recently issued a plan under section 304(m) of the Clean Water Act under which it will develop regulations for four new technology-based categorical pretreatment standards and will revise three existing standards (55 FR 80). The categories of dischargers selected for the development of new and revised pretreatment standards discharge large amounts of toxic and nonconventional pollutants to POTWs. The Domestic Sewage Study was an important source of data for the section 304(m) plan. While EPA is not obligated to base development of such technology-based categorical standards on findings relating to protection of human health or the environment, EPA believes that pollutant discharge reductions achieved through implementation of new categorical standards will advance the protection of human health and the environment.

It should be noted that today's rule does not directly address potential air emissions from the wastewater collection system or POTWs. EPA's Office of Air and Radiation is evaluating potential air emissions from the collection and treatment of wastewater discharged to POTWs and plans to address these air emissions under the Clean Air Act.

Copr. (C) West 1996 No claim to orig. U.S. govt. works



that EPA prohibit only those substances discharged in a quantity known to cause worker health and safety problems. This commenter pointed out that the only instance cited in the November 23, 1988 preamble of actual injury to workers involved hydrogen sulfide, and stated that regulation of other substances was unjustified because the existing prohibitions already protect worker health and safety.

In response, the Agency notes that all of the specific discharge prohibitions apply even in the absence of numeric limits developed by the POTW to implement such prohibitions. In addition, EPA does not agree that regulation of other substances besides hydrogen sulfide is unjustified to protect worker health and safety. The Domestic Sewage Study found that adverse health effects on POTW workers have been caused by a variety of pollutants (including toluene, benzene, hexane, *30090 phenol, hexavalent chromium, and chloroform).

However, the Agency agrees that there are certain situations in which industrial users should not be held responsible for a violation of the general pretreatment regulations (including today's prohibition against fume toxicity) because they did not possess the information necessary for them to prevent the causative discharge. To address this concern, EPA is today amending 40 CFR 403.5(a)(2) to provide that an industrial user, in any action brought against it alleging a violation of 40 CFR 403.5(b)(7), shall have an affirmative defense where that user can demonstrate that it did not know or have reason to know that its discharge, alone or in conjunction with a discharge or discharges from other sources, caused pass through or interference. Pursuant to 40 CFR 403.5(a)(2), the affirmative defense would also be available if the industrial user were in compliance with local limits developed to prevent pass through and interference, or (where no such limits for the pollutants in question had been developed) if the industrial user's discharge had not changed substantially in nature or constituents from the user's prior discharge activity when the POTW was in compliance with the POTW's NPDES pemit or applicable requirements for sewage sludge use or disposal.

c. Today's rule. Today's rule adds a new requirement (40 CFR 403.5(b)(7) that no discharge to the POTW shall result in toxic gases, vapors, or fumes within the POTW in a quantity that may cause acute worker health and safety problems. Today's rule also amends 40 CFR 403.5(a)(2) to provide that an industrial user shall have an affirmative defense in any action brought against it alleging a violation of 40 CFR 403.5(b)(7), if it can make the appropriate demonstrations pursuant to 40 CFR 403.5(a)(2)(i) and (ii).

3. RCRA Toxicity

The Study discussed the possibility of developing a specific prohibition to forbid the discharge of waste exhibiting the characteristic of toxicity, as measured by the Extraction Procedure (EP) or Toxicity Characteristic Leaching Procedure (TCLP). This prohibition was not proposed in the November 23, 1988 rule, but was discussed in the ANPR published in the Federal Register on August 22, 1986 (51 FR 30166).

The EP toxicity test and the TCLP are designed to simulate the propensity of metals and organic contaminants to leach from a landfilled or land-applied waste into ground water. The EP toxicity test was used under RCRA to determine

Copr. (C) West 1996 No claim to orig. U.S. govt. works



which wastes are hazardous by virtue of exhibiting the characteristic of toxicity. On March 29, 1990 (55 FR 11798) the Agency published a final rulemaking which, when effective, will replace the EP with the TCLP, which EPA believes provides a better measure of the propensity of pollutants to leach from a land-disposed waste.

EPA solicited comments in the ANPR on whether the EP toxicity test or the TCLP would be appropriate for determining whether particular pollutants are likely to cause pass through and interference. EPA noted that materials may be subsequently diluted when mixed with large amounts of domestic sewage, and that POTWs are capable of removing many such materials even in small amounts.

Comments in response to the ANPR were overwhelmingly opposed to adding specific prohibitions to the pretreatment regulations based on either the EP or the TCLP tests. Commenters generally asserted that since the tests model the tendency for metals and organic constituents to leach from a landfilled or land-applied waste into ground water, the tests were inappropriate for assessing whether an industrial wastewater discharge would cause pass through or interference at a POTW.

The Agency believes that requiring industrial wastestreams discharged to POTWs to pass either of the RCRA toxicity tests may result in both under-regulation and over-regulation of various pollutants with little technical justification, since application of the tests to industrial effluents does not take into account POTW removal efficiencies nor the potential for adverse impact on POTW collection and treatment systems. The Agency believes that current controls on toxic discharges from industrial users (the interference and pass through prohibition, categorical standards, and local limits) and from POTWs (permit limits, including controls on toxicity) are currently the best way to regulate materials that would warrant special consideration under RCRA due to leachability characteristics. For these reasons, EPA did not propose to change the current specific discharge prohibitions to add a prohibition based on any RCRA toxicity characteristic, nor is the Agency finalizing such a prohibition in today's rule.

One commenter on the ANPR, while agreeing that the RCRA toxicity tests were not necessarily suitable for industrial wastewater discharges, suggested that the Agency develop a leaching test applicable to such discharges because of the likelihood that they would leak from sewers and cause contamination of ground water.

EPA believes that such a test would be premature at the present t:ime because of the lack of available information about the extent of ground water contamination caused by leaky sewers. When more data is available, the Agency may consider developing such a test if appropriate.

4. Corrosivity (403.5(b)(2))

Section 403.5(b)(2) of the general pretreatment regulations currently prohibits the discharge of "pollutants which will cause corrosive structural damage to the POTW, (including) discharges with pH lower than 5.0, unless the works is specifically designed to accommodate such discharges." This prohibition provides a numeric limit on the discharge of acidic wastes, but does not contain a corresponding pH limitation for caustic wastes. The Study reviewed local ordinances and found that many provided numeric limits on the

Copr. (C) West 1996 No claim to orig. U.S. govt. works

employees at the facility.

A commenter suggested that the reporting requirements under 40 CFR 403.12 be used to fulfill the notification requirement. In response, the Agency notes that pollutants reported under 40 CFR 403.12 (b), (d), or (e) need not be reported under today's notification requirement. However, the reporting requirements under the above-mentioned provisions of 40 CFR 403.12 apply to pollutants regulated under applicable categorical pretreatment standards. Thus the reporting requirements under 40 CFR 403.12 may not necessarily address hazardous wastes and would fulfill today's requirements only if such wastes had been reported under 40 CFR 403.12 (b), (d), or (e).

To clarify that today's rule applies to new industrial users or to existing industrial users which will discharge hazardous waste only in the future, EPA has added a provision requiring industrial users who commence discharging after the effective date of today's rule to provide the notification no later than 180 days after the discharge of the hazardous waste.

c. Today's Rule

Today's rule provides that the industrial user shall notify the POTW, the EPA Regional Waste Management Division Director, and State hazardous waste authorities in writing of any discharge into the POTW of a substance, which, if otherwise disposed of, would be a hazardous waste under 40 CFR part 261. Such notification must include the name of the hazardous waste as set forth in 40 CFR part 261, the EPA hazardous waste number, and the type of discharge (continuous, batch, or other). If the industrial user discharges more than 100 kilograms of such waste per calendar month to the POTW, the notification shall also contain the following information to the extent such information is known and readily available to the industrial user: an identification of the hazardous constituents contained in the wastes, an estimation of the mass and concentration of such constituents in the wastestream discharged during that calendar month, and an estimation of the mass of constituents in the wastestream expected to be discharged during the following twelve months. All notifications must take place within 180 days of the effective date of this rule. Industrial users who commence discharging after the effective date of this rule shall provide the notification no later than 180 days after the discharge of the hazardous waste. Any notification under this paragraph need be submitted only once for each hazardous waste discharged. However, notifications of changed discharges must be submitted under 40 CFR 403.12(j). The notification requirement in this section does not apply to pollutants already reported under the self-monitoring requirements of 40 CFR 403.12 (b), (d), and (e).

Industrial users are exempt from the above requirements during a calendar month in which they discharge no more than fifteen kilograms of hazardous wastes, unless the wastes are acute hazardous wastes as specified in 40 CFR 261.30(d) and 261.33(e). Discharge of more than fifteen kilograms of non-acute hazardous wastes in a calendar month, or of any quantity of acute hazardous wastes as specified in 40 CFR 261.30(d) and 261.33(e), requires a one-time notification. Subsequent months during which the industrial user discharges additional quantities of such hazardous waste do not require additional notification.

Copr. (C) West 1996 No claim to orig. U.S. govt. works



WESTLAW

included as elements in permits or equivalent control mechanisms. Early calculation of all end-of-pipe limits, including those based on state law, will result in better compliance with applicable standards. Today's rule therefore includes a requirement in 40 CFR 403.8(f)(1)(iii) to include in the individual control mechanism effluent limits based on any applicable State or local law. The Agency has also added a requirement that the individual control mechanism include effluent limits based on applicable pretreatment standards in part 403.

Finally, the Agency received two comments on the requirement that applicable monitoring, sampling, and reporting requirements be included in individual control mechanisms. A State commented that control mechanisms should also include sampling location(s) to ensure that compliance is assessed at the point where the limits are applied. A POTW suggested that the requirement be modified in order to clarify that the requirement refers to self-monitoring instead of the POTW's own compliance monitoring activities.

The Agency agrees with both of these commenters. Sampling requirements should normally specify sampling location(s), and the location(s) should be point(s) at which the limitations set forth in the individual control mechanism apply. Moreover, the Agency intended in the proposal to require that individual control mechanisms contain self-monitoring requirements. The final rule requires that individual control mechanisms specify an identification of the pollutants to be monitored, sampling location and self-monitoring requirements, as well as sampling frequency and sample type. The Agency is also adding a requirement that the control mechanism contain recordkeeping requirements where applicable, since recordkeeping may be very useful in tracking compliance and in otherwise enabling the POTW to obtain needed information about significant industrial users. In addition, EPA has deleted from the proposed rule a separate requirement for notification of slug discharges, since such a requirement might imply that other types of notification should not be included in individual control mechanisms. Instead, the Agency is requiring that such mechanisms contain "applicable" notification requirements, which should include, as well as slug discharges, other notification requirements contained in part 403 such as non-compliance reporting and notification of changed discharge.

c. Today's Rule

Today's rule requires POTWs with approved pretreatment programs to issue permits or equivalent individual control mechanisms to each significant industrial user. The mechanisms shall be enforceable and shall contain, at a minimum, the following elements:

- Statement of duration (in no case more than five years);
- Statement of non-transferability of the individual control mechanism without, at a minimum, prior notification to the POTW and provision of a copy of the existing control mechanism to the new owner or operator;
- Effluent limits based on applicable general pretreatment standards in part 403 of this title, categorical pretreatment standards, local limits, and State and local law;
- Self-monitoring, sampling, reporting, notification, and recordkeeping requirements, including an identification of the pollutants to be monitored, sampling location, sampling frequency, and sample type, based on applicable

Copr. (C) West 1996 No claim to orig. U.S. govt. works

BUREAU OF POLLUTION CONTROL
SAMPLE REQUEST FORM

Lab Bench No. 359

I. GENERAL INFORMATION: Facility Name Kerr McGee Forest Products
County Code 1680 Lowndes NPDES Permit No. 90021
Discharge No. 001 Date Requested 3/90
Sample Point Identification Effluent to potw
Requested By Compliance Monitoring Data To Todd Edwards
Type of Sample: Grab (X) Composite (Flow) (Time) Other ( )

II. SAMPLE IDENTIFICATION:
Environment Condition Clear and warm Collected By D.Hall/D.Spurgeon
Where Taken At discharge v-notch weir

	Type	Parameters	Preservative	Date	Time
1.	Grab	Phenols	5 ml H_2SO_4	3/22/90	1130
2.	Grab	Oil & Grease	5 ml H_2SO_4	3/22/90	1130
3.					
4.					
5.					

III. FIELD:

Analysis	Computer Code	Request	Results	Analyst	Date
pH	(000400)	(X)	6.40	DH	3/22/90
D.O.	(000300)	( )			
Temperature	(000010)	( )			
Residual Chlorine	(050060)	( )			
Flow	(074060)	(X)	.005 MGD	DH	3/22/90

IV. TRANSPORTATION OF SAMPLE: Bus ( ) RO Vehicle ( ) Other ( )

V. LABORATORY: Received By David Singleton Date 3/23/90 Time 1040
Recorded By Dorothy lewis Date Sent to State Office 5-1-90

Analysis	Computer Code	Request	Result	Analyst	Date Measured
BOD_5	(000310)	( )	mg/1		*
COD	(000340)	( )	mg/1		
TOC	(000680)	( )	mg/1		
Suspended Solids	(099000)	( )	mg/1		
TKN	(000625)	( )	mg/1		
Ammonia-N	(000610)	( )	mg/1		
Fecal Coliform(1)	(074055)	( )	colonies/100 ml		*
Fecal Coliform(2)	(074055)	( )	colonies/100 ml		*
Total Phosphorus	(000665)	( )	mg/1		
Oil and Grease(1)	(000550)	(X)	45.0 mg/1	GT	4/2/90
Oil and Grease(2)	(000550)	( )	mg/1		
Chlorides	(099016)	( )	mg/1		
Phenol	(032730)	(X)	110.0 mg/1	DS	4/24/90
Total Chromium	(001034)	( )	mg/1		
Hex. Chromium	(001032)	( )	mg/1		
Zinc	(001092)	( )	mg/1		
Copper	(001042)	( )	mg/1		
Lead	(017501)	( )	mg/1		
Cyanide	(000722)	( )	mg/1		
		( )			
		( )			
		( )			
		( )			
		( )			
		( )			
		( )			
		( )			
		( )			
		( )			

Remarks

*Date of Test Initiation

SAMPLE REQUEST FORM Lab Bench No. _____

I. GENERAL INFORMATION: Facility Name KERR MCGEE FOREST PRODUCTS

County Code 1680 LOWNDES NPDES Permit No. 90021

Discharge No. 001 Date Requested MARCH/90

Sample Point Identification EFFLUENT TO POTW

Requested By COMP. MONIT. Data To TODD EDWARDS

Type of Sample: Grab (X) Composite (Flow) (Time) Other ( )

II. SAMPLE IDENTIFICATION:

Environment Condition Clear & warm Collected By David Hall / Dewitt Sparga

Where Taken At discharge V notch weir

	Type	Parameters	Preservative	Date	Time
1.	GRAB	PHENOLS	5ml H_2SO_4	3-22-90	1130
2.	GRAB	OIL & GREASE	5ml H_2SO_4	3-22-90	1130
3.					
4.					
5.					

III. FIELD:

Analysis	Computer Code	Request	Results	Analyst	Date
pH	(000400)	(X)	6.40	DH	3-22-90
D.O.	(000300)	( )			
Temperature	(000010)	( )			
Residual Chlorine	(050060)	( )			
Flow	(074060)	(X)	.005 MGD	DH	3-22-90

IV. TRANSPORTATION OF SAMPLE: Bus ( ) RO Vehicle ( ) Other (X) PUROLATOR

V. LABORATORY: Received By [signature] Date 3-23-90 Time 1040

Recorded By Dot Ennis Date Sent to State Office 5-1-90

Analysis	Computer Code	Request	Result	Analyst	Date Measured
BOD_5	(000310)	( )	mg/1		*
COD	(000340)	( )	mg/1		
TOC	(000680)	( )	mg/1		
Suspended Solids	(099000)	( )	mg/1		
TKN	(000625)	( )	mg/1		
Ammonia-N	(000610)	( )	mg/1		
Fecal Coliform(1)	(074055)	( )	colonies/100 ml		*
Fecal Coliform(2)	(074055)	( )	colonies/100 ml		*
Total Phosphorus	(000665)	( )	mg/1		
Oil and Grease(1)	(000550)	(X)	45.0 mg/1	CT	4-2-90
Oil and Grease(2)	(000550)	( )	mg/1		
Chlorides	(099016)	( )	mg/1		
Phenol	(032730)	(X)	110.0 mg/1	DS	4-24-90
Total Chromium	(001034)	( )	mg/1		
Hex. Chromium	(001032)	( )	mg/1		
Zinc	(001092)	( )	mg/1		
Copper	(001042)	( )	mg/1		
Lead	(017501)	( )	mg/1		
Cyanide	(000722)	( )	mg/1		
		( )			
		( )			
		( )			
		( )			
		( )			
		( )			
		( )			
		( )			
		( )			
		( )			

Remarks

*Date of Test Initiation

359

...EAU OF POLLUTION CONTROL
SAMPLE REQUEST FORM

Lab Bench No. 359

GENERAL INFORMATION: Facility Name Kerr McGee Forest Products
County Code 1680 Lowndes NPDES Permit No. 90021
Discharge No. 001 Date Requested 3/90
Sample Point Identification Effluent to potw Data To Todd Edwards
Requested By Compliance Monitoring
Type of Sample: Grab (X) Composite (Flow) (Time) Other ( )

SAMPLE IDENTIFICATION:
Environment Condition Clear and warm Collected By D.Hall/D.Spurgeon
Where Taken At discharge v-notch weir

	Type	Parameters	Preservative	Date	Time
1.	Grab	Phenols	5 ml H_2SO_4	3/22/90	1130
2.	Grab	Oil & Grease	5 ml H_2SO_4	3/22/90	1130
3.					
4.					
5.					

FIELD:

Analysis	Computer Code	Request	Results	Analyst	Date
pH	(000400)	(X)	6.40	DH	3/22/90
D.O.	(000300)	( )			
Temperature	(000010)	( )			
Residual Chlorine	(050060)	( )			
Flow	(074060)	(X)	.005 MGD	DH	3/22/90

V. TRANSPORTATION OF SAMPLE: Bus ( ) RO Vehicle ( ) Other ( )
VI. LABORATORY: Received By David Singleton Date 3/23/90 Time 1040
Recorded By Dorothy Lewis Date Sent to State Office 5-1-90

Analysis	Computer Code	Request	Result	Analyst	Date Measured *
BOD_5	(000310)	( )	mg/l		
COD	(000340)	( )	mg/l		
TOC	(000680)	( )	mg/l		
Suspended Solids	(099000)	( )	mg/l		
TKN	(000625)	( )	mg/l		
Ammonia-N	(000610)	( )	mg/l		
Fecal Coliform(1)	(074055)	( )	colonies/100 ml		*
Fecal Coliform(2)	(074055)	( )	colonies/100 ml		*
Total Phosphorus	(000665)	( )	mg/l		
Oil and Grease(1)	(000550)	(X)	45.0 mg/l	GT	4/2/90
Oil and Grease(2)	(000550)	( )	mg/l		
Chlorides	(099016)	( )	mg/l		
Phenol	(032730)	(X)	110.0 mg/l	DS	4/24/90
Total Chromium	(001034)	( )	mg/l		
Hex. Chromium	(001032)	( )	mg/l		
Zinc	(001092)	( )	mg/l		
Copper	(001042)	( )	mg/l		
Lead	(017501)	( )	mg/l		
Cyanide	(000722)	( )	mg/l		
		( )			
		( )			
		( )			
		( )			
		( )			
		( )			
		( )			
		( )			
		( )			

Remarks

*Date of Test Initiation

BUREAU OF POLLUTION CONTROL
SAMPLE REQUEST FORM

Lab Bench No. 279

I. GENERAL INFORMATION: Facility Name Kerr McGee
County Code 1680 Lowndes NPDES Permit No. 90021
Discharge No. 001 Date Requested 3/89
Sample Point Identification Process wastewater
Requested By Compliance Monitoring Data To Todd Edwards
Type of Sample: Grab (X) Composite (Flow) (Time X) Other ( )

II. SAMPLE IDENTIFICATION:
Environment Condition Very warm and overcast Collected By E.Richard
Where Taken From sampling structure

	Type	Parameters	Preservative	Date	Time
1.	Composite	As,Cr,Cu	5 ml HNO_3/Cool	3/14/89	1145
2.	Grab	Phenol, O&G	5 ml H_2SO_4/Cool	3/14/89	1145
3.					
4.					
5.					

II. FIELD:

Analysis	Computer Code	Request	Results	Analyst	Date
pH	(000400)	(X)	6.9	ER&DH	3/14/89
D.O.	(000300)	( )			
Temperature	(000010)	( )			
Residual Chlorine	(050060)	( )			
Flow	(074060)	(X)	.028 MGD	ER&DH	3/14/89

IV. TRANSPORTATION OF SAMPLE: Bus ( ) RO Vehicle ( ) Other ( )

V. LABORATORY: Received By Danny Ewert Date 3/16/89 Time 0940
Recorded By Dorothy Lewis Date Sent to State Office

Analysis	Computer Code	Request	Result	Analyst	Date Measured
BOD_5	(000310)	( )	mg/l		*
COD	(000340)	( )	mg/l		
TOC	(000680)	( )	mg/l		
Suspended Solids	(099000)	( )	mg/l		
TKN	(000625)	( )	mg/l		
Ammonia-N	(000610)	( )	mg/l		
Fecal Coliform(1)	(074055)	( )	colonies/100 ml		*
Fecal Coliform(2)	(074055)	( )	colonies/100 ml		*
Total Phosphorus	(000665)	( )	mg/l		
Oil and Grease(1)	(000550)	(X)	<5.0 mg/l	GT	3/27/89
Oil and Grease(2)	(000550)	( )	mg/l		
Chlorides	(099016)	( )	mg/l		
Phenol	(032730)	(X)	66.0 mg/l	JK	4/10/89
Total Chromium	(001034)	(X)	ND(DL=3.0 ug/l) mg/l	EP	5/1/89
Hex. Chromium	(001032)	( )	mg/l		
Zinc	(001092)	( )	mg/l		
Copper	(001042)	(X)	ND(DL=20 ug/l) mg/l	EP	3/28/89
Lead	(017501)	( )	mg/l		
Cyanide	(000722)	( )	mg/l		
Arsenic		(X)	7.6 ug/l	EP	5/2/89
		( )			
		( )			
		( )			
		( )			
		( )			
		( )			
		( )			
		( )			
		( )			

Remarks

*Date of Test Initiation

SAMPLE REQUEST FORM Lab Bench No. 1090

I. GENERAL INFORMATION: Facility Name Kerr McGee
County Code 1680 Lowndes NPDES Permit No. 90021
Discharge No. 001 Date Requested
Sample Point Identification Process wastewater
Requested By Compliance Monitoring Data To
Type of Sample: Grab (X) Composite (Flow) (Time X) Other ( )

II. SAMPLE IDENTIFICATION: D.Spurgeon
Environment Condition Clear and warm Collected By D.Hall
Where Taken Effluent structure

	Type	Parameters	Preservative	Date	Time
1.	Composite	As,Cr,Cu	HNO_3	8/15/89	1020
2.	Grab	Phenol Oil & Grease	H_2SO_4	8/15/89	1020
3.					
4.					
5.					

III. FIELD:

Analysis	Computer Code	Request	Results	Analyst	Date
pH	(000400)	(X)	9.80	DH/DS	8/15/89
D.O.	(000300)	( )			
Temperature	(000010)	( )			
Residual Chlorine	(050060)	( )			
Flow	(074060)	(X)	UNKNOWN	DH/DS	8/15/89

IV. TRANSPORTATION OF SAMPLE: Bus ( ) RO Vehicle ( ) Other ( )

V. LABORATORY: Received By Danny Ewert Date 8/16/89 Time 1030
Recorded By Dorothy Lewis Date Sent to State Office 12-11-89

Analysis	Computer Code	Request	Result		Analyst	Date Measured
BOD_5	(000310)	( )		mg/l		*
COD	(000340)	( )		mg/l		
TOC	(000680)	( )		mg/l		
Suspended Solids	(099000)	( )		mg/l		
TKN	(000625)	( )		mg/l		
Ammonia-N	(000610)	( )		mg/l		
Fecal Coliform(1)	(074055)	( )		colonies/100 ml		*
Fecal Coliform(2)	(074055)	( )		colonies/100 ml		*
Total Phosphorus	(000665)	( )		mg/l		
Oil and Grease(1)	(000550)	(X)	<5.0	mg/l	GT	9/21/89
Oil and Grease(2)	(000550)	( )		mg/l		
Chlorides	(099016)	( )		mg/l		
Phenol	(032730)	(X)	4.19	mg/l	DE	9/8/89
Total Chromium	(001034)	(X)	29.7	ug/l	EP	11/27/89
Hex. Chromium	(001032)	( )		mg/l		
Zinc	(001092)	( )		mg/l		
Copper	(001042)	(X)	65.0	ug/l	DE	11/30/89
Lead	(017501)	( )		mg/l		
Cyanide	(000722)	( )		mg/l		
Arsenic		(X)	37.6	ug/l	EP	11/27/89
Selenium		(X)	1.9	ug/l	EP	11/27/89
		( )				
		( )				
		( )				
		( )				
		( )				
		( )				
		( )				
		( )				

Remarks

*Date of Test Initiation

BUREAU OF POLLUTION CONTROL
SAMPLE REQUEST FORM

Lab Bench No. _____

I. GENERAL INFORMATION: Facility Name KERR MCGEE
County Code 1680 NPDES Permit No. 90021
Discharge No. 001 Date Requested _____
Sample Point Identification PROCESS WASTEWATER
Requested By COMPLIANCE MONITORING Data To _____
Type of Sample: Grab (X) Composite (Flow) (Time X) Other ( ) _____

II. SAMPLE IDENTIFICATION:
Environment Condition CLEAR & WARM Collected By DEWITT STURGEON / DAVID HALL
Where Taken EFFLUENT STRUCTURE

	Type	Parameters	Preservative	Date	Time
1.	COMPOSITE	As, Cr, Cu	HNO_3	8-15-89	10:20
2.	GRAB	Phenol, Oil & Grease	H_2SO_4	8-15-89	10:20
3.					
4.					
5.					

III. FIELD:

Analysis	Computer Code	Request	Results	Analyst	Date
pH	(000400)	(X)	9.80	D.H. D.S	8-15-89
D.O.	(000300)	( )			
Temperature	(000010)	( )			
Residual Chlorine	(050060)	( )			
Flow	(074060)	(X)	UNKNOWN	D.H. D.S.	8-15-89

IV. TRANSPORTATION OF SAMPLE: Bus ( ) RO Vehicle ( ) Other (X) PUROLATOR

V. LABORATORY: Received By _____ Date 8-16-89 Time 1030
Recorded By Dot Curtis Date Sent to State Office 12-11-89

Analysis	Computer Code	Request	Result		Analyst	Date Measured
BOD_5	(000310)	( )		mg/l		*
COD	(000340)	( )		mg/l		
TOC	(000680)	( )		mg/l		
Suspended Solids	(099000)	( )		mg/l		
TKN	(000625)	( )		mg/l		
Ammonia-N	(000610)	( )		mg/l		
Fecal Coliform(1)	(074055)	( )		colonies/100 ml		*
Fecal Coliform(2)	(074055)	( )		colonies/100 ml		*
Total Phosphorus	(000665)	( )		mg/l		
Oil and Grease(1)	(000550)	(X)	<5.0	mg/l	CT	9-21-89
Oil and Grease(2)	(000550)	( )		mg/l		
Chlorides	(099016)	( )		mg/l		
Phenol	(032730)	(X)	4.19	mg/l	DE	9-8-89
Total Chromium	(001034)	(X)	29.9	ug/l ~~mg/l~~	EP	11-27-89
Hex. Chromium	(001032)	( )		mg/l		
Zinc	(001092)	( )		mg/l		
Copper	(001042)	(X)	65.0	ug/l ~~mg/l~~	DE	11-30-89
Lead	(017501)	( )		mg/l		
Cyanide	(000722)	( )		mg/l		
As		(X)	37.6	ug/l	GP	11-27-89
Selenium		(X)	1.9	ug/l	ED	11-27-89
		( )				
		( )				
		( )				
		( )				
		( )				
		( )				
		( )				
		( )				

Remarks _____

*Date of Test Initiation

1090

BUREAU OF POLLUTION CONTROL
SAMPLE REQUEST FORM

Lab Bench No. 978

I. GENERAL INFORMATION: Facility Name Kerr McGee Wood Products
County Code Lowndes 1680 NPDES Permit No. 90021
Discharge No. 001 Date Requested 8/88
Sample Point Identification Pretreated effluent to city sewer
Requested By Compliance Monitoring Data To Todd Edwards
Type of Sample: Grab (X) Composite (Flow) (Time X) Other ( )

II. SAMPLE IDENTIFICATION:
Environment Condition Sunny Collected By Nancy Moore
Where Taken After v-notch weir in effluent manhole

	Type	Parameters	Preservative	Date	Time
1.	Composite	Cu, Cr, As	5 ml HNO_3	8/16/88	1110
2.	Grab	O&G, Phenols	5 ml H_2SO_4	8/16/88	1110
3.					
4.					
5.					

III. FIELD:

Analysis	Computer Code	Request	Results	Analyst	Date
pH	(000400)	(X)	6.0	NM	8/16/88
D.O.	(000300)	( )			
Temperature	(000010)	( )			
Residual Chlorine	(050060)	( )			
Flow	(074060)	(X)	57,250 GPD	NM	8/16/88

IV. TRANSPORTATION OF SAMPLE: Bus ( ) RO Vehicle ( ) Other ( )

V. LABORATORY: Received By Danny Ewert Date 8/17/88 Time 0930
Recorded By Dorothy Lewis Date Sent to State Office 10 27 88

Analysis	Computer Code	Request	Result		Analyst	Date Measured
BOD_5	(000310)	( )		mg/l		*
COD	(000340)	( )		mg/l		
TOC	(000680)	( )		mg/l		
Suspended Solids	(099000)	( )		mg/l		
TKN	(000625)	( )		mg/l		
Ammonia-N	(000610)	( )		mg/l		
Fecal Coliform(1)	(074055)	( )		colonies/100 ml		*
Fecal Coliform(2)	(074055)	( )		colonies/100 ml		*
Total Phosphorus	(000665)	( )		mg/l		
Oil and Grease(1)	(000550)	(X)	31.0	mg/l	GT	10/6/88
Oil and Grease(2)	(000550)	( )		mg/l		
Chlorides	(099016)	( )		mg/l		
Phenol	(032730)	(X)	118.0	mg/l	DE	8/24/88
Total Chromium	(001034)	(X)	3.0	ug/l	EP	10/12/88
Hex. Chromium	(001032)	( )		mg/l		
Zinc	(001092)	( )		mg/l		
Copper	(001042)	(X)	27.4	ug/l	EP	10/13/88
Lead	(017501)	( )		mg/l		
Cyanide	(000722)	( )		mg/l		
Arsenic		(X)	25.1	ug/l	EP	9/13/88
		( )				
		( )				
		( )				
		( )				
		( )				
		( )				
		( )				
		( )				
		( )				

Remarks

*Date of Test Initiation

BUREAU OF POLLUTION CONTROL
SAMPLE REQUEST FORM

Bench No. 363

I. GENERAL INFORMATION: Facility Name Kerr McGee
County Code Lowndes 1680 NPDES Permit No. 90021
Discharge No. 001 Date Requested 3/88
Sample Point Identification
Requested By Compliance Monitoring Data To S.Spengler
Type of Sample: Grab (X) Composite (Flow) (Time X) Other ( )

II. SAMPLE IDENTIFICATION:
Environment Condition Sunny Collected By Nancy Moore
Where Taken After av-notch weir in eff. manhole

	Type	Parameters	Preservative	Date	Time
1.	Composite	As,Cr,Cu	5 ml HNO_3	3/24/88	1115
2.	Grab	Oil & Grease,Phenol	5 ml H_2SO_4	3/24/88	1115
3.					
4.					
5.					

III. FIELD:

Analysis	Computer Code	Request	Results	Analyst	Date
pH	(000400)	(X)	6.5	NM	3/24/88
D.O.	(000300)	( )			
Temperature	(000010)	( )			
Residual Chlorine	(050060)	( )			
Flow	(074060)	(X)	.0015 MGD	NM	3/24/88

IV. TRANSPORTATION OF SAMPLE: Bus ( ) RO Vehicle ( ) Other ( )

V. LABORATORY: Received By Danny Ewert Date 3/23/88 1340
Recorded By Dorothy Lewis Date Sent to State Office 5-3-88 4-3-88

Analysis	Computer Code	Request	Result	Analyst	Date Measured
BOD_5	(000310)	( )	mg/l		*
COD	(000340)	( )	mg/l		
TOC	(000680)	( )	mg/l		
Suspended Solids	(099000)	( )	mg/l		
TKN	(000625)	( )	mg/l		
Ammonia-N	(000610)	( )	mg/l		
Fecal Coliform(1)	(074055)	( )	colonies/100 ml		*
Fecal Coliform(2)	(074055)	( )	colonies/100 ml		*
Total Phosphorus	(000665)	( )	mg/l		
Oil and Grease(1)	(000550)	(X)	32.0 mg/l	GT	4/28/88
Oil and Grease(2)	(000550)	( )	mg/l		
Chlorides	(099016)	( )	mg/l		
X Phenol	(032730)	(X)	29.0 mg/l	JK	4/21/88
Total Chromium	(001034)	(X)	ND (DL = 3 ug/l) mg/l	EP	4/19/88
Hex. Chromium	(001032)	( )	mg/l		
Zinc	(001092)	(X)	208.0 ug/l	EP	4/14/88
Copper	(001042)	(X)	17.4 ug/l	EP	4/19/88
Lead	(017501)	( )	mg/l		
Cyanide	(000722)	( )	mg/l		
Arsenic		(X)	74.7 ug/l	EP	4/28/88
		( )			
		( )			
		( )			
		( )			
		( )			
		( )			
		( )			
		( )			
		( )			

Remarks

*Date of Test Initiation

BUREAU OF POLLUTION CONTROL
SAMPLE REQUEST FORM

Lab Bench No. 1128

I. GENERAL INFORMATION: Facility Name Kerr McGee
County Code 1460 Lauderdale NPDES Permit No. PT 90024
Discharge No. 001 Date Requested 8/18/87
Sample Point Identification Effluent
Requested By Compliance Monitoring Data To Jerry Cain
Type of Sample: Grab (X) Composite (Flow) (Time) Other ( )

II. SAMPLE IDENTIFICATION:
Environment Condition Clear and hot Collected By Bill Davis
Where Taken Effluent wet well

	Type	Parameters	Preservative	Date	Time
1.	24 hr. comp.	BOD, SS	Chill	8/18/87	1040
2.	24 hr. comp.	TKN	5 ml H_2SO_4	8/18/87	1040
3.	24 hr. comp.	Cr,Cu,As	5 ml HNO_3	8/18/87	1040
4.	Grab	O&G,Phenol	5 ml H_2SO_4	8/18/87	1030
5.					

III. FIELD:

Analysis	Computer Code	Request	Results	Analyst	Date
pH	(000400)	(X)	7.1 su	BD	8/18/87
D.O.	(000300)	( )			
Temperature	(000010)	( )			
Residual Chlorine	(050060)	( )			
Flow	(074060)	(X)	8000 GPD	Operator	8/18/87

IV. TRANSPORTATION OF SAMPLE: Bus ( ) RO Vehicle ( ) Other ( )

V. LABORATORY: Received By Jackie Key Date 8/18/87 Time 1324
Recorded By Dorothy Lewis Date Sent to State Office

Analysis	Computer Code	Request	Result	Analyst	Date Measured
BOD_5	(000310)	(X)	6.0 mg/l	JK	*8/19/87
COD	(000340)	( )	mg/l		
TOC	(000680)	( )	mg/l		
Suspended Solids	(099000)	(X)	7.0 mg/l	JK	8/20/87
TKN	(000625)	(X)	1.86 mg/l	JK	8/21/87
Ammonia-N	(000610)	( )	mg/l		
Fecal Coliform(1)	(074055)	( )	colonies/100 ml		*
Fecal Coliform(2)	(074055)	( )	colonies/100 ml		*
Total Phosphorus	(000665)	( )	mg/l		
Oil and Grease(1)	(000550)	(X)	< 5.0 mg/l	GT	8/24/87
Oil and Grease(2)	(000550)	( )	mg/l		
Chlorides	(099016)	( )	mg/l		
Phenol	(032730)	(X)	0.04 mg/l	DE	9/5/87
Total Chromium	(001034)	(X)	< 50.0 ug/l	EP	10/5/87
Hex. Chromium	(001032)	( )	mg/l		
Zinc	(001092)	( )	mg/l		
Copper	(001042)	(X)	< 30.0 ug/l	EP	10/6/87
Lead	(017501)	( )	mg/l		
Cyanide	(000722)	( )	mg/l		
Arsenic		(X)	< 3.0 ug/l	EP	8/22/87
		( )			
		( )			
		( )			
		( )			
		( )			
		( )			
		( )			
		( )			
		( )			

Remarks

*Date of Test Initiation

BUREAU OF POLLUTION CONTROL
SAMPLE REQUEST FORM

Lab Bench No. 1129

I. GENERAL INFORMATION: Facility Name Kerr McGee
County Code 1460 Lauderdale NPDES Permit No. PT90024
Discharge No. 001 Date Requested 8/18/87
Sample Point Identification Effluent
Requested By Compliance Monitoring Data To Jerry Cain
Type of Sample: Grab (X) Composite (Flow) (Time) Other ( )

II. SAMPLE IDENTIFICATION:
Environment Condition Clear and hot Collected By Bill Davis
Where Taken Effluent structure

	Type	Parameters	Preservative	Date	Time
1.	Grab	PCP	Chill	8/18/87	1030
2.					
3.					
4.					
5.					

II. FIELD:

Analysis	Computer Code	Request	Results	Analyst	Date
pH	(000400)	( )			
D.O.	(000300)	( )			
Temperature	(000010)	( )			
Residual Chlorine	(050060)	( )			
Flow	(074060)	( )			

IV. TRANSPORTATION OF SAMPLE: Bus ( ) RO Vehicle ( ) Other ( )

V. LABORATORY: Received By Jackie Key Date 8/18/87 Time 1324
Recorded By Dorothy Lewis Date Sent to State Office

Analysis	Computer Code	Request	Result		Analyst	Date Measured
BOD_5	(000310)	( )		mg/l		*
COD	(000340)	( )		mg/l		
TOC	(000680)	( )		mg/l		
Suspended Solids	(099000)	( )		mg/l		
TKN	(000625)	( )		mg/l		
Ammonia-N	(000610)	( )		mg/l		
Fecal Coliform(1)	(074055)	( )		colonies/100 ml		*
Fecal Coliform(2)	(074055)	( )		colonies/100 ml		*
Total Phosphorus	(000665)	( )		mg/l		
Oil and Grease(1)	(000550)	( )		mg/l		
Oil and Grease(2)	(000550)	( )		mg/l		
Chlorides	(099016)	( )		mg/l		
Phenol	(032730)	( )		mg/l		
Total Chromium	(001034)	( )		mg/l		
Hex. Chromium	(001032)	( )		mg/l		
Zinc	(001092)	( )		mg/l		
Copper	(001042)	( )		mg/l		
Lead	(017501)	( )		mg/l		
Cyanide	(000722)	( )		mg/l		
Penta		(X)	<2.0	ug/l	DK	10/14/87
		( )				
		( )				
		( )				
		( )				
		( )				
		( )				
		( )				
		( )				
		( )				

Remarks

*Date of Test Initiation

BUREAU OF POLLUTION CONTROL
SAMPLE REQUEST FORM

Lab Bench No. 1093

I. GENERAL INFORMATION: Facility Name Kerr McGee Wood Products
County Code 1680 Rowan NPDES Permit No. 90021
Discharge No. 001 Date Requested 8/87
Sample Point Identification Process water
Requested By Compliance Monitoring Data To S. Spengler
Type of Sample: Grab (X) Composite (Flow) (Time X) Other ( )

II. SAMPLE IDENTIFICATION:
Environment Condition Clear and hot Collected By David Hall
Where Taken From sampling structure

	Type	Parameters	Preservative	Date	Time
1.	Composite	Cr,Cu,As	5 ml HNO_3	8/11/87	115
2.	Grab	Oil & Grease	5 ml H_2SO_4	8/11/87	115
3.	Grab	Phenols	5 ml H_2SO_4	8/11/87	115
4.					
5.					

II. FIELD:

Analysis	Computer Code	Request	Results	Analyst	Date
pH	(000400)	(X)	5.44	DH	8/11/87
D.O.	(000300)	( )			
Temperature	(000010)	( )			
Residual Chlorine	(050060)	( )			
Flow	(074060)	(X)	.0396	DH	8/11/87

IV. TRANSPORTATION OF SAMPLE: Bus ( ) RO Vehicle ( ) Other ( )

V. LABORATORY: Received By Danny Ewert Date 8/12/87 Time 0930
Recorded By Dorothy Lewis Date Sent to State Office

Analysis	Computer Code	Request	Result	Analyst	Date Measured
BOD_5	(000310)	( )	mg/l		*
COD	(000340)	( )	mg/l		
TOC	(000680)	( )	mg/l		
Suspended Solids	(099000)	( )	mg/l		
TKN	(000625)	( )	mg/l		
Ammonia-N	(000610)	( )	mg/l		
Fecal Coliform(1)	(074055)	( )	colonies/100 ml		*
Fecal Coliform(2)	(074055)	( )	colonies/100 ml		*
Total Phosphorus	(000665)	( )	mg/l		
Oil and Grease(1)	(000550)	(X)	19.0 mg/l	GT	8/24/87
Oil and Grease(2)	(000550)	( )	mg/l		
Chlorides	(099016)	( )	mg/l		
Phenol	(032730)	(X)	400.0 mg/l	DE	9/4/87
Total Chromium	(001034)	(X)	30.0 ug/l mg/l	EP	8/19/87
Hex. Chromium	(001032)	( )	mg/l		
Zinc	(001092)	(X)	162.0 ug/l mg/l	EP	8/18/87
Copper	(001042)	(X)	30.0 ug/l mg/l	EP	8/18/87
Lead	(017501)	( )	mg/l		
Cyanide	(000722)	( )	mg/l		
Arsenic		(X)	4.04 ug/l	EP	8/22/87
		( )			
		( )			
		( )			
		( )			
		( )			
		( )			
		( )			
		( )			
		( )			

Remarks

*Date of Test Initiation

Lowndes

BUREAU OF POLLUTION CONTROL
SAMPLE REQUEST FORM Lab Bench No. 329

I. GENERAL INFORMATION: Facility Name Kerr McGee Wood Products
County Code 1680 NPDES Permit No. 90021
Discharge No. 001 Date Requested 3/87
Sample Point Identification Process water
Requested By Compliance Monitoring Data To S.Spengler
Type of Sample: Grab ( ) Composite (Flow) (Time X) Other ( )

II. SAMPLE IDENTIFICATION:
Environment Condition Cool and sunny Collected By Nancy Moore
Where Taken After weir in manhole

	Type	Parameters	Preservative	Date	Time
1.	Composite	Cr,Cu,As	5 ml HNO_3	3/12/87	945
2.	Grab	Oil & Grease	5 ml H_2SO_4	3/12/87	945
3.	Grab	Phenols	5 ml H_2SO_4	3/12/87	945
4.					
5.					

III. FIELD:

Analysis	Computer Code	Request	Results	Analyst	Date
pH	(000400)	(X)	6.8	NM	3/12/87
D.O.	(000300)	( )			
Temperature	(000010)	( )			
Residual Chlorine	(050060)	( )			
Flow	(074060)	(X)	.0246 MGD	NM	3/12/87

IV. TRANSPORTATION OF SAMPLE: Bus ( ) RO Vehicle ( ) Other ( )

V. LABORATORY: Received By Gloria Tatum Date 3/13/87 Time 0840
Recorded By Dorothy Lewis Date Sent to State Office 6/10/87

Analysis	Computer Code	Request	Result	Analyst	Date Measured
BOD_5	(000310)	( )	mg/l		*
COD	(000340)	( )	mg/l		
TOC	(000680)	( )	mg/l		
Suspended Solids	(099000)	( )	mg/l		
TKN	(000625)	( )	mg/l		
Ammonia-N	(000610)	( )	mg/l		
Fecal Coliform(1)	(074055)	( )	colonies/100 ml		*
Fecal Coliform(2)	(074055)	( )	colonies/100 ml		*
Total Phosphorus	(000665)	( )	mg/l		
Oil and Grease(1)	(000550)	(X)	< 5 mg/l	GT	4/1/87
Oil and Grease(2)	(000550)	( )	mg/l		
Chlorides	(099016)	( )	mg/l		
Phenol	(032730)	(X)	3.0 mg/l	JK&DE	3/30/87
Total Chromium	(001034)	(X)	< 50 ug/l	EP	4/18/87
Hex. Chromium	(001032)	( )	mg/l		
Zinc	(001092)	(X)	211 ug/l	EP	4/17/87
Copper	(001042)	(X)	< 30 ug/l	EP	4/20/87
Lead	(017501)	(X)	< 3 ug/l	EP	5/21/87
Cyanide	(000722)	( )	mg/l		
Nickel		(X)	< 50 ug/l	EP	4/21/87
Silver		(X)	< 30 ug/l	EP	4/21/87
Cadmium		(X)	8 ug/l	EP	4/20/87
Arsenic		(X)	5.8 ug/l	EP	6/8/87
		( )			
		( )			
		( )			
		( )			
		( )			
		( )			

Remarks

*Date of Test Initiation

BUREAU OF POLLUTION CONTROL

SAMPLE REQUEST FORM Lab Bench No. 997

PT

I. GENERAL INFORMATION: Facility Name Kerr McGee Wood Products
County Code 1680 Lowndes NPDES Permit No. 90021
Discharge No. 001 Date Requested 8/86
Sample Point Identification Effluent
Requested By Comp. Mon. Data To Steve Spengler
Type of Sample: Grab (X) Composite (Flow) (Time X) Other ( )

II. SAMPLE IDENTIFICATION:
Environment Condition Clear Collected By Kenny Hill
Where Taken At overflow weir inside manahole next to driveway

	Type	Parameters	Preservative	Date	Time
1.	Composite	Cr, Cu, As	5 ml HNO_3	8/14/86	0920
2.	Grab (2)	Oil & Grease	5 ml H_2SO_4	8/14/86	0920
3.	Grab	Phenols	5 ml H_2SO_4	8/14/86	0920
4.					
5.					

III. FIELD:

Analysis	Computer Code	Request	Results	Analyst	Date
pH	(000400)	(X)	10.1	KH	8/14/86
D.O.	(000300)	( )			
Temperature	(000010)	( )			
Residual Chlorine	(050060)	( )			
Flow	(074060)	(X)	.03 MGD	KH	8/14/86

IV. TRANSPORTATION OF SAMPLE: Bus ( ) RO Vehicle ( ) Other ( )

V. LABORATORY: Received By Jackie Key Date 8/15/86 Time 0930
Recorded By Lewis Date Sent to State Office 10/3/86

Analysis	Computer Code	Request	Result		Analyst	Date Measured
BOD_5	(000310)	( )		mg/1		*
COD	(000340)	( )		mg/1		
TOC	(000680)	( )		mg/1		
Suspended Solids	(099000)	( )		mg/1		
TKN	(000625)	( )		mg/1		
Ammonia-N	(000610)	( )		mg/1		
Fecal Coliform(1)	(074055)	( )		colonies/100 ml		*
Fecal Coliform(2)	(074055)	( )		colonies/100 ml		*
Total Phosphorus	(000665)	( )		mg/1		
Oil and Grease(1)	(000550)	(X)	< 5	mg/1	GT	9/3/86
Oil and Grease(2)	(000550)	(X)	< 5	mg/1	GT	9/3/86
Chlorides	(099016)	( )		mg/1		
Phenol	(032730)	(x)	0.28	mg/1	JK	8/19/86
Total Chromium	(001034)	(X)	< 0.03	mg/1	LC	9/2386
Hex. Chromium	(001032)	( )		mg/1		
Zinc	(001092)	( )		mg/1		
Copper	(001042)	(X)	0.07	mg/1	LC	9/23/86
Lead	(017501)	( )		mg/1		
Cyanide	(000722)	( )		mg/1		
Arsenic		(X)	0.006	mg/1	LC	9/30/86
		( )				
		( )				
		( )				
		( )				
		( )				
		( )				
		( )				
		( )				
		( )				

Remarks

*Date of Test Initiation

TABLE I

Phenol Levels

Columbus Facility

Date	KMCC DISCHARGE MGD	KMCC DISCHARGE Conc. (mg/l)	KMCC DISCHARGE Load (lbs/day)	POTW Influent (mg/l)	POTW Effluent (mg/l)	Remarks
10/20/86	0.005	3.3	0.14	0.21	0.08	Permit Limitation is
10/22/86	0.009	3.8	0.29	0.16	0.04	48.8 Lbs./day
10/24/86	0.043	48.0	17.54	0.23	0.09	
10/27/86	0.017	42.0	6.07	0.08	0.04	
10/29/86	0.053	58.0	26.13	0.23	0.06	
10/31/86	0.017	63.0	9.10	0.22	0.06	
Average Values	0.024	36.4	9.88	0.19	0.06	

Total Phenols .05 mg/l

$Q_{POTW} \approx 5$ mgd

$Q_{10_7} = 33$

limit = .008 mg/l

BUREAU OF POLLUTION CONT

SAMPLE REQUEST FORM

Lab Bench No. 1024

I. GENERAL INFORMATION: Facility Name Kerr McGee (P.T.)

County Code Lowndes 1680 NPDES Permit No. 90021

Discharge No. Date Requested

Sample Point Identification

Requested By Compliance Monitoring Data To S. Spengler

Type of Sample: Grab (X) Composite (Flow) (Time X) Other ( )

II. SAMPLE IDENTIFICATION:

Environment Condition Hot and cloudy Collected By James Hadley

Where Taken In eflfuent structure just before v-notch weir

	Type	Parameters	Preservative	Date	Time
1.	Composite	Cr, Cu, As	Cool, 5 ml HNO_3	8/15/85	1320
2.	Grab (2)	Oil & Grease	Cool, 5 ml H_2SO_4	8/15/85	1310/1325
3.					
4.					
5.					

III. FIELD:

Analysis	Computer Code	Request	Results	Analyst	Date
pH	(000400)	(X)	6.82	JH	8/15/85
D.O.	(000300)	( )			
Temperature	(000010)	( )			
Residual Chlorine	(050060)	( )			
Flow	(074060)	(X)	Unknown	JH	8/15/85

IV. TRANSPORTATION OF SAMPLE: Bus ( ) RO Vehicle ( ) Other ( )

V. LABORATORY: Received By DeJonnette King Date 8/16/85 Time 1000

Recorded By Dorothy Lewis Date Sent to State Office 9/10/85

Analysis	Computer Code	Request	Result		Analyst	Date Measured
BOD_5	(000310)	( )		mg/l		*
COD	(000340)	( )		mg/l		
TOC	(000680)	( )		mg/l		
Suspended Solids	(099000)	( )		mg/l		
TKN	(000625)	( )		mg/l		
Ammonia-N	(000610)	( )		mg/l		
Fecal Coliform(1)	(074055)	( )		colonies/100 ml		*
Fecal Coliform(2)	(074055)	( )		colonies/100 ml		*
Total Phosphorus	(000665)	( )		mg/l		
Oil and Grease(1)	(000550)	(X)	< 5	mg/l	GT	8/23/85
Oil and Grease(2)	(000550)	(X)	< 5	mg/l	GT	8/23/85
Chlorides	(099016)	( )		mg/l		
Phenol	(032730)	( )		mg/l		
Total Chromium	(001034)	(X)	< 0.01	mg/l	LC	9/5/85
Hex. Chromium	(001032)	( )		mg/l		
Zinc	(001092)	( )		mg/l		
Copper	(001042)	(X)	< 0.01	mg/l	LC	9/5/85
Lead	(017501)	( )		mg/l		
Cyanide	(000722)	( )		mg/l		
Arsenic		(X)	.016	mg/l	LC	9/9/85
		( )				
		( )				
		( )				
		( )				
		( )				
		( )				
		( )				
		( )				
		( )				

Remarks

*Date of Test Initiation

BUREAU OF POLLUTION CONTROL
SAMPLE REQUEST FORM

Lab Bench No. 202

I. GENERAL INFORMATION: Facility Name Kerr McGee Wood Preserving
County Code Lowndes 1680 NPDES Permit No.
Discharge No. Date Requested
Sample Point Identification Process wastewater
Requested By Pretreatment Data To S.Spengler
Type of Sample: Grab ( ) Composite (Flow) (Time) Other ( )

II. SAMPLE IDENTIFICATION:
Environment Condition Clear and mild Collected By J.Hadley&E.Richard
Where Taken In effluent structure after weir before entering city sewer

	Type	Parameters	Preservative	Date	Time
1.	Grab (2)	Oil & Grease	5 ml H_2SO_4-Cool	2-16-84	1015
2.	Grab	Phenol	5 ml H_2SO_4 from glass-cool	2-16-84	1016
3.	Composite	Cu,Cr,As	5 ml HNO_3-Cool	2-16-84	1020
4.	Grab	Creosote	Cool	2-16-84	1017
5.					

III. FIELD:

Analysis	Computer Code	Request	Results	Analyst	Date
pH	(000400)	(X)	6.86	ER	2-16-84
D.O.	(000300)	( )			
Temperature	(000010)	( )			
Residual Chlorine	(050060)	( )			
Flow	(074060)	(X)	Unknown	ER	2-16-84

IV. TRANSPORTATION OF SAMPLE: Bus ( ) RO Vehicle ( ) Other ( )

V. LABORATORY: Received By DeJonnette King Date 2-17-84 Time 0800
Recorded By Dorothy Lewis Date Sent to State Office 3-23-84

Analysis	Computer Code	Request	Result		Analyst	Date Measured
BOD_5	(000310)	( )		mg/l		*
COD^5	(000340)	( )		mg/l		
TOC	(000680)	( )		mg/l		
Suspended Solids	(099000)	( )		mg/l		
TKN	(000625)	( )		mg/l		
Ammonia-N	(000610)	( )		mg/l		
Fecal Coliform(1)	(074055)	( )		colonies/100 ml		*
Fecal Coliform(2)	(074055)	( )		colonies/100 ml		*
Total Phosphorus	(000665)	( )		mg/l		
Oil and Grease(1)	(000550)	(X)	138	mg/l	DK	2-17-84
Oil and Grease(2)	(000550)	(X)	33.2	mg/l	DK	2-17-84
Chlorides	(099016)	( )		mg/l		
Phenol	(032730)	(X)	0.67	mg/l	FB	2-17-84
Total Chromium	(001034)	(X)	< 0.02	mg/l	MDP	3-23-84
Hex. Chromium	(001032)	( )		mg/l		
Zinc	(001092)	(X)	0.11	mg/l	MDP	3-20-84
Copper	(001042)	(X)	< 0.02	mg/l	MDP	3-9-84
Lead	(017501)	( )		mg/l		
Cyanide	(000722)	( )		mg/l		
Arsenic		(X)	< .01	mg/l	MDP	2-28-84
Creosote		(X)	VOID			
		( )				
		( )				
		( )				
		( )				
		( )				
		( )				
		( )				
		( )				

Remarks Correct Name: Kerr McGee Chemical Forest Products Division - contact Paul Compton or Don Cetz

*Date of Test Initiation

BUREAU OF POLLUTION CONTROL
SAMPLE REQUEST FORM

Lab Bench No. 202

I. GENERAL INFORMATION: Facility Name Kerr McGee Wood Preserving
County Code Lowndes 1680 NPDES Permit No.
Discharge No. Date Requested
Sample Point Identification Process wastewater
Requested By Pretreatment Data To S.Spengler
Type of Sample: Grab ( ) Composite (Flow) (Time) Other ( )

II. SAMPLE IDENTIFICATION:
Environment Condition Clear and mild Collected By J.Hadley&E.Richard
Where Taken In effluent structure after weir before entering city sewer

	Type	Parameters	Preservative	Date	Time
1.	Grab (2)	Oil & Grease	5 ml H_2SO_4-Cool	12-16-84	1015
2.	Grab	Phenol	5 ml H_2SO_4 from glass-cool	2-16-84	1016
3.	Composite	Cu.Cr.As	5 ml HNO_3-Cool	2-16-84	1020
4.	Grab	Creosote	Cool	2-16-84	1017
5.					

III. FIELD:

Analysis	Computer Code	Request	Results	Analyst	Date
pH	(000400)	(X)	6.86	ER	2-16-84
D.O.	(000300)	( )			
Temperature	(000010)	( )			
Residual Chlorine	(050060)	( )			
Flow	(074060)	(X)	Unknown	ER	2-16-84

IV. TRANSPORTATION OF SAMPLE: Bus ( ) RO Vehicle ( ) Other ( )

V. LABORATORY: Received By DeJonnette King Date 2-17-84 Time 0800
Recorded By Dorothy Lewis Date Sent to State Office 3-23-84

Analysis	Computer Code	Request	Result		Analyst	Date Measured
BOD_5	(000310)	( )		mg/1		*
COD	(000340)	( )		mg/1		
TOC	(000680)	( )		mg/1		
Suspended Solids	(099000)	( )		mg/1		
TKN	(000625)	( )		mg/1		
Ammonia-N	(000610)	( )		mg/1		
Fecal Coliform(1)	(074055)	( )		colonies/100 ml		*
Fecal Coliform(2)	(074055)	( )		colonies/100 ml		*
Total Phosphorus	(000665)	( )		mg/1		
Oil and Grease(1)	(000550)	(X)	138	mg/1	DK	2-17-84
Oil and Grease(2)	(000550)	(X)	33.2	mg/1	DK	2-17-84
Chlorides	(099016)	( )		mg/1		
Phenol	(032730)	(X)	0.66	mg/1	FB	2-17-84
Total Chromium	(001034)	(X)	< 0.02	mg/1	MDP	3-23-84
Hex. Chromium	(001032)	( )		mg/1		
Zinc	(001092)	(X)	0.11	mg/1	MDP	3-20-84
Copper	(001042)	(X)	< 0.02	mg/1	MDP	3-9-84
Lead	(017501)	( )		mg/1		
Cyanide	(000722)	( )		mg/1		
Arsenic		(X)	< .01	mg/1	MDP	2-28-84
Creosote		(X)	VOID			
		( )				
		( )				
		( )				
		( )				
		( )				
		( )				
		( )				
		( )				

Remarks Correct Name: Kerr McGee Chemical Forest Products Division - contact Paul Compton or Don Cetz

*Date of Test Initiation

MISSISSIPPI STATE UNIVERSITY (Cont)

DATE: Feb. 8, 1984
SAMPLE NO.: # 1 & # 2
DATE RECEIVED: Janu. 20, 84
DESCRIPTION: The analysis of the waste water sample

FOREST PRODUCTS UTILIZATION LABORATORY
P.O. DRAWER FP
MISSISSIPPI STATE, MISSISSIPPI 39762
PHONE (601) 325-2116

NAME: Mr. B. W. Boisseau.
COMPANY: Kerr-McGee Chemical Company Forest Products Division, Columbus, MS
ADDRESS:
SPECIAL INSTRUCTIONS:

TESTS RUN:

- ✓ BOD
- ✓ COD
- ✓ Oil and Grease
- ✓ Total Phenols
- ✓ Pentachlorophenol
- ___ Dissolved Solids
- ✓ Total Solids
- ___ Suspended Solids
- ___ Mass Spectral Analysis
- ___ Copper
- ___ Chromium
- ___ Arsenic
- ___ Nickel
- ___ Water & Air Sampling
- ___ Formaldehyde Analysis
- ___ Tension
- ___ Compression
- ___ Static Bending
- ___ Moisture Content
- ___ Specific Gravity
- Other: PH, Ammonia

RESULTS:

Company Lab's #

Sample # 1 — out → 354
2 — In → 355.

Summary:—

Sample	In	out
(1) pH.	7.15.	7.10.
(2) Oil & Grease content	19.2 (mg/l)	7.2 (mg/l).
(3) PCP	7.20 (P.P.M)	0.007 (P.P.M).
(4) Total phenols.	11.00 (mg/l).	< 1 (mg/l)
(5) COD.	110.0 (mg/l)	10.0 (mg/l).
(6) T.T.S.	2.4 (mg/l)	8.8 (mg/l)
(7) BOD_5	46.7 (mg/l)	9.75 (mg/l).
(8) Ammonia nitrogen	0.21 (mg/l)	0.25 (mg/l).

SUBMITTED BY: Susmita V. Parikh

TOTAL CHARGES:

(2) samples for BOD_5 and Ammonia, state chemist Lab did analyse.

Total charges — $60.0 for BOD_5 and Ammonia for 2 Samples.

Warren S. Thompson, Director

United States Environmental Protection Agency
Washington, D. C. 20460

EPA NPDES Compliance Inspection Report

Form Approved
OMB No. 2040-0003
Approval Expires 7-31-85

Section A: National Data System Coding

Mnth Insp Sched'd

Transaction Code	NPDES	yr/mo/day	Inspection Type	Inspector	Fac Type
1 N 2 5	3 MS P 0 9 0 0 2 1 11	12 90 03 30 17	18 C	19 S	20 2 D E C

Remarks

FILE COPY

21 ... 66

Reserved	Facility Evaluation Rating	BI	QA	Reserved
67 69	70	71 N	72 N	73 74 75 80

Section B: Facility Data

Name and Location of Facility Inspected	Entry Time ☐ AM ☐ PM	Permit Effective Date
KERR-McGEE COLUMBUS, MISSISSIPPI	Exit Time/Date	5/23/89 Permit Expiration Date 5/22/94

Name(s) of On-Site Representative(s)	Title(s)	Phone No(s)
MR. DAVE ZOOK	ASSISTANT SUPERINTENDENT	

Name, Address of Responsible Official	Title	Contacted
MR. G.R. HARROD BOX 906 COLUMBUS, MISSISSIPPI 39701	SUPERINTENDENT Phone No. (601) 328-7551	☐ Yes ☒ No

Section C: Areas Evaluated During Inspection

(S = Satisfactory, M = Marginal, U = Unsatisfactory, N = Not Evaluated)

N	Permit	N	Flow Measurement	S	Pretreatment	S	Operations & Maintenance
S	Records/Reports	N	Laboratory	N	Compliance Schedules	N	Sludge Disposal
S	Facility Site Review	N	Effluent/Receiving Waters	S	Self-Monitoring Program	N	Other:

Section D: Summary of Findings/Comments *(Attach additional sheets if necessary)*

NO PROBLEMS WERE OBSERVED DURING THE INSPECTION.

I TOURED ALL PROCESS AREAS, PRETREATMENT, AND PERFORMED A RECORDS REVIEW (SEE INSPECTION REPORT DATED 3/23/88).

Name(s) and Signature(s) of Inspector(s)	Agency/Office/Telephone	Date
TODD S. EDWARDS	MDEQ/BPC 961-5171	4/9/90
Signature of Reviewer	Agency/Office	Date

Regulatory Office Use Only

Action Taken	Date	Compliance Status
FORWARDED INSPECTION REPORT TO FILE	4/10/90	☐ Noncompliance ☐ Compliance

EPA Form 3560-3 (Rev. 3-85) Previous editions are obsolete.

United States Environmental Protection Agency
Washington, D. C. 20460

EPA NPDES Compliance Inspection Report

Form Approved
OMB No. 2040-0003
Approval Expires 7-31-85

Section A: National Data System Coding

Math Insp

Transaction Code	NPDES	yr/mo/day	Inspection Type	Inspector	Fac Type	Sched'd
1 N 2 5	3 MS P 0 9 0 1 0 2 1 1 11	12 9 0 1 1 1 0 8 17	18 C	19 S	20 2	N 0 V

Remarks

21 66

Reserved	Facility Evaluation Rating	BI	QA	Reserved	
67 69	70 N	71 N	72 N	73 74	75 80

Section B: Facility Data

Name and Location of Facility Inspected	Entry Time / Exit Time/Date	Permit Effective Date / Permit Expiration Date
Kerr McGee - Wood preserving Columbus, Mississippi	Entry Time: 11:30 AM ☒ PM ☐ Exit Time/Date: 1:00 P.m. 11/8/90	Permit Effective Date: May 23, 1989 Permit Expiration Date: May 22, 1994

Name(s) of On-Site Representative(s)	Title(s)	Phone No(s)
Mr. J.J. Getz	Plant Manager	601/328-7551

Name, Address of Responsible Official	Title	Phone No.	Contacted
Mr. J.J. Getz Kerr McGee chemical Corporation Forest Products Division P.O Box 906 Columbus, Ms. 39701	Plant Manager	601 - 328 - 7551	☒ Yes ☐ No

Section C: Areas Evaluated During Inspection

(S = Satisfactory, M = Marginal, U = Unsatisfactory, N = Not Evaluated)

S	Permit	N	Flow Measurement	S	Pretreatment	S	Operations & Maintenance
U	Records/Reports	N	Laboratory	N	Compliance Schedules	N	Sludge Disposal
N	Facility Site Review	N	Effluent/Receiving Waters	N	Self-Monitoring Program	N	Other:

Section D: Summary of Findings/Comments (Attach additional sheets if necessary)

1 - Incorrect reporting of DMR parameter values (unintentional) due to incorrect calculations from Jan 1990 - May 1990. Recorrected values were sent and received by our office on Nov. 19, 1990 for reevaluation.

2 - Effluent waste water at the point of discharge to sewer system had oily sheen due to overload of oil & grease.

3 - Lots of accumulations of tarry black deposits on wall of sump at the point of discharge need to be scraped.

Permittee's records reporting indicate non-compliance

Name(s) and Signature(s) of Inspector(s)	Agency/Office/Telephone	Date
Nancy Jackson	B.P.C.	11/20/90

Signature of Reviewer	Agency/Office	Date
Nancy Jackson	B.P.C.	11/21/90

Regulatory Office Use Only

Action Taken	Date	Compliance Status
		☐ Noncompliance ☐ Compliance

EPA Form 3560-3 (Rev. 3-85) Previous editions are obsolete.

United States Environmental Protection Agency
Washington, D. C. 20460

EPA NPDES Compliance Inspection Report

Form Approved
OMB No. 2040-0003
Approval Expires 7-31-85

Section A: National Data System Coding (Mnth Insp / Sched'd)

Transaction Code	NPDES	yr/mo/day	Inspection Type	Inspector	Fac Type
1 N	2 5 3 MS P0 9 0 0 2 1 11	12 9 0 0 3 2 2 17	18 S M	19 S	20 2 MAR

Remarks: 21 ____ 66

Reserved	Facility Evaluation Rating	BI	QA	Reserved
67 ___ 69	70 N	71 N	72 N	73 ___ 74 75 ___ 80

Section B: Facility Data

Name and Location of Facility Inspected	Entry Time / Date	Permit Effective Date
Kerr McGee Forest Products 607 14th Street Columbus, Mississippi 39701	Entry Time: ☑ AM ☐ PM 11:30 Exit Time/Date:	5/23/89 Permit Expiration Date: 5/22/94

Name(s) of On-Site Representative(s)	Title(s)	Phone No(s).
B.W. BOISSEAU		(405) 270-2395

Name, Address of Responsible Official	Title	Contacted
Mr. G.R. HARROD Box 906 Columbus, Mississippi 39701	Plant Superintendent Phone No.	☐ Yes ☒ No

Section C: Areas Evaluated During Inspection
(S = Satisfactory, M = Marginal, U = Unsatisfactory, N = Not Evaluated)

N	Permit	N	Flow Measurement	N	Pretreatment	N	Operations & Maintenance
N	Records/Reports	N	Laboratory	N	Compliance Schedules	N	Sludge Disposal
N	Facility Site Review	S	Effluent/Receiving Waters	N	Self-Monitoring Program	N	Other:

Section D: Summary of Findings/Comments (Attach additional sheets if necessary)

Analytical results indicate permittee is in compliance with NPDES 90021 requirements.

Name(s) and Signature(s) of Inspector(s)	Agency/Office/Telephone	Date
D. Hall / D. Spurgeon	BOPC	3/22/90

Signature of Reviewer	Agency/Office	Date
[signature]	BOPC	5/11/90

Regulatory Office Use Only

Action Taken	Date	Compliance Status
		☐ Noncompliance ☐ Compliance

EPA Form 3560-3 (Rev. 3-85) Previous editions are obsolete.

United States Environmental Protection Agency
Washington, D. C. 20460

EPA NPDES Compliance Inspection Report

Form Approved
OMB No. 2040-0003
Approval Expires 7-31-85

Section A: National Data System Coding

Transaction Code	NPDES	yr/mo/day	Inspection Type	Inspector	Fac Type
1 N 2 5	3 MS 9 0 9 0 0 2 1 11	12 8 9 0 3 1 4 17	18 S	19 S	20 2

Remarks

21 66

Reserved	Facility Evaluation Rating	BI	QA	Reserved	
67 69	70	71 N	72 N	73 74	75 80

Section B: Facility Data

Name and Location of Facility Inspected	Entry Time ☐ AM ☐ PM	Permit Effective Date
KERR-McGEE CHEMICAL CORPORATION COLUMBUS, MISSISSIPPI	Exit Time/Date	5/1/84 Permit Expiration Date 4/30/89

Name(s) of On-Site Representative(s)	Title(s)	Phone No(s)

Name, Address of Responsible Official	Title	
MR. G.R. HARROD BOX 906 COLUMBUS, MISSISSIPPI 39701	PLANT SUPERINTENDENT Phone No.	Contacted ☐ Yes ☐ No

Section C: Areas Evaluated During Inspection

(S = Satisfactory, M = Marginal, U = Unsatisfactory, N = Not Evaluated)

N	Permit	N	Flow Measurement	N	Pretreatment	N	Operations & Maintenance
N	Records/Reports	N	Laboratory	N	Compliance Schedules	N	Sludge Disposal
N	Facility Site Review	S	(Effluent) Receiving Waters	N	Self-Monitoring Program	N	Other:

Section D: Summary of Findings/Comments *(Attach additional sheets if necessary)*

ANALYTICAL RESULTS INDICATE [redacted] THIS FACILITY IS IN COMPLIANCE WITH PT 90021.

Name(s) and Signature(s) of Inspector(s)	Agency/Office/Telephone	Date
EARL RICHARD	MDNR/BPC	3/14/89
Signature of Reviewer	**Agency/Office**	**Date**
TODD S. EDWARDS	MDNR/BPC/961-5171	5/19/89

Regulatory Office Use Only

Action Taken	Date	Compliance Status
ANALYTICAL RESULTS FORWARDED TO PERMITTEE.	5/24/89	☐ Noncompliance ☒ Compliance

United States Environmental Protection Agency
Washington, D. C. 20460

EPA NPDES Compliance Inspection Report

Form Approved
OMB No. 2040-0003
Approval Expires 7-31-85

Section A: National Data System Coding

Transaction Code	NPDES	yr/mo/day	Inspection Type	Inspector	Fac Type
1 N 2 5	3 M S P 0 9 0 0 2 1 11	12 8 8 0 8 1 6 17	18 S	19 S	20 2

Remarks

21 66

Reserved	Facility Evaluation Rating	BI	QA	Reserved	
67 69	70	71 N	72 N	73 74	75 80

Section B: Facility Data

Name and Location of Facility Inspected	Entry Time ☐ AM ☐ PM	Permit Effective Date
KERR-McGEE COLUMBUS, MISSISSIPPI	Exit Time/Date	5/1/84 Permit Expiration Date 4/30/89

Name(s) of On-Site Representative(s)	Title(s)	Phone No(s)

Name, Address of Responsible Official	Title	
MR. PETE CREEKMORE 607 14TH ST. NORTH - BOX 906 COLUMBUS, MISSISSIPPI 39701	Phone No. (601) 328-7551	Contacted ☐ Yes ☐ No

Section C: Areas Evaluated During Inspection

(S = Satisfactory, M = Marginal, U = Unsatisfactory, N = Not Evaluated)

N	Permit	N	Flow Measurement	N	Pretreatment	N	Operations & Maintenance
N	Records/Reports	N	Laboratory	N	Compliance Schedules	N	Sludge Disposal
N	Facility Site Review	U	(Effluent) Receiving Waters	N	Self-Monitoring Program	N	Other:

Section D: Summary of Findings/Comments *(Attach additional sheets if necessary)*

ANALYTICAL RESULTS INDICATE THAT PERMITTEE IS NOT IN COMPLIANCE WITH PT 90021 :

PARAMETER	PERMIT LIMIT	ANALYTICAL RESULTS
PHENOL	48.8 LBS/DAY	56.3 LBS/DAY

Name(s) and Signature(s) of Inspector(s)	Agency/Office/Telephone	Date
NANCY MOORE	MDNR/BPC	8/16/88

Signature of Reviewer	Agency/Office	Date
Jill S. Elrod	MDNR/BPC 961-5171	10/26/88

Regulatory Office Use Only

Action Taken	Date	Compliance Status
		☒ Noncompliance ☐ Compliance

EPA Form 3560-3 (Rev. 3-85) Previous editions are obsolete.

EPA

United States Environmental Protection Agency
Washington, D.C. 20460

NPDES Compliance Inspection Report

OMB No. 2040-0003
Approval Expires 7-31-88

Section A: National Data System Coding

Transaction Code	NPDES	yr/mo/day	Inspection Type	Inspector	Fac Type
1 N	2 5 3 M S P 0 0 9 0 2 2 1 11	12 8 8 0 3 2 4 17	18 S	19 S	20 2

Remarks

21

Reserved	Facility Evaluation Rating	BI	QA	Reserved	
67 69	70	71 N	72 N	73 74	75 80

Section B: Facility Data

Name and Location of Facility Inspected	Entry Time	Permit Effective Date
KERR-McGEE COLUMBUS, MISSISSIPPI	☒ AM ☐ PM 11:15	5/1/89
	Exit Time/Date	Permit Expiration Date 4/30/89

Name(s) of On-Site Representative(s)	Title(s)	Phone No(s)

Name, Address of Responsible Official	Title	
MR. PETE CREEKMORE 607 14TH ST. N. - BOX 906 COLUMBUS, MISSISSIPPI 39701	Phone No. (601) 328-7551	Contacted ☐ Yes ☐ No

Section C: Areas Evaluated During Inspection

(S = Satisfactory, M = Marginal, U = Unsatisfactory, N = Not Evaluated)

N	Permit	N	Flow Measurement	N	Pretreatment	N	Operations & Maintenance
N	Records/Reports	N	Laboratory	N	Compliance Schedules	N	Sludge Disposal
N	Facility Site Review	S	Effluent/Receiving Waters	N	Self-Monitoring Program	N	Other:

Section D: Summary of Findings/Comments *(Attach additional sheets if necessary)*

FACILITY IN COMPLIANCE. SEE ATTACHED LABORATORY RESULTS.

Name(s) and Signature(s) of Inspector(s)	Agency/Office/Telephone	Date
NANCY MOORE	MDNR/RPC	3/24/88

Signature of Reviewer	Agency/Office	Date
M S. Edwards	MDNR/RPC 961-5171	5/10/88

Regulatory Office Use Only

Action Taken	Date	Compliance Status
		☐ Noncompliance ☐ Compliance

EPA Form 3560-3 (Rev. 3-85) Previous editions are obsolete.

EPA

United States Environmental Protection Agency
Washington, D.C. 20460

NPDES Compliance Inspection Report

OMB No. 2040-0003
Approval Expires 7-31-88

Section A: National Data System Coding

Transaction Code	NPDES	yr/mo/day	Inspection Type	Inspector	Fac Type
1 N	2 5 3 M S P 1 0 9 0 0 2 1 11	12 8 8 0 3 2 3 17	18 C	19 S	20 2

Remarks

21

Reserved	Facility Evaluation Rating	BI	QA	Reserved	
67 69	70	71 N	72 N	73 74	75 80

Section B: Facility Data

Name and Location of Facility Inspected	Entry Time ☐ AM ☐ PM	Permit Effective Date
KERR-McGEE CHEMICAL CORPORATION FOREST PRODUCTS DIVISION COLUMBUS, MISSISSIPPI	Exit Time/Date	5/1/84 Permit Expiration Date 4/30/90

Name(s) of On-Site Representative(s)	Title(s)	Phone No(s)

Name, Address of Responsible Official	Title	Contacted
PETE CREEKMORE 607 14TH ST. NORTH BOX 906 COLUMBUS, MISSISSIPPI 39701	PLANT SUPERINTENDENT Phone No. (601) 328-7551	☐ Yes ☒ No

Section C: Areas Evaluated During Inspection

(S = Satisfactory, M = Marginal, U = Unsatisfactory, N = Not Evaluated)

N	Permit	N	Flow Measurement	N	Pretreatment	N	Operations & Maintenance
S	Records/Reports	N	Laboratory	N	Compliance Schedules	N	Sludge Disposal
S	Facility Site Review	N	Effluent/Receiving Waters	N	Self-Monitoring Program	N	Other:

Section D: Summary of Findings/Comments (Attach additional sheets if necessary)

THIS FACILITY WAS NOT IN OPERATION AT THE TIME OF MY INSPECTION AS THEY HAVE BEEN CONSTRUCTING A DRIP PAD FOR THEIR OPERATIONS. MR. DON GEE, THE FACILITY REPRESENTATIVE, SAID THAT THEIR LAST TREATED BATCH OCCURED ON DECEMBER 5, 1987.

THE ONLY WATER BEING TREATED WAS RAINWATER AND BLOWDOWN FROM THEIR CLEANING OPERATIONS. THE ONLY THING OF CONCERN WAS A THICK BLACK SLUDGE COVERING THE INITIAL CLARIFICATION PIT. THIS DID NOT APPEAR TO BE AFFECTING TREATMENT EFFICIENCY, HOWEVER.

THEIR DISCHARGE MONITORING RECORDS DATED BACKED TO MAY OF 1984, MORE THAN THE REQUISITE THREE (3) YEARS AS REQUIRED BY THEIR PT PERMIT.

Name(s) and Signature(s) of Inspector(s)	Agency/Office/Telephone	Date
TODD S. EDWARDS	MDNR / BPC	3/23/88

Signature of Reviewer	Agency/Office	Date
Todd S. Edwards	MDNR / BPC 961-5171	3/28/88

Regulatory Office Use Only

Action Taken	Date	Compliance Status
		☐ Noncompliance ☐ Compliance

EPA Form 3560-3 (Rev. 3-85) Previous editions are obsolete.

Item D

EPA

United States Environmental Protection Agency
Washington, D.C. 20460

NPDES Compliance Inspection Report

Form Approved
OMB No. 2040-0003
Approval Expires 7-31-85

Section A: National Data System Coding

Transaction Code	NPDES	yr/mo/day	Inspection Type	Inspector	Fac Type
1 N	2 5 3 X	12 86 08 14 17	18 S	19 5	20 2

Remarks: PRETREATMENT PERMIT NO PT90021

Reserved | Facility Evaluation Rating | BI | QA | Reserved
67 | 70 | 71 N | 72 N | 73 | 74 | 75 | 80

Section B: Facility Data

Name and Location of Facility Inspected	Entry Time / Exit Time/Date	Permit Effective Date / Permit Expiration Date
Kerr-McGee Chemical Corp P.O. Box 906 Columbus, MS. 39701	Entry Time ☐ AM ☐ PM Exit Time/Date	5-1-84 4-30-89

Name(s) of On-Site Representative(s)	Title(s)	Phone No(s)

Name, Address of Responsible Official	Title / Phone No.	Contacted
MR. JEFFREY H. Bull KERR-McGee Center Oklahoma City, Oklahoma 73125	MGR, ENVIRONMENTAL & REGULATORY AFFAIRS 405-270-2395	☐ Yes ☐ No

Section C: Areas Evaluated During Inspection

(S = Satisfactory, M = Marginal, U = Unsatisfactory, N = Not Evaluated)

N	Permit	N	Flow Measurement	N	Pretreatment	N	Operations & Maintenance
N	Records/Reports	N	Laboratory	N	Compliance Schedules	N	Sludge Disposal
N	Facility Site Review	S	Effluent/Receiving Waters	N	Self-Monitoring Program		Other:

Section D: Summary of Findings/Comments (Attach additional sheets if necessary)

The attached analytical laboratory results indicate that the facility was in compliance with Pretreatment Permit No. PT90021

Name(s) and Signature(s) of Inspector(s)	Agency/Office/Telephone	Date
KENNY Hill		8/14/86

Signature of Reviewer	Agency/Office	Date
Wm. Stephen Spezia	MDNR/BPC	10/21/96

Regulatory Office Use Only

Action Taken	Date	Compliance Status
		☐ Noncompliance ☐ Compliance

EPA Form 3560-3 (Rev. 3-85) Previous editions are obsolete.

EPA

United States Environmental Protection Agency
Washington, D.C. 20460

NPDES Compliance Inspection Report

Form Approved
OMB No. 2040-0003
Approval Expires 7-31-85

Section A: National Data System Coding

Transaction Code	NPDES	yr/mo/day	Inspection Type	Inspector	Fac Type
1 N	2 5 3 [X] 11	12 8 5 0 8 1 5 17	18 S	19 S	20 Z

Remarks: PRETREATMENT PERMIT MOPT9002 / MISSISSIPPI (21–65)

Reserved	Facility Evaluation Rating	BI	QA	Reserved
67 69	70	71 N	72 N	73 74 75 80

Section B: Facility Data

Name and Location of Facility Inspected	Entry Time ☐ AM ☐ PM	Permit Effective Date
Kerr-McGEE CHEMICAL CORP. FOREST PRODUCTS DIVISION COLUMBUS, MS	Exit Time/Date	5-1-84
		Permit Expiration Date: 4-30-89

Name(s) of On-Site Representative(s)	Title(s)	Phone No(s)

Name, Address of Responsible Official	Title	Contacted
MR. P.C. Gaskin, Kerr-McGee Chemical Corp, Kerr-McGee Center, Oklahoma City, Oklahoma 73125	ENV. & QUALITY CONTROL	☐ Yes ☐ No
	Phone No.: 405-270-2395	

Section C: Areas Evaluated During Inspection

(S = Satisfactory, M = Marginal, U = Unsatisfactory, N = Not Evaluated)

N	Permit	N	Flow Measurement	N	Pretreatment	N	Operations & Maintenance
N	Records/Reports	N	Laboratory	N	Compliance Schedules	N	Sludge Disposal
N	Facility Site Review	S	Effluent/Receiving Waters	N	Self-Monitoring Program		Other:

Section D: Summary of Findings/Comments (Attach additional sheets if necessary)

The attached analytical results indicate that the facility was in compliance with Pretreatment Permit No. PT9002

Name(s) and Signature(s) of Inspector(s)	Agency/Office/Telephone	Date
JAMES HADLEY	MDNR-BPC	8-15-85

Signature of Reviewer	Agency/Office	Date
Wm Stephen Spurgin	MDNR-BPC	9-16-85

Regulatory Office Use Only

Action Taken	Date	Compliance Status
		☐ Noncompliance ☐ Compliance

EPA Form 3560-3 (Rev. 3-85) Previous editions are obsolete.

BUREAU OF POLLUTION CONTROL
Report of Inspection
Wood Preservers

Name of Company KERR MCGEE CHEMICAL FOREST PRODUCTS DIVISION

Plant Location 14 & 20 ST. Telephone No. 328-7551

Person Contacted PAUL COMPTON

What is the average production rate from this operation? 51569.4 FT^3/month
618833 FT^3 last 12 months

What type of preservative is used? (ex. Pentachlorophenol, creosote, CCA (copper-chromium-arsenic), or etc.) _____

Is there evidence of a discharge point? YES

If yes, elaborate. PROCESS DISCHARGE ENTERS CITY SEWER FROM POLISHING POND.

Is there evidence of significant contaminated runoff from property? _____

If yes, elaborate. THERE IS AN OIL SHEEN ON SOME OF THE RUNOFF.

Describe existing treatment or control devices. PRIMARY AND SECONDARY OIL-WATER SEPARATORS FOLLOWED BY AN AERATION POND FOLLOWED BY A POLISHING POND THEN TO CITY SEWER.

Are all oil and chemical storage vessels properly diked? YES.

Please provide a sketch of the yard area, treatment system, receiving streams, and etc. SEE ATTACHMENT

General remarks or recommendations concerning this operation. _____

_____

Inspector(s) EARL RICHARD/JAMES HADLEY

Date FEBRUARY 16th, 1984

Actual Prod[redacted]
for past 12 months

[redacted]

83 Feb.	83690
March	41234
April	29774
May	33511
June	46438
July	41900
Aug	50233
Sept.	78027
Oct	12173
Nov.	63489
Dec.	30012
84 Jan	88352
Total	618833 ft³

Kerr McGee

~~618833~~

~~618833~~

KERR-MCGEE CHEMICAL CORP
COLUMBUS PLANT
PROCESS AND WASTEWATER
FLOW DIAGRAM
1/19/84

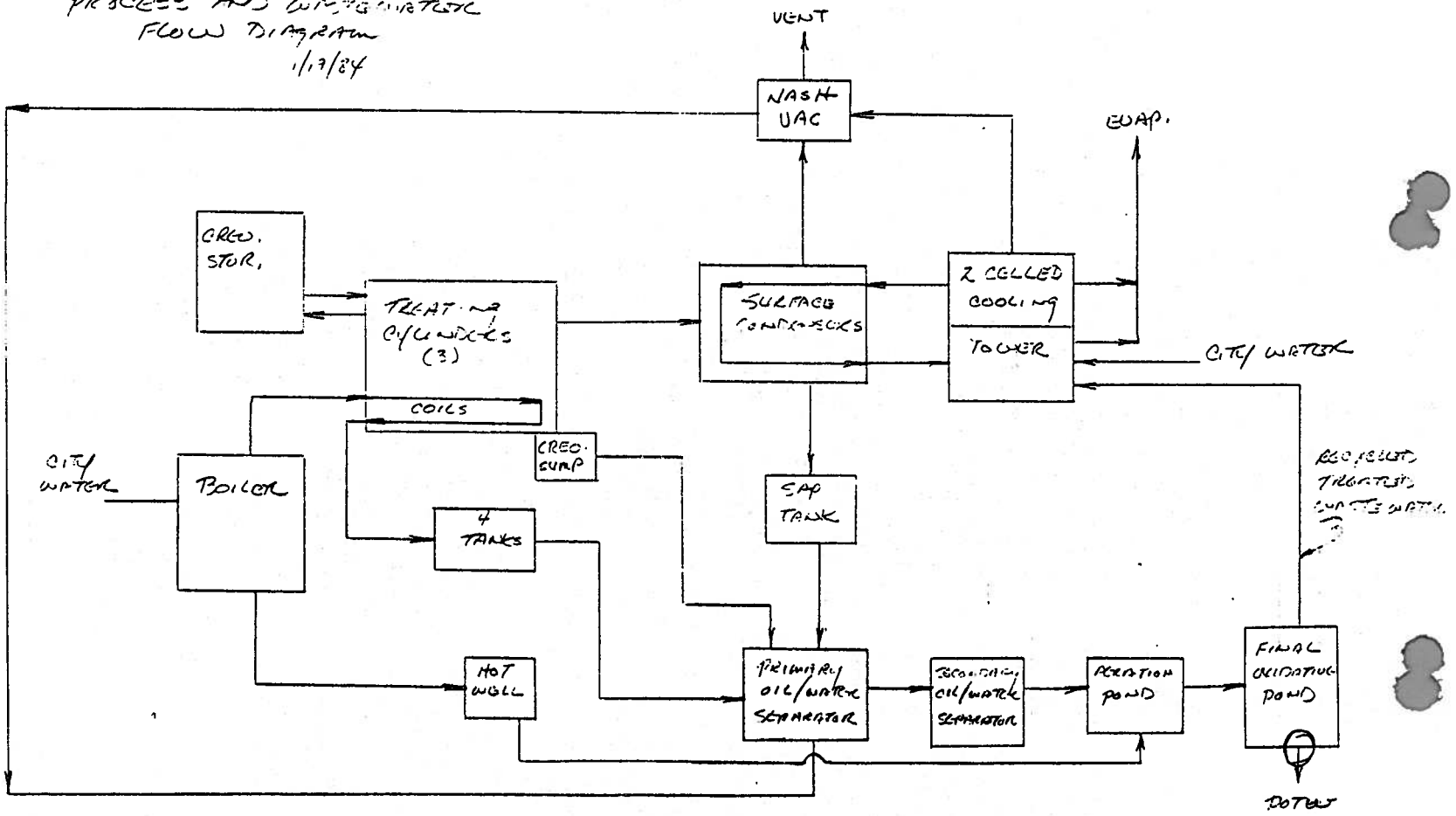

Runoff enters ditch along 14th St.

File Co
Lowndes Co

BUREAU OF POLLUTION CONTROL
Report of Inspection
Wood Preservers

Name of Company Kerr McGee

Plant Location Columbus at 14th Avenue Telephone No. _____

Person Contacted Mr. Lowe, Plant Manager

What is the average production rate from this operation? 2.5 million CF/Year

What type of preservative is used? (ex. Pentachlorophenol, creosote, CCA (copper-chromium-arsenic), or etc.) Creosote

Is there evidence of a discharge point? Yes

If yes, elaborate. Pretreated wastewater is discharged to city sewer system

NOTE'' Wastewater generated is from boiler blowdown, 25,000 gallons/day are used in processing dry wood and if wood (green) needs seasoning approximately 30-35,000 gallons/day are used.

Is there evidence of significant contaminated runoff from property? Yes

If yes, elaborate. A substantial amount of disolored water, draining from property to drainage ditch. Three drainage ditches drain 90 acres of property. Potential surface run-off also.

Describe existing treatment or control devices. ApiSeparator→Neutrolizide Cell one (2 1/2' gravel and sand)→Cell Two Aerated Cell→Polishing cell→City's sewer, creosote is recaptured.

Are all oil and chemical storage vessels properly diked? Yes, (Work Tanks (3) 30,000 gallons capacity @ 4 storage tanks, 2 in use; Approximately 300,000 gallons of material on hand most of the time)

Please provide a sketch of the yard area, treatment system, receiving streams, and etc.

SEE ATTACHED SHEETS

- General remarks or recommendations concerning this operation. ~~Surface run-off should be analysed to determine concentrations of chemicals, etc. in run-off.~~ Also large volume of material inside of dikes and retainer walls potential surface run-off problem. Plans are being made to upgrade primary treatment.

Inspector(s) J. Hadley & E. Richard

DW

Date June 2nd, 1981

Please send copy of report to:

Mr. Pete Caskin, Chemist
Kerr McGee
P.O. BOX 25861
OK. City, OK 73125

Telephone # 1-405-270-2395

Flow Diagram

N: Neutralizing Tank

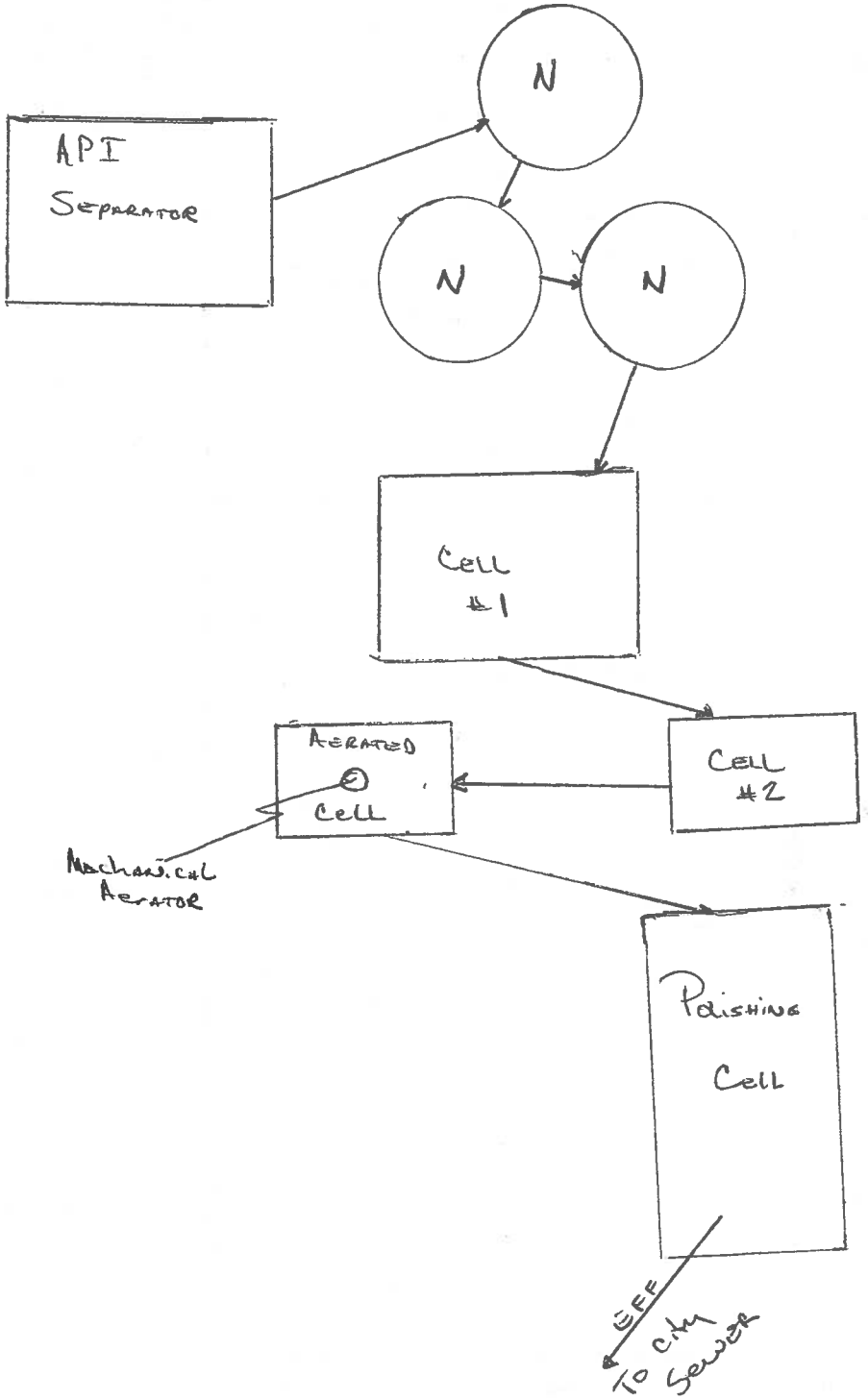

EAST

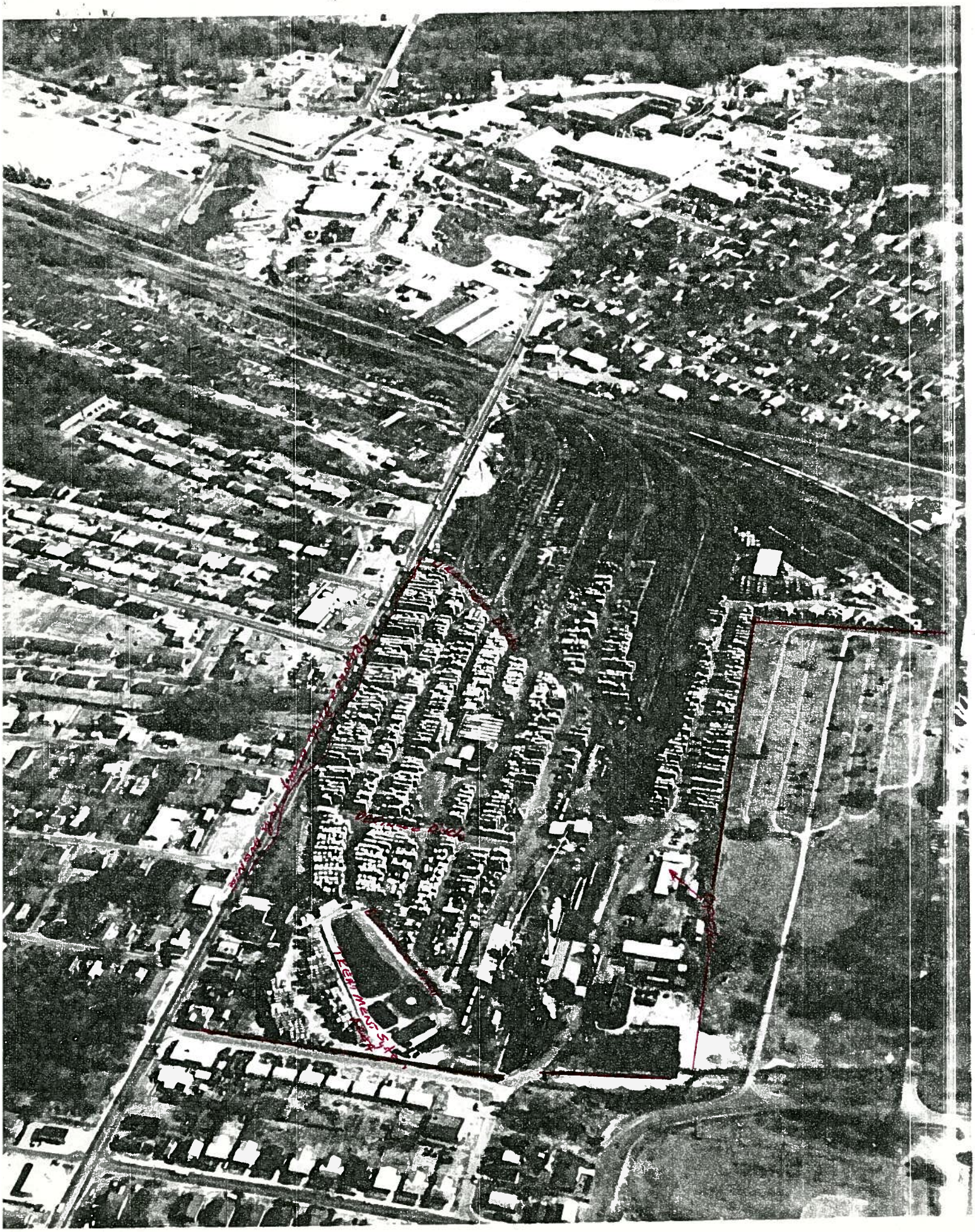

WEST

1. Name and address of facility:

   Kerr-McGee Chemical Corporation
   Columbus Wood Preserving Plant
   14th Avenue and 20th Street, North
   P.O. Box 906
   Columbus, MS 39701

   Plant Manager: G. D. Lowe

   Environmental Contact: P. C. Gaskin at (405) 270-2395

2. State of Mississippi Air Pollution Control Permit No. 1680-00020

3. Creosote is used as the preservative in the pressure treatment of wood products, namely utility poles and railroad cross ties.

   SIC 2491 Wood Preserving

   A schematic process diagram is attached.

4. Process waste water flow: The volume varies depending on treatment process, rainfall and evaporation rates. An overall average is estimated at 45,000 gpd.

   Sanitary waste water flow: A conservative estimate of 60 gpd per employee results in a total volume estimate of 3,000 gpd.

5. Pretreatment standards for the Timber Products industry, as promulgated January 28, 1981, consist of values for two parometers, oil and grease, and pH.

   The following analyses are from samples taken by plant personnel in 1981 and analyzed by the Mississippi Forest Products Utilization Laboratory, Mississippi State University. All values in PPM.

DATE	COD	PHENOL	OIL & GREASE	pH
4/23/81	347.2	74.50	14.9	7.5
6/15/81	211.4	0.22	8.3	6.6
8/04/81	72.0	0.03	10.1	8.9
9/03/81	176.0	0.11	11.5	7.9
10/22/81	46.9	0.15	26.1	7.7

6. Questions 6 and 7 are not applicable at this time.

7. N/A

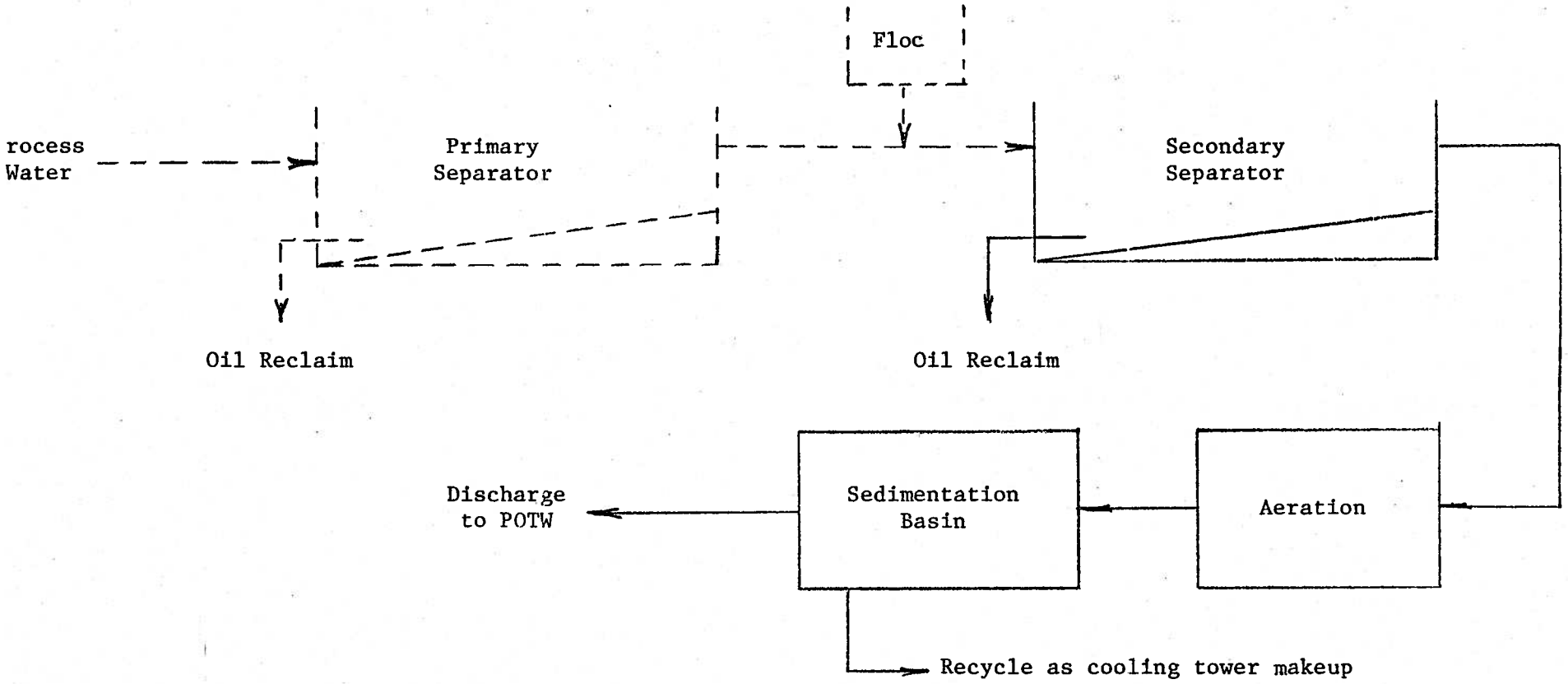

Columbus Wastewater Pretreatment Facilities

Estimated Completion: May 1982

——— Existing

– – – – New

KERR - McGEE CHEMICAL CORPORATION

FOREST PRODUCTS DIVISION

COLUMBUS, MISSISSIPPI

JANUARY 1982

Attachment

PROCESS FLOW DIAGRAM

NOVEMBER 1981

Columbus Wood Preserving Plant
Kerr-McGee Chemical Corp., FPD

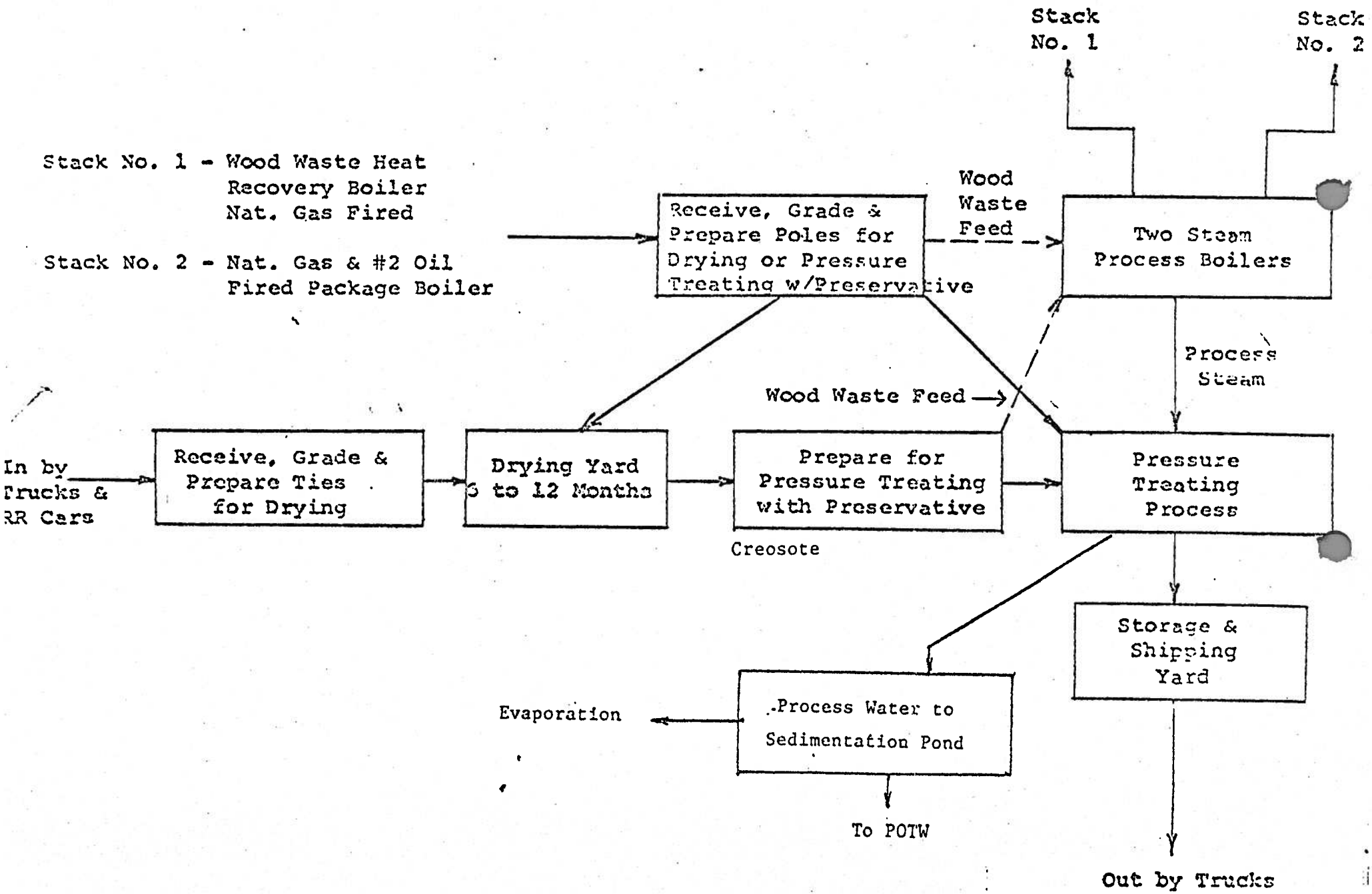

Table No. 2-3

KMCC-FPD Facility - Columbus, MS

Month/Year - December 1990

FACIILITY DISCHARGE MONITORING RECORD

Permit Requirement		BOD		O&G		Phenols		TSS		pH (Max)	pH (Min)
Unit of Measurement		XXXXXXX	XXXXXXX	XXXXXXX	XXXXXXX	XXXXXXX	XXXXXXX	XXXXXXX	XXXXXXX	XXXXXXX	XXXXXXX
DATE	FLOW	mg/1	lbs.	mg/1	lbs.	mg/1	lbs.	mg/1	lbs.	SU	SU
1	39750										
2	39750						0.00				
3	39750			18.00		115.00	38.12				
4	94000			30.00		70.00	54.88				
5	76250						0.00				
6	76250	450		157.00		100.00	63.59	24.00			
7	41375						0.00				
8	41375						0.00				
9	41375						0.00				
10	41375						0.00				
11	75000						0.00				
12	57125						0.00				
13	57125	732					0.00	4.00			
14	92488						0.00				
15	92488						0.00				
16	92488						0.00				
17	92488			66.00		127.44	98.30				
18	38550						0.00				
19	67000	450		51.00		117.20	65.49	120.00		0.70	
20	39000						0.00				
21	51000			54.00		124.51	52.96				
22	51000						0.00				
23	51000						0.00				
24	51000						0.00				
25	51000						0.00				
26	51000			81.00		44.77	19.04				
27	51000	135		90.00		28.13	11.96	86.00		0.68	
28	30000			68.00		83.83	20.97				
29	28000						0.00				
30	28000						0.00				
31	28000						0.00				
Avg.	55,032	442		68		90	14	59			
Max.	94,000	732		157.00		127.44	98.30	120.00			
Min.	28,000	135		18.00		28.13		4.00			

Table No. 2-3
KMCC-FPD Facility - Columbus, MS
Month/Year - November 1990

FACILITY DISCHARGE MONITORING RECORD
(Page 1 of 1)

Permit Requirement		BOD		O&G		Phenols		TSS		pH (Max)	pH (Min)
Unit of Measurement		XXXXXXX	XXXXXXX	XXXXXXX	XXXXXXX	XXXXXXX	XXXXXXX	XXXXXXX	XXXXXXX	XXXXXXX	XXXXXXX
DATE	FLOW	mg/1	lbs.	mg/1	lbs.	mg/1	lbs.	mg/1	lbs.	SU	SU
1	25320	465		31.00		130.00		17.00			
2	28670						0.00				
3	36600						0.00				
4	36600						0.00				
5	48650			12.00		430.00	174.47				
6	68570			32.00		30.00	17.16				
7	65750						0.00				
8	77000	30		7.40		14.00	8.99	6.00			
9	48860						0.00				
10	35600						0.00				
11	35600						0.00				
12	26850						0.00				
13	28390			28.00		21.00	4.97				
14	32680						0.00				
15	29780	60		4.20		5.00	1.24	15.00			
16	30630						0.00				
17	28620						0.00				
18	28620						0.00				
19	30320						0.00				
20	38680			50.00		80.00	25.81				
21	29780						0.00				
22	28600						0.00				
23	28600						0.00				
24	28600						0.00				
25	28600						0.00				
26	48560			5.10		40.00	16.20				
27	50500			13.00		95.00	40.01				
28	44600	390		56.00		120.00	44.64	20.00			
29	52500			22.00		100.00	43.79				
30	50250						0.00				
31							0.00				
Avg.	39,079	236		24		97	13	15			
Max.	77,000	465		56.00		430.00	174.47	20.00			
Min.	25,320	30		4.20		5.00		6.00			

Table No. 2-3
KMCC-FPD Facility - Columbus, MS
Month/Year - October 1990

FACIILITY DISCHARGE MONITORING RECORD
(Page 1 of 1)

Permit Requirement		BOD		O&G		Phenols		TSS		pH (Max)	pH (Min)
Unit of Measurement		XXXXXXX	XXXXXXX	XXXXXXX	XXXXXXX	XXXXXXX	XXXXXXX	XXXXXXX	XXXXXXX	XXXXXXX	XXXXXXX
DATE	FLOW	mg/1	lbs.	mg/1	lbs.	mg/1	lbs.	mg/1	lbs.	SU	SU
1	25000			9.90		0.78	0.16				
2	19000			73.00		138.00	21.87				
3	11000	645					0.00	25.00			
4	11000			55.00		150.00	13.76				
5	46429						0.00				
6	46429						0.00				
7	46429						0.00				
8	46429	690		10.00		8.00	3.10	14.00			
9	46429			52.00		158.00	61.18				
10	46429						0.00				
11	46429						0.00				
12	47125			88.00		93.00	36.55				
13	47125						0.00				
14	47125						0.00				
15	47125	405		13.00		68.00	26.73	17.00			
16	77000			35.00		78.00	50.09				
17	81000						0.00				
18	68083			2.10		54.00	30.66				
19	68083						0.00				
20	68083						0.00				
21	68083						0.00				
22	68083			16.00		55.00	31.23				
23	68083			51.00		53.00	30.09				
24	77500						0.00				
25	77500	480		81.00		125.00	80.79	21.00			
26	38500						0.00				
27	38500						0.00				
28	38500						0.00				
29	38500			7.50		93.00	29.86				
30	36750			47.00		78.00	23.91				
31	35270						0.00				
Avg.	49,259	555		38.61		82.27		19.25			
Max.	77,500	690		88.00		125.00	80.79	25.00			
Min.	11,000	405		2.10		0.78		14.00			

Table No. 2-3
KMCC-FPD Facility - Columbus, MS
Month/Year - August 1990

FACILITY DISCHARGE MONITORING RECORD
(Page 1 of 1)

Permit Requirement		BOD		O&G		Phenols		TSS		pH (Max)	pH (Min)
Unit of Measurement		XXXXXXX	XXXXXXX	XXXXXXX	XXXXXXX	XXXXXXX	XXXXXXX	XXXXXXX	XXXXXXX	XXXXXXX	XXXXXXX
DATE	FLOW	mg/1	lbs.	mg/1	lbs.	mg/1	lbs.	mg/1	lbs.	SU	SU
1	5500						0.00				
2	10000	1800		46.00		515.00	42.95	5.00			
3	9500						0.00				
4	5333						0.00				
5	5333						0.00				
6	5333			11.70		5.60	0.25				
7	5500			1.30		33.00	1.51				
8	15000						0.00				
9	14000	276		24.30		2.36	0.28	7.00			
10	12500						0.00				
11	17833						0.00				
12	17833						0.00				
13	17833			16.00		810.00	120.47				
14	10900			15.00		680.00	61.82				
15	15100						0.00				
16	11500	2160		4.30		358.00	34.34	6.00			
17	7500						0.00				
18	1750						0.00				
19	1750						0.00				
20	1750			7.20		255.00	3.72				
21	3750			2.00		255.00	7.98				
22	11500	870					0.00	25.00			
23	20000			5.20		295.00	49.21				
24	3500						0.00				
25	14167						0.00				
26	14167						0.00				
27	14167			20.00		540.00	63.80				
28	17000			8.50		505.00	71.60				
29	3200						0.00				
30	8500	2340		5.30		508.00	36.01	11.00			
31	9000						0.00				
Avg.	10,023	1,489		12.83		366.30		10.80			
Max.	20,000	2340		46.00		810.00	120.47	25.00			
Min.	1,750	276		1.30		2.36		5.00			

Table No. 2-3
KMCC-FPD Facility - Columbus, MS
Month/Year - July 1990

FACIILITY DISCHARGE MONITORING RECORD
(Page 1 of 1)

Permit Requirement		BOD		O&G		Phenols		TSS		pH (Max)	pH (Min)	Cu		Cr		As	
Unit of Measurement		XXXXXXX	XXXXXXX	XXXXXXX	XXXXXXX	XXXXXXX	XXXXXXX	XXXXXXX	XXXXXXX	XXXXXXX	XXXXXXX	XXXXXXX	XXXXXXX	XXXXXXX	XXXXXXX	XXXXXXX	XXXXXXX
DATE	FLOW	mg/1	lbs.	mg/1	lbs.	mg/1	lbs.	mg/1	lbs.	SU	SU	mg/1	lbs.	mg/1	lbs.	mg/1	lbs.
1	11500						0.00										
2	11500			29.00		9.00	0.86										
3	1000						0.00										
4	1000						0.00										
5	4500	30		16.00		13.00	0.49	16.00									
6	4500			128.00		223.00	8.37					0.07		0.02		0.003	
7	4500						0.00										
8	11500						0.00										
9	11500			27.00		80.00	7.67										
10	29500			240.00		298.00	73.32										
11	9000						0.00										
12	11000	1260		181.00		273.00	25.05	37.00									
13	31000						0.00										
14	8333						0.00										
15	8333						0.00										
16	8333			25.00		365.00	25.37										
17	10000						0.00										
18	3000			0.30		11.40	0.29										
19	6000	720		30.00		207.00	10.36	27.00									
20	6875						0.00										
21	6875						0.00										
22	6875						0.00										
23	6875			3.30		78.00	4.47										
24	18500			14.00		330.00	50.92										
25	7500						0.00										
26	8000	3		0.60		0.83	0.06	7.00									
27	7375						0.00										
28	7375						0.00										
29	7375						0.00										
30	7375			1.90		38.20	2.35										
31	5500			3.40		7.50	0.34										
Avg.	9,113	503		49.96		138.14		21.75									
Max.	31,000	1,260		240.00		298.00	73.32	37.00									
Min.	1,000	3		0.30		0.83		7.00									

Table No. 2-3
KMCC-FPD Facility - Columbus, MS
Month/Year - June 1990

FACILITY DISCHARGE MONITORING RECORD
(Page 1 of 1)

Permit Requirement		BOD		O&G		Phenols		TSS		pH (Max)	pH (Min)
Unit of Measurement		XXXXXXX	XXXXXXX	XXXXXXX	XXXXXXX	XXXXXXX	XXXXXXX	XXXXXXX	XXXXXXX	XXXXXXX	XXXXXXX
DATE	FLOW	mg/1	lbs.	mg/1	lbs.	mg/1	lbs.	mg/1	lbs.	SU	SU
1	10000			57.00		153.00	12.76				
2	33667						0.00				
3	33667						0.00				
4	33667			101.00		250.00	70.20				
5	4000						0.00				
6	10000			8.70		6.30	0.53				
7	11250			30.00		96.00	9.01				
8	9250	269		29.00		92.00	7.10	36.00			
9	9833						0.00				
10	9833						0.00				
11	9833			6.40		6.50	0.53				
12	2500						0.00				
13	5000			53.00		163.00	6.80				
14	8300	171		34.00		103.00	7.13	23.00			
15	2500						0.00				
16	3667						0.00				
17	3667						0.00				
18	3667			17.00		43.00	1.32				
19	4000			71.00		410.00	13.68				
20	97000						0.00				
21	51000						0.00				
22	82500	285					0.00	11.00			
23	98830			74.00		105.00	86.55				
24	98830						0.00				
25	98830			53.00		50.00	41.21				
26	54506						0.00				
27	28500	306		37.00		48.00	11.41	12.00			
28	8000			50.00		49.00	3.27				
29	8500						0.00				
30	8500						0.00				
31							0.00				
Avg.	28,110	258		44.36		112.49		20.50			
Max.	98,830	306		101.00		105.00	86.55	36.00			
Min.	2,500	171		6.40		6.30		11.00			

Table No. 2-3
KMCC-FPD Facility - Columbus, MS
Month/Year - May 1990

FACIILITY DISCHARGE MONITORING RECORD
(Page 1 of 1)

Permit Requirement		BOD		O&G		Phenols		TSS		pH (Max)	pH (Min)
Unit of Measurement		XXXXXXX	XXXXXXX	XXXXXXX	XXXXXXX	XXXXXXX	XXXXXXX	XXXXXXX	XXXXXXX	XXXXXXX	XXXXXXX
DATE	FLOW	mg/1	lbs.	mg/1	lbs.	mg/1	lbs.	mg/1	lbs.	SU	SU
1	4000			2.50		505.00	16.85				
2	4000						0.00				
3	6000	900					0.00	38.00			
4	9000			15.00		45.00	3.38				
5	5333						0.00				
6	5333						0.00				
7	5333	720		26.00		325.00	14.46	29.00			
8	7750			49.00		175.00	11.31				
9	6000			3.90		225.00	11.26				
10	8000						0.00				
11	10000						0.00				
12	4750						0.00				
13	4750						0.00				
14	4750			301.00		176.00	6.97				
15	6000						0.00				
16	12500			202.00		220.00	22.94				
17	12250	675					0.00	65.00			
18	8000			175.00		184.00	12.28				
19	5833						0.00				
20	5833						0.00				
21	5833						0.00				
22	6000			92.00		1.76	0.09				
23	7500						0.00				
24	15500	15		44.00		64.00	8.27	4.00			
25	11500			2.10		0.63	0.06				
26	5167						0.00				
27	5167						0.00				
28	5167						0.00				
29	40500			32.00		160.00	54.04				
30	8500			88.00		164.00	11.63				
31	10000	660					0.00	31.00			
Avg.	8,266	594		79.42		172.72		33.40			
Max.	40,500	900		301.00		160.00	54.04	65.00			
Min.	4,000	15		2.10		0.63		4.00			

Table No. 2-3
KMCC-FPD Facility - Columbus, MS
Month/Year - April 1990

FACIILITY DISCHARGE MONITORING RECORD
(Page 1 of 1)

Permit Requirement		BOD		O&G		Phenols		TSS		pH (Max)	pH (Min)
Unit of Measurement		XXXXXXX	XXXXXXX	XXXXXXX	XXXXXXX	XXXXXXX	XXXXXXX	XXXXXXX	XXXXXXX	XXXXXXX	XXXXXXX
DATE	FLOW	mg/1	lbs.	mg/1	lbs.	mg/1	lbs.	mg/1	lbs.	SU	SU
1	4150						0.00				
2	4150			3.50		140.00	4.85				
3	4150	429					0.00	13.00			
4	6200			10.00		300.00	15.51				
5	3500						0.00				
6	4000			2.50		350.00	11.68				
7	4083						0.00				
8	4083						0.00				
9	4083			1.10		310.00	10.56				
10	3250			0.50		370.00	10.03				
11	8000	384					0.00	34.00			
12	4250			81.00		310.00	10.99				
13	5167						0.00				
14	5167						0.00				
15	5167						0.00				
16	4500						0.00				
17	4500						0.00				
18	3700			73.00		395.00	12.19				
19	3400			11.00		340.00	9.64				
20	3567	<1		101.00		360.00	10.71	23.00			
21	3567						0.00				
22	3567						0.00				
23	5500						0.00				
24	3000			3.50		215.00	5.38				
25	3900			4.20		460.00	14.96				
26	3900	1035		4.00		515.00	16.75	36.00			
27	3900						0.00				
28	3900						0.00				
29	3900						0.00				
30	3000			0.80		10.20	0.26				
31							0.00				
Avg.	4,240	412		22.78		313.48		3.53			
Max.	8,000	1035		101.00		515.00	16.75	36.00			
Min.	3,000	<1		0.50		10.20		13.00			

Table No. 2-3
KMCC-FPD Facility - Columbus, MS
Month/Year - March 1990

FACIILITY DISCHARGE MONITORING RECORD
(Page 1 of 1)

Permit Requirement		BOD		O&G		Phenols		TSS		pH (Max)	pH (Min)
Unit of Measurement		XXXXXXX	XXXXXXX	XXXXXXX	XXXXXXX	XXXXXXX	XXXXXXX	XXXXXXX	XXXXXXX	XXXXXXX	XXXXXXX
DATE	FLOW	mg/1	lbs.	mg/1	lbs.	mg/1	lbs.	mg/1	lbs.	SU	SU
1	4375			206.00		86.00	3.14				
2	4375						0.00				
3	4933						0.00				
4	4933						0.00				
5	4933						0.00				
6	4050						0.00				
7	4150			84.00		76.00	2.63				
8	4500			17.00		5.10	0.19				
9	14250						0.00				
10	4583						0.00				
11	4583			78.00		158.00	6.04				
12	4583			53.00		198.00	7.57				
13	10200						0.00				
14	48800			125.00		210.00	85.47				
15	92500	384		63.00		222.00	171.26	19.00			
16	11500						0.00				
17	3333						0.00				
18	3333						0.00				
19	3333						0.00				
20	12500			12.20		122.00	12.72				
21	11250	426		11.60		122.00	11.45	31.00			
22	4250			11.20		116.00	4.11				
23	3950						0.00				
24	1183						0.00				
25	1183						0.00				
26	1183						0.00				
27	7000			26.00		119.00	6.95				
28	13250						0.00				
29	2250	228		22.00		159.00	2.98	29.00			
30	8500			58.00		6.10	0.43				
31							0.00				
Avg.	10,125	346		59.00		123.02		26.33			
Max.	92,500	426		206.00		222.00	171.26	31.00			
Min.	1,183	228		11.20		5.10		19.00			

Table No. 2-3
KMCC-FPD Facility - Columbus, MS
Month/Year - February 1990

FACIILITY DISCHARGE MONITORING RECORD
(Page 1 of 1)

Permit Requirement		BOD		O&G		Phenols		TSS		pH (Max)	pH (Min)
Unit of Measurement		XXXXXXX	XXXXXXX	XXXXXXX	XXXXXXX	XXXXXXX	XXXXXXX	XXXXXXX	XXXXXXX	XXXXXXX	XXXXXXX
DATE	FLOW	mg/1	lbs.	mg/1	lbs.	mg/1	lbs.	mg/1	lbs.	SU	SU
1	11000										
2	11000	6		1.00		16.00	1.47	7.00			
3	6767						0.00				
4	6767						0.00				
5	6767			55.00		29.00	1.64				
6	38900						0.00				
7	21450						0.00				
8	10250	246		5.10		0.31	0.03	58.00			
9	27500			167.00		55.00	12.61				
10	6500						0.00				
11	6500						0.00				
12	6500			9.90		0.77	0.04				
13	4750						0.00				
14	10250			4.70		1.19	0.10				
15	52000	102		24.00		15.00	6.51	23.00			
16	82000						0.00				
17	15222						0.00				
18	15222						0.00				
19	15222			79.00		17.00	2.16				
20	19000						0.00				
21	20250						0.00				
22	53250	222		144.00		17.00	7.55	42.00			
23	22250			133.00		15.00	2.78				
24	6061						0.00				
25	6061						0.00				
26	6061			56.00		59.00	2.98				
27	23950						0.00				
28	32250						0.00				
29							0.00				
30							0.00				
31							0.00				
Avg.	19,418	144		61.70		20.48		32.50			
Max.	82,000	246		167.00		55.00	12.61	58.00			
Min.	4,750	6		1.00		0.31		7.00			

Table No. 2-3
KMCC-FPD Facility - Columbus, MS
Month/Year - September 1990

FACIILITY DISCHARGE MONITORING RECORD
(Page 1 of 1)

Permit Requirement		BOD		O&G		Phenols		TSS		pH (Max)	pH (Min)
Unit of Measurement		XXXXXXX	XXXXXXX	XXXXXXX	XXXXXXX	XXXXXXX	XXXXXXX	XXXXXXX	XXXXXXX	XXXXXXX	XXXXXXX
DATE	FLOW	mg/1	lbs.	mg/1	lbs.	mg/1	lbs.	mg/1	lbs.	SU	SU
1	55020						0.00				
2	55020						0.00				
3	55020						0.00				
4	55020			13.00		245.00	112.42				
5	56500	840		76.00		128.00	60.31	18.00			
6	50500			72.00		115.00	48.43				
7	46600						0.00				
8	46600						0.00				
9	46600						0.00				
10	46600						0.00				
11	46600			27.00		116.00	45.08				
12	53250						0.00				
13	53250	1110		78.00		255.00	113.25	13.00			
14	47200						0.00				
15	47200						0.00				
16	47200						0.00				
17	47200						0.00				
18	47200	690		123.00		1.58	0.62	34.00			
19	63000			51.00		0.28	0.15				
20	70000			96.00		0.27	0.16				
21	43875						0.00				
22	43875						0.00				
23	43875						0.00				
24	43875			10.00		10.00	3.66				
25	41000			44.00		185.00	63.26				
26	71000						0.00				
27	71000	690		186.00		180.00	106.59	25.00			
28	146500						0.00				
29	146500						0.00				
30	141500						0.00				
31							0.00				
Avg.	60,953	833		70.55		112.38		22.50			
Max.	146,500	1110		186.00		255.00	113.25	34.00			
Min.	41,000	690		10.00		0.27		13.00			

Table No. 2-3

KMCC-FPD Facility - Columbus, MS

Month/Year - February 1991

FACILITY DISCHARGE MONITORING RECORD

(Page 1 of 1)

Permit Requirement		BOD		O&G		Phenols		TSS		pH (Max)	pH (Min)
Unit of Measurement		XXXXXXX	XXXXXXX	XXXXXXX	XXXXXXX	XXXXXX	XXXXXXX	XXXXXXX	XXXXXXX	XXXXXXX	XXXXXXX
DATE	FLOW	mg/1	lbs.	mg/1	lbs.	mg/1	lbs.	mg/1	lbs.	SU	SU
1	9200			9.00							7.00
2	9200						0.00				
3	9200						0.00				
4	5500			10.00			0.00				7.10
5	12500						0.00				
6	20000						0.00				
7	9000						0.00				
8	2500			53.00		36.94	0.77				7.00
9	11775						0.00				
10	11775						0.00				
11	1050			20.00			0.00				6.10
12	8400						0.00				
13	7100						0.00				
14	36400						0.00				
15	15000			17.00		53.18	6.65				
16	15000						0.00				
17	15000						0.00				
18	84850						0.00				
19	116000			12.00			0.00				5.80
20	42100						0.00				
21	3750			11.00		36.25	1.13				
22	3750						0.00				
23	15700						0.00				
24	15700						0.00				
25	12150						0.00				
26	8700						0.00				9.60
27	10300			11.00			0.00				
28	8650						0.00				
29							0.00				
30		0					0.00				
31							0.00	0.00			
Avg.	18,580	0		18		42	2.85	0			
Max.	116,000	0		53.00		53.18	6.65	0.00			
Min.	1,050	0		9.00		36.25		0.00			

PERMITTEE NAME/ADDRESS *(Include Facility Name/Location if different)*
NAME KERR-MCGEE (COLUMBUS)
ADDRESS P. O. BOX 906
P. O. BOX 906
COLUMBUS MS 39701
FACILITY
LOCATION
ATTN: G. R. HARROD

NATIONAL POLLUTANT DISCHARGE ELIMINATION SYSTEM *(NPDES)*
DISCHARGE MONITORING REPORT *(DMR)*

(2-16)	(17-19)
MSP090021	001 A
PERMIT NUMBER	DISCHARGE NUMBER

MONITORING PERIOD	YEAR	MO	DAY		YEAR	MO	DAY
FROM	90	12	01	TO	90	12	31
	(20-21)	(22-23)	(24-25)		(26-27)	(28-29)	(30-31)

F - FINAL
PRETREATED PROCESS WW & BOILER
NS
MINOR (SUBR NO) TSE
1990

NOTE: Read instructions before completing this form.

PARAMETER (32-37)		(3 Card Only) (46-53) QUANTITY OR LOADING (54-61) AVERAGE	MAXIMUM	UNITS	(4 Card Only) (38-45) QUALITY OR CONCENTRATION (46-53) MINIMUM	AVERAGE	MAXIMUM	UNITS	NO. EX (62-63)	FREQUENCY OF ANALYSIS (64-68)	SAMPLE TYPE (69-70)
PH	SAMPLE MEASUREMENT	******	******		6.0	*******	*******			3/WK	Grab
00400 1 0 0 EFFLUENT GROSS VALUE	PERMIT REQUIREMENT	******	******	**** ****	5.0 MINIMUM	******	******	SU		TWICE/WEEK	GRAB
OIL & GREASE (FREON EXTR.-IR METH) TOT, RC	SAMPLE MEASUREMENT	******	******		*******	68	157			3/WK	Grab
00560 1 0 0 EFFLUENT GROSS VALUE	PERMIT REQUIREMENT	******	******	**** ****	******	50 DAILY AV	100 DAILY MX	MG/L		TWICE/WEEK	GRAB
PHENOLS	SAMPLE MEASUREMENT	******	98.30 99.41		*******	*******	*******			3/WK	Grab
46000 1 0 0 EFFLUENT GROSS VALUE	PERMIT REQUIREMENT	******	48.8 DAILY MX	LBS/DY	******	******	******	**** ****		WEEKLY	GRAB
FLOW, IN CONDUIT OR THRU TREATMENT PLANT	SAMPLE MEASUREMENT	.055032	.094000		*******	*******	*******			Daily	
50050 1 0 0 EFFLUENT GROSS VALUE	PERMIT REQUIREMENT	REPORT DAILY AV	REPORT DAILY MX	MGD	******	******	******	**** ****		DAILY	CONTIN
	SAMPLE MEASUREMENT										
	PERMIT REQUIREMENT										
	SAMPLE MEASUREMENT										
	PERMIT REQUIREMENT										
	SAMPLE MEASUREMENT										
	PERMIT REQUIREMENT										

NAME/TITLE PRINCIPAL EXECUTIVE OFFICER			TELEPHONE		DATE		
JOHN J. GETZ	I CERTIFY UNDER PENALTY OF LAW THAT I HAVE PERSONALLY EXAMINED AND AM FAMILIAR WITH THE INFORMATION SUBMITTED HEREIN; AND BASED ON MY INQUIRY OF THOSE INDIVIDUALS IMMEDIATELY RESPONSIBLE FOR OBTAINING THE INFORMATION, I BELIEVE THE SUBMITTED INFORMATION IS TRUE, ACCURATE AND COMPLETE. I AM AWARE THAT THERE ARE SIGNIFICANT PENALTIES FOR SUBMITTING FALSE INFORMATION, INCLUDING THE POSSIBILITY OF FINE AND IMPRISONMENT. SEE 18 U.S.C. § 1001 AND 33 U.S.C. § 1319. *(Penalties under these statutes may include fines up to $10,000 and or maximum imprisonment of between 6 months and 5 years.)*	John J. Getz	601	328-7551	91	01	23
TYPED OR PRINTED		SIGNATURE OF PRINCIPAL EXECUTIVE OFFICER OR AUTHORIZED AGENT	AREA CODE	NUMBER	YEAR	MO	DAY

COMMENT AND EXPLANATION OF ANY VIOLATIONS *(Reference all attachments here)*

PERMITTEE NAME/ADDRESS *(Include Facility Name/Location if different)*

NAME KERR-MCGEE (COLUMBUS)

ADDRESS P. O. BOX 906

P. O. BOX 906

COLUMBUS MS 39701

FACILITY

LOCATION

ATTN: G. R. HARROD

NATIONAL POLLUTANT DISCHARGE ELIMINATION SYSTEM *(NPDES)*

DISCHARGE MONITORING REPORT *(DMR)*

(2-16) PERMIT NUMBER	(17-19) DISCHARGE NUMBER
MSP090021	001 A

F - FINAL

PRETREATED PROCESS WW & BOILER

NS

MINOR (SUBR NO) TSE

MONITORING PERIOD	YEAR	MO	DAY		YEAR	MO	DAY
FROM	90	11	01	TO	90	11	30
	(20-21)	(22-23)	(24-25)		(26-27)	(28-29)	(30-31)

NOTE: Read instructions before completing this form.

PARAMETER (32-37)		(3 Card Only) QUANTITY OR LOADING (46-53) AVERAGE	(54-61) MAXIMUM	UNITS	(4 Card Only) QUALITY OR CONCENTRATION (38-45) MINIMUM	(46-53) AVERAGE	(54-61) MAXIMUM	UNITS	NO. EX (62-63)	FREQUENCY OF ANALYSIS (64-68)	SAMPLE TYPE (69-70)
PH	SAMPLE MEASUREMENT	******	******		5.8	*******	*******			3/WK	Grab
00400 1 0 0 EFFLUENT GROSS VALUE	PERMIT REQUIREMENT	******	******	******	5.0 MINIMUM	******	******	SU		TWICE/WEEK	GRAB
OIL & GREASE (FREON EXTR.-IR METH) TOT. RC	SAMPLE MEASUREMENT	******	******		******	24	56			3/WK	Grab
00560 1 0 0 EFFLUENT GROSS VALUE	PERMIT REQUIREMENT	******	******	******	******	50 DAILY AV	100 DAILY MX	MG/L		TWICE/WEEK	GRAB
PHENOLS	SAMPLE MEASUREMENT	******	174.47		******	*******	*******			3/WK	Grab
46000 1 0 0 EFFLUENT GROSS VALUE	PERMIT REQUIREMENT	******	48.8 DAILY MX	LBS/DY	******	******	******	**** ****		WEEKLY	GRAB
FLOW, IN CONDUIT OR THRU TREATMENT PLANT	SAMPLE MEASUREMENT	.0039079	.0077000		******	******	******			Daily	Cont.
50050 1 0 0 EFFLUENT GROSS VALUE	PERMIT REQUIREMENT	REPORT DAILY AV	REPORT DAILY MX	MGD	******	******	******	**** ****		DAILY	CONTIN
	SAMPLE MEASUREMENT										
	PERMIT REQUIREMENT										
	SAMPLE MEASUREMENT										
	PERMIT REQUIREMENT										
	SAMPLE MEASUREMENT										
	PERMIT REQUIREMENT										

NAME/TITLE PRINCIPAL EXECUTIVE OFFICER			TELEPHONE		DATE		
John J. Getz, Plant Mgr.	I CERTIFY UNDER PENALTY OF LAW THAT I HAVE PERSONALLY EXAMINED AND AM FAMILIAR WITH THE INFORMATION SUBMITTED HEREIN; AND BASED ON MY INQUIRY OF THOSE INDIVIDUALS IMMEDIATELY RESPONSIBLE FOR OBTAINING THE INFORMATION, I BELIEVE THE SUBMITTED INFORMATION IS TRUE, ACCURATE AND COMPLETE. I AM AWARE THAT THERE ARE SIGNIFICANT PENALTIES FOR SUBMITTING FALSE INFORMATION, INCLUDING THE POSSIBILITY OF FINE AND IMPRISONMENT. SEE 18 U.S.C. § 1001 AND 33 U.S.C. § 1319. *(Penalties under these statutes may include fines up to $10,000 and or maximum imprisonment of between 6 months and 5 years.)*	John J. Getz	601	328-7551	90	12	11
TYPED OR PRINTED		SIGNATURE OF PRINCIPAL EXECUTIVE OFFICER OR AUTHORIZED AGENT	AREA CODE	NUMBER	YEAR	MO	DAY

COMMENT AND EXPLANATION OF ANY VIOLATIONS *(Reference all attachments here)*

PERMITTEE NAME/ADDRESS *(Include Facility Name/Location if different)*
NAME KERR-MCGEE (COLUMBUS)
ADDRESS P. O. BOX 906
P. O. BOX 906
COLUMBUS MS 39701
FACILITY
LOCATION
ATTN: G. R. HARROD

NATIONAL POLLUTANT DISCHARGE ELIMINATION SYSTEM *(NPDES)*
DISCHARGE MONITORING REPORT *(DMR)*

(2-16)	(17-19)
MSP090021	001 A
PERMIT NUMBER	DISCHARGE NUMBER

MONITORING PERIOD

	YEAR	MO	DAY		YEAR	MO	DAY
FROM	90	10	01	TO	90	10	31
	(20-21)	(22-23)	(24-25)		(26-27)	(28-29)	(30-31)

F - FINAL
PRETREATED PROCESS WW & BOILER
NE
MINOR (SUBR NO) TSE

NOTE: Read instructions before completing this form.

PARAMETER (32-37)		QUANTITY OR LOADING (3 Card Only) (46-53) AVERAGE	QUANTITY OR LOADING (54-61) MAXIMUM	UNITS	QUALITY OR CONCENTRATION (4 Card Only) (38-45) MINIMUM	QUALITY OR CONCENTRATION (46-53) AVERAGE	QUALITY OR CONCENTRATION (54-61) MAXIMUM	UNITS	NO. EX (62-63)	FREQUENCY OF ANALYSIS (64-68)	SAMPLE TYPE (69-70)
PH	SAMPLE MEASUREMENT	******	******		6.0	*******	*******			3/WK	Grab
00400 1 0 0 EFFLUENT GROSS VALUE	PERMIT REQUIREMENT	******	******	**** ****	5.0 MINIMUM	*******	*******	SU		TWICE/ WEEK	GRAB
& GREASE (FREON EXTR.-IR METH) TOT, RC	SAMPLE MEASUREMENT	******	******		*******	38.61	88			3/WK	Grab
00560 1 0 0 EFFLUENT GROSS VALUE	PERMIT REQUIREMENT	******	******	**** ****	******	50 DAILY AV	100 DAILY MX	MG/L		TWICE/ WEEK	GRAB
PHENOLS	SAMPLE MEASUREMENT	******	80.79		******	******	******			3/WK	Grab
46000 1 0 0 EFFLUENT GROSS VALUE	PERMIT REQUIREMENT	******	48.8 DAILY MX	LBS/DY	******	******	******	**** ****		WEEKLY	GRAB
FLOW, IN CONDUIT OR THRU TREATMENT PLANT	SAMPLE MEASUREMENT	.049,259	.077,500		*******	*******	*******			Daily	Cont.
50050 1 0 0 EFFLUENT GROSS VALUE	PERMIT REQUIREMENT	REPORT DAILY AV	REPORT DAILY MX	MGD	******	******	******	**** ****		DAILY	CONTIN
	SAMPLE MEASUREMENT										
	PERMIT REQUIREMENT										
	SAMPLE MEASUREMENT										
	PERMIT REQUIREMENT										
	SAMPLE MEASUREMENT										
	PERMIT REQUIREMENT										

NAME/TITLE PRINCIPAL EXECUTIVE OFFICER		TELEPHONE		DATE		
John J. Getz	I CERTIFY UNDER PENALTY OF LAW THAT I HAVE PERSONALLY EXAMINED AND AM FAMILIAR WITH THE INFORMATION SUBMITTED HEREIN; AND BASED ON MY INQUIRY OF THOSE INDIVIDUALS IMMEDIATELY RESPONSIBLE FOR OBTAINING THE INFORMATION, I BELIEVE THE SUBMITTED INFORMATION IS TRUE, ACCURATE AND COMPLETE. I AM AWARE THAT THERE ARE SIGNIFICANT PENALTIES FOR SUBMITTING FALSE INFORMATION, INCLUDING THE POSSIBILITY OF FINE AND IMPRISONMENT. SEE 18 U.S.C. § 1001 AND 33 U.S.C. § 1319. *(Penalties under these statutes may include fines up to $10,000 and or maximum imprisonment of between 6 months and 5 years.)*	John J. Getz	601	328-7551	90	11	16
TYPED OR PRINTED		SIGNATURE OF PRINCIPAL EXECUTIVE OFFICER OR AUTHORIZED AGENT	AREA CODE	NUMBER	YEAR	MO	DAY

COMMENT AND EXPLANATION OF ANY VIOLATIONS *(Reference all attachments here)*

PERMITTEE NAME/ADDRESS *(Include Facility Name/Location if different)*

NAME SEMMES (COLUMBUS)

ADDRESS P. O. BOX 906

P. O. BOX 906

COLUMBUS MS 39701

FACILITY

LOCATION

ATTN: G. R. HARROD

NATIONAL POLLUTANT DISCHARGE ELIMINATION SYSTEM *(NPDES)*

DISCHARGE MONITORING REPORT *(DMR)*

(2-16) MSP090021 — PERMIT NUMBER

(17-19) 001 A — DISCHARGE NUMBER

F - FINAL

PRETREATED PROCESS WW & BOILER

NS.

MINOR (SUBR NO) TSE

MONITORING PERIOD

	YEAR	MO	DAY		YEAR	MO	DAY
FROM	90	09	01	TO	90	09	30
	(20-21)	(22-23)	(24-25)		(26-27)	(28-29)	(30-31)

NOTE: Read instructions before completing this form.

PARAMETER (32-37)		(3 Card Only) (46-53) QUANTITY OR LOADING (54-61) AVERAGE	MAXIMUM	UNITS	(4 Card Only) (38-45) QUALITY OR CONCENTRATION (46-53) MINIMUM	AVERAGE	(54-61) MAXIMUM	UNITS	NO. EX (62-63)	FREQUENCY OF ANALYSIS (64-68)	SAMPLE TYPE (69-70)
PH	SAMPLE MEASUREMENT	******	******		6.0	******	******			3/WK	Grab
00400 1 0 0 EFFLUENT GROSS VALUE	PERMIT REQUIREMENT	******	******	******	5.0 MINIMUM	******	******	SU		TWICE/WEEK	GRAB
& GREASE (FREON EXTR.-IR METH) TOT,RC	SAMPLE MEASUREMENT	******	******		******	70.55	186			3/WK	Grab
00560 1 0 0 EFFLUENT GROSS VALUE	PERMIT REQUIREMENT	******	******	******	******	50 DAILY AV	100 DAILY MX	MG/L		TWICE/WEEK	GRAB
PHENOLS	SAMPLE MEASUREMENT	******	113.25		******	******	******			3/WK	Grab
46000 1 0 0 EFFLUENT GROSS VALUE	PERMIT REQUIREMENT	******	48.8 DAILY MX	LBS/DY	******	******	******	******		WEEKLY	GRAB
FLOW, IN CONDUIT OR THRU TREATMENT PLANT	SAMPLE MEASUREMENT	.061119	.146500		******	******	******			7/WK	Grab
50050 1 0 0 EFFLUENT GROSS VALUE	PERMIT REQUIREMENT	REPORT DAILY AV	REPORT DAILY MX	MGD	******	******	******	******		DAILY	CONTIN
	SAMPLE MEASUREMENT										
	PERMIT REQUIREMENT										
	SAMPLE MEASUREMENT										
	PERMIT REQUIREMENT										
	SAMPLE MEASUREMENT										
	PERMIT REQUIREMENT										

NAME/TITLE PRINCIPAL EXECUTIVE OFFICER

JOHN J. GETZ

TYPED OR PRINTED

I CERTIFY UNDER PENALTY OF LAW THAT I HAVE PERSONALLY EXAMINED AND AM FAMILIAR WITH THE INFORMATION SUBMITTED HEREIN; AND BASED ON MY INQUIRY OF THOSE INDIVIDUALS IMMEDIATELY RESPONSIBLE FOR OBTAINING THE INFORMATION, I BELIEVE THE SUBMITTED INFORMATION IS TRUE, ACCURATE AND COMPLETE. I AM AWARE THAT THERE ARE SIGNIFICANT PENALTIES FOR SUBMITTING FALSE INFORMATION, INCLUDING THE POSSIBILITY OF FINE AND IMPRISONMENT. SEE 18 U.S.C. § 1001 AND 33 U.S.C. § 1319. *(Penalties under these statutes may include fines up to $10,000 and or maximum imprisonment of between 6 months and 5 years.)*

SIGNATURE OF PRINCIPAL EXECUTIVE OFFICER OR AUTHORIZED AGENT

TELEPHONE: AREA CODE 601 — NUMBER 328-7551

DATE: YEAR 90 — MO 11 — DAY 16

COMMENT AND EXPLANATION OF ANY VIOLATIONS *(Reference all attachments here)*

PERMITTEE NAME/ADDRESS *(Include Facility Name/Location if different)*

NAME KERR-MCGEE (COLUMBUS)

ADDRESS P. O. BOX 906

P. O. BOX 906

COLUMBUS MS 39701

FACILITY

LOCATION

ATTN: G. R. HARROD

NATIONAL POLLUTANT DISCHARGE ELIMINATION SYSTEM *(NPDES)*

DISCHARGE MONITORING REPORT *(DMR)*

(2-16) MSP090021 — PERMIT NUMBER

(17-19) 001 A — DISCHARGE NUMBER

F - FINAL

PRETREATED PROCESS WW & BOILER

NS

MINOR (SUBR NO) TSE

MONITORING PERIOD

	YEAR	MO	DAY		YEAR	MO	DAY
FROM	90	08	01	TO	90	08	31
	(20-21)	(22-23)	(24-25)		(26-27)	(28-29)	(30-31)

NOTE: Read instructions before completing this form.

PARAMETER (32-37)		(3 Card Only) QUANTITY OR LOADING (46-53) AVERAGE	(54-61) MAXIMUM	UNITS	(4 Card Only) QUALITY OR CONCENTRATION (38-45) MINIMUM	(46-53) AVERAGE	(54-61) MAXIMUM	UNITS	NO. EX (62-63)	FREQUENCY OF ANALYSIS (64-68)	SAMPLE TYPE (69-70)
PH	SAMPLE MEASUREMENT	*******	*******		6.2	*******	*******			3/WK	GRAB
00400 1 0 0 EFFLUENT GROSS VALUE	PERMIT REQUIREMENT	******	******	******	5.0 MINIMUM	******	******	SU		TWICE/WEEK	GRAB
OIL & GREASE (FREON EXTR.-IR METH) TOT. RC	SAMPLE MEASUREMENT	*******	*******		*******	12.88	46			3/WK	GRAB
00560 1 0 0 EFFLUENT GROSS VALUE	PERMIT REQUIREMENT	******	******	******	******	50 DAILY AV	100 DAILY MX	MG/L		TWICE/WEEK	GRAB
PHENOLS	SAMPLE MEASUREMENT	******	2047		*******	*******	*******			3/WK	GRAB
46000 1 0 0 EFFLUENT GROSS VALUE	PERMIT REQUIREMENT	******	48.6 DAILY MX	LBS/DY	*******	******	******	******		WEEKLY	GRAB
FLOW, IN CONDUIT OR THRU TREATMENT PLANT	SAMPLE MEASUREMENT	010023	.020000		*******	*******	*******			7/WK	
50050 1 0 0 EFFLUENT GROSS VALUE	PERMIT REQUIREMENT	REPORT DAILY AV	REPORT DAILY MX	MGD	******	******	******	******		DAILY	CONTIN
	SAMPLE MEASUREMENT										
	PERMIT REQUIREMENT										
	SAMPLE MEASUREMENT										
	PERMIT REQUIREMENT										
	SAMPLE MEASUREMENT										
	PERMIT REQUIREMENT										

NAME/TITLE PRINCIPAL EXECUTIVE OFFICER

John J. Getz

TYPED OR PRINTED

I CERTIFY UNDER PENALTY OF LAW THAT I HAVE PERSONALLY EXAMINED AND AM FAMILIAR WITH THE INFORMATION SUBMITTED HEREIN; AND BASED ON MY INQUIRY OF THOSE INDIVIDUALS IMMEDIATELY RESPONSIBLE FOR OBTAINING THE INFORMATION, I BELIEVE THE SUBMITTED INFORMATION IS TRUE, ACCURATE AND COMPLETE. I AM AWARE THAT THERE ARE SIGNIFICANT PENALTIES FOR SUBMITTING FALSE INFORMATION, INCLUDING THE POSSIBILITY OF FINE AND IMPRISONMENT. SEE 18 U.S.C. § 1001 AND 33 U.S.C. § 1319. *(Penalties under these statutes may include fines up to $10,000 and or maximum imprisonment of between 6 months and 5 years.)*

John J. Getz

SIGNATURE OF PRINCIPAL EXECUTIVE OFFICER OR AUTHORIZED AGENT

TELEPHONE: AREA CODE 601 — NUMBER 3287551

DATE: YEAR 90 — MO 11 — DAY 16

COMMENT AND EXPLANATION OF ANY VIOLATIONS *(Reference all attachments here)*

PERMITTEE NAME/ADDRESS *(Include Facility Name/Location if different)*

NAME

ADDRESS KERR-MCGEE (COLUMBUS)

P. O. BOX 906

P.O. BOX 906 MS 39701

FACILITY

LOCATION

ATTN: G. R. HARROD

NATIONAL POLLUTANT DISCHARGE ELIMINATION SYSTEM *(NPDES)*

DISCHARGE MONITORING REPORT *(DMR)*

(2-16) PERMIT NUMBER: MS [illegible]

(17-19) DISCHARGE NUMBER:

F - FINAL

PRETREATED PROCESS WW & BOILER

NS

MINOR (SUBR NO) TSE

MONITORING PERIOD	YEAR	MO	DAY		YEAR	MO	DAY
FROM	90	07	01	TO	90	07	31
(20-21) (22-23) (24-25) (26-27) (28-29) (30-31)							

NOTE: Read instructions before completing this form.

PARAMETER (32-37)		(3 Card Only) QUANTITY OR LOADING (46-53) AVERAGE	(54-61) MAXIMUM	UNITS	(4 Card Only) QUALITY OR CONCENTRATION (38-45) MINIMUM	(46-53) AVERAGE	(54-61) MAXIMUM	UNITS	NO. EX (62-63)	FREQUENCY OF ANALYSIS (64-68)	SAMPLE TYPE (69-70)
PH	SAMPLE MEASUREMENT	******	******		6.3 ✓	******	******			3/WK	Grab
00400 1 0 0 EFFLUENT GROSS VALUE	PERMIT REQUIREMENT	******	******	******	5.0 MINIMUM ✓	******	******	SU		TWICE/WEEK	GRAB
OIL & GREASE (FREON EXTR.-IR METH) TOT,RC	SAMPLE MEASUREMENT	******	******		******	49.96 ✓	240			3/WK	Grab
00560 1 0 0 EFFLUENT GROSS VALUE	PERMIT REQUIREMENT	******	******	******	******	50 DAILY AV	100 DAILY MX	MG/L		TWICE/WEEK	GRAB
PHENOLS	SAMPLE MEASUREMENT	******	73.32		******	******	******			3/WK	Grab
46000 1 0 0 EFFLUENT GROSS VALUE	PERMIT REQUIREMENT	******	48.8 DAILY MX	LBS/DY	******	******	******	******		WEEKLY	GRAB
FLOW, IN CONDUIT OR THRU TREATMENT PLANT	SAMPLE MEASUREMENT	009113	031000		******	******	******			7/WK	~~Grab~~
50050 1 0 0 EFFLUENT GROSS VALUE	PERMIT REQUIREMENT	REPORT DAILY AV	REPORT DAILY MX	MGD	******	******	******	******		DAILY	CONTIN
	SAMPLE MEASUREMENT										
	PERMIT REQUIREMENT										
	SAMPLE MEASUREMENT										
	PERMIT REQUIREMENT										
	SAMPLE MEASUREMENT										
	PERMIT REQUIREMENT										

NAME/TITLE PRINCIPAL EXECUTIVE OFFICER			TELEPHONE		DATE		
John J. Getz	I CERTIFY UNDER PENALTY OF LAW THAT I HAVE PERSONALLY EXAMINED AND AM FAMILIAR WITH THE INFORMATION SUBMITTED HEREIN; AND BASED ON MY INQUIRY OF THOSE INDIVIDUALS IMMEDIATELY RESPONSIBLE FOR OBTAINING THE INFORMATION, I BELIEVE THE SUBMITTED INFORMATION IS TRUE, ACCURATE AND COMPLETE. I AM AWARE THAT THERE ARE SIGNIFICANT PENALTIES FOR SUBMITTING FALSE INFORMATION, INCLUDING THE POSSIBILITY OF FINE AND IMPRISONMENT. SEE 18 U.S.C. § 1001 AND 33 U.S.C. § 1319. *(Penalties under these statutes may include fines up to $10,000 and or maximum imprisonment of between 6 months and 5 years.)*	SIGNATURE OF PRINCIPAL EXECUTIVE OFFICER OR AUTHORIZED AGENT	601	328-7551	90	11	16
TYPED OR PRINTED			AREA CODE	NUMBER	YEAR	MO	DAY

COMMENT AND EXPLANATION OF ANY VIOLATIONS *(Reference all attachments here)*

Facility Name/Location if different)
NAME Kerr-McGee (Columbus)
ADDRESS P.O. Box 906
Columbus, MS. 39701
FACILITY
LOCATION
ATTN: John Getz

NATIONAL POLLUTANT DISCHARGE ELIMINATION SYSTEM (NPDES)
DISCHARGE MONITORING REPORT (DMR)
(2-16) (17-19)

MS0090021 — PERMIT NUMBER
001A — DISCHARGE NUMBER

F- Final
Pretreated Process WW + Boiler
NS
Minor (Subr No) TSE

MONITORING PERIOD

	YEAR	MO	DAY		YEAR	MO	DAY
FROM	90	06	01	TO	90	06	30
	(20-21)	(22-23)	(24-25)		(26-27)	(28-29)	(30-31)

NOTE: Read instructions before completing this form.

PARAMETER (32-37)		(3 Card Only) QUANTITY OR LOADING (46-53) AVERAGE	(54-61) MAXIMUM	UNITS	(4 Card Only) QUALITY OR CONCENTRATION (38-45) MINIMUM	(46-53) AVERAGE	(54-61) MAXIMUM	UNITS	NO. EX (62-63)	FREQUENCY OF ANALYSIS (64-68)	SAMPLE TYPE (69-70)
PH 00400 1 00 Effluent Gross Value	SAMPLE MEASUREMENT				6.4					3/wk	Grab
	PERMIT REQUIREMENT				5.0 minimum			SU		Twice/week	Grab
Oil + Grease (Freon Extr.-IR meth) Tot, RC 00560 1 00 Effluent Gross Value	SAMPLE MEASUREMENT					4436	101 mg/L			3/wk	Grab
	PERMIT REQUIREMENT					50 Daily Av	100 Daily Mx mg/L			Twice/week	Grab
Phenols 46000 1 00 Effluent Gross Value	SAMPLE MEASUREMENT		8655							3/wk	Grab
	PERMIT REQUIREMENT		48.6 Daily Mx Lbs/Dy							Weekly	Grab
Flows IN Conduit or thru Treatment plant 50050 1 00 Effluent Gross Value	SAMPLE MEASUREMENT	.028110	.098830							Daily	Cont.
	PERMIT REQUIREMENT	Report Daily Av	Report Daily Mx MGD							Daily	Cont
	SAMPLE MEASUREMENT										
	PERMIT REQUIREMENT										
	SAMPLE MEASUREMENT										
	PERMIT REQUIREMENT										
	SAMPLE MEASUREMENT										
	PERMIT REQUIREMENT										

NAME/TITLE PRINCIPAL EXECUTIVE OFFICER
John J. Getz
TYPED OR PRINTED

I CERTIFY UNDER PENALTY OF LAW THAT I HAVE PERSONALLY EXAMINED AND AM FAMILIAR WITH THE INFORMATION SUBMITTED HEREIN AND BASED ON MY INQUIRY OF THOSE INDIVIDUALS IMMEDIATELY RESPONSIBLE FOR OBTAINING THE INFORMATION, I BELIEVE THE SUBMITTED INFORMATION IS TRUE, ACCURATE AND COMPLETE. I AM AWARE THAT THERE ARE SIGNIFICANT PENALTIES FOR SUBMITTING FALSE INFORMATION, INCLUDING THE POSSIBILITY OF FINE AND IMPRISONMENT SEE 18 U.S.C § 1001 AND 33 U.S.C § 1319. (Penalties under these statutes may include fines up to $10,000 and or maximum imprisonment of between 6 months and 5 years.)

John J. Getz
SIGNATURE OF PRINCIPAL EXECUTIVE OFFICER OR AUTHORIZED AGENT

TELEPHONE: AREA CODE 601 — NUMBER 328-7551

DATE: YEAR 90 — MO 06 — DAY 15

COMMENT AND EXPLANATION OF ANY VIOLATIONS (Reference all attachments here)

Corrected 11/16/90

EPA Form 3320-1 (Rev. 9-88) Previous editions may be used.

(REPLACES EPA FORM T-40 WHICH MAY NOT BE USED)

PERMITTEE NAME/ADDRESS *(Include Facility Name/Location if different)*

NAME

ADDRESS KERR-MCGEE (COLUMBUS)
P. O. BOX 906
P. O. BOX 906

FACILITY COLUMBUS MS 39701

LOCATION

NATIONAL POLLUTANT DISCHARGE ELIMINATION SYSTEM *(NPDES)*
DISCHARGE MONITORING REPORT *(DMR)*

(2-16) PERMIT NUMBER: MS

(17-19) DISCHARGE NUMBER:

F - FINAL
PRETREATED PROCESS WW & BOILER

NS

MONITORING PERIOD

	YEAR	MO	DAY		YEAR	MO	DAY
FROM	90	06	01	TO	90	06	30
	(20-21)	(22-23)	(24-25)		(26-27)	(28-29)	(30-31)

NOTE: Read instructions before completing this form.

ATTN: G. R. HARROD

PARAMETER (32-37)		(3 Card Only) QUANTITY OR LOADING (46-53) AVERAGE	(54-61) MAXIMUM	UNITS	(4 Card Only) QUALITY OR CONCENTRATION (38-45) MINIMUM	(46-53) AVERAGE	(54-61) MAXIMUM	UNITS	NO. EX (62-63)	FREQUENCY OF ANALYSIS (64-68)	SAMPLE TYPE (69-70)
PH 00400 1 0 0	SAMPLE MEASUREMENT	******	******		6.0	******	******		0	3/WK	GRAB
	PERMIT REQUIREMENT	******	******	****	5.0	******	******			TWICE/WEEK	GRAB
EFFLUENT GROSS VALUE OIL & GREASE (FREON EXTR.-IR METH) TOT,RC 00560 1 0 0	SAMPLE MEASUREMENT	******	******	****	MINIMUM ******	39.46	74	SU	0	3/WK	GRAB
	PERMIT REQUIREMENT	******	******	****	******	50	100			TWICE/WEEK	GRAB
EFFLUENT GROSS VALUE PHENOLS 46000 1 0 0	SAMPLE MEASUREMENT	******	35	****	******	DAILY AV ******	DAILY MX ******	MG/L	0	3/WK	GRAB
	PERMIT REQUIREMENT	******	48.8		******	******	******	****		WEEKLY	GRAB
EFFLUENT GROSS VALUE FLOW, IN CONDUIT OR THRU TREATMENT PLANT 50050 1 0 0	SAMPLE MEASUREMENT	1029.166 MGD	DAILY MX 1098.83 MGD	LBS/DY	******	******	******	****	0	CONT	CONT
	PERMIT REQUIREMENT	REPORT	REPORT		******	******	******	****		DAILY	CONTIN
EFFLUENT GROSS VALUE	SAMPLE MEASUREMENT	DAILY AV	DAILY MX	MGD				****			
	PERMIT REQUIREMENT										
	SAMPLE MEASUREMENT										
	PERMIT REQUIREMENT										
	SAMPLE MEASUREMENT										
	PERMIT REQUIREMENT										

NAME/TITLE PRINCIPAL EXECUTIVE OFFICER

JOHN J. GETZ

TYPED OR PRINTED

I CERTIFY UNDER PENALTY OF LAW THAT I HAVE PERSONALLY EXAMINED AND AM FAMILIAR WITH THE INFORMATION SUBMITTED HEREIN; AND BASED ON MY INQUIRY OF THOSE INDIVIDUALS IMMEDIATELY RESPONSIBLE FOR OBTAINING THE INFORMATION, I BELIEVE THE SUBMITTED INFORMATION IS TRUE, ACCURATE AND COMPLETE. I AM AWARE THAT THERE ARE SIGNIFICANT PENALTIES FOR SUBMITTING FALSE INFORMATION, INCLUDING THE POSSIBILITY OF FINE AND IMPRISONMENT. SEE 18 U.S.C. § 1001 AND 33 U.S.C. § 1319. *(Penalties under these statutes may include fines up to $10,000 and or maximum imprisonment of between 6 months and 5 years.)*

John J. Getz

SIGNATURE OF PRINCIPAL EXECUTIVE OFFICER OR AUTHORIZED AGENT

TELEPHONE: AREA CODE 601 NUMBER 328-7551

DATE: YEAR 90 MO 7 DAY 19

COMMENT AND EXPLANATION OF ANY VIOLATIONS *(Reference all attachments here)*

...ious editions may be used. (REPLACES EPA FORM T-40 WHICH MAY NOT BE USED.)

PAGE OF

Facility Name/Location if different) (Include

NAME Kerr-McGee (Columbus)

ADDRESS P.O. Box 906
Columbus, Ms. 39701

FACILITY

LOCATION

ATTN: John Getz

NATIONAL POLLUTANT DISCHARGE ELIMINATION SYSTEM (NPDES)

DISCHARGE MONITORING REPORT (DMR)

(2-16) MS P0090021 PERMIT NUMBER

(17-19) 001A DISCHARGE NUMBER

F- Final
Pretreated Process WW + Boiler

NS Minor (Subr No) TSE

MONITORING PERIOD

	YEAR	MO	DAY		YEAR	MO	DAY
FROM	90	05	01	TO	90	05	31
	(20-21)	(22-23)	(24-25)		(26-27)	(28-29)	(30-31)

NOTE: Read instructions before completing this form.

PARAMETER (32-37)		(3 Card Only) QUANTITY OR LOADING (46-53) AVERAGE	(54-61) MAXIMUM	UNITS	(4 Card Only) QUALITY OR CONCENTRATION (38-45) MINIMUM	(46-53) AVERAGE	(54-61) MAXIMUM	UNITS	NO. EX (62-63)	FREQUENCY OF ANALYSIS (64-68)	SAMPLE TYPE (69-70)
PH 00400 1 00 Effluent Gross Value	SAMPLE MEASUREMENT				6.2					3/wk	Grab
	PERMIT REQUIREMENT				5.0 Minimum			SU		Twice/week	Grab
Oil + Grease (Freon xtr.-IR meth) Tot, RC 00560 1 00 Effluent Gross Value	SAMPLE MEASUREMENT					79.42	301.			3/wk	Grab
	PERMIT REQUIREMENT					50 Daily AV	100 Daily MX MG/L			Twice/week	Grab
Phenols 46000 1 0 a Effluent Gross Value	SAMPLE MEASUREMENT		54.04							3/wk	Grab
	PERMIT REQUIREMENT		48.8 Daily MX	LBS/DY						Weekly	Grab
Flows IN Conduit or thru Treatment plant 50050 1 0 0 Effluent Gross Value	SAMPLE MEASUREMENT	.008267	.040500							Daily	Cont.
	PERMIT REQUIREMENT	Report Daily AV	Report Daily MX	MGD						Daily	Cont.
	SAMPLE MEASUREMENT										
	PERMIT REQUIREMENT										
	SAMPLE MEASUREMENT										
	PERMIT REQUIREMENT										
	SAMPLE MEASUREMENT										
	PERMIT REQUIREMENT										

NAME/TITLE PRINCIPAL EXECUTIVE OFFICER

John J. Getz

TYPED OR PRINTED

I CERTIFY UNDER PENALTY OF LAW THAT I HAVE PERSONALLY EXAMINED AND AM FAMILIAR WITH THE INFORMATION SUBMITTED HEREIN; AND BASED ON MY INQUIRY OF THOSE INDIVIDUALS IMMEDIATELY RESPONSIBLE FOR OBTAINING THE INFORMATION, I BELIEVE THE SUBMITTED INFORMATION IS TRUE, ACCURATE AND COMPLETE. I AM AWARE THAT THERE ARE SIGNIFICANT PENALTIES FOR SUBMITTING FALSE INFORMATION, INCLUDING THE POSSIBILITY OF FINE AND IMPRISONMENT. SEE 18 U.S.C. § 1001 AND 33 U.S.C. § 1319. (Penalties under these statutes may include fines up to $10,000 and/or maximum imprisonment of between 6 months and 5 years.)

John J. Getz

SIGNATURE OF PRINCIPAL EXECUTIVE OFFICER OR AUTHORIZED AGENT

TELEPHONE: AREA CODE 601 NUMBER 328-7551

DATE: YEAR 90 MO 05 DAY 15

COMMENT AND EXPLANATION OF ANY VIOLATIONS (Reference all attachments here)

Corrected 11/16/90

EPA Form 3320-1 (Rev. 9-88) Previous editions may be used. (REPLACES EPA FORM T-40 WHICH MAY NOT BE USED.)

PERMITTEE NAME/ADDRESS *(Include Facility Name/Location if different)*

NAME

ADDRESS KERR-MCGEE (COLUMBUS)
P. O. BOX 906
P. O. BOX 906
COLUMBUS

FACILITY NS 0071

LOCATION

ATTN: G. R. HARROD

NATIONAL POLLUTANT DISCHARGE ELIMINATION SYSTEM *(NPDES)*
DISCHARGE MONITORING REPORT *(DMR)*

(2-16) PERMIT NUMBER: NS 0000071

(17-19) DISCHARGE NUMBER: 001 A

F - FINAL
PRETREATED PROCESS WW & BOILER

NS

MINOR (SUBR NO) TSE

MONITORING PERIOD

	YEAR (20-21)	MO (22-23)	DAY (24-25)		YEAR (26-27)	MO (28-29)	DAY (30-31)
FROM	90	05	01	TO	90	05	31

NOTE: Read instructions before completing this form.

PARAMETER (32-37)		(3 Card Only) QUANTITY OR LOADING (46-53) AVERAGE	(54-61) MAXIMUM	UNITS	(4 Card Only) QUALITY OR CONCENTRATION (38-45) MINIMUM	(46-53) AVERAGE	(54-61) MAXIMUM	UNITS	NO. EX (62-63)	FREQUENCY OF ANALYSIS (64-68)	SAMPLE TYPE (69-70)
PH	SAMPLE MEASUREMENT	*******	*******		6.0	*******	*******		0	3/WK	Grab
00400 1 0 0	PERMIT REQUIREMENT	*******	*******	****	5.0 MINIMUM	*******	*******	SU		TWICE/WEEK	GRAB
EFFLUENT GROSS VALUE OIL & GREASE (FREON EXTR.-IR METH) TOT. RC	SAMPLE MEASUREMENT	*******	*******		*******	35.5	92		0	3/WK	Grab
00560 1 0 0	PERMIT REQUIREMENT	*******	*******	****	*******	50	100			TWICE/WEEK	GRAB
EFFLUENT GROSS VALUE PHENOLS	SAMPLE MEASUREMENT	*******	33.94	****	*******	DAILY AV *******	DAILY MX *******	MG/L	0	3/WK	Grab
34000 1 0 0	PERMIT REQUIREMENT	*******	48.8		*******	*******	*******	****		WEEKLY	GRAB
EFFLUENT GROSS VALUE FLOW, IN CONDUIT OR THRU TREATMENT PLANT	SAMPLE MEASUREMENT	.008541 gal	.040 5 MGD	LBS/DY	*******	*******	*******	****	0	Cont	Cont
50050 1 0 0	PERMIT REQUIREMENT	REPORT	REPORT		*******	*******	*******	****		DAILY	CONTIN
EFFLUENT GROSS VALUE	SAMPLE MEASUREMENT	DAILY AV	DAILY MX	MGD				****			
	PERMIT REQUIREMENT										
	SAMPLE MEASUREMENT										
	PERMIT REQUIREMENT										
	SAMPLE MEASUREMENT										
	PERMIT REQUIREMENT										

NAME/TITLE PRINCIPAL EXECUTIVE OFFICER

John J. Getz

TYPED OR PRINTED

I CERTIFY UNDER PENALTY OF LAW THAT I HAVE PERSONALLY EXAMINED AND AM FAMILIAR WITH THE INFORMATION SUBMITTED HEREIN; AND BASED ON MY INQUIRY OF THOSE INDIVIDUALS IMMEDIATELY RESPONSIBLE FOR OBTAINING THE INFORMATION, I BELIEVE THE SUBMITTED INFORMATION IS TRUE, ACCURATE AND COMPLETE. I AM AWARE THAT THERE ARE SIGNIFICANT PENALTIES FOR SUBMITTING FALSE INFORMATION, INCLUDING THE POSSIBILITY OF FINE AND IMPRISONMENT. SEE 18 U.S.C. § 1001 AND 33 U.S.C. § 1319. *(Penalties under these statutes may include fines up to $10,000 and or maximum imprisonment of between 6 months and 5 years.)*

John J. Getz

SIGNATURE OF PRINCIPAL EXECUTIVE OFFICER OR AUTHORIZED AGENT

TELEPHONE: AREA CODE 601 | NUMBER 328-7551

DATE: YEAR 90 | MO 07 | DAY 19

COMMENT AND EXPLANATION OF ANY VIOLATIONS *(Reference all attachments here)*

Facility (Name/Location if different)

NAME Kerr-McGee (Columbus)

ADDRESS P.O. Box 906
Columbus, Ms. 39701

FACILITY

LOCATION

ATTN: John Getz

NATIONAL POLLUTANT DISCHARGE ELIMINATION SYSTEM (NPDES)
DISCHARGE MONITORING REPORT (DMR)

(2-16) MS P0090021 — PERMIT NUMBER

(17-19) 001A — DISCHARGE NUMBER

F- Final
Pretreated Process WW + Boiler

N.S. Minor (Subr No) TSE

MONITORING PERIOD

	YEAR	MO	DAY		YEAR	MO	DAY
FROM	90	04	01	TO	90	04	30
	(20-21)	(22-23)	(24-25)		(26-27)	(28-29)	(30-31)

NOTE: Read instructions before completing this form.

PARAMETER (32-37)		(3 Card Only) QUANTITY OR LOADING (46-53) AVERAGE	(54-61) MAXIMUM	UNITS	(4 Card Only) QUALITY OR CONCENTRATION (38-45) MINIMUM	(46-53) AVERAGE	(54-61) MAXIMUM	UNITS	NO. EX (62-63)	FREQUENCY OF ANALYSIS (64-68)	SAMPLE TYPE (69-70)
PH 00400 1 00 Effluent Gross Value	SAMPLE MEASUREMENT				6.3					3/wk	Grab
	PERMIT REQUIREMENT				5.0 Minimum			SU		Twice/week	Grab
Oil + Grease (Freon extr.-IR meth) Tot, RC 00560 1 0 0 Effluent Gross Value	SAMPLE MEASUREMENT					22.78	40			3/wk	Grab
	PERMIT REQUIREMENT					50 Daily Av	100 Daily Mx	mg/L		Twice/week	Grab
Phenols 46000 1 0 0 Effluent Gross Value	SAMPLE MEASUREMENT		16.75							3/wk	Grab
	PERMIT REQUIREMENT		48.8 Daily Mx	lbs/DY						Weekly	Grab
Flows IN Conduit or thru Treatment plant 50050 1 0 0 Effluent Gross Value	SAMPLE MEASUREMENT	.007240	.008000							Daily	Cont.
	PERMIT REQUIREMENT	Report Daily Av	Report Daily Mx	MGD						Daily	Cont
	SAMPLE MEASUREMENT										
	PERMIT REQUIREMENT										
	SAMPLE MEASUREMENT										
	PERMIT REQUIREMENT										
	SAMPLE MEASUREMENT										
	PERMIT REQUIREMENT										

NAME/TITLE PRINCIPAL EXECUTIVE OFFICER

JOHN J. GETZ

TYPED OR PRINTED

I CERTIFY UNDER PENALTY OF LAW THAT I HAVE PERSONALLY EXAMINED AND AM FAMILIAR WITH THE INFORMATION SUBMITTED HEREIN; AND BASED ON MY INQUIRY OF THOSE INDIVIDUALS IMMEDIATELY RESPONSIBLE FOR OBTAINING THE INFORMATION, I BELIEVE THE SUBMITTED INFORMATION IS TRUE, ACCURATE AND COMPLETE. I AM AWARE THAT THERE ARE SIGNIFICANT PENALTIES FOR SUBMITTING FALSE INFORMATION, INCLUDING THE POSSIBILITY OF FINE AND IMPRISONMENT. SEE 18 U.S.C. § 1001 AND 33 U.S.C. § 1319. *(Penalties under these statutes may include fines up to $10,000 and/or maximum imprisonment of between 6 months and 5 years.)*

John J. Getz

SIGNATURE OF PRINCIPAL EXECUTIVE OFFICER OR AUTHORIZED AGENT

TELEPHONE		DATE		
AREA CODE	NUMBER	YEAR	MO	DAY
601	328-7551	90	04	15

COMMENT AND EXPLANATION OF ANY VIOLATIONS *(Reference all attachments here)*

Corrected 11/16/90

EPA Form 3320-1 (Rev. 9-88) *Previous editions may be used.* (REPLACES EPA FORM T-40 WHICH MAY NOT BE USED.)

PERMITTEE NAME/ADDRESS *(Include Facility Name/Location if different)*

NAME ~~KERR-MCGEE (COLUMBUS)~~

ADDRESS ~~P. O. BOX 986~~

~~P. O. BOX 986~~

~~COLUMBUS~~ ~~MS 39701~~

FACILITY

LOCATION

ATTN: G. R. HARROD

NATIONAL POLLUTANT DISCHARGE ELIMINATION SYSTEM *(NPDES)*

DISCHARGE MONITORING REPORT *(DMR)*

(2-16) PERMIT NUMBER: MS0 0990 21

(17-19) DISCHARGE NUMBER: 001 A

F - FINAL

PRETREATED PROCESS WW & BOILER

N.S.

MINOR (SUBR NO) TSE

MONITORING PERIOD

	YEAR (20-21)	MO (22-23)	DAY (24-25)		YEAR (26-27)	MO (28-29)	DAY (30-31)
FROM	90	04	01	TO	90	04	30

NOTE: Read instructions before completing this form.

PARAMETER (32-37)		(3 Card Only) (46-53) QUANTITY OR LOADING (54-61) AVERAGE	MAXIMUM	UNITS	(4 Card Only) (38-45) QUALITY OR CONCENTRATION (46-53) MINIMUM	AVERAGE	MAXIMUM	UNITS	NO. EX (62-63)	FREQUENCY OF ANALYSIS (64-68)	SAMPLE TYPE (69-70)
PH	SAMPLE MEASUREMENT	******	******		6.0	******	******		0	3/WK	Grab
00400 1 0 0 EFFLUENT GROSS VALUE	PERMIT REQUIREMENT	******	******	***** *****	5.0 MINIMUM	******	******	SU		TWICE/WEEK	GRAB
OIL & GREASE (FREON EXTR.-IR METH) TOT,RC	SAMPLE MEASUREMENT	******	******		******	5.83	100		0	3/WK	Grab
00560 1 0 0 EFFLUENT GROSS VALUE	PERMIT REQUIREMENT	******	******	***** *****	******	50 DAILY AV	100 DAILY MX	MG/L		TWICE/WEEK	GRAB
PHENOLS	SAMPLE MEASUREMENT	******	16.87		******	******	******		0	3/WK	Grab
46000 1 0 0 EFFLUENT GROSS VALUE	PERMIT REQUIREMENT	******	48.8 DAILY MX	LBS/DY	******	******	******	***** *****		WEEKLY	GRAB
FLOW, IN CONDUIT OR THRU TREATMENT PLANT	SAMPLE MEASUREMENT				******	******	******		0	Cont	Cont
50050 1 0 0 EFFLUENT GROSS VALUE	PERMIT REQUIREMENT	REPORT DAILY AV	REPORT DAILY MX	MGD	******	******	******	***** *****		DAILY	CONTIN
	SAMPLE MEASUREMENT	4239 gal .00	8 MGD								
	PERMIT REQUIREMENT										
	SAMPLE MEASUREMENT										
	PERMIT REQUIREMENT										
	SAMPLE MEASUREMENT										
	PERMIT REQUIREMENT										

NAME/TITLE PRINCIPAL EXECUTIVE OFFICER			TELEPHONE		DATE		
John J. Getz	I CERTIFY UNDER PENALTY OF LAW THAT I HAVE PERSONALLY EXAMINED AND AM FAMILIAR WITH THE INFORMATION SUBMITTED HEREIN; AND BASED ON MY INQUIRY OF THOSE INDIVIDUALS IMMEDIATELY RESPONSIBLE FOR OBTAINING THE INFORMATION, I BELIEVE THE SUBMITTED INFORMATION IS TRUE, ACCURATE AND COMPLETE. I AM AWARE THAT THERE ARE SIGNIFICANT PENALTIES FOR SUBMITTING FALSE INFORMATION, INCLUDING THE POSSIBILITY OF FINE AND IMPRISONMENT. SEE 18 U.S.C. § 1001 AND 33 U.S.C. § 1319. *(Penalties under these statutes may include fines up to $10,000 and or maximum imprisonment of between 6 months and 5 years.)*	John J. Getz	601	328-7551	90	07	19
TYPED OR PRINTED		SIGNATURE OF PRINCIPAL EXECUTIVE OFFICER OR AUTHORIZED AGENT	AREA CODE	NUMBER	YEAR	MO	DAY

COMMENT AND EXPLANATION OF ANY VIOLATIONS *(Reference all attachments here)*

Facility Name/Location if different)

NAME Kerr-McGee (Columbus)

ADDRESS P.O. Box 906
Columbus, Ms. 39701

FACILITY

LOCATION

ATTN: John Getz

NATIONAL POLLUTANT DISCHARGE ELIMINATION SYSTEM (NPDES)

DISCHARGE MONITORING REPORT (DMR)

(2-16) PERMIT NUMBER: MSP090021

(17-19) DISCHARGE NUMBER: 001A

F- Final
Pretreated Process WW + Boiler

NS
Minor (Subr No) TSE

MONITORING PERIOD

	YEAR	MO	DAY		YEAR	MO	DAY
FROM	90	03	01	TO	90	03	31
	(20-21)	(22-23)	(24-25)		(26-27)	(28-29)	(30-31)

NOTE: Read instructions before completing this form.

PARAMETER (32-37)		(3 Card Only) QUANTITY OR LOADING (46-53) AVERAGE	(54-61) MAXIMUM	UNITS	(4 Card Only) QUALITY OR CONCENTRATION (38-45) MINIMUM	(46-53) AVERAGE	(54-61) MAXIMUM	UNITS	NO. EX (62-63)	FREQUENCY OF ANALYSIS (64-68)	SAMPLE TYPE (69-70
PH 00400 1 00 Effluent Gross Value	SAMPLE MEASUREMENT				6.0					3/wk	Grab
	PERMIT REQUIREMENT				5.0 Minimum			SU		Twice/Week	Grab
Oil + Grease (Freon extr.-IR Meth) Tot, RC 00560 1 00 Effluent Gross Value	SAMPLE MEASUREMENT					5.09	20			3/wk	Grab
	PERMIT REQUIREMENT					50 Daily Av	100 Daily Mx	mg/L		Twice/Week	Grab
Phenols 46000 1 00 Effluent Gross Value	SAMPLE MEASUREMENT		171.26							3/wk	Grab
	PERMIT REQUIREMENT		438 Daily Mx	lbs/DY						Weekly	Grab
Flows in Conduit or thru Treatment plant 50050 1 00 Effluent Gross Value	SAMPLE MEASUREMENT	.01125	.095500							Daily	Cont.
	PERMIT REQUIREMENT	Report Daily Av	Report Daily Mx	MGD						Daily	Cont.
	SAMPLE MEASUREMENT										
	PERMIT REQUIREMENT										
	SAMPLE MEASUREMENT										
	PERMIT REQUIREMENT										
	SAMPLE MEASUREMENT										
	PERMIT REQUIREMENT										

NAME/TITLE PRINCIPAL EXECUTIVE OFFICER

John J. Getz

TYPED OR PRINTED

I CERTIFY UNDER PENALTY OF LAW THAT I HAVE PERSONALLY EXAMINED AND AM FAMILIAR WITH THE INFORMATION SUBMITTED HEREIN; AND BASED ON MY INQUIRY OF THOSE INDIVIDUALS IMMEDIATELY RESPONSIBLE FOR OBTAINING THE INFORMATION, I BELIEVE THE SUBMITTED INFORMATION IS TRUE, ACCURATE AND COMPLETE. I AM AWARE THAT THERE ARE SIGNIFICANT PENALTIES FOR SUBMITTING FALSE INFORMATION, INCLUDING THE POSSIBILITY OF FINE AND IMPRISONMENT. SEE 18 U.S.C. § 1001 AND 33 U.S.C. § 1319. (Penalties under these statutes may include fines up to $10,000 and/or maximum imprisonment of between 6 months and 5 years.)

John J. Getz

SIGNATURE OF PRINCIPAL EXECUTIVE OFFICER OR AUTHORIZED AGENT

TELEPHONE: AREA CODE 601 NUMBER 328-7551

DATE: YEAR 90 MO 03 DAY 15

COMMENT AND EXPLANATION OF ANY VIOLATIONS (Reference all attachments here)

Corrected 11/16/90

PERMITTEE NAME/ADDRESS *(Include Facility Name/Location if different)*

NAME KERR-MCGEE (COLUMBUS)

ADDRESS P. O. BOX 906
P. O. BOX 906
COLUMBUS MS 58701

FACILITY

LOCATION

ATTN: G. R. HARROD

NATIONAL POLLUTANT DISCHARGE ELIMINATION SYSTEM *(NPDES)*
DISCHARGE MONITORING REPORT *(DMR)*

(2-16) PERMIT NUMBER	(17-19) DISCHARGE NUMBER
MS0000031	001 A

F - FINAL
PRETREATED PROCESS WW & BOILER

NS

MINOR (SUBR NO) TSE

MONITORING PERIOD

FROM YEAR (20-21)	MO (22-23)	DAY (24-25)	TO YEAR (26-27)	MO (28-29)	DAY (30-31)
90	03	01	90	03	31

NOTE: Read instructions before completing this form.

PARAMETER (32-37)		(3 Card Only) QUANTITY OR LOADING (46-53) AVERAGE	(54-61) MAXIMUM	UNITS	(4 Card Only) QUALITY OR CONCENTRATION (38-45) MINIMUM	(46-53) AVERAGE	(54-61) MAXIMUM	UNITS	NO. EX (62-63)	FREQUENCY OF ANALYSIS (64-68)	SAMPLE TYPE (69-70)
PH	SAMPLE MEASUREMENT	******	******		6.3 ✓	******	******		0	7/7	Grab
00400 1 0 0	PERMIT REQUIREMENT	******	******	**** ****	5.0 MINIMUM	******	******	SU		TWICE/WEEK	GRAB
EFFLUENT GROSS VALUE	SAMPLE MEASUREMENT	******	******		******	59	206		2	3/7	Grab
& GREASE (FREON EXTR.-IR METH)TOT,RO	PERMIT REQUIREMENT	******	******	**** ****	******	50 DAILY AV	100 DAILY MX	MG/L		TWICE/WEEK	GRAB
00560 1 0 0	SAMPLE MEASUREMENT	******	21		******	******	******		0	3/7	Grab
EFFLUENT GROSS VALUE	PERMIT REQUIREMENT	******	48.8 DAILY MX	LBS/DY	******	******	******	**** ****		WEEKLY	GRAB
PHENOLS	SAMPLE MEASUREMENT	10181 gal	.092.5 MGD		******	******	******		0	Cont,	Cont,
46000 1 0 0	PERMIT REQUIREMENT	REPORT DAILY AV	REPORT DAILY MX	MGD	******	******	******	**** ****		DAILY	CONTIN
EFFLUENT GROSS VALUE	SAMPLE MEASUREMENT										
FLOW, IN CONDUIT OR THRU TREATMENT PLANT	PERMIT REQUIREMENT										
50050 1 0 0	SAMPLE MEASUREMENT										
EFFLUENT GROSS VALUE	PERMIT REQUIREMENT										
	SAMPLE MEASUREMENT										
	PERMIT REQUIREMENT										

NAME/TITLE PRINCIPAL EXECUTIVE OFFICER

John J. Getz

TYPED OR PRINTED

I CERTIFY UNDER PENALTY OF LAW THAT I HAVE PERSONALLY EXAMINED AND AM FAMILIAR WITH THE INFORMATION SUBMITTED HEREIN; AND BASED ON MY INQUIRY OF THOSE INDIVIDUALS IMMEDIATELY RESPONSIBLE FOR OBTAINING THE INFORMATION. I BELIEVE THE SUBMITTED INFORMATION IS TRUE, ACCURATE AND COMPLETE. I AM AWARE THAT THERE ARE SIGNIFICANT PENALTIES FOR SUBMITTING FALSE INFORMATION, INCLUDING THE POSSIBILITY OF FINE AND IMPRISONMENT. SEE 18 U.S.C. § 1001 AND 33 U.S.C. § 1319. *(Penalties under these statutes may include fines up to $10,000 and or maximum imprisonment of between 6 months and 5 years.)*

John J. Getz

SIGNATURE OF PRINCIPAL EXECUTIVE OFFICER OR AUTHORIZED AGENT

TELEPHONE AREA CODE	NUMBER	DATE YEAR	MO	DAY
601	328-7551	90	07	19

COMMENT AND EXPLANATION OF ANY VIOLATIONS *(Reference all attachments here)*

EPA Form 3320-1 (Rev. 9-88) *Previous editions may be used.* (REPLACES EPA FORM T-40 WHICH MAY NOT BE USED.)

00003/900131-1319

PERMITTEE NAME/ADDRESS (Include Facility Name/Location if different)

NAME Kerr-McGee (Columbus)

ADDRESS P.O. Box 906
Columbus, Ms. 38701

FACILITY

LOCATION

ATTN: John Getz

NATIONAL POLLUTANT DISCHARGE ELIMINATION SYSTEM (NPDES)

DISCHARGE MONITORING REPORT (DMR)

(2-16)	(17-19)
MSP090021	001A
PERMIT NUMBER	DISCHARGE NUMBER

F- Final
Pretreated Process WW + Boiler

NS Minor (Subr No) TSE

MONITORING PERIOD						
FROM	YEAR	MO	DAY	TO	YEAR	MO	DAY
	90	02	01		90	02	28
	(20-21)	(22-23)	(24-25)		(26-27)	(28-29)	(30-31)

NOTE: Read instructions before completing this form.

PARAMETER (32-37)		(3 Card Only) QUANTITY OR LOADING (46-53) AVERAGE	(54-61) MAXIMUM	UNITS	(4 Card Only) QUALITY OR CONCENTRATION (38-45) MINIMUM	(46-53) AVERAGE	(54-61) MAXIMUM	UNITS	NO. EX (62-63)	FREQUENCY OF ANALYSIS (64-68)	SAMPLE TYPE (69-70)
PH 00400 1 00 EFFluent Gross Value	SAMPLE MEASUREMENT	—	—	—	6.3	—	—			3/wk	Grab
	PERMIT REQUIREMENT	—	—	—	5.0 Minimum	—	—	SU		Twice/Week	Grab
Oil + Grease (Freon Extr.-IR meth) Tot, RC 00560 1 00 EFFluent Gross Value	SAMPLE MEASUREMENT	—	—	—	—	61.70	167			3/wk	Grab
	PERMIT REQUIREMENT	—	—	—	—	50 Daily AV	100 Daily MX MG/L			Twice/Week	Grab
Phenols 46000 1 00 EFFluent Gross Value	SAMPLE MEASUREMENT	—	12.61		—	—	—			3/wk	Grab
	PERMIT REQUIREMENT	—	48.8 Daily MX Lbs/Dy		—	—	—	—		Weekly	Grab
Flow, IN Conduit or thru Treatment plant 50050 1 00 Effluent Gross Value	SAMPLE MEASUREMENT	.019418	.082000		—	—	—	—		Daily	Cont
	PERMIT REQUIREMENT	Report Daily AV	Report Daily MX MGD		—	—	—	—		Daily	Cont
	SAMPLE MEASUREMENT										
	PERMIT REQUIREMENT										
	SAMPLE MEASUREMENT										
	PERMIT REQUIREMENT										
	SAMPLE MEASUREMENT										
	PERMIT REQUIREMENT										

NAME/TITLE PRINCIPAL EXECUTIVE OFFICER

John J. Getz

TYPED OR PRINTED

I CERTIFY UNDER PENALTY OF LAW THAT I HAVE PERSONALLY EXAMINED AND AM FAMILIAR WITH THE INFORMATION SUBMITTED HEREIN; AND BASED ON MY INQUIRY OF THOSE INDIVIDUALS IMMEDIATELY RESPONSIBLE FOR OBTAINING THE INFORMATION, I BELIEVE THE SUBMITTED INFORMATION IS TRUE, ACCURATE AND COMPLETE. I AM AWARE THAT THERE ARE SIGNIFICANT PENALTIES FOR SUBMITTING FALSE INFORMATION, INCLUDING THE POSSIBILITY OF FINE AND IMPRISONMENT. SEE 18 U.S.C. § 1001 AND 33 U.S.C. § 1319. (Penalties under these statutes may include fines up to $10,000 and or maximum imprisonment of between 6 months and 5 years.)

John J. Getz

SIGNATURE OF PRINCIPAL EXECUTIVE OFFICER OR AUTHORIZED AGENT

TELEPHONE		DATE		
601	328-7551	90	02	15
AREA CODE	NUMBER	YEAR	MO	DAY

COMMENT AND EXPLANATION OF ANY VIOLATIONS (Reference all attachments here)

Corrected 11/16/90

EPA Form 3320-1 (Rev. 9-88) Previous editions may be used. (REPLACES EPA FORM T-40 WHICH MAY NOT BE USED.)

PERMITTEE NAME/ADDRESS *(Include Facility Name/Location if different)*

NAME KERR-MCGEE (COLUMBUS)

ADDRESS P. O. BOX 906

P. O. BOX 906

COLUMBUS MS 39701

FACILITY

LOCATION

ATTN: G. R. HARROD

NATIONAL POLLUTANT DISCHARGE ELIMINATION SYSTEM *(NPDES)*

DISCHARGE MONITORING REPORT *(DMR)*

(2-16) PERMIT NUMBER	(17-19) DISCHARGE NUMBER
MSP090021	001 A

F - FINAL

PRETREATED PROCESS WW & BOILER

TSE

MINOR (SUBR NO) TSE

MONITORING PERIOD	YEAR	MO	DAY		YEAR	MO	DAY
FROM	90	02	01	TO	90	02	28
	(20-21)	(22-23)	(24-25)		(26-27)	(28-29)	(30-31)

NOTE: Read instructions before completing this form.

PARAMETER (32-37)		QUANTITY OR LOADING (3 Card Only) (46-53) AVERAGE	QUANTITY OR LOADING (54-61) MAXIMUM	UNITS	QUALITY OR CONCENTRATION (4 Card Only) (38-45) MINIMUM	QUALITY OR CONCENTRATION (46-53) AVERAGE	QUALITY OR CONCENTRATION (54-61) MAXIMUM	UNITS	NO. EX (62-63)	FREQUENCY OF ANALYSIS (64-68)	SAMPLE TYPE (69-70)
PH	SAMPLE MEASUREMENT	******	******		6.25	******	******				
00400 1 0 0	PERMIT REQUIREMENT	******	******	**** ****	5.0 MINIMUM	******	******	SU		TWICE/WEEK	GRAB
EFFLUENT GROSS VALUE	SAMPLE MEASUREMENT	******	******		******	4.67	16.7				
OIL & GREASE (FREON EXTR.-IR METH) TOT. RC	PERMIT REQUIREMENT	******	******	**** ****	******	50 DAILY AV	100 DAILY MX	MG/L		TWICE/WEEK	GRAB
00560 1 0 0	SAMPLE MEASUREMENT	******	17.04		******	******	******				
EFFLUENT GROSS VALUE	PERMIT REQUIREMENT	******	48.8 DAILY MX	**** LBS/DY	******	******	******	**** ****		WEEKLY	GRAB
PHENOLS	SAMPLE MEASUREMENT										
46000 1 0 0	PERMIT REQUIREMENT										
EFFLUENT GROSS VALUE	SAMPLE MEASUREMENT										
FLOW, IN CONDUIT OR THRU TREATMENT PLANT	PERMIT REQUIREMENT										
50050 1 0 0	SAMPLE MEASUREMENT	23,589	82,000		******	******	******				
EFFLUENT GROSS VALUE	PERMIT REQUIREMENT	REPORT DAILY AV	REPORT DAILY MX	MGD	******	******	******	**** ****		DAILY	CONTIN
	SAMPLE MEASUREMENT										
	PERMIT REQUIREMENT										
	SAMPLE MEASUREMENT										
	PERMIT REQUIREMENT										
	SAMPLE MEASUREMENT										
	PERMIT REQUIREMENT										

NAME/TITLE PRINCIPAL EXECUTIVE OFFICER

John J. Getz

TYPED OR PRINTED

I CERTIFY UNDER PENALTY OF LAW THAT I HAVE PERSONALLY EXAMINED AND AM FAMILIAR WITH THE INFORMATION SUBMITTED HEREIN; AND BASED ON MY INQUIRY OF THOSE INDIVIDUALS IMMEDIATELY RESPONSIBLE FOR OBTAINING THE INFORMATION, I BELIEVE THE SUBMITTED INFORMATION IS TRUE, ACCURATE AND COMPLETE. I AM AWARE THAT THERE ARE SIGNIFICANT PENALTIES FOR SUBMITTING FALSE INFORMATION, INCLUDING THE POSSIBILITY OF FINE AND IMPRISONMENT. SEE 18 U.S.C. § 1001 AND 33 U.S.C. § 1319. *(Penalties under these statutes may include fines up to $10,000 and or maximum imprisonment of between 6 months and 5 years.)*

John J. Getz - Manager

SIGNATURE OF PRINCIPAL EXECUTIVE OFFICER OR AUTHORIZED AGENT

TELEPHONE		DATE		
AREA CODE	NUMBER	YEAR	MO	DAY
601	328-7551	90	04	02

COMMENT AND EXPLANATION OF ANY VIOLATIONS *(Reference all attachments here)*

SEE ATTACHED EXPLANATION (TSE)

(Facility Name/Location if different)

NAME [illegible] (COLUMBUS)

ADDRESS P. O. BOX 205

P. O. BOX 205

COLUMBUS MS 39701

FACILITY

LOCATION

ATTN: G. R. HARROD

DISCHARGE MONITORING REPORT (DMR)

(2-16) PERMIT NUMBER: MS0000051

(17-19) DISCHARGE NUMBER: 001 A

F - FINAL

PRETREATED PROCESS WW & BOILER

MONITORING PERIOD

	YEAR	MO	DAY		YEAR	MO	DAY
FROM	90	01	01	TO	90	01	31
	(20-21)	(22-23)	(24-25)		(26-27)	(28-29)	(30-31)

MINOR (SUBR NO) TSE

NOTE: Read instructions before completing this form.

PARAMETER (32-37)		(3 Card Only) (46-53) QUANTITY OR LOADING (54-61) AVERAGE	MAXIMUM	UNITS	(4 Card Only) (38-45) QUALITY OR CONCENTRATION (46-53) MINIMUM	AVERAGE	(54-61) MAXIMUM	UNITS	NO. EX (62-63)	FREQUENCY OF ANALYSIS (64-68)	SAMPLE TYPE (69-70)
PH	SAMPLE MEASUREMENT	******	******		5.8	******	******		0	3/WK	Grab
00400 1 0 0 EFFLUENT GROSS VALUE	PERMIT REQUIREMENT	******	******	**** ****	5.0 MINIMUM	******	******	SU		TWICE/WEEK	GRAB
OIL & GREASE (FREON EXT.-IR METH) TOT, RG	SAMPLE MEASUREMENT	******	******		******	22 4.67	48 79		0	3/WK	Grab
00560 1 0 0 EFFLUENT GROSS VALUE	PERMIT REQUIREMENT	******	******	**** ****	******	50 DAILY AV	100 DAILY MX	MG/L		TWICE/WEEK	GRAB
PHENOLS	SAMPLE MEASUREMENT	******	114.2 40.28		******	******	******		0	3/WK	Grab
46000 1 0 0 EFFLUENT GROSS VALUE	PERMIT REQUIREMENT	******	48.8 DAILY MX	LBS/DY	******	******	******	**** ****		WEEKLY	GRAB
FLOW, IN CONDUIT OR THRU TREATMENT PLANT	SAMPLE MEASUREMENT	28.717 MGD	.082 MGD		******	******	******		0	Daily	Cont
50050 1 0 0 EFFLUENT GROSS VALUE	PERMIT REQUIREMENT	REPORT DAILY AV	REPORT DAILY MX	MGD	******	******	******	**** ****		DAILY	CONTIN
	SAMPLE MEASUREMENT										
	PERMIT REQUIREMENT										
	SAMPLE MEASUREMENT										
	PERMIT REQUIREMENT										
	SAMPLE MEASUREMENT										
	PERMIT REQUIREMENT										

NAME/TITLE PRINCIPAL EXECUTIVE OFFICER

John J. Getz

TYPED OR PRINTED

I CERTIFY UNDER PENALTY OF LAW THAT I HAVE PERSONALLY EXAMINED AND AM FAMILIAR WITH THE INFORMATION SUBMITTED HEREIN; AND BASED ON MY INQUIRY OF THOSE INDIVIDUALS IMMEDIATELY RESPONSIBLE FOR OBTAINING THE INFORMATION, I BELIEVE THE SUBMITTED INFORMATION IS TRUE, ACCURATE AND COMPLETE. I AM AWARE THAT THERE ARE SIGNIFICANT PENALTIES FOR SUBMITTING FALSE INFORMATION, INCLUDING THE POSSIBILITY OF FINE AND IMPRISONMENT. SEE 18 U.S.C. § 1001 AND 33 U.S.C. § 1319. *(Penalties under these statutes may include fines up to $10,000 and or maximum imprisonment of between 6 months and 5 years.)*

SIGNATURE OF PRINCIPAL EXECUTIVE OFFICER OR AUTHORIZED AGENT

TELEPHONE: AREA CODE 601 | NUMBER 328-7551

DATE: YEAR 90 | MO 01 | DAY 15

COMMENT AND EXPLANATION OF ANY VIOLATIONS *(Reference all attachments here)*

Facility Name/Location if different)
NAME Kerr-McGee (Columbus)
ADDRESS P.O. Box 906
Columbus, MS. 39701
FACILITY
LOCATION
ATTN: John Getz

NATIONAL POLLUTANT DISCHARGE ELIMINATION SYSTEM (NPDES)
DISCHARGE MONITORING REPORT (DMR)
(2-16) (17-19)

MS P0900 21 — PERMIT NUMBER
001A — DISCHARGE NUMBER

F- Final
Pretreated Process WW + Boiler

NS, minor (Subr No) TSE

MONITORING PERIOD

	YEAR	MO	DAY		YEAR	MO	DAY
FROM	90	01	01	TO	90	01	31
	(20-21)	(22-23)	(24-25)		(26-27)	(28-29)	(30-31)

NOTE: Read instructions before completing this form.

PARAMETER (32-37)		(3 Card Only) QUANTITY OR LOADING (46-53) AVERAGE	(54-61) MAXIMUM	UNITS	(4 Card Only) QUALITY OR CONCENTRATION (38-45) MINIMUM	(46-53) AVERAGE	(54-61) MAXIMUM	UNITS	NO. EX (62-63)	FREQUENCY OF ANALYSIS (64-68)	SAMPLE TYPE (69-70)
PH 00400 1 00 Effluent Gross Value	SAMPLE MEASUREMENT				6.0					3/wk	Grab
	PERMIT REQUIREMENT				5.0 Minimum			SU		Twice/week	Grab
Oil + Grease (Freon xtr.-IR meth) Tot, RC 00560 1 00 Effluent Gross Value	SAMPLE MEASUREMENT					23.34	48 mg/L			3/wk	Grab
	PERMIT REQUIREMENT					50 Daily Av	100 Daily Mx mg/L			Twice/week	Grab
Phenols 46000 1 00 Effluent Gross Value	SAMPLE MEASUREMENT		136.24							3/wk	Grab
	PERMIT REQUIREMENT		438 Daily Mx Lbs/Dy							Weekly	Grab
Flow, In Conduit or thru Treatment plant 50050 1 00 Effluent Gross Value	SAMPLE MEASUREMENT	.016348	.029600							Daily	Cont.
	PERMIT REQUIREMENT	Report Daily Av	Report Daily Mx MGD							Daily	Cont.
	SAMPLE MEASUREMENT										
	PERMIT REQUIREMENT										
	SAMPLE MEASUREMENT										
	PERMIT REQUIREMENT										
	SAMPLE MEASUREMENT										
	PERMIT REQUIREMENT										

NAME/TITLE PRINCIPAL EXECUTIVE OFFICER

John J. Getz
TYPED OR PRINTED

I CERTIFY UNDER PENALTY OF LAW THAT I HAVE PERSONALLY EXAMINED AND AM FAMILIAR WITH THE INFORMATION SUBMITTED HEREIN; AND BASED ON MY INQUIRY OF THOSE INDIVIDUALS IMMEDIATELY RESPONSIBLE FOR OBTAINING THE INFORMATION, I BELIEVE THE SUBMITTED INFORMATION IS TRUE, ACCURATE AND COMPLETE. I AM AWARE THAT THERE ARE SIGNIFICANT PENALTIES FOR SUBMITTING FALSE INFORMATION, INCLUDING THE POSSIBILITY OF FINE AND IMPRISONMENT. SEE 18 U.S.C. § 1001 AND 33 U.S.C. § 1319. (Penalties under these statutes may include fines up to $10,000 and/or maximum imprisonment of between 6 months and 5 years.)

John J. Getz
SIGNATURE OF PRINCIPAL EXECUTIVE OFFICER OR AUTHORIZED AGENT

TELEPHONE: AREA CODE 601 | NUMBER 328-7551

DATE: YEAR 90 | MO 01 | DAY 15

COMMENT AND EXPLANATION OF ANY VIOLATIONS (Reference all attachments here)

Corrected 11/16/90

EPA Form 3320-1 (Rev. 9-88) Previous editions may be used.

(REPLACES EPA FORM T-40 WHICH MAY NOT BE USED)

Table No. 2-3
KMCC-FPD Facility - Columbus, MS
Month/Year - January 1990

FACIILITY DISCHARGE MONITORING RECORD
(Page 1 of 1)

Permit Requirement		BOD		O&G		Phenols		TSS		pH (Max)	pH (Min)
Unit of Measurement		XXXXXXX	XXXXXXX	XXXXXXX	XXXXXXX	XXXXXXX	XXXXXXX	XXXXXXX	XXXXXXX	XXXXXXX	XXXXXXX
DATE	FLOW	mg/1	lbs.	mg/1	lbs.	mg/1	lbs.	mg/1	lbs.	SU	SU
1	27500										
2	27500			31.00		158.00	36.24				
3	27500						0.00				
4	29600	480		35.00		107.00	26.41	32.00			
5	22100			48.00		144.00	26.54				
6	22100						0.00				
7	22100						0.00				
8	22100			35.00		117.00	21.56				
9	14900						0.00				
10	17300			6.50		0.80	0.12				
11	13550						0.00				
12	13450	465		4.60		145.00	16.27	43.00			
13	7750						0.00				
14	7750						0.00				
15	7750						0.00				
16	5650			15.00		1.30	0.06				
17	4900			20.00		1.70	0.07				
18	14950						0.00				
19	7050			19.00		166.00	9.76				
20	12283						0.00				
21	12283						0.00				
22	12283	645		25.00		166.00	17.01	34.00			
23	13100						0.00				
24	14900	510		65.00		88.00	10.94	57.00			
25	21500			1.70		41.00	7.35				
26	18550						0.00				
27	18550						0.00				
28	18550						0.00				
29	18550			3.00		91.00	14.08				
30	14800						0.00				
31	15950			18.00		74.00	9.84				
Avg.	16,348	525		23.34		92.91		41.50			
Max.	29,600	645		48.00		158.00	36.24	57.00			
Min.	4,900	465		1.70		0.08		32.00			

PERMITTEE NAME/ADDRESS (*Include Facility Name/Location if different*)

NAME KERR-McGEE

ADDRESS P.O. Box 906

COLUMBUS MS

1680

FACILITY

LOCATION

NATIONAL POLLUTANT DISCHARGE ELIMINATION SYSTEM (*NPDES*)

DISCHARGE MONITORING REPORT (*DMR*)

Form Approved
OMB No. 2040-0004
Approval expires 12-31-87

(2-16) PERMIT NUMBER	(17-19) DISCHARGE NUMBER
90021	001

MONITORING PERIOD	YEAR	MO	DAY		YEAR	MO	DAY
FROM	88 (20-21)	05 (22-23)	01 (24-25)	TO	88 (26-27)	06 (28-29)	01 (30-31)

NOTE: Read instructions before completing this form.

PARAMETER (32-37)		(3 Card Only) QUANTITY OR LOADING (46-53) AVERAGE	(54-61) MAXIMUM	UNITS	(4 Card Only) QUALITY OR CONCENTRATION (38-45) MINIMUM	(46-53) AVERAGE	(54-61) MAXIMUM	UNITS	NO. EX (62-63)	FREQUENCY OF ANALYSIS (64-68)	SAMPLE TYPE (69-70)
PH, EFFLUENT 000400	SAMPLE MEASUREMENT	----	----	---	5.31	5.74	6.52	SU		3/7	GRAB
	PERMIT REQUIREMENT	----	----	---	5.0	---	---			3/7	GRAB
[redacted]L-GREASE 000550	SAMPLE MEASUREMENT	7.0	14.2	LBS/ DAY	(0.1	25.4	41	MG/ L		3/7	GRAB
	PERMIT REQUIREMENT	----	----		----	50	100			3/7	GRAB
ARSENIC, TOTAL 001002	SAMPLE MEASUREMENT	N/A	N/A	LBS/ DAY	N/A	N/A	N/A	MG/ L		1/365	24 hr.
	PERMIT REQUIREMENT	----	.13		----	----	4			1/365	24 hr.
CHROMIUM, TOTAL 001034	SAMPLE MEASUREMENT	N/A	N/A	LBS/ DAY	----	----	4	MG/ L		1/365	24 hr.
	PERMIT REQUIREMENT		.13		----	----	4			1/365	24.hr
COPPER, TOTAL 001042	SAMPLE MEASUREMENT	N/A	N/A	LBS/ DAY	N/A	N/A	N/A	MG/ L		1/365	24 hr.
	PERMIT REQUIREMENT	----	.17		----	----	5			1/365	24 hr.
[redacted]ENOLS 032730	SAMPLE MEASUREMENT	25.1	44.0	LBS/ DAY	7.5	94.1	137	MG/ L		3/7	GRAB
	PERMIT REQUIREMENT	---	48.8		----	----	----			1/7	GRAB
FLOW RATE 074060	SAMPLE MEASUREMENT	.0327	.0533	MG/ DAY	----	----	----			1/1	INST
	PERMIT REQUIREMENT	----	----		----	----	----			1/1	INST

NAME/TITLE PRINCIPAL EXECUTIVE OFFICER

A. L. Martin
Vice President/Genl.Mgr

TYPED OR PRINTED

I CERTIFY UNDER PENALTY OF LAW THAT I HAVE PERSONALLY EXAMINED AND AM FAMILIAR WITH THE INFORMATION SUBMITTED HEREIN AND BASED ON MY INQUIRY OF THOSE INDIVIDUALS IMMEDIATELY RESPONSIBLE FOR OBTAINING THE INFORMATION, I BELIEVE THE SUBMITTED INFORMATION IS TRUE, ACCURATE AND COMPLETE. I AM AWARE THAT THERE ARE SIGNIFICANT PENALTIES FOR SUBMITTING FALSE INFORMATION, INCLUDING THE POSSIBILITY OF FINE AND IMPRISONMENT. SEE 18 U.S.C. § 1001 AND 33 U.S.C. § 1319. (*Penalties under these statutes may include fines up to $10,000 and or maximum imprisonment of between 6 months and 5 years.*)

E L Crakmore

SIGNATURE OF PRINCIPAL EXECUTIVE OFFICER OR AUTHORIZED AGENT

TELEPHONE		DATE		
601	328-7551	88	07	26
AREA CODE	NUMBER	YEAR	MO	DAY

COMMENT AND EXPLANATION OF ANY VIOLATIONS (*Reference all attachments here*)

PERMITTEE NAME/ADDRESS *(Include Facility Name/Location if different)*

NAME KERR-MCGEE (COLUMBUS)

ADDRESS P. O. BOX 906

P. O. BOX 906

COLUMBUS MS 39701

FACILITY

LOCATION

ATTN: G. R. HARROD

NATIONAL POLLUTANT DISCHARGE ELIMINATION SYSTEM *(NPDES)*
DISCHARGE MONITORING REPORT *(DMR)*

(2-16) PERMIT NUMBER	(17-19) DISCHARGE NUMBER
MSP090021	001 A

F - FINAL
PRETREATED PROCESS WW & BOILER

1989

MINOR (SUBR NO) TSE

NOTE: Read instructions before completing this form.

MONITORING PERIOD	YEAR	MO	DAY		YEAR	MO	DAY
FROM	89	12	01	TO	89	12	31
	(20-21)	(22-23)	(24-25)		(26-27)	(28-29)	(30-31)

PARAMETER (32-37)		(3 Card Only) QUANTITY OR LOADING (46-53) AVERAGE	(54-61) MAXIMUM	UNITS	(4 Card Only) QUALITY OR CONCENTRATION (38-45) MINIMUM	(46-53) AVERAGE	(54-61) MAXIMUM	UNITS	NO. EX (62-63)	FREQUENCY OF ANALYSIS (64-68)	SAMPLE TYPE (69-70)
PH	SAMPLE MEASUREMENT	******	******		5.2	******	******		0	3/7	grab
00400 1 0 0 EFFLUENT GROSS VALUE	PERMIT REQUIREMENT	******	******	**** ****	5.0 MINIMUM	******	******	SU		TWICE/WEEK	GRAB
OIL & GREASE (FREON EXTR.-IR METH) TOT, RC	SAMPLE MEASUREMENT	******	******		******	26.24	68		0	3/7	grab
00560 1 0 0 EFFLUENT GROSS VALUE	PERMIT REQUIREMENT	******	******	**** ****	******	50 DAILY AV	100 DAILY MX	MG/L		TWICE/WEEK	GRAB
PHENOLS	SAMPLE MEASUREMENT	******	33.2		******	******	******		0	3/7	grab
46000 1 0 0 EFFLUENT GROSS VALUE	PERMIT REQUIREMENT	******	48.8 DAILY MX	LBS/DY	******	******	******	**** ****		WEEKLY	GRAB
FLOW, IN CONDUIT OR THRU TREATMENT PLANT	SAMPLE MEASUREMENT	37,025	118,000		******	******	******		0	1/1	INST
50050 1 0 0 EFFLUENT GROSS VALUE	PERMIT REQUIREMENT	REPORT DAILY AV	REPORT DAILY MX	MGD	******	******	******	**** ****		DAILY	CONTIN
	SAMPLE MEASUREMENT										
	PERMIT REQUIREMENT										
	SAMPLE MEASUREMENT										
	PERMIT REQUIREMENT										
	SAMPLE MEASUREMENT										
	PERMIT REQUIREMENT										

NAME/TITLE PRINCIPAL EXECUTIVE OFFICER			TELEPHONE		DATE		
JOHN J. GETZ	I CERTIFY UNDER PENALTY OF LAW THAT I HAVE PERSONALLY EXAMINED AND AM FAMILIAR WITH THE INFORMATION SUBMITTED HEREIN; AND BASED ON MY INQUIRY OF THOSE INDIVIDUALS IMMEDIATELY RESPONSIBLE FOR OBTAINING THE INFORMATION, I BELIEVE THE SUBMITTED INFORMATION IS TRUE, ACCURATE AND COMPLETE. I AM AWARE THAT THERE ARE SIGNIFICANT PENALTIES FOR SUBMITTING FALSE INFORMATION, INCLUDING THE POSSIBILITY OF FINE AND IMPRISONMENT. SEE 18 U.S.C. § 1001 AND 33 U.S.C. § 1319. *(Penalties under these statutes may include fines up to $10,000 and or maximum imprisonment of between 6 months and 5 years.)*	John J Getz - Mgr.	AREA CODE 601	NUMBER 328-7551	YEAR 89	MO 12	DAY 29
TYPED OR PRINTED		SIGNATURE OF PRINCIPAL EXECUTIVE OFFICER OR AUTHORIZED AGENT					

COMMENT AND EXPLANATION OF ANY VIOLATIONS *(Reference all attachments here)*

PERMITTEE NAME/ADDRESS *(Include Facility Name/Location if different)*
NAME KERR-MCGEE (COLUMBUS)
ADDRESS P. O. BOX 906
P. O. BOX 906
COLUMBUS MS 38701
FACILITY
LOCATION
ATTN: G. R. HARROD John J. Getz Plant Mgr.

NATIONAL POLLUTANT DISCHARGE ELIMINATION SYSTEM *(NPDES)*
DISCHARGE MONITORING REPORT *(DMR)*

PERMIT NUMBER (2-16)	DISCHARGE NUMBER (17-19)
MSP090021	001 A

F - FINAL
PRETREATED PROCESS WW & BOILER
MINOR

RECEIVED
JAN - 8 1990
Dept. of Environmental Quality
Bureau of Pollution Control

NOTE: Read instructions before completing this form.

MONITORING PERIOD

	YEAR (20-21)	MO (22-23)	DAY (24-25)		YEAR (26-27)	MO (28-29)	DAY (30-31)
FROM	89	11	01	TO	89	11	30

PARAMETER (32-37)		QUANTITY OR LOADING (3 Card Only) (46-53) AVERAGE	QUANTITY OR LOADING (54-61) MAXIMUM	UNITS	QUALITY OR CONCENTRATION (4 Card Only) (38-45) MINIMUM	QUALITY OR CONCENTRATION (46-53) AVERAGE	QUALITY OR CONCENTRATION (54-61) MAXIMUM	UNITS	NO. EX (62-63)	FREQUENCY OF ANALYSIS (64-68)	SAMPLE TYPE (69-70)
PH	SAMPLE MEASUREMENT	******	******		5.1	******	******		0	3/7	grab
00400 1 0 0 EFFLUENT GROSS VALUE	PERMIT REQUIREMENT	******	******	**** ****	5.0 MINIMUM	******	******	SU		TWICE/WEEK	GRAB
OIL & GREASE (FREON EXTR.-IR METH) TOT, RC	SAMPLE MEASUREMENT	******	******		******	24	30		0	3/7	grab
00560 1 0 0 EFFLUENT GROSS VALUE	PERMIT REQUIREMENT	******	******	**** ****	******	50 DAILY AV	100 DAILY MX	MG/L		TWICE/WEEK	GRAB
PHENOLS	SAMPLE MEASUREMENT	******	55		******	******	******		0	3/7	grab
46000 1 0 0 EFFLUENT GROSS VALUE	PERMIT REQUIREMENT	******	48.8 DAILY MX	LBS/DY	******	******	******	**** ****		WEEKLY	GRAB
FLOW, IN CONDUIT OR THRU TREATMENT PLANT	SAMPLE MEASUREMENT	45287	55,220		******	******	******		0	1/1	INST
50050 1 0 0 EFFLUENT GROSS VALUE	PERMIT REQUIREMENT	REPORT DAILY AV	REPORT DAILY MX	MGD	******	******	******	**** ****		DAILY	CONTIN
	SAMPLE MEASUREMENT										
	PERMIT REQUIREMENT										
	SAMPLE MEASUREMENT										
	PERMIT REQUIREMENT										
	SAMPLE MEASUREMENT										
	PERMIT REQUIREMENT										

NAME/TITLE PRINCIPAL EXECUTIVE OFFICER

John J. Getz
TYPED OR PRINTED

I CERTIFY UNDER PENALTY OF LAW THAT I HAVE PERSONALLY EXAMINED AND AM FAMILIAR WITH THE INFORMATION SUBMITTED HEREIN; AND BASED ON MY INQUIRY OF THOSE INDIVIDUALS IMMEDIATELY RESPONSIBLE FOR OBTAINING THE INFORMATION, I BELIEVE THE SUBMITTED INFORMATION IS TRUE, ACCURATE AND COMPLETE. I AM AWARE THAT THERE ARE SIGNIFICANT PENALTIES FOR SUBMITTING FALSE INFORMATION, INCLUDING THE POSSIBILITY OF FINE AND IMPRISONMENT. SEE 18 U.S.C. § 1001 AND 33 U.S.C. § 1319. *(Penalties under these statutes may include fines up to $10,000 and or maximum imprisonment of between 6 months and 5 years.)*

John J. Getz - Mgr.
SIGNATURE OF PRINCIPAL EXECUTIVE OFFICER OR AUTHORIZED AGENT

TELEPHONE: AREA CODE 601 | NUMBER 328-7551

DATE: YEAR 89 | MO 12 | DAY 29

COMMENT AND EXPLANATION OF ANY VIOLATIONS *(Reference all attachments here)*

PERMITTEE NAME/ADDRESS (Include Facility Name/Location if different)

NAME KERR - MCGEE (COLUMBUS)

ADDRESS P.O. BOX 906

P.O. Box 906

COLUMBUS MS 39701

FACILITY

LOCATION

ATTN: John J. Getz

NATIONAL POLLUTANT DISCHARGE ELIMINATION SYSTEM (NPDES)

DISCHARGE MONITORING REPORT (DMR)

(2-16) MSP 090021 PERMIT NUMBER

(17-19) 001 A DISCHARGE NUMBER

F - FINAL

PRETREATED PROCESS WW & BOILER

TE

MONITORING PERIOD

	YEAR	MO	DAY		YEAR	MO	DAY
FROM	89	10	01	TO	89	10	31
	(20-21)	(22-23)	(24-25)		(26-27)	(28-29)	(30-31)

NOTE: Read instructions before completing this form.

PARAMETER (32-37)		(3 Card Only) QUANTITY OR LOADING (46-53) AVERAGE	(54-61) MAXIMUM	UNITS	(4 Card Only) QUALITY OR CONCENTRATION (38-45) MINIMUM	(46-53) AVERAGE	(54-61) MAXIMUM	UNITS	NO. EX (62-63)	FREQUENCY OF ANALYSIS (64-68)	SAMPLE TYPE (69-70)
PH 00400 1 00 Effluent Gross value	SAMPLE MEASUREMENT				5.8				0	3/7	GRAB
	PERMIT REQUIREMENT										
Oil & Grease (Freon Extr- [illegible]eth) tot RC 00560 1 00 effluent Gross Value Phenols	SAMPLE MEASUREMENT					15.8	56.3		0	3/7	GRAB
	PERMIT REQUIREMENT		XXXX9			5D	100				
PHENOLS 46000 1 0 0 Effluent Gross Value flow, In Conduit Dr.	SAMPLE MEASUREMENT		117.9						0	3/7	GRAB
	PERMIT REQUIREMENT		48.8								
Thru Treatment Plant 50050 1 0 0 Effluent Gross Value	SAMPLE MEASUREMENT	45,289	77,750						0	1/1	Inst
	PERMIT REQUIREMENT										
	SAMPLE MEASUREMENT										
	PERMIT REQUIREMENT										
	SAMPLE MEASUREMENT										
	PERMIT REQUIREMENT										
	SAMPLE MEASUREMENT										
	PERMIT REQUIREMENT										

NAME/TITLE PRINCIPAL EXECUTIVE OFFICER

John J. Getz

TYPED OR PRINTED

I CERTIFY UNDER PENALTY OF LAW THAT I HAVE PERSONALLY EXAMINED AND AM FAMILIAR WITH THE INFORMATION SUBMITTED HEREIN, AND BASED ON MY INQUIRY OF THOSE INDIVIDUALS IMMEDIATELY RESPONSIBLE FOR OBTAINING THE INFORMATION, I BELIEVE THE SUBMITTED INFORMATION IS TRUE, ACCURATE AND COMPLETE. I AM AWARE THAT THERE ARE SIGNIFICANT PENALTIES FOR SUBMITTING FALSE INFORMATION, INCLUDING THE POSSIBILITY OF FINE AND IMPRISONMENT. SEE 18 U.S.C. § 1001 AND 33 U.S.C. § 1319. *(Penalties under these statutes may include fines up to $10,000 and or maximum imprisonment of between 6 months and 5 years.)*

John J. Getz - Mgr.

SIGNATURE OF PRINCIPAL EXECUTIVE OFFICER OR AUTHORIZED AGENT

TELEPHONE: AREA CODE 601 NUMBER 328-7551

DATE: YEAR 90 MO 01 DAY 19

COMMENT AND EXPLANATION OF ANY VIOLATIONS *(Reference all attachments here)*

PERMITTEE NAME/ADDRESS *(Include Facility Name/Location if different)*

NAME KERR McGEE

ADDRESS P.O. Box 906
Columbus, Miss. 39701
1680

FACILITY

LOCATION

NATIONAL POLLUTANT DISCHARGE ELIMINATION SYSTEM *(NPDES)*

DISCHARGE MONITORING REPORT *(DMR)*

90021 (2-16) PERMIT NUMBER	001 (17-19) DISCHARGE NUMBER

MONITORING PERIOD

	YEAR	MO	DAY		YEAR	MO	DAY
FROM	89	08	01	TO	89	08	31
	(20-21)	(22-23)	(24-25)		(26-27)	(28-29)	(30-31)

RSI

NOTE: Read instructions before completing this form.

PARAMETER (32-37)		(3 Card Only) QUANTITY OR LOADING (46-53) AVERAGE	(54-61) MAXIMUM	UNITS	(4 Card Only) QUALITY OR CONCENTRATION (38-45) MINIMUM	(46-53) AVERAGE	(54-61) MAXIMUM	UNITS	NO. EX (62-63)	FREQUENCY OF ANALYSIS (64-68)	SAMPLE TYPE (69-70)
PH, EFFLUENT 000400	SAMPLE MEASUREMENT				5.6			SU	-0-	3/7	grab
	PERMIT REQUIREMENT				5.0					3/7	grab
C -GREASE 000550	SAMPLE MEASUREMENT			lbs/day		7.4	28	MG/L	-0-	3/7	grab
	PERMIT REQUIREMENT					50	100			3/7	grab
Arsenic, Total 001002	SAMPLE MEASUREMENT			LBS/ /day				MG/L	-0-	1/365	24 hr
	PERMIT REQUIREMENT		.13				4			1/365	24 hr
CHROMIUM, Total 001034	SAMPLE MEASUREMENT							MG/L	-0-	1/365	24 hr
	PERMIT REQUIREMENT		.13	LBS/ /day			4			1/365	24 hr
COPPER, Total 001042	SAMPLE MEASUREMENT			LBS/ /day				MG/L	-0-	1/365	24 hr.
	PERMIT REQUIREMENT		.17				5			1/365	24 hr
P OLS 032730	SAMPLE MEASUREMENT		14.4					MG/L	-0-	3/7	grab
	PERMIT REQUIREMENT		48.8	LBS/day						1/7	grab
FLOW RATE 074060	SAMPLE MEASUREMENT	0.003	0.016	MG/Day						1/1	inst.
	PERMIT REQUIREMENT									1/1	inst.

NAME/TITLE PRINCIPAL EXECUTIVE OFFICER		TELEPHONE		DATE		
A. L. Martin Vice President/Gen.Mgr.	I CERTIFY UNDER PENALTY OF LAW THAT I HAVE PERSONALLY EXAMINED AND AM FAMILIAR WITH THE INFORMATION SUBMITTED HEREIN; AND BASED ON MY INQUIRY OF THOSE INDIVIDUALS IMMEDIATELY RESPONSIBLE FOR OBTAINING THE INFORMATION, I BELIEVE THE SUBMITTED INFORMATION IS TRUE, ACCURATE AND COMPLETE. I AM AWARE THAT THERE ARE SIGNIFICANT PENALTIES FOR SUBMITTING FALSE INFORMATION, INCLUDING THE POSSIBILITY OF FINE AND IMPRISONMENT SEE 18 U.S.C § 1001 AND 33 U.S.C § 1319. *(Penalties under these statutes may include fines up to $10,000 and or maximum imprisonment of between 6 months and 5 years.)*	G.L. Hamrod SIGNATURE OF PRINCIPAL EXECUTIVE OFFICER OR AUTHORIZED AGENT	601 328-7551 AREA CODE NUMBER	1 89 08 15 YEAR MO DAY
TYPED OR PRINTED						

COMMENT AND EXPLANATION OF ANY VIOLATIONS *(Reference all attachments here)*

PERMITTEE NAME/ADDRESS *(Include Facility Name/Location if different)*

NAME KERR-MCGEE (COLUMBUS)

ADDRESS P. O. BOX 906

P. O. BOX 906

COLUMBUS MS 38701

FACILITY

LOCATION

ATTN: G. R. HARROD

NATIONAL POLLUTANT DISCHARGE ELIMINATION SYSTEM *(NPDES)*

DISCHARGE MONITORING REPORT *(DMR)*

(2-16) MSP090021 PERMIT NUMBER

(17-19) 001 A DISCHARGE NUMBER

F - FINAL

PRETREATED PROCESS WW & BOILER

MONITORING PERIOD

	YEAR	MO	DAY		YEAR	MO	DAY
FROM	89	07	01	TO	89	07	31
	(20-21)	*(22-23)*	*(24-25)*		*(26-27)*	*(28-29)*	*(30-31)*

MINOR (SUBR NO)

NOTE: Read instructions before completing this form.

PARAMETER *(32-37)*		*(3 Card Only)* QUANTITY OR LOADING *(46-53)* AVERAGE	*(54-61)* MAXIMUM	UNITS	*(4 Card Only)* QUALITY OR CONCENTRATION *(38-45)* MINIMUM	*(46-53)* AVERAGE	*(54-61)* MAXIMUM	UNITS	NO. EX *(62-63)*	FREQUENCY OF ANALYSIS *(64-68)*	SAMPLE TYPE *(69-70)*
PH	SAMPLE MEASUREMENT	******	******		5.4	******	******		0	3/7	Grab
00400 1 0 0 EFFLUENT GROSS VALUE	PERMIT REQUIREMENT	******	****** **** ****		5.0 MINIMUM	******	******	SU		TWICE/WEEK	GRAB
OIL & GREASE (FREON EXTR.-IR METH) TOT, RC	SAMPLE MEASUREMENT	******	******		******	62.8	140		5	3/7	Grab
00560 1 0 0 EFFLUENT GROSS VALUE	PERMIT REQUIREMENT	******	****** **** ****		******	50 DAILY AV	100 DAILY MX	MG/L		TWICE/WEEK	GRAB
PHENOLS	SAMPLE MEASUREMENT	******	37.1		******	******	******		0	3/7	Grab
46000 1 0 0 EFFLUENT GROSS VALUE	PERMIT REQUIREMENT	******	48.8 DAILY MX	LBS/DY	******	******	****** **** ****			WEEKLY	GRAB
FLOW, IN CONDUIT OR THRU TREATMENT PLANT	SAMPLE MEASUREMENT	0.039	0.061		******	******	******			1/1	Inst.
50050 1 0 0 EFFLUENT GROSS VALUE	PERMIT REQUIREMENT	REPORT DAILY AV	REPORT DAILY MX	MGD	******	******	****** **** ****			DAILY	CONTIN
Arsenic, Total 001002	SAMPLE MEASUREMENT		NA				NA			1/365	24 hr
	PERMIT REQUIREMENT		.13	lbs/day			4	MG/L		1/365	24 hr
Chromium, Total 01034	SAMPLE MEASUREMENT		NA				NA			1/365	24 hr
	PERMIT REQUIREMENT		.13	lbs/day			4	MG/L		1/365	24 hr
Copper ~~Copper~~, Total 001042	SAMPLE MEASUREMENT		NA				NA			1/365	24 hr
	PERMIT REQUIREMENT		.17	lbs/day			5	MG/L			

NAME/TITLE PRINCIPAL EXECUTIVE OFFICER

TYPED OR PRINTED

I CERTIFY UNDER PENALTY OF LAW THAT I HAVE PERSONALLY EXAMINED AND AM FAMILIAR WITH THE INFORMATION SUBMITTED HEREIN; AND BASED ON MY INQUIRY OF THOSE INDIVIDUALS IMMEDIATELY RESPONSIBLE FOR OBTAINING THE INFORMATION, I BELIEVE THE SUBMITTED INFORMATION IS TRUE, ACCURATE AND COMPLETE. I AM AWARE THAT THERE ARE SIGNIFICANT PENALTIES FOR SUBMITTING FALSE INFORMATION, INCLUDING THE POSSIBILITY OF FINE AND IMPRISONMENT. SEE 18 U.S.C. § 1001 AND 33 U.S.C. § 1319. *(Penalties under these statutes may include fines up to $10,000 and/or maximum imprisonment of between 6 months and 5 years.)*

SIGNATURE OF PRINCIPAL EXECUTIVE OFFICER OR AUTHORIZED AGENT

TELEPHONE: AREA CODE 601 NUMBER 328-7551

DATE: YEAR MO DAY

COMMENT AND EXPLANATION OF ANY VIOLATIONS *(Reference all attachments here)*

PERMITTEE NAME/ADDRESS (Include Facility Name/Location if different)

NAME KERR-MCGEE (COLUMBUS)

ADDRESS P. O. BOX [illegible]

P. O. BOX 906

COLUMBUS MS 38701

FACILITY

LOCATION

ATTN: G. R. HARDCOPT

RECEIVED
AUG 04 1989
Dept. of Natural Resources
Bureau of Pollution Control

NATIONAL POLLUTANT DISCHARGE ELIMINATION SYSTEM (NPDES)

DISCHARGE MONITORING REPORT (DMR)

(2-16) MS0090021 PERMIT NUMBER

(17-19) 001 A DISCHARGE NUMBER

MONITORING PERIOD

FROM	YEAR	MO	DAY	TO	YEAR	MO	DAY
	89	06	01		89	06	30
	(20-21)	(22-23)	(24-25)		(26-27)	(28-29)	(30-31)

T2C

F - FINAL

PRETREATED PROCESS WW & BOILER

T52

MINOR (SUBR NO)

NOTE: Read instructions before completing this form.

PARAMETER (32-37)		(3 Card Only) QUANTITY OR LOADING (46-53) AVERAGE	(54-61) MAXIMUM	UNITS	(4 Card Only) QUALITY OR CONCENTRATION (38-45) MINIMUM	(46-53) AVERAGE	(54-61) MAXIMUM	UNITS	NO. EX (62-63)	FREQUENCY OF ANALYSIS (64-68)	SAMPLE TYPE (69-70)
PH	SAMPLE MEASUREMENT	******	******		6.2	******	******		0	3/7	grab
00400 1 0 0 EFFLUENT GROSS VALUE	PERMIT REQUIREMENT	******	******	**** ****	5.0 MINIMUM	******	******	SU		TWICE/WEEK	GRAB
O[illegible] & GREASE (FREON EXTR.-IR METH) TOT, RC	SAMPLE MEASUREMENT	******	******		******	88.8	192		5	3/7	grab
00560 1 0 0 EFFLUENT GROSS VALUE	PERMIT REQUIREMENT	******	******	**** ****	******	50 DAILY AV	100 DAILY MX	MG/L		TWICE/WEEK	GRAB
PHENOLS	SAMPLE MEASUREMENT	******	29.0		******	******	******		0	3/7	grab
46000 1 0 0 EFFLUENT GROSS VALUE	PERMIT REQUIREMENT	******	43.8 DAILY MX	LBS/DY	******	******	******	**** ****		WEEKLY	GRAB
FLOW, IN CONDUIT OR THRU TREATMENT PLANT	SAMPLE MEASUREMENT	0.044	0.069		******	******	******			1/1	cont.
50050 1 0 0 EFFLUENT GROSS VALUE	PERMIT REQUIREMENT	REPORT DAILY AV	REPORT DAILY MX	MGD	******	******	******	**** ****		DAILY	CONTIN
	SAMPLE MEASUREMENT										
	PERMIT REQUIREMENT										
[illegible]	SAMPLE MEASUREMENT										
	PERMIT REQUIREMENT										
	SAMPLE MEASUREMENT										
	PERMIT REQUIREMENT										

NAME/TITLE PRINCIPAL EXECUTIVE OFFICER

A. L. Martin
Vice President/Gen. Manager

TYPED OR PRINTED

I CERTIFY UNDER PENALTY OF LAW THAT I HAVE PERSONALLY EXAMINED AND AM FAMILIAR WITH THE INFORMATION SUBMITTED HEREIN; AND BASED ON MY INQUIRY OF THOSE INDIVIDUALS IMMEDIATELY RESPONSIBLE FOR OBTAINING THE INFORMATION, I BELIEVE THE SUBMITTED INFORMATION IS TRUE, ACCURATE AND COMPLETE. I AM AWARE THAT THERE ARE SIGNIFICANT PENALTIES FOR SUBMITTING FALSE INFORMATION, INCLUDING THE POSSIBILITY OF FINE AND IMPRISONMENT. SEE 18 U.S.C. § 1001 AND 33 U.S.C. § 1319. *(Penalties under these statutes may include fines up to $10,000 and or maximum imprisonment of between 6 months and 5 years.)*

SIGNATURE OF PRINCIPAL EXECUTIVE OFFICER OR AUTHORIZED AGENT

TELEPHONE: AREA CODE 601 | NUMBER 328-7551

DATE: YEAR 89 | MO 07 | DAY 19

COMMENT AND EXPLANATION OF ANY VIOLATIONS *(Reference all attachments here)*

NAME [illegible]
ADDRESS P.O. BOX 906
COLUMBUS MS. 39701
1680
FACILITY
LOCATION

(2-16) PERMIT NUMBER: 90021
(17-19) DISCHARGE NUMBER: 001

OMB No. 2040-0004
Approval expires 12-31-87

MONITORING PERIOD

	YEAR	MO	DAY		YEAR	MO	DAY
FROM	89	05	01	TO	89	06	01
	(20-21)	(22-23)	(24-25)		(26-27)	(28-29)	(30-31)

NOTE: Read instructions before completing this form.

PARAMETER (32-37)		(3 Card Only) QUANTITY OR LOADING (46-53) AVERAGE	(54-61) MAXIMUM	UNITS	(4 Card Only) QUALITY OR CONCENTRATION (38-45) MINIMUM	(46-53) AVERAGE	(54-61) MAXIMUM	UNITS	NO. EX (62-63)	FREQUENCY OF ANALYSIS (64-68)	SAMPLE TYPE (69-70)
PH, EFFLUENT 000400	SAMPLE MEASUREMENT				6.0			SU	0	3/7	grab
	PERMIT REQUIREMENT				5.0					3/7	grab
OIL-GREASE 00550	SAMPLE MEASUREMENT			LBS/DAY		71.8	178	MG/L	5	3/7	grab
	PERMIT REQUIREMENT					50	100			3/7	grab
ARSENIC, TOTAL 001002	SAMPLE MEASUREMENT		NA	LBS/DAY			NA	MG/L	0	1/365	24 hr.
	PERMIT REQUIREMENT		.13				4			1/365	24 hr.
CHROMIUM, TOTAL 001034	SAMPLE MEASUREMENT		NA	LBS/DAY			NA	MG/L	0	1/365	24 hr.
	PERMIT REQUIREMENT		.13				4			1/365	24 hr.
COPPER, TOTAL 001042	SAMPLE MEASUREMENT		NA	LBS/DAY			NA	MG/L	0	1/365	24 hr
	PERMIT REQUIREMENT		.17				5			1/365	24 hr
PHENOLS 32730	SAMPLE MEASUREMENT		94.4	LBS/DAY				MG/L	3	3/7	GRAB
	PERMIT REQUIREMENT		48.8							1/7	GRAB
FLOW RATE 074060	SAMPLE MEASUREMENT	0.045	0.072	MG/DAY						1/1	INST.
	PERMIT REQUIREMENT									1/1	INST.

NAME/TITLE PRINCIPAL EXECUTIVE OFFICER
A.L. Martin
Vice president/Gen'l Mgr.
TYPED OR PRINTED

I CERTIFY UNDER PENALTY OF LAW THAT I HAVE PERSONALLY EXAMINED AND AM FAMILIAR WITH THE INFORMATION SUBMITTED HEREIN AND BASED ON MY INQUIRY OF THOSE INDIVIDUALS IMMEDIATELY RESPONSIBLE FOR OBTAINING THE INFORMATION I BELIEVE THE SUBMITTED INFORMATION IS TRUE, ACCURATE AND COMPLETE. I AM AWARE THAT THERE ARE SIGNIFICANT PENALTIES FOR SUBMITTING FALSE INFORMATION INCLUDING THE POSSIBILITY OF FINE AND IMPRISONMENT SEE 18 USC § 1001 AND 33 USC § 1319 *(Penalties under these statutes may include fines up to $10,000 and/or maximum imprisonment of between 6 months and 5 years.)*

SIGNATURE OF PRINCIPAL EXECUTIVE OFFICER OR AUTHORIZED AGENT

TELEPHONE: AREA CODE 601 NUMBER 328-7551

DATE: YEAR MO DAY

COMMENT AND EXPLANATION OF ANY VIOLATIONS *(Reference all attachments here)*

NAME KERR-MCGEE

ADDRESS P.O. BOX 906

COLUMBUS MS. 39701

1680

FACILITY

LOCATION

(12-16) PERMIT NUMBER: 90021

(17-19) DISCHARGE NUMBER: 001

MONITORING PERIOD

	YEAR	MO	DAY		YEAR	MO	DAY
FROM	89 (20-21)	04 (22-23)	01 (24-25)	TO	89 (26-27)	05 (28-29)	01 (30-31)

TSC

Form Approved
OMB No. 2040-0004
Approval expires 12-31-8

NOTE: Read instructions before completing this form.

PARAMETER (32-37)		(3 Card Only) QUANTITY OR LOADING (46-53) AVERAGE	(54-61) MAXIMUM	UNITS	(4 Card Only) QUALITY OR CONCENTRATION (38-45) MINIMUM	(46-53) AVERAGE	(54-61) MAXIMUM	UNITS	NO. EX (62-63)	FREQUENCY OF ANALYSIS (64-68)	SAMPLE TYPE (69-70)
PH, EFFLUENT 000400	SAMPLE MEASUREMENT	—	—	—	5.3			SU	0	3/7	grab
	PERMIT REQUIREMENT	—	—	—	5.0	—	—			3/7	grab
OIL-GREASE 00550	SAMPLE MEASUREMENT			LBS/DAY		35.9	80	MG/L	0	3/7	grab
	PERMIT REQUIREMENT	—			—	50	100			3/7	grab
ARSENIC, TOTAL 001002	SAMPLE MEASUREMENT		NA	LBS/DAY			NA	MG/L	0	1/365	24 hr
	PERMIT REQUIREMENT	—	.13		—	—	4			1/365	24 hr
CHROMIUM, TOTAL 001034	SAMPLE MEASUREMENT		NA	LBS/DAY			NA	MG/L	0	1/365	24 hr
	PERMIT REQUIREMENT	—	.13		—	—	4			1/365	24 hr
COPPER, TOTAL 001042	SAMPLE MEASUREMENT		NA	LBS/DAY			NA	MG/L	0	1/365	24 hr
	PERMIT REQUIREMENT	—	.17		—	—	5			1/365	24 hr
PHENOLS 32730	SAMPLE MEASUREMENT		98.4	LBS/DAY				MG/L	2	3/7	GRAB
	PERMIT REQUIREMENT	—	48.8				—			1/7	GRAB
FLOW RATE 074060	SAMPLE MEASUREMENT	0.039	0.059	MG/DAY	—	—	—	—		1/1	INST.
	PERMIT REQUIREMENT	—	—		—	—	—	—		1/1	INST.

NAME/TITLE PRINCIPAL EXECUTIVE OFFICER

A.L. Martin
Vice president/Gen'l Mgr.

TYPED OR PRINTED

I CERTIFY UNDER PENALTY OF LAW THAT I HAVE PERSONALLY EXAMINED AND AM FAMILIAR WITH THE INFORMATION SUBMITTED HEREIN AND BASED ON MY INQUIRY OF THOSE INDIVIDUALS IMMEDIATELY RESPONSIBLE FOR OBTAINING THE INFORMATION I BELIEVE THE SUBMITTED INFORMATION IS TRUE, ACCURATE AND COMPLETE. I AM AWARE THAT THERE ARE SIGNIFICANT PENALTIES FOR SUBMITTING FALSE INFORMATION, INCLUDING THE POSSIBILITY OF FINE AND IMPRISONMENT SEE 18 USC § 1001 AND 33 USC § 1319 (Penalties under these statutes may include fines up to $10,000 and/or maximum imprisonment of between 6 months and 5 years.)

SIGNATURE OF PRINCIPAL EXECUTIVE OFFICER OR AUTHORIZED AGENT

TELEPHONE: AREA CODE 601 | NUMBER 328-7551

DATE: YEAR | MO | DAY

COMMENT AND EXPLANATION OF ANY VIOLATIONS (Reference all attachments here)

PERMITTEE NAME/ADDRESS (*Include Facility Name/Location if different*)

Kerr McGee
P. O. Box 906
Columbus, MS 39701
1680

FACILITY

LOCATION

NATIONAL POLLUTANT DISCHARGE ELIMINATION SYSTEM (*NPDES*)
DISCHARGE MONITORING REPORT (*DMR*)

(2-16)	(17-19)
90021	001
PERMIT NUMBER	DISCHARGE NUMBER

Form Approved
OMB No. 2040-0004
Approval expires 12-31-87

TSE

MONITORING PERIOD						
FROM	YEAR	MO	DAY	TO	YEAR	MO	DAY
	89	3	1		89	4	1
	(20-21)	(22-23)	(24-25)		(26-27)	(28-29)	(30-31)

NOTE: Read instructions before completing this form.

PARAMETER (32-37)		(3 Card Only) QUANTITY OR LOADING (46-53) AVERAGE	(54-61) MAXIMUM	UNITS	(4 Card Only) QUALITY OR CONCENTRATION (38-45) MINIMUM	(46-53) AVERAGE	(54-61) MAXIMUM	UNITS	NO. EX (62-63)	FREQUENCY OF ANALYSIS (64-68)	SAMPLE TYPE (69-70)
PH, EFFLUENT	SAMPLE MEASUREMENT				6.8			SU	0	3/7	grab
000400	PERMIT REQUIREMENT				5.0					3/7	grab
OIL-GREASE	SAMPLE MEASUREMENT			LBS/DAY		64.3	149	MG/L	3	3/7	grab
000550	PERMIT REQUIREMENT					50	100			3/7	grab
ARSENIC, TOTAL	SAMPLE MEASUREMENT		0.008	LBS/DAY			0.03	MG/L	0	1/365	24hr.
001002	PERMIT REQUIREMENT		.13				4			1/365	24hr.
CHROMIUM, TOTAL	SAMPLE MEASUREMENT		0.005	LBS/DAY			0.02	MG/L	0	1/365	24hr.
001034	PERMIT REQUIREMENT		.13				4			1/365	24hr.
COPPER, TOTAL	SAMPLE MEASUREMENT		0.005	LBS/DAY			0.02	MG/L	0	1/365	24hr.
001042	PERMIT REQUIREMENT		.17				5			1/365	24hr.
PHENOLS	SAMPLE MEASUREMENT		39.9	LBS/DAY				MG/L	0	3/7	GRAB
032730	PERMIT REQUIREMENT		48.8							1/7	GRAB
FLOW RATE	SAMPLE MEASUREMENT	.049	.070	MG/DAY					0	1/1	INST.
074060	PERMIT REQUIREMENT									1/1	INST.

NAME/TITLE PRINCIPAL EXECUTIVE OFFICER

A.L. Martin
Vice President/Genl. Mgr

TYPED OR PRINTED

I CERTIFY UNDER PENALTY OF LAW THAT I HAVE PERSONALLY EXAMINED AND AM FAMILIAR WITH THE INFORMATION SUBMITTED HEREIN AND BASED ON MY INQUIRY OF THOSE INDIVIDUALS IMMEDIATELY RESPONSIBLE FOR OBTAINING THE INFORMATION I BELIEVE THE SUBMITTED INFORMATION IS TRUE ACCURATE AND COMPLETE I AM AWARE THAT THERE ARE SIGNIFICANT PENALTIES FOR SUBMITTING FALSE INFORMATION INCLUDING THE POSSIBILITY OF FINE AND IMPRISONMENT SEE 18 USC § 1001 AND 33 USC § 1319 (*Penalties under these statutes may include fines up to $10,000 and or maximum imprisonment of between 6 months and 5 years.*)

SIGNATURE OF PRINCIPAL EXECUTIVE OFFICER OR AUTHORIZED AGENT

TELEPHONE		DATE		
601	328-7551	89	4	
AREA CODE	NUMBER	YEAR	MO	DAY

COMMENT AND EXPLANATION OF ANY VIOLATIONS (*Reference all attachments here*)

~~Please refer to the attached February 20, 1989 letter for explanation of phenol exceedence.~~ Please refer to the attached April 20, 1989 letter for explination of Oil and grease exceedence.

PERMITTEE NAME/ADDRESS (Include Facility Name/Location if different)

Kerr McGee
P. O. Box 906
Columbus, MS 39701
1680
FACILITY
LOCATION

NATIONAL POLLUTANT DISCHARGE ELIMINATION SYSTEM (NPDES)
DISCHARGE MONITORING REPORT (DMR)

Form Approved
OMB No. 2040-0004
Approval expires 12-31-87

(2-16) PERMIT NUMBER	(17-19) DISCHARGE NUMBER
90021	001

MONITORING PERIOD

	YEAR	MO	DAY		YEAR	MO	DAY
FROM	89	2	1	TO	89	3	1
	(20-21)	(22-23)	(24-25)		(26-27)	(28-29)	(30-31)

T5e

NOTE: Read instructions before completing this form.

PARAMETER (32-37)		(3 Card Only) QUANTITY OR LOADING (46-53) AVERAGE	(54-61) MAXIMUM	UNITS	(4 Card Only) QUALITY OR CONCENTRATION (38-45) MINIMUM	(46-53) AVERAGE	(54-61) MAXIMUM	UNITS	NO. EX (62-63)	FREQUENCY OF ANALYSIS (64-68)	SAMPLE TYPE (69-70)
PH, EFFLUENT 000400	SAMPLE MEASUREMENT				5.3				0	3/7	grab
	PERMIT REQUIREMENT				5.0			SU		3/7	grab
[illegible]L-GREASE 000550	SAMPLE MEASUREMENT			LBS/DAY		21.1	68		0	3/7	grab
	PERMIT REQUIREMENT					50	100	MG/L		3/7	grab
ARSENIC, TOTAL 001002	SAMPLE MEASUREMENT			LBS/DAY			NA		0	1/365	24hr.
	PERMIT REQUIREMENT		.13				4	MG/L		1/365	24hr.
CHROMIUM, TOTAL 001034	SAMPLE MEASUREMENT			LBS/DAY			NA		0	1/365	24hr.
	PERMIT REQUIREMENT		.13				4	MG/L		1/365	24hr.
COPPER, XXXTotal 001042	SAMPLE MEASUREMENT			LBS/DAY			NA		0	1/365	24hr.
	PERMIT REQUIREMENT		.17				5	MG/L		1/365	24hr.
[illegible]ENOLS 032730	SAMPLE MEASUREMENT		54.9	LBS/DAY					1	3/7	GRAB
	PERMIT REQUIREMENT		48.8					MG/L		1/7	GRAB
FLOW RATE 074060	SAMPLE MEASUREMENT	.056	.094						0	1/1	INST.
	PERMIT REQUIREMENT			MG/DAY						1/1	INST.

NAME/TITLE PRINCIPAL EXECUTIVE OFFICER

A.L. Martin
Vice President/Genl. Mgr.

TYPED OR PRINTED

I CERTIFY UNDER PENALTY OF LAW THAT I HAVE PERSONALLY EXAMINED AND AM FAMILIAR WITH THE INFORMATION SUBMITTED HEREIN AND BASED ON MY INQUIRY OF THOSE INDIVIDUALS IMMEDIATELY RESPONSIBLE FOR OBTAINING THE INFORMATION I BELIEVE THE SUBMITTED INFORMATION IS TRUE ACCURATE AND COMPLETE I AM AWARE THAT THERE ARE SIGNIFICANT PENALTIES FOR SUBMITTING FALSE INFORMATION INCLUDING THE POSSIBILITY OF FINE AND IMPRISONMENT SEE 18 USC § 1001 AND 33 USC § 1319. *(Penalties under these statutes may include fines up to $10,000 and or maximum imprisonment of between 6 months and 5 years.)*

SIGNATURE OF PRINCIPAL EXECUTIVE OFFICER OR AUTHORIZED AGENT

TELEPHONE: AREA CODE 601 NUMBER 328-755

DATE: YEAR 1 89 MO 4 DAY

COMMENT AND EXPLANATION OF ANY VIOLATIONS *(Reference all attachments here)*

~~Please refer to the attached April 20, 1989 letter~~
~~for explanation of oil and grease exceedence.~~ Please refer to the attached February 20, 1989 letter for explanation of phen exceedence.

PERMITTEE NAME/ADDRESS (*Include Facility Name/Location if different*)

NAME Kerr McGee

ADDRESS P. O. Box 906
Columbus, MS 39701
1680

FACILITY

LOCATION

NATIONAL POLLUTANT DISCHARGE ELIMINATION SYSTEM (*NPDES*)

DISCHARGE MONITORING REPORT (*DMR*)

Form Approved
OMB No. 2040-0
Approval expires 1.

(2-16) PERMIT NUMBER	(17-19) DISCHARGE NUMBER
90021	001

MONITORING PERIOD	YEAR	MO	DAY		YEAR	MO	DAY
FROM	89	1	1	TO	89	2	1
	(20-21)	(22-23)	(24-25)		(26-27)	(28-29)	(30-31)

NOTE: Read instructions before completing this form.

PARAMETER (32-37)		(3 Card Only) QUANTITY OR LOADING (46-53) AVERAGE	(54-61) MAXIMUM	UNITS	(4 Card Only) QUALITY OR CONCENTRATION (38-45) MINIMUM	(46-53) AVERAGE	(54-61) MAXIMUM	UNITS	NO. EX (62-63)	FREQUENCY OF ANALYSIS (64-68)	SAMPLE TYPE (69-70)
PH, EFFLUENT	SAMPLE MEASUREMENT				6.4				0	3/7	grab
000400	PERMIT REQUIREMENT				5.0			SU		3/7	grab
OIL-GREASE	SAMPLE MEASUREMENT			lbs./day		35.9	77		0	3/7	grab
000550	PERMIT REQUIREMENT					50	100	MG/L		3/7	grab
ARSENIC, TOTAL	SAMPLE MEASUREMENT		0.01				0.01		0	1/365	24hr.
001002	PERMIT REQUIREMENT		.13	lbs/day			4	MG/L		1/365	24hr.
CHROMIUM, TOTAL	SAMPLE MEASUREMENT		0.007				0.02		0	1/365	24hr.
001034	PERMIT REQUIREMENT		.13	lbs/day			4	MG/L		1/365	24hr.
COPPER, TOTAL	SAMPLE MEASUREMENT		0.007				0.02		0	1/365	24hr.
001042	PERMIT REQUIREMENT		.17	lbs/day			5	MG/L		1/365	24hr.
PHENOLS	SAMPLE MEASUREMENT		126						2	3/7	GRAB
032730	PERMIT REQUIREMENT		48.8	lbs/day				MG/L		1/7	GRAB
FLOW RATE	SAMPLE MEASUREMENT	.050	.147							1/1	INST.
074060	PERMIT REQUIREMENT			MG/DAY						1/1	INST.

NAME/TITLE PRINCIPAL EXECUTIVE OFFICER		TELEPHONE		DATE		
A.L. Martin Vice President/Genl. Mgr.	I CERTIFY UNDER PENALTY OF LAW THAT I HAVE PERSONALLY EXAMINED AND AM FAMILIAR WITH THE INFORMATION SUBMITTED HEREIN AND BASED ON MY INQUIRY OF THOSE INDIVIDUALS IMMEDIATELY RESPONSIBLE FOR OBTAINING THE INFORMATION I BELIEVE THE SUBMITTED INFORMATION IS TRUE ACCURATE AND COMPLETE I AM AWARE THAT THERE ARE SIGNIFICANT PENALTIES FOR SUBMITTING FALSE INFORMATION INCLUDING THE POSSIBILITY OF FINE AND IMPRISONMENT SEE 18 USC § 1001 AND 33 USC § 1319 *(Penalties under these statutes may include fines up to $10,000 and or maximum imprisonment of between 6 months and 5 years.)*	SIGNATURE OF PRINCIPAL EXECUTIVE OFFICER OR AUTHORIZED AGENT	601 (AREA CODE)	328-7551 (NUMBER)	89 (YEAR)	4 (MO)	(DAY)
TYPED OR PRINTED						

COMMENT AND EXPLANATION OF ANY VIOLATIONS (*Reference all attachments here*)

~~Please refer to the attached April 20, 1988 letter for explanation of oil and grease exceedence.~~ Please refer to the attached February 20, 1989 letter for explanation of phenol exceedence.

PERMITTEE NAME/ADDRESS (*Include Facility Name/Location if different*)
NAME KERR McGEE
ADDRESS P.O. Box 906
Columbus, Mississippi 39701
FACILITY
LOCATION

NATIONAL POLLUTANT DISCHARGE ELIMINATION SYSTEM (*NPDES*)
DISCHARGE MONITORING REPORT (*DMR*)

Form Approved
OMB No. 2040-0004
Approval expires 12-31-87

RECEIVED FEB 01 1989 DEPT OF NATURAL RESOURCES BUREAU OF POLLUTION CONTROL

1988

TSE

(2-16) PERMIT NUMBER	(17-19) DISCHARGE NUMBER
9002	001

MONITORING PERIOD

	YEAR (20-21)	MO (22-23)	DAY (24-25)		YEAR (26-27)	MO (28-29)	DAY (30-31)
FROM	88	12	1	TO	88	12	31

NOTE: Read instructions before completing this form.

PARAMETER (32-37)		(3 Card Only) QUANTITY OR LOADING (46-53) AVERAGE	(54-61) MAXIMUM	UNITS	(4 Card Only) QUALITY OR CONCENTRATION (38-45) MINIMUM	(46-53) AVERAGE	(54-61) MAXIMUM	UNITS	NO. EX (62-63)	FREQUENCY OF ANALYSIS (64-68)	SAMPLE TYPE (69-70)
pH, EFFLUENT 000400	SAMPLE MEASUREMENT	—	—		5.1	—	—		0	3/7	grab
	PERMIT REQUIREMENT	—	—		5.0	—	—	SU		3/7	grab
O&G-GREASE 000550	SAMPLE MEASUREMENT	—	—		—	43.55	132		1	3/7	grab
	PERMIT REQUIREMENT	—	—		—	50	100	MG/L		3/7	grab
ARSENIC, TOTAL 001002	SAMPLE MEASUREMENT	—	—		—	—	—			1/365	24 hr.
	PERMIT REQUIREMENT	—	.5	LB/DAY	—	—	4	MG/L		1/365	24 hr.
CHROMIUM, TOTAL 001034	SAMPLE MEASUREMENT	—	—		—	—	—			1/365	24 hr.
	PERMIT REQUIREMENT	—	.5	LB/DAY	—	—	4	MG/L		1/365	24 hr.
COPPER, TOTAL 001042	SAMPLE MEASUREMENT	—	—		—	—	—			1/365	24 hr.
	PERMIT REQUIREMENT	—	.62	LB/DAY	—	—	5	MG/L		1/365	24 hr.
PHENOLS 032730	SAMPLE MEASUREMENT	—	40.43		—	—	—		0	3/7	24 hr.
	PERMIT REQUIREMENT	—	48.8	LB/DAY	—	—	—			1/7	grab
FLOW RATE 074060	SAMPLE MEASUREMENT	.039937	.05709		—	—	—			1/1	meter
	PERMIT REQUIREMENT	—	—	MG/DAY	—	—	—			1/1	INST

NAME/TITLE PRINCIPAL EXECUTIVE OFFICER			TELEPHONE		DATE		
A.L. Martin vice president / gen'l. mgr.	I CERTIFY UNDER PENALTY OF LAW THAT I HAVE PERSONALLY EXAMINED AND AM FAMILIAR WITH THE INFORMATION SUBMITTED HEREIN AND BASED ON MY INQUIRY OF THOSE INDIVIDUALS IMMEDIATELY RESPONSIBLE FOR OBTAINING THE INFORMATION I BELIEVE THE SUBMITTED INFORMATION IS TRUE ACCURATE AND COMPLETE I AM AWARE THAT THERE ARE SIGNIFICANT PENALTIES FOR SUBMITTING FALSE INFORMATION INCLUDING THE POSSIBILITY OF FINE AND IMPRISONMENT SEE 18 USC § 1001 AND 33 USC § 1319 (*Penalties under these statutes may include fines up to $10,000 and or maximum imprisonment of between 6 months and 5 years.*)	A.L. Martin	AREA CODE 601	NUMBER 328-7551	YEAR 89	MO 1	DAY 31
TYPED OR PRINTED		SIGNATURE OF PRINCIPAL EXECUTIVE OFFICER OR AUTHORIZED AGENT					

COMMENT AND EXPLANATION OF ANY VIOLATIONS (*Reference all attachments here*)
Major modifications to waste water treatment system are underway.

PERMITTEE NAME/ADDRESS (Include Facility Name/Location if different)

NAME KERR McGEE

ADDRESS P.O. Box 906
Columbus, Mississippi 39701

FACILITY

LOCATION

NATIONAL POLLUTANT DISCHARGE ELIMINATION SYSTEM (NPDES)
DISCHARGE MONITORING REPORT (DMR)

Form Approved
OMB No. 2040-0004
Approval expires 12-31-87

RECEIVED
FEB 01 1989
DEPT. OF NATURAL RESOURCE
BUREAU OF POLLUTION CONTROL

TSE

(2-16) PERMIT NUMBER	(17-19) DISCHARGE NUMBER
90021	001

MONITORING PERIOD

FROM YEAR (20-21)	MO (22-23)	DAY (24-25)	TO YEAR (26-27)	MO (28-29)	DAY (30-31)
88	11	1	88	11	30

NOTE: Read instructions before completing this form.

PARAMETER (32-37)		(3 Card Only) QUANTITY OR LOADING (46-53) AVERAGE	(54-61) MAXIMUM	UNITS	(4 Card Only) QUALITY OR CONCENTRATION (38-45) MINIMUM	(46-53) AVERAGE	(54-61) MAXIMUM	UNITS	NO. EX (62-63)	FREQUENCY OF ANALYSIS (64-68)	SAMPLE TYPE (69-70)
pH, EFFLUENT	SAMPLE MEASUREMENT	—	—		5.6	—	—		0	3/7	grab
000400	PERMIT REQUIREMENT	—	—		5.0	—	—	SU		3/7	grab
Oil - GREASE	SAMPLE MEASUREMENT	—	—		—	87.1	224		4	3/7	grab
000550	PERMIT REQUIREMENT	—	—		—	50	100	MG/L		3/7	grab
ARSENIC, TOTAL	SAMPLE MEASUREMENT	—	—		—	—	—			1/365	24 hr.
001002	PERMIT REQUIREMENT	—	.5	LB/DAY	—	—	4	MG/L		1/365	24 hr.
CHROMIUM, TOTAL	SAMPLE MEASUREMENT	—	—		—	—	—			1/365	24 hr.
001034	PERMIT REQUIREMENT	—	.5	LB/DAY	—	—	4	MG/L		1/365	24 hr.
COPPER, TOTAL	SAMPLE MEASUREMENT	—	—		—	—	—			1/365	24 hr.
001042	PERMIT REQUIREMENT	—	.62	LB/DAY	—	—	5	MG/L		1/365	24 hr.
PHENOLS	SAMPLE MEASUREMENT	—	54.6		—	—	—		1	3/7	24 hr.
032730	PERMIT REQUIREMENT	—	48.8	LB/DAY	—	—	—			1/7	grab
FLOW RATE	SAMPLE MEASUREMENT	.039715	.06027		—	—	—			1/1	meter
074060	PERMIT REQUIREMENT	—	—	MG/DAY	—	—	—			1/1	INST

NAME/TITLE PRINCIPAL EXECUTIVE OFFICER

A.L. Martin
vice president/gen'l. mgr.

TYPED OR PRINTED

I CERTIFY UNDER PENALTY OF LAW THAT I HAVE PERSONALLY EXAMINED AND AM FAMILIAR WITH THE INFORMATION SUBMITTED HEREIN AND BASED ON MY INQUIRY OF THOSE INDIVIDUALS IMMEDIATELY RESPONSIBLE FOR OBTAINING THE INFORMATION, I BELIEVE THE SUBMITTED INFORMATION IS TRUE, ACCURATE AND COMPLETE. I AM AWARE THAT THERE ARE SIGNIFICANT PENALTIES FOR SUBMITTING FALSE INFORMATION, INCLUDING THE POSSIBILITY OF FINE AND IMPRISONMENT. SEE 18 U.S.C. § 1001 AND 33 U.S.C. § 1319. *(Penalties under these statutes may include fines up to $10,000 and/or maximum imprisonment of between 6 months and 5 years.)*

SIGNATURE OF PRINCIPAL EXECUTIVE OFFICER OR AUTHORIZED AGENT

TELEPHONE

AREA CODE	NUMBER
601	328-7551

DATE

YEAR	MO	DAY
89	1	31

COMMENT AND EXPLANATION OF ANY VIOLATIONS *(Reference all attachments here)*

High readings are due to major modifications being performed on waste water treatment system.

PERMITTEE NAME/ADDRESS (*Include Facility Name/Location if different*)

NAME: Kerr McGee

ADDRESS P.O. Box 906
Columbus, Mississippi 39701

FACILITY

LOCATION

NATIONAL POLLUTANT DISCHARGE ELIMINATION SYSTEM (*NPDES*)
DISCHARGE MONITORING REPORT (*DMR*)

Form Approved
OMB No. 2040-0004
Approval expires 12-31-87

RECEIVED
FEB 01 1989
DEPT OF NATURAL RESOURCE
BUREAU OF POLLUTION CONTROL

TSE

(2-16) PERMIT NUMBER	(17-19) DISCHARGE NUMBER
90021	001

MONITORING PERIOD

FROM YEAR (20-21)	MO (22-23)	DAY (24-25)	TO YEAR (26-27)	MO (28-29)	DAY (30-31)
88	10	1	88	10	31

NOTE: Read instructions before completing this form.

PARAMETER (32-37)		(3 Card Only) QUANTITY OR LOADING (46-53) AVERAGE	(54-61) MAXIMUM	UNITS	(4 Card Only) QUALITY OR CONCENTRATION (38-45) MINIMUM	(46-53) AVERAGE	(54-61) MAXIMUM	UNITS	NO. EX (62-63)	FREQUENCY OF ANALYSIS (64-68)	SAMPLE TYPE (69-70)
pH, EFFLUENT 000400	SAMPLE MEASUREMENT	—	—		5.0	—	—		0	3/7	grab
	PERMIT REQUIREMENT	—	—		5.0	—	—	SU		3/7	grab
OIL - GREASE 000550	SAMPLE MEASUREMENT	—	—		—	21.6	138		1	3/7	grab
	PERMIT REQUIREMENT	—	—		—	50	100	MG/L		3/7	grab
ARSENIC - TOTAL 001002	SAMPLE MEASUREMENT	—	—		—	—	—			1/365	24 hr.
	PERMIT REQUIREMENT	—	.5	LB/DAY	—	—	4	MG/L		1/365	24 hr.
CHROMIUM, TOTAL 001034	SAMPLE MEASUREMENT	—	—		—	—	—			1/365	24 hr.
	PERMIT REQUIREMENT	—	.5	LB/DAY	—	—	4	MG/L		1/365	24 hr.
COPPER, TOTAL 001042	SAMPLE MEASUREMENT	—	—		—	—	—			1/365	24 hr.
	PERMIT REQUIREMENT	—	.62	LB/DAY	—	—	5	MG/L		1/365	24 hr.
PHENOLS 032730	SAMPLE MEASUREMENT	—	24.98		—	—	—		0	3/7	24 hr.
	PERMIT REQUIREMENT	—	48.8	LB/DAY	—	—	—			1/7	grab
FLOW RATE 074060	SAMPLE MEASUREMENT	.032875	.0687		—	—	—			1/1	meter
	PERMIT REQUIREMENT	—	—	MG/DAY	—	—	—			1/1	INST

NAME/TITLE PRINCIPAL EXECUTIVE OFFICER			TELEPHONE		DATE		
A.L. Martin vice president/gen'l. mgr. TYPED OR PRINTED	I CERTIFY UNDER PENALTY OF LAW THAT I HAVE PERSONALLY EXAMINED AND AM FAMILIAR WITH THE INFORMATION SUBMITTED HEREIN AND BASED ON MY INQUIRY OF THOSE INDIVIDUALS IMMEDIATELY RESPONSIBLE FOR OBTAINING THE INFORMATION, I BELIEVE THE SUBMITTED INFORMATION IS TRUE, ACCURATE AND COMPLETE. I AM AWARE THAT THERE ARE SIGNIFICANT PENALTIES FOR SUBMITTING FALSE INFORMATION, INCLUDING THE POSSIBILITY OF FINE AND IMPRISONMENT. SEE 18 U.S.C. § 1001 AND 33 U.S.C. § 1319. *(Penalties under these statutes may include fines up to $10,000 and/or maximum imprisonment of between 6 months and 5 years.)*	G.N. Arnold SIGNATURE OF PRINCIPAL EXECUTIVE OFFICER OR AUTHORIZED AGENT	601 AREA CODE	328-7551 NUMBER	89 YEAR	1 MO	31 DAY

COMMENT AND EXPLANATION OF ANY VIOLATIONS (*Reference all attachments here*)

Suspect unrepresentative sample on oil + grease maximum. The other days were significantly lower. The average shown does not include this figure.

PERMITTEE NAME/ADDRESS (*Include Facility Name/Location if different*)

NAME Kerr McGee

ADDRESS P.O. Box 906

Columbus, Ms. 39701

1680

FACILITY

LOCATION

NATIONAL POLLUTANT DISCHARGE ELIMINATION SYSTEM (*NPDES*)
DISCHARGE MONITORING REPORT (*DMR*)

Form Approved
OMB No. 2040-0004
Approval expires 12-31-87

(2-16) PERMIT NUMBER: 90021

(17-19) DISCHARGE NUMBER: 001

MONITORING PERIOD

	YEAR (20-21)	MO (22-23)	DAY (24-25)		YEAR (26-27)	MO (28-29)	DAY (30-31)
FROM	88	09	01	TO	88	10	01

NOTE: Read instructions before completing this form.

PARAMETER (32-37)		(3 Card Only) QUANTITY OR LOADING (46-53) AVERAGE	(54-61) MAXIMUM	UNITS	(4 Card Only) QUALITY OR CONCENTRATION (38-45) MINIMUM	(46-53) AVERAGE	(54-61) MAXIMUM	UNITS	NO. EX (62-63)	FREQUENCY OF ANALYSIS (64-68)	SAMPLE TYPE (69-70)
PH, EFFLUENT	SAMPLE MEASUREMENT	-------	-----	---	4.2	5.42	8.7	SU	4	3/7	grab
00400	PERMIT REQUIREMENT	--------	--------	---	5.0	-----	-------			3/7	grab
L-GREASE	SAMPLE MEASUREMENT	2.92	10.39	lbs/day	.1	9.98	33	MG/L		3/7	grab
000550	PERMIT REQUIREMENT	-------			-------	50	100			3/7	grab
ARSENIC, TOTAL	SAMPLE MEASUREMENT			lbs/day				MG/L		XXX 1/365	24 hr
001002	PERMIT REQUIREMENT	---------	.13		----------	--------	4			1/365	24 hr
CHROMIUM, TOTAL	SAMPLE MEASUREMENT			LBS/DAY				MG/L		1/365	24 hr
001034	PERMIT REQUIREMENT	-------	.13		-------	-------	4			1/365	24 hr
COPPER, TOTAL	SAMPLE MEASUREMENT			1bs/day				MG/L		1/365	24 hr
001042	PERMIT REQUIREMENT	-------	.17		-------	--------	5			1/365	24 hr
ENOLS	SAMPLE MEASUREMENT	10.46 XXXX	29.83	1bs/day	20	43.23	80	MG/L		3/7	grab
032730	PERMIT REQUIREMENT	------	48.8				-------			1/7	grab
FLOW RATE	SAMPLE MEASUREMENT	0.0187	0.0484	MG/day	------	----------	-----	-----		1/1	inst
074060 ,	PERMIT REQUIREMENT	--------	------		------	--------	-------	-----		1/1	inst

NAME/TITLE PRINCIPAL EXECUTIVE OFFICER

A.L. Martin
Vice President/Gen'l Mgr.

TYPED OR PRINTED

I CERTIFY UNDER PENALTY OF LAW THAT I HAVE PERSONALLY EXAMINED AND AM FAMILIAR WITH THE INFORMATION SUBMITTED HEREIN AND BASED ON MY INQUIRY OF THOSE INDIVIDUALS IMMEDIATELY RESPONSIBLE FOR OBTAINING THE INFORMATION, I BELIEVE THE SUBMITTED INFORMATION IS TRUE, ACCURATE AND COMPLETE. I AM AWARE THAT THERE ARE SIGNIFICANT PENALTIES FOR SUBMITTING FALSE INFORMATION, INCLUDING THE POSSIBILITY OF FINE AND IMPRISONMENT. SEE 18 USC § 1001 AND 33 USC § 1319. (*Penalties under these statutes may include fines up to $10,000 and/or maximum imprisonment of between 6 months and 5 years.*)

SIGNATURE OF PRINCIPAL EXECUTIVE OFFICER OR AUTHORIZED AGENT

TELEPHONE: AREA CODE 601 | NUMBER 328-7551

DATE: YEAR 88 | MO 10 | DAY 25

COMMENT AND EXPLANATION OF ANY VIOLATIONS (*Reference all attachments here*)

PERMITTEE NAME/ADDRESS *(Include Facility Name/Location if different)*

NAME Kerr McGee

ADDRESS P.O. Box 906
Columbus, Mississippi 39701
1680

FACILITY

LOCATION

NATIONAL POLLUTANT DISCHARGE ELIMINATION SYSTEM *(NPDES)*

DISCHARGE MONITORING REPORT *(DMR)*

(2-16) PERMIT NUMBER	*(17-19)* DISCHARGE NUMBER
90021	001

MONITORING PERIOD

	YEAR	MO	DAY		YEAR	MO	DAY
FROM	89	09	01	TO	89	09	30
	(20-21)	*(22-23)*	*(24-25)*		*(26-27)*	*(28-29)*	*(30-31)*

NOTE: Read instructions before completing this form.

PARAMETER *(32-37)*		*(3 Card Only)* QUANTITY OR LOADING *(46-53)* AVERAGE	*(54-61)* MAXIMUM	UNITS	*(4 Card Only)* QUALITY OR CONCENTRATION *(38-45)* MINIMUM	*(46-53)* AVERAGE	*(54-61)* MAXIMUM	UNITS	NO. EX *(62-63)*	FREQUENCY OF ANALYSIS *(64-68)*	SAMPLE TYPE *(69-70)*
PH, EFFLUENT	SAMPLE MEASUREMENT				5.8				0	3/7	Grab
000400	PERMIT REQUIREMENT				5.0			SU		3/7	Grab
OIL-GREASE	SAMPLE MEASUREMENT					9.7	51	MG/L	0	3/7	Grab
000550	PERMIT REQUIREMENT					50	100			3/7	Grab
PHENOLS	SAMPLE MEASUREMENT		23.1	LBS/DAY					0	3/7	Grab
032730	PERMIT REQUIREMENT		48.8							1/7	Grab
FLOW RATE	SAMPLE MEASUREMENT	0.021	0.057	MG/day						1/1	inst.
074060	PERMIT REQUIREMENT									1/1	inst.
	SAMPLE MEASUREMENT										
	PERMIT REQUIREMENT										
	SAMPLE MEASUREMENT										
	PERMIT REQUIREMENT										
	SAMPLE MEASUREMENT										
	PERMIT REQUIREMENT										

NAME/TITLE PRINCIPAL EXECUTIVE OFFICER

A. L. Martin
Vice President/Gen. Mgr.

TYPED OR PRINTED

I CERTIFY UNDER PENALTY OF LAW THAT I HAVE PERSONALLY EXAMINED AND AM FAMILIAR WITH THE INFORMATION SUBMITTED HEREIN, AND BASED ON MY INQUIRY OF THOSE INDIVIDUALS IMMEDIATELY RESPONSIBLE FOR OBTAINING THE INFORMATION, I BELIEVE THE SUBMITTED INFORMATION IS TRUE, ACCURATE AND COMPLETE. I AM AWARE THAT THERE ARE SIGNIFICANT PENALTIES FOR SUBMITTING FALSE INFORMATION, INCLUDING THE POSSIBILITY OF FINE AND IMPRISONMENT. SEE 18 USC § 1001 AND 33 USC § 1319. *(Penalties under these statutes may include fines up to $10,000 and/or maximum imprisonment of between 6 months and 5 years.)*

W. R. Lomax

SIGNATURE OF PRINCIPAL EXECUTIVE OFFICER OR AUTHORIZED AGENT

TELEPHONE		DATE		
AREA CODE	NUMBER	YEAR	MO	DAY
601	328-7551	89	10	31

COMMENT AND EXPLANATION OF ANY VIOLATIONS *(Reference all attachments here)*

PERMITTEE NAME/ADDRESS (*Include Facility Name/Location if different*)

NAME Kerr McGee

ADDRESS P.O. Box 906
Columbus, Ms. 39701
1680

FACILITY

LOCATION

NATIONAL POLLUTANT DISCHARGE ELIMINATION SYSTEM (*NPDES*)
DISCHARGE MONITORING REPORT (*DMR*)

Form Approved
OMB No. 2040-0004
Approval expires 12-31-87

(2-16) PERMIT NUMBER: 90021

(17-19) DISCHARGE NUMBER: 001

MONITORING PERIOD

	YEAR	MO	DAY		YEAR	MO	DAY
FROM	88	08	01	TO	88	09	01
	(20-21)	(22-23)	(24-25)		(26-27)	(28-29)	(30-31)

NOTE: Read instructions before completing this form.

PARAMETER (32-37)		(3 Card Only) QUANTITY OR LOADING (46-53) AVERAGE	(54-61) MAXIMUM	UNITS	(4 Card Only) QUALITY OR CONCENTRATION (38-45) MINIMUM	(46-53) AVERAGE	(54-61) MAXIMUM	UNITS	NO. EX (62-63)	FREQUENCY OF ANALYSIS (64-68)	SAMPLE TYPE (69-70)
PH, EFFLUENT 000400	SAMPLE MEASUREMENT	--------	-------	----	4.4	5.29	5.9	SU	3	3/7	grab
	PERMIT REQUIREMENT	-------	-------	----	5.0	----	-------			3/7	grab
[redacted]L-GREASE 000550	SAMPLE MEASUREMENT	XXX 3.01	11.04	lbs/day	0.6	14.41	63	MG/L		3/7	grab
	PERMIT REQUIREMENT	-------			-----	50	100			3/7	grab
ARSENIC, TOTAL 001002	SAMPLE MEASUREMENT			lbs/day				MG/L		1/365	24 hr
	PERMIT REQUIREMENT	-------	.13		-------	------	4			1/365	24 hr
CHROMIUM, TOTAL 001034	SAMPLE MEASUREMENT			lbs/day				MG/L		1/365	24 hr
	PERMIT REQUIREMENT	-------	.13		---------	--------	4			1/365	24 hr
COPPER, TOTAL 001042	SAMPLE MEASUREMENT			lbs/day				MG/L		1/365	24 hr
	PERMIT REQUIREMENT	-------	.17		--------	------	5			1/365	24 hr
[redacted]HENOLS 032730	SAMPLE MEASUREMENT	XXX 19.13	35.31	lbs/day	29	91.14	119	MG/L		3/7	grab
	PERMIT REQUIREMENT	-----	48.8				-------			1/7	grab
FLOW RATE 074060	SAMPLE MEASUREMENT	0.0144	0.0662	MG/day	-------	-----	-------	---		1/1	inst
	PERMIT REQUIREMENT	------	-----		------	-----	----	---		1/1	inst

NAME/TITLE PRINCIPAL EXECUTIVE OFFICER

A.L. Martin
Vice President/Gen'l Mgr.

TYPED OR PRINTED

I CERTIFY UNDER PENALTY OF LAW THAT I HAVE PERSONALLY EXAMINED AND AM FAMILIAR WITH THE INFORMATION SUBMITTED HEREIN AND BASED ON MY INQUIRY OF THOSE INDIVIDUALS IMMEDIATELY RESPONSIBLE FOR OBTAINING THE INFORMATION, I BELIEVE THE SUBMITTED INFORMATION IS TRUE, ACCURATE AND COMPLETE. I AM AWARE THAT THERE ARE SIGNIFICANT PENALTIES FOR SUBMITTING FALSE INFORMATION, INCLUDING THE POSSIBILITY OF FINE AND IMPRISONMENT. SEE 18 U.S.C. § 1001 AND 33 U.S.C. § 1319. *(Penalties under these statutes may include fines up to $10,000 and/or maximum imprisonment of between 6 months and 5 years.)*

SIGNATURE OF PRINCIPAL EXECUTIVE OFFICER OR AUTHORIZED AGENT

TELEPHONE: AREA CODE 601 | NUMBER 328-7551

DATE: YEAR 88 | MO 10 | DAY 25

COMMENT AND EXPLANATION OF ANY VIOLATIONS (*Reference all attachments here*)

Facility Name/Location if different)

NAME KERR McGEE

ADDRESS P.O. Box 906
Columbus, Ms. 39701
1680

FACILITY

LOCATION

NATIONAL POLLUTANT DISCHARGE ELIMINATION SYSTEM (NPDES)
DISCHARGE MONITORING REPORT (DMR)

(2-16) PERMIT NUMBER	(17-19) DISCHARGE NUMBER
90021	001

MONITORING PERIOD

FROM YEAR (20-21)	MO (22-23)	DAY (24-25)	TO YEAR (26-27)	MO (28-29)	DAY (30-31)
88	07	01	88	08	01

RECEIVED
OCT 28 1988
Dept. of Natural Resources
Bureau of Pollution Control

Form Approved
OMB No. 2040-0004
Approval expires 12-31-87

NOTE: Read instructions before completing this form.

PARAMETER (32-37)		(3 Card Only) QUANTITY OR LOADING (46-53) AVERAGE	(54-61) MAXIMUM	UNITS	(4 Card Only) QUALITY OR CONCENTRATION (38-45) MINIMUM	(46-53) AVERAGE	(54-61) MAXIMUM	UNITS	NO. EX (62-63)	FREQUENCY OF ANALYSIS (64-68)	SAMPLE TYPE (69-70)
PH, EFFLUENT	SAMPLE MEASUREMENT	------- ------	--------	----					--	0/7	grab
000400	PERMIT REQUIREMENT	--------	--------	-----	5.0	------	-------	SU		3/7	grab
[redacted]L-GREASE	SAMPLE MEASUREMENT	1.61	6.24		4.7	21.54	65			3/7	grab
000550	PERMIT REQUIREMENT	-----		lbs/day	-------	50	100	MG/L		3/7	grab
ARSENIC, TOTAL	SAMPLE MEASUREMENT									1/365	24 hr
001002	PERMIT REQUIREMENT	----- -----	.13	LBS/DAY	-------	-------	4	MG/L		1/365	24 hr
CHROMIUM, TOTAL	SAMPLE MEASUREMENT				------	--------				1/365	24 hr
001034	PERMIT REQUIREMENT	------	.13	lbs/day	--------	-------	4	MG/L		1/365	24 hr
COPPER, TOTAL	SAMPLE MEASUREMENT									1/365	24 hr
001042	PERMIT REQUIREMENT	-------	.17	lbs/day	--------	------	5	MG/L		1/365	24 hr
[redacted]ENOLS	SAMPLE MEASUREMENT	13.18	22.02		64	91.1	113			3/7	grab
032730	PERMIT REQUIREMENT	------	48.8	lbs/day			------	MG/L		1/7	grab
FLOW RATE	SAMPLE MEASUREMENT	0.0179	0.0259		------	------	-------	---- ----		1/1	inst
074060	PERMIT REQUIREMENT	----	-----	MG/day	-------	------	------			1/1	inst

NAME/TITLE PRINCIPAL EXECUTIVE OFFICER

A.L. Martin
Vice President/Gen'l Mgr.

TYPED OR PRINTED

I CERTIFY UNDER PENALTY OF LAW THAT I HAVE PERSONALLY EXAMINED AND AM FAMILIAR WITH THE INFORMATION SUBMITTED HEREIN AND BASED ON MY INQUIRY OF THOSE INDIVIDUALS IMMEDIATELY RESPONSIBLE FOR OBTAINING THE INFORMATION I BELIEVE THE SUBMITTED INFORMATION IS TRUE ACCURATE AND COMPLETE I AM AWARE THAT THERE ARE SIGNIFICANT PENALTIES FOR SUBMITTING FALSE INFORMATION INCLUDING THE POSSIBILITY OF FINE AND IMPRISONMENT SEE 18 USC § 1001 AND 33 USC § 1319. *(Penalties under these statutes may include fines up to $10,000 and or maximum imprisonment of between 6 months and 5 years.)*

SIGNATURE OF PRINCIPAL EXECUTIVE OFFICER OR AUTHORIZED AGENT

TELEPHONE: AREA CODE 601 | NUMBER 328-7551

DATE: YEAR 88 | MO 10 | DAY 25

COMMENT AND EXPLANATION OF ANY VIOLATIONS *(Reference all attachments here)*

PH not determined

Suspect bad sample on Max. O&G; Possible analytical error

MDP

PERMITTEE NAME/ADDRESS (*Include Facility Name/Location if different*)

NAME KERR McGEE

ADDRESS P.O. Box 906
Columbus MS 39701
1680

FACILITY

LOCATION

NATIONAL POLLUTANT DISCHARGE ELIMINATION SYSTEM (*NPDES*)
DISCHARGE MONITORING REPORT (*DMR*)

Form Approved
OMB No. 2040-0004
Approval expires 12-31-87

(2-16) PERMIT NUMBER	(17-19) DISCHARGE NUMBER
90021	001

TSE

MONITORING PERIOD	YEAR	MO	DAY		YEAR	MO	DAY
FROM	88	06	01	TO	88	07	01
	(20-21)	(22-23)	(24-25)		(26-27)	(28-29)	(30-31)

NOTE: Read instructions before completing this form.

PARAMETER (32-37)		(3 Card Only) QUANTITY OR LOADING (46-53) AVERAGE	(54-61) MAXIMUM	UNITS	(4 Card Only) QUALITY OR CONCENTRATION (38-45) MINIMUM	(46-53) AVERAGE	(54-61) MAXIMUM	UNITS	NO. EX (62-63)	FREQUENCY OF ANALYSIS (64-68)	SAMPLE TYPE (69-70)
PH, EFFLUENT	SAMPLE MEASUREMENT	-----	-----	---	5.28	5.82	6.40	SU		3/7	grab
000400	PERMIT REQUIREMENT	-----	-----	---	5.0	-----	-----			3/7	grab
[redacted]-GREASE	SAMPLE MEASUREMENT	3.51	12.2	LBS/DAY	3.8	21.6	60.0	MG/L		3/7	grab
000550	PERMIT REQUIREMENT	-----	-----		-----	50	100			3/7	grab
ARSENIC, TOTAL	SAMPLE MEASUREMENT	N/A	N/A	LBS/DAY	N/A	N/A	N/A	MG/L		1/365	24 hr.
001002	PERMIT REQUIREMENT	-----	.13		-----	-----	4			1/365	24 hr.
CHROMIUM, TOTAL	SAMPLE MEASUREMENT	N/A	N/A	LBS/DAY	N/A	N/A	N/A	MG/L		1/365	24 hr.
001034	PERMIT REQUIREMENT	-----	.13		-----	-----	4			1/365	24 hr.
COPPER, TOTAL	SAMPLE MEASUREMENT	N/A	N/A	LBS/DAY	N/A	N/A	N/A	MG/L		1/365	24 hr.
001042	PERMIT REQUIREMENT	-----	.17		-----	-----	5			1/365	24 hr.
[redacted]ENOLS	SAMPLE MEASUREMENT	18.1	29.4	LBS/DAY	92.0	101.0	117.0	MG/L		3/7	grab
032730	PERMIT REQUIREMENT	-----	48.8		-----	-----	-----			1/7	grab
FLOW RATE	SAMPLE MEASUREMENT	.0231	.0432	MG/DAY	-----	-----	-----	---		1/1	INST.
074060	PERMIT REQUIREMENT	-----	-----		-----	-----	-----	---		1/1	INST.

NAME/TITLE PRINCIPAL EXECUTIVE OFFICER		TELEPHONE			DATE		
A. L. Martin Vice President/Gen'l Mgr.	I CERTIFY UNDER PENALTY OF LAW THAT I HAVE PERSONALLY EXAMINED AND AM FAMILIAR WITH THE INFORMATION SUBMITTED HEREIN AND BASED ON MY INQUIRY OF THOSE INDIVIDUALS IMMEDIATELY RESPONSIBLE FOR OBTAINING THE INFORMATION, I BELIEVE THE SUBMITTED INFORMATION IS TRUE, ACCURATE AND COMPLETE. I AM AWARE THAT THERE ARE SIGNIFICANT PENALTIES FOR SUBMITTING FALSE INFORMATION, INCLUDING THE POSSIBILITY OF FINE AND IMPRISONMENT. SEE 18 U.S.C. § 1001 AND 33 U.S.C. § 1319. *(Penalties under these statutes may include fines up to $10,000 and/or maximum imprisonment of between 6 months and 5 years.)*	E L Oakmore	601	328-7551	88	08	27
TYPED OR PRINTED		SIGNATURE OF PRINCIPAL EXECUTIVE OFFICER OR AUTHORIZED AGENT	AREA CODE	NUMBER	YEAR	MO	DAY

COMMENT AND EXPLANATION OF ANY VIOLATIONS (*Reference all attachments here*)

PERMITTEE NAME/ADDRESS (*Include Facility Name/Location if different*)

NAME KERR-McGEE

ADDRESS P. O. Box 906
COLUMBUS MS 39701
1680

FACILITY

LOCATION

NATIONAL POLLUTANT DISCHARGE ELIMINATION SYSTEM (*NPDES*)
DISCHARGE MONITORING REPORT (*DMR*)

Form Approved
OMB No. 2040-0004
Approval expires 12-31-87

(2-16) PERMIT NUMBER	(17-19) DISCHARGE NUMBER
90021	001

MONITORING PERIOD	YEAR	MO	DAY		YEAR	MO	DAY
FROM / TO	88 (20-21)	04 (22-23)	01 (24-25)		88 (26-27)	05 (28-29)	01 (30-31)

NOTE: Read instructions before completing this form.

PARAMETER (32-37)		(3 Card Only) QUANTITY OR LOADING (46-53) AVERAGE	(54-61) MAXIMUM	UNITS	(4 Card Only) QUALITY OR CONCENTRATION (38-45) MINIMUM	(46-53) AVERAGE	(54-61) MAXIMUM	UNITS	NO. EX (62-63)	FREQUENCY OF ANALYSIS (64-68)	SAMPLE TYPE (69-70)
PH, EFFLUENT 000400	SAMPLE MEASUREMENT	----	----	---	5.84	5.95	6.11	SU		3/7	GRAB
	PERMIT REQUIREMENT	----	----	---	5.0	----	----			3/7	GRAB
OIL-GREASE 000550	SAMPLE MEASUREMENT	0.60	1.12	LBS./ DAY	1.9	2.7	3.8	MG/L		3/7	GRAB
	PERMIT REQUIREMENT	----	----		----	50	100			3/7	GRAB
ARSENIC, TOTAL 001002	SAMPLE MEASUREMENT	---N/A	N/A	LBS/ DAY	N/A	N/A	N/A	MG/L		1/365	24 hr.
	PERMIT REQUIREMENT	----	.13		----	----	4			1/365	24 hr.
CHROMIUM, TOTAL 001034	SAMPLE MEASUREMENT	N/A	N/A	LBS/ DAY	N/A	N/A	N/A	MG/ L		1/365	24 hr
	PERMIT REQUIREMENT	----	.13		----	----	4			1/365	24 hr.
COPPER, TOTAL 001042	SAMPLE MEASUREMENT	---N/A	N/A	LBS/ DAY	N/A	N/A	N/A	MG/ L		1/365	24 hr.
	PERMIT REQUIREMENT	----	.17		----	----	5			1/365	24 hr.
PHENOLS 032730	SAMPLE MEASUREMENT	27.4	48.6	LBS/ DAY	112	125	135	MG/L		3/7	GRAB
	PERMIT REQUIREMENT	----	48.8		----	----	----			1/7	GRAB
FLOW RATE 074060	SAMPLE MEASUREMENT	.0274	.0432	MG/ DAY	----	----	----	----		1/1	INST.
	PERMIT REQUIREMENT	----	----		----	----	----			1/1/	INST.

NAME/TITLE PRINCIPAL EXECUTIVE OFFICER		TELEPHONE		DATE		
A. L. Martin Vice President/Genl.Mgr.	I CERTIFY UNDER PENALTY OF LAW THAT I HAVE PERSONALLY EXAMINED AND AM FAMILIAR WITH THE INFORMATION SUBMITTED HEREIN AND BASED ON MY INQUIRY OF THOSE INDIVIDUALS IMMEDIATELY RESPONSIBLE FOR OBTAINING THE INFORMATION, I BELIEVE THE SUBMITTED INFORMATION IS TRUE, ACCURATE AND COMPLETE. I AM AWARE THAT THERE ARE SIGNIFICANT PENALTIES FOR SUBMITTING FALSE INFORMATION, INCLUDING THE POSSIBILITY OF FINE AND IMPRISONMENT. SEE 18 USC § 1001 AND 33 USC § 1319. (*Penalties under these statutes may include fines up to $10,000 and or maximum imprisonment of between 6 months and 5 years.*)	E L Creekmore	601	328-7551	88	07	26
TYPED OR PRINTED		SIGNATURE OF PRINCIPAL EXECUTIVE OFFICER OR AUTHORIZED AGENT	AREA CODE	NUMBER	YEAR	MO	DAY

COMMENT AND EXPLANATION OF ANY VIOLATIONS (*Reference all attachments here*)

Facility Name/Location if different)

NAME Kerr-McGee

ADDRESS P. O. Box 906
Columbus, MS 39701
1680

FACILITY

LOCATION

NATIONAL POLLUTANT DISCHARGE ELIMINATION SYSTEM (NPDES)
DISCHARGE MONITORING REPORT (DMR)

Form Approved
OMB No. 2040-0004
Approval expires 12-31-87

(2-16) PERMIT NUMBER	(17-19) DISCHARGE NUMBER
90021	001

MONITORING PERIOD	YEAR	MO	DAY		YEAR	MO	DAY
FROM	88 (20-21)	02 (22-23)	01 (24-25)	TO	88 (26-27)	03 (28-29)	01 (30-31)

NOTE: Read instructions before completing this form.

PARAMETER (32-37)		(3 Card Only) QUANTITY OR LOADING (46-53) AVERAGE	(54-61) MAXIMUM	UNITS	(4 Card Only) QUALITY OR CONCENTRATION (38-45) MINIMUM	(46-53) AVERAGE	(54-61) MAXIMUM	UNITS	NO. EX (62-63)	FREQUENCY OF ANALYSIS (64-68)	SAMPLE TYPE (69-70)
	SAMPLE MEASUREMENT										
	PERMIT REQUIREMENT										
	SAMPLE MEASUREMENT	NO Discharge									
	PERMIT REQUIREMENT										
	SAMPLE MEASUREMENT										
	PERMIT REQUIREMENT										
	SAMPLE MEASUREMENT										
	PERMIT REQUIREMENT										
	SAMPLE MEASUREMENT										
	PERMIT REQUIREMENT										
	SAMPLE MEASUREMENT										
	PERMIT REQUIREMENT										
	SAMPLE MEASUREMENT										
	PERMIT REQUIREMENT										

NAME/TITLE PRINCIPAL EXECUTIVE OFFICER

A. L. Martin
Vice Pres./Gen. Mgr.

TYPED OR PRINTED

I CERTIFY UNDER PENALTY OF LAW THAT I HAVE PERSONALLY EXAMINED AND AM FAMILIAR WITH THE INFORMATION SUBMITTED HEREIN AND BASED ON MY INQUIRY OF THOSE INDIVIDUALS IMMEDIATELY RESPONSIBLE FOR OBTAINING THE INFORMATION, I BELIEVE THE SUBMITTED INFORMATION IS TRUE, ACCURATE AND COMPLETE. I AM AWARE THAT THERE ARE SIGNIFICANT PENALTIES FOR SUBMITTING FALSE INFORMATION, INCLUDING THE POSSIBILITY OF FINE AND IMPRISONMENT. SEE 18 U.S.C. § 1001 AND 33 U.S.C. § 1319. *(Penalties under these statutes may include fines up to $10,000 and/or maximum imprisonment of between 6 months and 5 years.)*

SIGNATURE OF PRINCIPAL EXECUTIVE OFFICER OR AUTHORIZED AGENT

TELEPHONE			DATE		
AREA CODE	NUMBER		YEAR	MO	DAY
405	270-2395		88	04	22

COMMENT AND EXPLANATION OF ANY VIOLATIONS *(Reference all attachments here)*

PERMITTEE NAME/ADDRESS (Include Facility Name/Location if different)

NAME Kerr-Mc Gee Chemical Corp.
ADDRESS Forest Products Division
P. O. Box 906
Columbus, Mississippi 39701
FACILITY 1680 -Forest Products Division
LOCATION Columbus, Mississippi

NATIONAL POLLUTANT DISCHARGE ELIMINATION SYSTEM (NPDES)
DISCHARGE MONITORING REPORT (DMR)

Form Approved
OMB No. 2040-0004
Approval expires 12-31-87

(2-16) PERMIT NUMBER: 90021
(17-19) DISCHARGE NUMBER: 001

MONITORING PERIOD

	YEAR	MO	DAY		YEAR	MO	DAY
FROM	88	03	01	TO	88	04	01
	(20-21)	(22-23)	(24-25)		(26-27)	(28-29)	(30-31)

RECEIVED JUL - 1988 Dept. of Natural Resources Bureau of Pollution Control

NOTE: Read instructions before completing this form.

PARAMETER (32-37)		(3 Card Only) QUANTITY OR LOADING (46-53) AVERAGE	(54-61) MAXIMUM	UNITS	(4 Card Only) QUALITY OR CONCENTRATION (38-45) MINIMUM	(46-53) AVERAGE	(54-61) MAXIMUM	UNITS	NO. EX (62-63)	FREQUENCY OF ANALYSIS (64-68)	SAMPLE TYPE (69-70)
PH, EFFLUENT	SAMPLE MEASUREMENT	-----	-----	----	6.50	6.50	6.50	SU	0	3/7	Grab
	PERMIT REQUIREMENT	-----	-----	----	5.0	-----	-----			3/7	Grab
[redacted]L - GREASE	SAMPLE MEASUREMENT	0.38	0.38	Lbs/Day	32.0	32.0	32.0	MG/L	0	3/7	Grab
	PERMIT REQUIREMENT	-----	-----		-----	50	100			3/7	Grab
ARSENIC, TOTAL	SAMPLE MEASUREMENT	.0009	.0009	Lbs/Day	.075	.075	.075	MG/L	0	1/365	24 hr
	PERMIT REQUIREMENT	-----	.13		-----	-----	4			1/365	24 hr Comp
CHROMIUM, TOTAL	SAMPLE MEASUREMENT	.00004	.00004	Lbs.Day	.003	.003	.003	MG/L	0	1/365	24 hr
	PERMIT REQUIREMENT	-----	.13		-----	-----	4			1/365	24 hr Comp
COPPER, TOTAL	SAMPLE MEASUREMENT	.0002	.0002	Lbs/Day	.017	.017	.017	MG/L	0	1/365	24 hr
	PERMIT REQUIREMENT	-----	.17		-----	-----	5			1/365	24 hr Comp
[redacted]ENOLS	SAMPLE MEASUREMENT	0.35	0.35	Lbs/Day	29.0	29.0	29.0	MG/L	0	3/7	Grab
	PERMIT REQUIREMENT	-----	48.8		-----	-----	-----			3/7	Grab
FLOW RATE	SAMPLE MEASUREMENT	.00144	.00144	MG/Day	-----	-----	-----	---	0	1/1	Inst.
	PERMIT REQUIREMENT	-----	-----		-----	-----	-----	---		1/1	Inst.

NAME/TITLE PRINCIPAL EXECUTIVE OFFICER

A. L. Martin
Vice Pres./Gen. Mgr.

TYPED OR PRINTED

I CERTIFY UNDER PENALTY OF LAW THAT I HAVE PERSONALLY EXAMINED AND AM FAMILIAR WITH THE INFORMATION SUBMITTED HEREIN AND BASED ON MY INQUIRY OF THOSE INDIVIDUALS IMMEDIATELY RESPONSIBLE FOR OBTAINING THE INFORMATION, I BELIEVE THE SUBMITTED INFORMATION IS TRUE, ACCURATE AND COMPLETE. I AM AWARE THAT THERE ARE SIGNIFICANT PENALTIES FOR SUBMITTING FALSE INFORMATION, INCLUDING THE POSSIBILITY OF FINE AND IMPRISONMENT. SEE 18 USC § 1001 AND 33 USC § 1319. *(Penalties under these statutes may include fines up to $10,000 and/or maximum imprisonment of between 6 months and 5 years.)*

SIGNATURE OF PRINCIPAL EXECUTIVE OFFICER OR AUTHORIZED AGENT

TELEPHONE: AREA CODE 601 | NUMBER 328-7551

DATE: YEAR 88 | MO 06 | DAY 28

COMMENT AND EXPLANATION OF ANY VIOLATIONS *(Reference all attachments here)*

Facility Name/Location if different)

NAME Kerr-McGee

ADDRESS P. O. Box 906
Columbus, MS 39701
1680

FACILITY

LOCATION

NATIONAL POLLUTANT DISCHARGE ELIMINATION SYSTEM (NPDES)
DISCHARGE MONITORING REPORT (DMR)

Form Approved
OMB No. 2040-0004
Approval expires 12-31-87

(2-16) PERMIT NUMBER	(17-19) DISCHARGE NUMBER
90021	001

MONITORING PERIOD	YEAR	MO	DAY		YEAR	MO	DAY
FROM	88 (20-21)	01 (22-23)	01 (24-25)	TO	88 (26-27)	02 (28-29)	01 (30-31)

NOTE: Read instructions before completing this form.

PARAMETER (32-37)		(3 Card Only) QUANTITY OR LOADING (46-53) AVERAGE	(54-61) MAXIMUM	UNITS	(4 Card Only) QUALITY OR CONCENTRATION (38-45) MINIMUM	(46-53) AVERAGE	(54-61) MAXIMUM	UNITS	NO. EX (62-63)	FREQUENCY OF ANALYSIS (64-68)	SAMPLE TYPE (69-70)
	SAMPLE MEASUREMENT										
	PERMIT REQUIREMENT										
	SAMPLE MEASUREMENT	No Discharge									
	PERMIT REQUIREMENT										
	SAMPLE MEASUREMENT										
	PERMIT REQUIREMENT										
	SAMPLE MEASUREMENT										
	PERMIT REQUIREMENT										
	SAMPLE MEASUREMENT										
	PERMIT REQUIREMENT										
	SAMPLE MEASUREMENT										
	PERMIT REQUIREMENT										
	SAMPLE MEASUREMENT										
	PERMIT REQUIREMENT										

NAME/TITLE PRINCIPAL EXECUTIVE OFFICER

A. L. Martin
Vice Pres./Gen. Mgr.

TYPED OR PRINTED

I CERTIFY UNDER PENALTY OF LAW THAT I HAVE PERSONALLY EXAMINED AND AM FAMILIAR WITH THE INFORMATION SUBMITTED HEREIN AND BASED ON MY INQUIRY OF THOSE INDIVIDUALS IMMEDIATELY RESPONSIBLE FOR OBTAINING THE INFORMATION, I BELIEVE THE SUBMITTED INFORMATION IS TRUE, ACCURATE AND COMPLETE. I AM AWARE THAT THERE ARE SIGNIFICANT PENALTIES FOR SUBMITTING FALSE INFORMATION, INCLUDING THE POSSIBILITY OF FINE AND IMPRISONMENT. SEE 18 USC § 1001 AND 33 USC § 1319. *(Penalties under these statutes may include fines up to $10,000 and or maximum imprisonment of between 6 months and 5 years.)*

SIGNATURE OF PRINCIPAL EXECUTIVE OFFICER OR AUTHORIZED AGENT

TELEPHONE			DATE		
AREA CODE	NUMBER		YEAR	MO	DAY
405	270-2395		88	04	22

COMMENT AND EXPLANATION OF ANY VIOLATIONS *(Reference all attachments here)*

Facility Name/Location if different)

NAME KERR-MCGEE

ADDRESS P.O. BOX906

COLUMBUS MS 39701

1600

FACILITY

LOCATION

NATIONAL POLLUTANT DISCHARGE ELIMINATION SYSTEM (NPDES)

DISCHARGE MONITORING REPORT (DMR)

Form Approved.
OMB No. 2040-0004
Approval expires 9-30-85

(2-16) PERMIT NUMBER: 20021

(17-19) DISCHARGE NUMBER: 001

IND

1987 WSS

MONITORING PERIOD

FROM YEAR (20-21)	MO (22-23)	DAY (24-25)	TO YEAR (26-27)	MO (28-29)	DAY (30-31)
87	12	01	88	01	01

NOTE: Read instructions before completing this form.

PARAMETER (32-37)		(3 Card Only) QUANTITY OR LOADING (46-53) AVERAGE	(54-61) MAXIMUM	UNITS	(4 Card Only) QUALITY OR CONCENTRATION (38-45) MINIMUM	(46-53) AVERAGE	(54-61) MAXIMUM	UNITS	NO. EX (62-63)	FREQUENCY OF ANALYSIS (64-68)	SAMPLE TYPE (69-70)
PH, EFFLUENT	SAMPLE MEASUREMENT	******	******	******	6.90	8.57	9.49			3/7	GRAB
000400	PERMIT REQUIREMENT	******	******	******	5.0	******	******	SU	***	3/7	GRAB
O&G-GREASE	SAMPLE MEASUREMENT	0.78	1.27		2.6	4.57	6.7			3/7	GRAB
000550	PERMIT REQUIREMENT	******	******	LBS/DA	******	50	100	MG/L	***	3/7	GRAB
ARSENIC, TOTAL	SAMPLE MEASUREMENT	N/A	N/A		N/A	N/A	N/A			1/365	24 hr.
001002	PERMIT REQUIREMENT	******	.13	LBS/DA	******	******	4	MG/L	***	1/365	24HR C
CHROMIUM, TOTAL	SAMPLE MEASUREMENT	N/A	N/A		N/A	N/A	N/A			1/365	24 hr.
001034	PERMIT REQUIREMENT	******	.13	LBS/DA	******	******	4	MG/L	***	1/365	24HR C
COPPER, TOTAL	SAMPLE MEASUREMENT	N/A	N/A		N/A	N/A	N/A			1/365	24 hr.
001042	PERMIT REQUIREMENT	******	.17	LBS/DA	******	******	5	MG/L	***	1/365	24HR C
PHENOLS	SAMPLE MEASUREMENT	5.83	16.55		2.6	40.17	115			3/7	GRAB
032730	PERMIT REQUIREMENT	******	48.8	LBS/DA	******	******	******	MG/L	***	1/7	GRAB
FLOW RATE	SAMPLE MEASUREMENT	0.0245	0.0432		******	******	******	******		1/1	INST
074060	PERMIT REQUIREMENT	******	******	MG/DAY	******	******	******	**********		1/1	INSTAN

NAME/TITLE PRINCIPAL EXECUTIVE OFFICER

A. L. Martin

Vice President/Genl.Mgr.

TYPED OR PRINTED

I CERTIFY UNDER PENALTY OF LAW THAT I HAVE PERSONALLY EXAMINED AND AM FAMILIAR WITH THE INFORMATION SUBMITTED HEREIN AND BASED ON MY INQUIRY OF THOSE INDIVIDUALS IMMEDIATELY RESPONSIBLE FOR OBTAINING THE INFORMATION, I BELIEVE THE SUBMITTED INFORMATION IS TRUE, ACCURATE AND COMPLETE. I AM AWARE THAT THERE ARE SIGNIFICANT PENALTIES FOR SUBMITTING FALSE INFORMATION, INCLUDING THE POSSIBILITY OF FINE AND IMPRISONMENT. SEE 18 USC § 1001 AND 33 USC § 1319. *(Penalties under these statutes may include fines up to $10,000 and or maximum imprisonment of between 6 months and 5 years.)*

E L Cruikmore

SIGNATURE OF PRINCIPAL EXECUTIVE OFFICER OR AUTHORIZED AGENT

TELEPHONE: AREA CODE 601, NUMBER 328-7557

DATE: YEAR 88, MO 01, DAY 25

COMMENT AND EXPLANATION OF ANY VIOLATIONS *(Reference all attachments here)*

Facility Name/Location if different)

NAME KERR-MCGEE

ADDRESS P.O. BOX906

COLUMBUS MS 39701

1680

FACILITY

LOCATION

NATIONAL POLLUTANT DISCHARGE ELIMINATION SYSTEM (NPDES)
DISCHARGE MONITORING REPORT (DMR)

Form Approved.
OMB No. 2040-0004
Approval expires 9-30-85

(2-16) PERMIT NUMBER: 90021

(17-19) DISCHARGE NUMBER: 001

MONITORING PERIOD

	YEAR (20-21)	MO (22-23)	DAY (24-25)		YEAR (26-27)	MO (28-29)	DAY (30-31)
FROM	87	11	01	TO	87	12	01

132 IND WSS

NOTE: Read instructions before completing this form.

PARAMETER (32-37)		(3 Card Only) QUANTITY OR LOADING (46-53) AVERAGE	(54-61) MAXIMUM	UNITS	(4 Card Only) QUALITY OR CONCENTRATION (38-45) MINIMUM	(46-53) AVERAGE	(54-61) MAXIMUM	UNITS	NO. EX (62-63)	FREQUENCY OF ANALYSIS (64-68)	SAMPLE TYPE (69-70)
PH, EFFLUENT	SAMPLE MEASUREMENT	******	******	******	5.14	6.50	9.61			3/7	GRAB
000400		******	******	******							
	PERMIT REQUIREMENT	******	******	******	5.0	******	******	SU	***	3/7	GRAB
OIL-GREASE	SAMPLE MEASUREMENT	0.33	0.92		(0.1	2.69	7.20			3/7	GRA
000550	PERMIT REQUIREMENT	******	******	LBS/DA	******	50	100	MG/L	***	3/7	GRAB
ARSENIC, TOTAL	SAMPLE MEASUREMENT	N/A	N/A		N/A	N/A	N/A			1/365	24 hr.
001002	PERMIT REQUIREMENT	******	.13	LBS/DA	******	******	4	MG/L	***	1/365	24HR C
CHROMIUM, TOTAL	SAMPLE MEASUREMENT	N/A	N/A		N/A	N/A	N/A			1/365	24 hr.
001034	PERMIT REQUIREMENT	******	.13	LBS/DA	******	******	4	MG/L	***	1/365	24HR C
COPPER, TOTAL	SAMPLE MEASUREMENT	N/A	N/A		N/A	N/A	N/A			1/365	24 hr.
001042	PERMIT REQUIREMENT	******	.17	LBS/DA	******	******	5	MG/L	***	1/365	24HR C
PHENOLS	SAMPLE MEASUREMENT	16.70	27.92		0.07	121	189			3/7	GRA
032730	PERMIT REQUIREMENT	******	48.8	LBS/DA	******	******	******	MG/L	***	1/7	GRAB
FLOW RATE	SAMPLE MEASUREMENT	0.0173	0.0432		******	******	******	******		1/1	INST
074060	PERMIT REQUIREMENT	******	******	MG/DAY	******	******	******	*********		1/1	INSTAN

NAME/TITLE PRINCIPAL EXECUTIVE OFFICER

A.L. Martin
Vice President/Genl/Mgr.

TYPED OR PRINTED

I CERTIFY UNDER PENALTY OF LAW THAT I HAVE PERSONALLY EXAMINED AND AM FAMILIAR WITH THE INFORMATION SUBMITTED HEREIN AND BASED ON MY INQUIRY OF THOSE INDIVIDUALS IMMEDIATELY RESPONSIBLE FOR OBTAINING THE INFORMATION, I BELIEVE THE SUBMITTED INFORMATION IS TRUE ACCURATE AND COMPLETE. I AM AWARE THAT THERE ARE SIGNIFICANT PENALTIES FOR SUBMITTING FALSE INFORMATION, INCLUDING THE POSSIBILITY OF FINE AND IMPRISONMENT. SEE 18 U.S.C. § 1001 AND 33 U.S.C. § 1319. *(Penalties under these statutes may include fines up to $10,000 and or maximum imprisonment of between 6 months and 5 years.)*

E L Crukmore

SIGNATURE OF PRINCIPAL EXECUTIVE OFFICER OR AUTHORIZED AGENT

TELEPHONE: AREA CODE 601, NUMBER 328-7557

DATE: YEAR 88, MO 01, DAY 25

COMMENT AND EXPLANATION OF ANY VIOLATIONS *(Reference all attachments here)*

Facility Name/Location if different)

NAME KERR-MCGEE

ADDRESS P.O. BOX906

COLUMBUS MS 39701

1580

FACILITY

LOCATION

NATIONAL POLLUTANT DISCHARGE ELIMINATION SYSTEM (NPDES)

DISCHARGE MONITORING REPORT (DMR)

Form Approved.
OMB No. 2040-0004
Approval expires 9-30-85

(2-16) PERMIT NUMBER: 90021

(17-19) DISCHARGE NUMBER: 001

MONITORING PERIOD

	YEAR	MO	DAY		YEAR	MO	DAY
FROM	87	10	01	TO	87	11	01
	(20-21)	(22-23)	(24-25)		(26-27)	(28-29)	(30-31)

IND WSS

NOTE: Read instructions before completing this form.

PARAMETER (32-37)		(3 Card Only) QUANTITY OR LOADING (46-53) AVERAGE	(54-61) MAXIMUM	UNITS	(4 Card Only) QUALITY OR CONCENTRATION (38-45) MINIMUM	(46-53) AVERAGE	(54-61) MAXIMUM	UNITS	NO. EX (62-63)	FREQUENCY OF ANALYSIS (64-68)	SAMPLE TYPE (69-70)
PH, EFFLUENT	SAMPLE MEASUREMENT	******	******	******	5.19	6.14	7.45			3/7	GRAB
000400	PERMIT REQUIREMENT	******	******	******	5.0	******	******	SU	***	3/7	GRAB
OIL-GREASE	SAMPLE MEASUREMENT	0.50	1.43		(0.1	4.95	17.0			3/7	GRAB
000550	PERMIT REQUIREMENT	******	******	LBS/DA	******	50	100	MG/L	***	3/7	GRAB
ARSENIC, TOTAL	SAMPLE MEASUREMENT	N/A	N/A		N/A	N/A	N/A			1/365	24 hr.
001002	PERMIT REQUIREMENT	******	.13	LBS/DA	******	******	4	MG/L	***	1/365	24HR C
CHROMIUM, TOTAL	SAMPLE MEASUREMENT	N/A	N/A		N/A	N/A	N/A			1/365	24 hr.
001034	PERMIT REQUIREMENT	******	.13	LBS/DA	******	******	4	MG/L	***	1/365	24HR C
COPPER, TOTAL	SAMPLE MEASUREMENT	N/A	N/A		N/A	N/A	N/A			1/365	24 hr.
001042	PERMIT REQUIREMENT	******	.17	LBS/DA	******	******	5	MG/L	***	1/365	24HR C
PHENOLS	SAMPLE MEASUREMENT	16.91	40.38		3.15	161	261			3/7	GRAB
032730	PERMIT REQUIREMENT	******	48.8	LBS/DA	******	******	******	MG/L	***	1/7	GRAB
FLOW RATE	SAMPLE MEASUREMENT	0.0130	0.0245		******	******	******	******		1/1	INST
074060	PERMIT REQUIREMENT	******	******	MG/DAY	******	******	******	******	***	1/1	INSTAN

NAME/TITLE PRINCIPAL EXECUTIVE OFFICER

A. L. Martin
Vice President/Genl/Mgr.

TYPED OR PRINTED

I CERTIFY UNDER PENALTY OF LAW THAT I HAVE PERSONALLY EXAMINED AND AM FAMILIAR WITH THE INFORMATION SUBMITTED HEREIN AND BASED ON MY INQUIRY OF THOSE INDIVIDUALS IMMEDIATELY RESPONSIBLE FOR OBTAINING THE INFORMATION, I BELIEVE THE SUBMITTED INFORMATION IS TRUE, ACCURATE AND COMPLETE. I AM AWARE THAT THERE ARE SIGNIFICANT PENALTIES FOR SUBMITTING FALSE INFORMATION, INCLUDING THE POSSIBILITY OF FINE AND IMPRISONMENT. SEE 18 USC § 1001 AND 33 USC § 1319. *(Penalties under these statutes may include fines up to $10,000 and or maximum imprisonment of between 6 months and 5 years.)*

E L Cruthirds

SIGNATURE OF PRINCIPAL EXECUTIVE OFFICER OR AUTHORIZED AGENT

TELEPHONE		DATE		
AREA CODE	NUMBER	YEAR	MO	DAY
601	328-7537	88	01	25

COMMENT AND EXPLANATION OF ANY VIOLATIONS *(Reference all attachments here)*

PERMITTEE NAME/ADDRESS (Include Facility Name/Location if different)

NAME KERR-MCGEE

ADDRESS P.O. BOX906

COLUMBUS MS 39701

1680

FACILITY

LOCATION

NATIONAL POLLUTANT DISCHARGE ELIMINATION SYSTEM (NPDES)
DISCHARGE MONITORING REPORT (DMR)

Form Approved.
OMB No. 2040-0004
Approval expires 9-30-85

(2-16) PERMIT NUMBER: 90021

(17-19) DISCHARGE NUMBER: 001

IND WSS

MONITORING PERIOD

	YEAR (20-21)	MO (22-23)	DAY (24-25)		YEAR (26-27)	MO (28-29)	DAY (30-31)
FROM	87	09	01	TO	87	10	01

NOTE: Read instructions before completing this form.

PARAMETER (32-37)		(3 Card Only) QUANTITY OR LOADING (46-53) AVERAGE	(54-61) MAXIMUM	UNITS	(4 Card Only) QUALITY OR CONCENTRATION (38-45) MINIMUM	(46-53) AVERAGE	(54-61) MAXIMUM	UNITS	NO. EX (62-63)	FREQUENCY OF ANALYSIS (64-68)	SAMPLE TYPE (69-70)
PH, EFFLUENT	SAMPLE MEASUREMENT	******	******	******	6.01	6.96	9.91			3/7	GRAB
000400		******	******	******							
	PERMIT REQUIREMENT	******	******	******	5.0	******	******	SU	0	3/7	GRAB
OIL-GREASE	SAMPLE MEASUREMENT	0.43	2.65		0.1	3.58	9.2			3/7	GRAB
00550	PERMIT REQUIREMENT	******	******	LBS/DA	******	50	100	MG/L	0	3/7	GRAB
ARSENIC, TOTAL	SAMPLE MEASUREMENT	N/A	N/A		N/A	N/A	N/A			1/365	24 hr.
001002	PERMIT REQUIREMENT	******	.13	LBS/DA	******	******	4	MG/L	0	1/365	24HR C
CHROMIUM, TOTAL	SAMPLE MEASUREMENT	N/A	N/A		N/A	N/A	N/A			1/365	24 hr.
001034	PERMIT REQUIREMENT	******	.13	LBS/DA	******	******	4	MG/L	0	1/365	24HR C
COPPER, TOTAL	SAMPLE MEASUREMENT	N/A	N/A		N/A	N/A	N/A			1/365	24 hr.
001042	PERMIT REQUIREMENT	******	.17	LBS/DA	******	******	5	MG/L	0	1/365	24HR C
PHENOLS	SAMPLE MEASUREMENT	12.81	44.05		34	135.56	222			3/7	GRAB*
00730	PERMIT REQUIREMENT	******	48.8	LBS/DA	******	******	******	MG/L	0	1/7	GRAB
FLOW RATE	SAMPLE MEASUREMENT	0.0058	0.0346		****** ******	****** ******	****** ******	****** ******		1/1	INST.
074060	PERMIT REQUIREMENT	******	******	MG/DAY	******	******	******	******		1/1	INSTAN

NAME/TITLE PRINCIPAL EXECUTIVE OFFICER

A. L. Martin

TYPED OR PRINTED

I CERTIFY UNDER PENALTY OF LAW THAT I HAVE PERSONALLY EXAMINED AND AM FAMILIAR WITH THE INFORMATION SUBMITTED HEREIN AND BASED ON MY INQUIRY OF THOSE INDIVIDUALS IMMEDIATELY RESPONSIBLE FOR OBTAINING THE INFORMATION, I BELIEVE THE SUBMITTED INFORMATION IS TRUE, ACCURATE AND COMPLETE. I AM AWARE THAT THERE ARE SIGNIFICANT PENALTIES FOR SUBMITTING FALSE INFORMATION, INCLUDING THE POSSIBILITY OF FINE AND IMPRISONMENT. SEE 18 USC § 1001 AND 33 USC § 1319. *(Penalties under these statutes may include fines up to $10,000 and or maximum imprisonment of between 6 months and 5 years.)*

E.L. Cruikmore

SIGNATURE OF PRINCIPAL EXECUTIVE OFFICER OR AUTHORIZED AGENT

TELEPHONE: AREA CODE 601 NUMBER 328-7551

DATE: YEAR 87 MO 10 DAY 21

COMMENT AND EXPLANATION OF ANY VIOLATIONS *(Reference all attachments here)*

* Frequency of Analysis changed from one/weekly to three/weekly effective 9/14/87

PERMITTEE NAME/ADDRESS (Include Facility Name/Location if different)

NAME KERR-MCGEE

ADDRESS P.O. BOX 906

COLUMBUS MS 39701

1680

FACILITY

LOCATION

NATIONAL POLLUTANT DISCHARGE ELIMINATION SYSTEM (NPDES)

DISCHARGE MONITORING REPORT (DMR)

Form Approved.
OMB No. 2040-0004
Approval expires 9-30-85

(2-16) PERMIT NUMBER: 0021

(17-19) DISCHARGE NUMBER: 001

IND WSS

MONITORING PERIOD

	YEAR (20-21)	MO (22-23)	DAY (24-25)		YEAR (26-27)	MO (28-29)	DAY (30-31)
FROM	87	08	01	TO	87	09	01

NOTE: Read instructions before completing this form.

PARAMETER (32-37)		(3 Card Only) QUANTITY OR LOADING (46-53) AVERAGE	(54-61) MAXIMUM	UNITS	(4 Card Only) QUALITY OR CONCENTRATION (38-45) MINIMUM	(46-53) AVERAGE	(54-61) MAXIMUM	UNITS	NO. EX (62-63)	FREQUENCY OF ANALYSIS (64-68)	SAMPLE TYPE (69-70)
PH, EFFLUENT	SAMPLE MEASUREMENT	******	******	******	5.06	5.34	6.38		0	3/7	GRAB
000400	PERMIT REQUIREMENT	******	******	******	5.0	******	******	SU	***	3/7	GRAB
OIL-GREASE	SAMPLE MEASUREMENT	0.61	2.63		1.0	7.43	19.4		0	3/7	GRAB
00550	PERMIT REQUIREMENT	******	******	LBS/DA	******	50	100	MG/L	***	3/7	GRAB
ARSENIC, TOTAL	SAMPLE MEASUREMENT	0.001	0.001		0.003	0.003	0.003		0	1/365	24 hr.
001002	PERMIT REQUIREMENT	******	.13	LBS/DA	******	******	4	MG/L	***	1/365	24HR C
CHROMIUM, TOTAL	SAMPLE MEASUREMENT	<0.004	<0.004		<0.01	<0.01	<0.01		0	1/365	24 hr
001034	PERMIT REQUIREMENT	******	.13	LBS/DA	******	******	4	MG/L	***	1/365	24HR C
COPPER, TOTAL	SAMPLE MEASUREMENT	0.01	0.01		0.03	0.03	0.03		0	1/365	24 hr.
001042	PERMIT REQUIREMENT	******	.17	LBS/DA	******	******	5	MG/L	***	1/365	24HR C
PHENOLS	SAMPLE MEASUREMENT	23.02	114.07		73	177.33	327		1	1/7	GRAB
00730	PERMIT REQUIREMENT	******	48.8	LBS/DA	******	******	******	MG/L	***	1/7	GRAB
FLOW RATE	SAMPLE MEASUREMENT	0.0086	0.0432		******	******	******	******		1/1	INST.
074060	PERMIT REQUIREMENT	******	******	MG/DAY	******	******	******	******	***	1/1	INSTAN

NAME/TITLE PRINCIPAL EXECUTIVE OFFICER

A. L. Martin

TYPED OR PRINTED

I CERTIFY UNDER PENALTY OF LAW THAT I HAVE PERSONALLY EXAMINED AND AM FAMILIAR WITH THE INFORMATION SUBMITTED HEREIN AND BASED ON MY INQUIRY OF THOSE INDIVIDUALS IMMEDIATELY RESPONSIBLE FOR OBTAINING THE INFORMATION, I BELIEVE THE SUBMITTED INFORMATION IS TRUE, ACCURATE AND COMPLETE. I AM AWARE THAT THERE ARE SIGNIFICANT PENALTIES FOR SUBMITTING FALSE INFORMATION, INCLUDING THE POSSIBILITY OF FINE AND IMPRISONMENT. SEE 18 USC § 1001 AND 33 USC § 1319. (Penalties under these statutes may include fines up to $10,000 and or maximum imprisonment of between 6 months and 5 years.)

E. L. Cruikmore

SIGNATURE OF PRINCIPAL EXECUTIVE OFFICER OR AUTHORIZED AGENT

TELEPHONE: AREA CODE 601 | NUMBER 328-7551

DATE: YEAR 87 | MO 10 | DAY 21

COMMENT AND EXPLANATION OF ANY VIOLATIONS (Reference all attachments here)

See attached letter

PERMITTEE NAME/ADDRESS (Include Facility Name/Location if different)

NAME KERR-MCGEE

ADDRESS P.O. BOX 906

COLUMBUS MS 39701

1680

FACILITY

LOCATION

RECEIVED
OCT 27 1987
Dept. of Natural Resources
Bureau of Pollution Control

NATIONAL POLLUTANT DISCHARGE ELIMINATION SYSTEM (NPDES)
DISCHARGE MONITORING REPORT (DMR)

Form Approved.
OMB No. 2040-0004
Approval expires 9-30-85

(2-16) PERMIT NUMBER: 90021

(17-19) DISCHARGE NUMBER: 001

IND WSS

MONITORING PERIOD

	YEAR	MO	DAY
FROM (20-27)	87	07	01
TO (26-27)	87	08	01

NOTE: Read instructions before completing this form.

PARAMETER (32-37)		(3 Card Only) QUANTITY OR LOADING (46-53) AVERAGE	(54-61) MAXIMUM	UNITS	(4 Card Only) QUALITY OR CONCENTRATION (38-45) MINIMUM	(46-53) AVERAGE	(54-61) MAXIMUM	UNITS	NO. EX (62-63)	FREQUENCY OF ANALYSIS (64-68)	SAMPLE TYPE (69-70)
PH, EFFLUENT	SAMPLE MEASUREMENT	****** ******	****** ******	****** ******	5.63	6.74	9.64	SU	0	3/7	GRAB
000400	PERMIT REQUIREMENT	******	******	******	5.0	******	******	SU	***	3/7	GRAB
OIL-GREASE	SAMPLE MEASUREMENT	0.21	0.86		0.7	5.72	34.8		0	3/7	GRAB
00550	PERMIT REQUIREMENT	******	******	LBS/DA	******	50	100	MG/L	***	3/7	GRAB
ARSENIC, TOTAL	SAMPLE MEASUREMENT	N/A	N/A		N/A	N/A	N/A		0	1/365	24 hr.
001002	PERMIT REQUIREMENT	******	.13	LBS/DA	******	******	4	MG/L	***	1/365	24HR C
CHROMIUM, TOTAL	SAMPLE MEASUREMENT	N/A	N/A		N/A	N/A	N/A		0	1/365	24 hr.
001034	PERMIT REQUIREMENT	******	.13	LBS/DA	******	******	4	MG/L	***	1/365	24HR C
COPPER, TOTAL	SAMPLE MEASUREMENT	N/A	N/A		N/A	N/A	N/A		0	1/365	24 hr.
001042	PERMIT REQUIREMENT	******	.17	LBS/DA	******	******	5	MG/L	***	1/365	24HR C
PHENOLS	SAMPLE MEASUREMENT	6.88	18.46		160	186.75	237		0	1/7	GRAB
00730	PERMIT REQUIREMENT	******	48.8	LBS/DA	******	******	******	MG/L	***	1/7	GRAB
FLOW RATE	SAMPLE MEASUREMENT	0.0058	0.0432		****** ******	****** ******	****** ******	****** ******		1/1	INST.
074060	PERMIT REQUIREMENT	******	******	MG/DAY	******	******	******	******	***	1/1	INSTAN

NAME/TITLE PRINCIPAL EXECUTIVE OFFICER

A. L. Martin

TYPED OR PRINTED

I CERTIFY UNDER PENALTY OF LAW THAT I HAVE PERSONALLY EXAMINED AND AM FAMILIAR WITH THE INFORMATION SUBMITTED HEREIN AND BASED ON MY INQUIRY OF THOSE INDIVIDUALS IMMEDIATELY RESPONSIBLE FOR OBTAINING THE INFORMATION, I BELIEVE THE SUBMITTED INFORMATION IS TRUE, ACCURATE AND COMPLETE. I AM AWARE THAT THERE ARE SIGNIFICANT PENALTIES FOR SUBMITTING FALSE INFORMATION, INCLUDING THE POSSIBILITY OF FINE AND IMPRISONMENT. SEE 18 USC § 1001 AND 33 USC § 1319. *(Penalties under these statutes may include fines up to $10,000 and/or maximum imprisonment of between 6 months and 5 years.)*

E. L. Creekmore

SIGNATURE OF PRINCIPAL EXECUTIVE OFFICER OR AUTHORIZED AGENT

TELEPHONE: AREA CODE 601 NUMBER 328-7551

DATE: YEAR 87 MO 10 DAY 21.

COMMENT AND EXPLANATION OF ANY VIOLATIONS *(Reference all attachments here)*

PERMITTEE NAME/ADDRESS (Include Facility Name/Location if different)

NAME KERR-MCGEE

ADDRESS P.O. BOX 906

COLUMBUS MS 39701

1690

FACILITY

LOCATION

NATIONAL POLLUTANT DISCHARGE ELIMINATION SYSTEM (NPDES)

DISCHARGE MONITORING REPORT (DMR)

Form Approved.
OMB No. 2040-0004
Approval expires 9-30-85

(2-16) PERMIT NUMBER: 90021

(17-19) DISCHARGE NUMBER: 001

MONITORING PERIOD

FROM YEAR (20-21)	MO (22-23)	DAY (24-25)	TO YEAR (26-27)	MO (28-29)	DAY (30-31)
87	06	01	87	07	01

IND WSS

NOTE: Read instructions before completing this form.

PARAMETER (32-37)		(3 Card Only) QUANTITY OR LOADING (46-53) AVERAGE	(54-61) MAXIMUM	UNITS	(4 Card Only) QUALITY OR CONCENTRATION (38-45) MINIMUM	(46-53) AVERAGE	(54-61) MAXIMUM	UNITS	NO. EX (62-63)	FREQUENCY OF ANALYSIS (64-68)	SAMPLE TYPE (69-70)
PH, EFFLUENT	SAMPLE MEASUREMENT	******	******	******	5.07	7.17	10.51		O	3/7	grab
000400	PERMIT REQUIREMENT	******	******	******	5.0	******	******	SU	**	3/7	GRAB
OIL-GREASE	SAMPLE MEASUREMENT	0.51	2.02		< 0.1	3.91	14.0		O	3/7	grab
000550	PERMIT REQUIREMENT	******	******	LBS/DA	******	50	100	MG/L	**	3/7	GRAB
ARSENIC, TOTAL	SAMPLE MEASUREMENT	N/A	N/A		N/A	N/A	N/A			1/365	24 hr.
001002	PERMIT REQUIREMENT	******	.13	LBS/DA	******	******	4	MG/L	**	1/365	24HR C(
CHROMIUM, TOTAL	SAMPLE MEASUREMENT	N/A	N/A		N/A	N/A	N/A			1/365	24 hr.
001034	PERMIT REQUIREMENT	******	.13	LBS/DA	******	******	4	MG/L	**	1/365	24HR C(
COPPER, TOTAL	SAMPLE MEASUREMENT	N/A	N/A		N/A	N/A	N/A			1/365	24 hr.
001042	PERMIT REQUIREMENT	******	.17	LBS/DA	******	******	5	MG/L	**	1/365	24HR C(
PHENOLS	SAMPLE MEASUREMENT	16.34	34.26		54.0	167.5	238.0		O	1/7	grab
032730	PERMIT REQUIREMENT	******	48.8	LBS/DA	******	******	******	MG/L	**	1/7	GRAB
FLOW RATE	SAMPLE MEASUREMENT	0.0130	0.0245		******	******	******	******		1/1	INST.
074060	PERMIT REQUIREMENT	******	******	MG/DAY	******	******	******	******	**	1/1	INSTAN

NAME/TITLE PRINCIPAL EXECUTIVE OFFICER

A.L. Martin

TYPED OR PRINTED

I CERTIFY UNDER PENALTY OF LAW THAT I HAVE PERSONALLY EXAMINED AND AM FAMILIAR WITH THE INFORMATION SUBMITTED HEREIN AND BASED ON MY INQUIRY OF THOSE INDIVIDUALS IMMEDIATELY RESPONSIBLE FOR OBTAINING THE INFORMATION, I BELIEVE THE SUBMITTED INFORMATION IS TRUE, ACCURATE AND COMPLETE. I AM AWARE THAT THERE ARE SIGNIFICANT PENALTIES FOR SUBMITTING FALSE INFORMATION, INCLUDING THE POSSIBILITY OF FINE AND IMPRISONMENT. SEE 18 USC § 1001 AND 33 USC § 1319. *(Penalties under these statutes may include fines up to $10,000 and/or maximum imprisonment of between 6 months and 5 years.)*

E.L. Cruckmore

SIGNATURE OF PRINCIPAL EXECUTIVE OFFICER OR AUTHORIZED AGENT

TELEPHONE: AREA CODE 601 NUMBER 3287551

DATE: YEAR 87 MO 07 DAY 20

COMMENT AND EXPLANATION OF ANY VIOLATIONS *(Reference all attachments here)*

PERMITTEE NAME/ADDRESS (*Include Facility Name/Location if different*)

NAME KERR-MCGEE

ADDRESS P.O. BOX906

COLUMBUS MS 39701

1680

FACILITY

LOCATION

NATIONAL POLLUTANT DISCHARGE ELIMINATION SYSTEM (*NPDES*)

DISCHARGE MONITORING REPORT (*DMR*)

Form Approved. OMB No. 2040-0004 Approval expires 9-30-85

(2-16) PERMIT NUMBER	(17-19) DISCHARGE NUMBER
90021	001

IND WSS

MONITORING PERIOD

	YEAR (20-21)	MO (22-23)	DAY (24-25)		YEAR (26-27)	MO (28-29)	DAY (30-31)
FROM	87	05	01	TO	87	06	01

NOTE: Read instructions before completing this form.

PARAMETER (32-37)		(3 Card Only) QUANTITY OR LOADING (46-53) AVERAGE	(54-61) MAXIMUM	UNITS	(4 Card Only) QUALITY OR CONCENTRATION (38-45) MINIMUM	(46-53) AVERAGE	(54-61) MAXIMUM	UNITS	NO. EX (62-63)	FREQUENCY OF ANALYSIS (64-68)	SAMPLE TYPE (69-70)
PH, EFFLUENT	SAMPLE MEASUREMENT	******	******	******	5.54	6.85	10.22		O	3/7	grab
000400	PERMIT REQUIREMENT	******	******	******	5.0	******	******	SU	***	3/7	GRAB
OIL & GREASE	SAMPLE MEASUREMENT	0.18	0.57		< 0.1	1.98	7.9		O	3/7	grab
000550	PERMIT REQUIREMENT	******	******	LBS/DA	******	50	100	MG/L	***	3/7	GRAB
ARSENIC, TOTAL	SAMPLE MEASUREMENT	N/A	N/A		N/A	N/A	N/A		—	1/365	24 hr.
001002	PERMIT REQUIREMENT	******	.13	LBS/DA	******	******	4	MG/L	***	1/365	24HR C
CHROMIUM, TOTAL	SAMPLE MEASUREMENT	N/A	N/A		N/A	N/A	N/A		—	1/365	24 hr.
001034	PERMIT REQUIREMENT	******	.13	LBS/DA	******	******	4	MG/L	***	1/365	24HR C
COPPER, TOTAL	SAMPLE MEASUREMENT	N/A	N/A		N/A	N/A	N/A		—	1/365	24 hr.
001042	PERMIT REQUIREMENT	******	.17	LBS/DA	******	******	5	MG/L	***	1/365	24HR C
PHENOLS	SAMPLE MEASUREMENT	9.41	19.11		11.0	81.8	177.0		O	1/7	grab
032730	PERMIT REQUIREMENT	******	48.8	LBS/DA	******	******	******	MG/L	***	1/7	GRAB
FLOW RATE	SAMPLE MEASUREMENT	0.0130	0.0245		****** ******	****** ******	****** ******	****** ******		1/1	INST.
074060	PERMIT REQUIREMENT	******	******	MG/DAY	******	******	******	**********		1/1	INSTAN

NAME/TITLE PRINCIPAL EXECUTIVE OFFICER			TELEPHONE		DATE		
A.L. Martin	I CERTIFY UNDER PENALTY OF LAW THAT I HAVE PERSONALLY EXAMINED AND AM FAMILIAR WITH THE INFORMATION SUBMITTED HEREIN, AND BASED ON MY INQUIRY OF THOSE INDIVIDUALS IMMEDIATELY RESPONSIBLE FOR OBTAINING THE INFORMATION, I BELIEVE THE SUBMITTED INFORMATION IS TRUE, ACCURATE AND COMPLETE. I AM AWARE THAT THERE ARE SIGNIFICANT PENALTIES FOR SUBMITTING FALSE INFORMATION, INCLUDING THE POSSIBILITY OF FINE AND IMPRISONMENT. SEE 18 USC § 1001 AND 33 USC § 1319. *(Penalties under these statutes may include fines up to $10,000 and/or maximum imprisonment of between 6 months and 5 years.)*	E.L. Creekmore	601	3287551	87	07	20
TYPED OR PRINTED		SIGNATURE OF PRINCIPAL EXECUTIVE OFFICER OR AUTHORIZED AGENT	AREA CODE	NUMBER	YEAR	MO	DAY

COMMENT AND EXPLANATION OF ANY VIOLATIONS (*Reference all attachments here*)

(Name /Location if different)

NAME KERR-MCGEE

ADDRESS P.O. BOX906

COLUMBUS MS 39701

1630

FACILITY

LOCATION

Lowndes

RECEIVED
JUL 30 1987
Dept. of Natural Resources
Bureau of Pollution Control

NATIONAL POLLUTANT DISCHARGE ELIMINATION SYSTEM (NPDES)

DISCHARGE MONITORING REPORT (DMR)

Form Approved.
OMB No. 2040-0004
Approval expires 9-30-85

(2-16) PERMIT NUMBER: 30021

(17-19) DISCHARGE NUMBER: 001

IND JAR WSS

MONITORING PERIOD

	YEAR (20-21)	MO (22-23)	DAY (24-25)		YEAR (26-27)	MO (28-29)	DAY (30-31)
FROM	87	04	01	TO	87	05	01

NOTE: Read instructions before completing this form.

PARAMETER (32-37)		(3 Card Only) QUANTITY OR LOADING (46-53) AVERAGE	(54-61) MAXIMUM	UNITS	(4 Card Only) QUALITY OR CONCENTRATION (38-45) MINIMUM	(46-53) AVERAGE	(54-61) MAXIMUM	UNITS	NO. EX (62-63)	FREQUENCY OF ANALYSIS (64-68)	SAMPLE TYPE (69-70)
PH, EFFLUENT	SAMPLE MEASUREMENT	******	******	******	5.64	7.08	10.31		O	3/7	grab
000400	PERMIT REQUIREMENT	******	******	******	5.0	******	******	SU	***	3/7	GRAB
OIL-GREASE	SAMPLE MEASUREMENT	1.22	4.58		1.7	7.74	25.0		O	3/7	grab
000550	PERMIT REQUIREMENT	******	******	LBS/DA	******	50	100	MG/L	***	3/7	GRAB
ARSENIC, TOTAL	SAMPLE MEASUREMENT	N/A	N/A		N/A	N/A	N/A		—	1/365	24 hr.
001002	PERMIT REQUIREMENT	******	.13	LBS/DA	******	******	4	MG/L	***	1/365	24HR C
CHROMIUM, TOTAL	SAMPLE MEASUREMENT	n/A	N/A		N/A	N/A	N/A		—	1/365	24 hr.
001034	PERMIT REQUIREMENT	******	.13	LBS/DA	******	******	4	MG/L	***	1/365	24HR C
COPPER, TOTAL	SAMPLE MEASUREMENT	N/A	N/A		N/A	N/A	N/A		—	1/365	24 hr.
001042	PERMIT REQUIREMENT	******	.17	LBS/DA	******	******	5	MG/L	***	1/365	24HR C
PHENOLS	SAMPLE MEASUREMENT	20.44	34.26		1.09	99.02	168		O	1/7	grab
032730	PERMIT REQUIREMENT	******	48.8	LBS/DA	******	******	******	MG/L	***	1/7	GRAB
FLOW RATE	SAMPLE MEASUREMENT	0.0130	0.0346		******	******	******	******		1/1	INST.
074060	PERMIT REQUIREMENT	******	******	MG/DAY	******	******	******	******	***	1/1	INSTAN

NAME/TITLE PRINCIPAL EXECUTIVE OFFICER

A.L. Martin

TYPED OR PRINTED

I CERTIFY UNDER PENALTY OF LAW THAT I HAVE PERSONALLY EXAMINED AND AM FAMILIAR WITH THE INFORMATION SUBMITTED HEREIN. AND BASED ON MY INQUIRY OF THOSE INDIVIDUALS IMMEDIATELY RESPONSIBLE FOR OBTAINING THE INFORMATION, I BELIEVE THE SUBMITTED INFORMATION IS TRUE ACCURATE AND COMPLETE. I AM AWARE THAT THERE ARE SIGNIFICANT PENALTIES FOR SUBMITTING FALSE INFORMATION, INCLUDING THE POSSIBILITY OF FINE AND IMPRISONMENT SEE 18 USC § 1001 AND 33 USC § 1319. *(Penalties under these statutes may include fines up to $10,000 and or maximum imprisonment of between 6 months and 5 years.)*

E.L. Creekmore

SIGNATURE OF PRINCIPAL EXECUTIVE OFFICER OR AUTHORIZED AGENT

TELEPHONE: AREA CODE 601 | NUMBER 3287551

DATE: YEAR 87 | MO 07 | DAY 20

COMMENT AND EXPLANATION OF ANY VIOLATIONS *(Reference all attachments here)*

PERMITTEE NAME/ADDRESS (*Include Facility Name/Location if different*)

NAME KERR-MCGEE

ADDRESS P.O. BOX906

COLUMBUS MS 39701

1580

FACILITY

LOCATION

NATIONAL POLLUTANT DISCHARGE ELIMINATION SYSTEM (*NPDES*)
DISCHARGE MONITORING REPORT (*DMR*)

Form Approved. OMB No. 2040-0004 Approval expires 9-30-85

(2-16) PERMIT NUMBER: 90021

(17-19) DISCHARGE NUMBER: 001

MONITORING PERIOD (20-21 YEAR, 22-23 MO, 24-25 DAY)

FROM YEAR 87 MO 03 DAY 01 TO YEAR 87 MO 04 DAY 01 (26-27, 28-29, 30-31)

IND WSS

NOTE: Read instructions before completing this form.

PARAMETER (32-37)		(3 Card Only) QUANTITY OR LOADING (46-53) AVERAGE	(54-61) MAXIMUM	UNITS	(4 Card Only) QUALITY OR CONCENTRATION (38-45) MINIMUM	(46-53) AVERAGE	(54-61) MAXIMUM	UNITS	NO. EX (62-63)	FREQUENCY OF ANALYSIS (64-68)	SAMPLE TYPE (69-70)
PH, EFFLUENT	SAMPLE MEASUREMENT	******	******	******	5.02	6.38	9.74			3/7	grab
00400		******	******	******							
	PERMIT REQUIREMENT	******	******	******	5.0	******	******	SU	***	3/7	GRAB
[redacted]-GREASE	SAMPLE MEASUREMENT	0.56	2.27		<0.1	5.4	21.0			3/7	grab
00550	PERMIT REQUIREMENT	******	******	LBS/DA	******	50	100	MG/L	***	3/7	GRAB
ARSENIC, TOTAL	SAMPLE MEASUREMENT	<.0005	<.0005		<0.003	<0.003	<0.003			1/365	24hr.
01002	PERMIT REQUIREMENT	******	.13	LBS/DA	******	******	4	MG/L	***	1/365	24HR COMP
CHROMIUM, TOTAL	SAMPLE MEASUREMENT	0.002	0.002		0.01	0.01	0.01			1/365	24hr.
01034	PERMIT REQUIREMENT	******	.13	LBS/DA	******	******	4	MG/L	***	1/365	24HR COMP
COPPER, TOTAL	SAMPLE MEASUREMENT	0.005	0.005		0.03	0.03	0.03			1/365	24hr.
01042	PERMIT REQUIREMENT	******	.17	LBS/DA	******	******	5	MG/L	***	1/365	24HR COMP
PHENOLS	SAMPLE MEASUREMENT	7.1	27.6		0.58	49.2	192.0			1/7	grab
[redacted]30	PERMIT REQUIREMENT	******	48.8	LBS/DA	******	******	******	MG/L	***	1/7	GRAB
FLOW RATE	SAMPLE MEASUREMENT	0.0130	0.0245		******	******	******	******		1/1	instant
74060	PERMIT REQUIREMENT	******	******	MG/DAY	******	******	******	******	***	1/1	INSTANT

NAME/TITLE PRINCIPAL EXECUTIVE OFFICER

P.L. MARTIN V.P.

TYPED OR PRINTED

I CERTIFY UNDER PENALTY OF LAW THAT I HAVE PERSONALLY EXAMINED AND AM FAMILIAR WITH THE INFORMATION SUBMITTED HEREIN AND BASED ON MY INQUIRY OF THOSE INDIVIDUALS IMMEDIATELY RESPONSIBLE FOR OBTAINING THE INFORMATION I BELIEVE THE SUBMITTED INFORMATION IS TRUE, ACCURATE AND COMPLETE I AM AWARE THAT THERE ARE SIGNIFICANT PENALTIES FOR SUBMITTING FALSE INFORMATION, INCLUDING THE POSSIBILITY OF FINE AND IMPRISONMENT SEE 18 USC § 1001 AND 33 USC § 1319 (*Penalties under these statutes may include fines up to $10,000 and/or maximum imprisonment of between 6 months and 5 years.*)

SIGNATURE OF PRINCIPAL EXECUTIVE OFFICER OR AUTHORIZED AGENT

TELEPHONE: AREA CODE 405, NUMBER 270-7325

DATE: YEAR 87 MO 04 DAY 01

COMMENT AND EXPLANATION OF ANY VIOLATIONS (*Reference all attachments here*)

PERMITTEE NAME/ADDRESS (Include Facility Name/Location if different)

NAME KERR-MCGEE

ADDRESS P.O. BOX906

COLUMBUS MS 39701

1530

FACILITY

LOCATION

NATIONAL POLLUTANT DISCHARGE ELIMINATION SYSTEM (NPDES)
DISCHARGE MONITORING REPORT (DMR)

Form Approved.
OMB No. 2040-0004
Approval expires 9-30-85

(2-16) PERMIT NUMBER: 90021

(17-19) DISCHARGE NUMBER: 001

MONITORING PERIOD

	YEAR	MO	DAY		YEAR	MO	DAY
FROM	87	02	01	TO	87	03	01
	(20-21)	(22-23)	(24-25)		(26-27)	(28-29)	(30-31)

IND WSS

NOTE: Read instructions before completing this form.

PARAMETER (32-37)		(3 Card Only) QUANTITY OR LOADING (46-53) AVERAGE	(54-61) MAXIMUM	UNITS	(4 Card Only) QUALITY OR CONCENTRATION (38-45) MINIMUM	(46-53) AVERAGE	(54-61) MAXIMUM	UNITS	NO. EX (62-63)	FREQUENCY OF ANALYSIS (64-68)	SAMPLE TYPE (69-70)
PH, EFFLUENT	SAMPLE MEASUREMENT	******	******	******	5.09	5.72	6.91			3/7	grab
00400	PERMIT REQUIREMENT	******	******	******	5.0	******	******	SU	***	3/7	GRAB
O&G-GREASE	SAMPLE MEASUREMENT	0.75	13.0		0.6	5.5	13.0			3/7	grab
00550	PERMIT REQUIREMENT	******	******	LBS/DA	******	50	100	MG/L	***	3/7	GRAB
ARSENIC, TOTAL	SAMPLE MEASUREMENT	N/A	N/A		N/A	N/A	N/A			1/365	24hr.
01002	PERMIT REQUIREMENT	******	.13	LBS/DA	******	******	4	MG/L	***	1/365	24HR COMP
CHROMIUM, TOTAL	SAMPLE MEASUREMENT	N/A	N/A		N/A	N/A	N/A			1/365	24hr.
01034	PERMIT REQUIREMENT	******	.13	LBS/DA	******	******	4	MG/L	***	1/365	24HR COMP
COPPER, TOTAL	SAMPLE MEASUREMENT	N/A	N/A		N/A	N/A	N/A			1/365	24hr.
01042	PERMIT REQUIREMENT	******	.17	LBS/DA	******	******	5	MG/L	***	1/365	24HR COMP
PHENOLS	SAMPLE MEASUREMENT	23.25	33.68		141.0	231.3	284.0			1/7	grab
0[illegible]730	PERMIT REQUIREMENT	******	48.8	LBS/DA	******	******	******	MG/L	***	1/7	GRAB
FLOW RATE	SAMPLE MEASUREMENT	0.0130	0.0432		******	******	******	******		1/1	instant
74060	PERMIT REQUIREMENT	******	******	MG/DAY	******	******	******	******	***	1/1	INSTANT

NAME/TITLE PRINCIPAL EXECUTIVE OFFICER

A.L. MARTIN V.P.

TYPED OR PRINTED

I CERTIFY UNDER PENALTY OF LAW THAT I HAVE PERSONALLY EXAMINED AND AM FAMILIAR WITH THE INFORMATION SUBMITTED HEREIN AND BASED ON MY INQUIRY OF THOSE INDIVIDUALS IMMEDIATELY RESPONSIBLE FOR OBTAINING THE INFORMATION, I BELIEVE THE SUBMITTED INFORMATION IS TRUE, ACCURATE AND COMPLETE. I AM AWARE THAT THERE ARE SIGNIFICANT PENALTIES FOR SUBMITTING FALSE INFORMATION, INCLUDING THE POSSIBILITY OF FINE AND IMPRISONMENT. SEE 18 USC § 1001 AND 33 USC § 1319 (Penalties under these statutes may include fines up to $10,000 and/or maximum imprisonment of between 6 months and 5 years.)

SIGNATURE OF PRINCIPAL EXECUTIVE OFFICER OR AUTHORIZED AGENT

TELEPHONE: AREA CODE 405, NUMBER 220-7385

DATE: YEAR 87, MO 03, DAY 01

COMMENT AND EXPLANATION OF ANY VIOLATIONS (Reference all attachments here)

EPA Form 3320-1 (Rev. 10-79) PREVIOUS EDITION TO BE USED UNTIL SUPPLY IS EXHAUSTED (REPLACES EPA FORM T-40 WHICH MAY NOT BE USED.)

PERMITTEE NAME/ADDRESS (Include Facility Name/Location if different)
NAME KERR-MCGEE
ADDRESS P.O. BOX906
COLUMBUS MS 39701
1530
FACILITY
LOCATION

RECEIVED
APR 30 1987
DEPT. OF NATURAL RESOURCE
BUREAU OF POLLUTION CONTROL

NATIONAL POLLUTANT DISCHARGE ELIMINATION SYSTEM (NPDES)
DISCHARGE MONITORING REPORT (DMR)

Form Approved.
OMB No. 2040-0004
Approval expires 9-30-85

(2-16) PERMIT NUMBER: 90021
(17-19) DISCHARGE NUMBER: 001

IND WSS

MONITORING PERIOD

	YEAR	MO	DAY		YEAR	MO	DAY
FROM	87	01	01	TO	87	02	01
	(20-21)	(22-23)	(24-25)		(26-27)	(28-29)	(30-31)

NOTE: Read instructions before completing this form.

PARAMETER (32-37)		(4 Card Only) QUANTITY OR LOADING (46-53) AVERAGE	(54-61) MAXIMUM	UNITS	(4 Card Only) QUALITY OR CONCENTRATION (38-45) MINIMUM	(46-53) AVERAGE	(54-61) MAXIMUM	UNITS	NO. EX (62-63)	FREQUENCY OF ANALYSIS (64-68)	SAMPLE TYPE (69-70)
PH, EFFLUENT	SAMPLE MEASUREMENT	******	******	******	5.65	6.44	6.87		0	3/7	grab
00400		******	******	******							
	PERMIT REQUIREMENT	******	******	******	5.0	******	******	SU	***	3/7	GRAB
[redacted]-GREASE	SAMPLE MEASUREMENT	3.59	7.99		1.9	17.3	56.0		0	3/7	grab
00550	PERMIT REQUIREMENT	******	******	LBS/DA	******	50	100	MG/L	***	3/7	GRAB
ARSENIC, TOTAL	SAMPLE MEASUREMENT	N/A	N/A		N/A	N/A	N/A		0	1/365	24hr.
01002	PERMIT REQUIREMENT	******	.13	LBS/DA	******	******	4	MG/L	***	1/365	24HR COMP
CHROMIUM, TOTAL	SAMPLE MEASUREMENT	N/A	N/A		N/A	N/A	N/A		0	1/365	24hr.
01034	PERMIT REQUIREMENT	******	.13	LBS/DA	******	******	4	MG/L	***	1/365	24HR COMP
COPPER, TOTAL	SAMPLE MEASUREMENT	N/A	N/A		N/A	N/A	N/A		0	1/365	24hr.
01042	PERMIT REQUIREMENT	******	.17	LBS/DA	******	******	5	MG/L	***	1/365	24HR COMP
PHENOLS	SAMPLE MEASUREMENT	12.9	46.09		26.0	76.4	226.0		0	1/7	grab
03730	PERMIT REQUIREMENT	******	48.8	LBS/DA	******	******	******	MG/L	***	1/7	GRAB
FLOW RATE	SAMPLE MEASUREMENT	0.0173	0.0533		******	******	******	******	0	1/1	instant
74060	PERMIT REQUIREMENT	******	******	MG/DAY	******	******	******	******	***	1/1	INSTANT

NAME/TITLE PRINCIPAL EXECUTIVE OFFICER
A.L. MARTIN V.P.
TYPED OR PRINTED

I CERTIFY UNDER PENALTY OF LAW THAT I HAVE PERSONALLY EXAMINED AND AM FAMILIAR WITH THE INFORMATION SUBMITTED HEREIN AND BASED ON MY INQUIRY OF THOSE INDIVIDUALS IMMEDIATELY RESPONSIBLE FOR OBTAINING THE INFORMATION, I BELIEVE THE SUBMITTED INFORMATION IS TRUE, ACCURATE AND COMPLETE. I AM AWARE THAT THERE ARE SIGNIFICANT PENALTIES FOR SUBMITTING FALSE INFORMATION, INCLUDING THE POSSIBILITY OF FINE AND IMPRISONMENT. SEE 18 USC § 1001 AND 33 USC § 1319 (Penalties under these statutes may include fines up to $10,000 and/or maximum imprisonment of between 6 months and 5 years.)

SIGNATURE OF PRINCIPAL EXECUTIVE OFFICER OR AUTHORIZED AGENT

TELEPHONE: AREA CODE 405, NUMBER 270-7395

DATE: YEAR 87, MO 02, DAY 01

COMMENT AND EXPLANATION OF ANY VIOLATIONS (Reference all attachments here)

PERMITTEE NAME/ADDRESS (*Include Facility Name/Location if different*)
NAME KERR-MCGEE
ADDRESS P.O. BOX906
COLUMBUS MS 39701
1680
FACILITY
LOCATION

NATIONAL POLLUTANT DISCHARGE ELIMINATION SYSTEM (*NPDES*)
DISCHARGE MONITORING REPORT (*DMR*)

Form Approved.
OMB No. 2040-0004
Approval expires 9-30-85

(2-16) PERMIT NUMBER: 90021
(17-19) DISCHARGE NUMBER: 001

IND 1986 WSS

MONITORING PERIOD

	YEAR	MO	DAY		YEAR	MO	DAY
FROM	86	12	01	TO	87	01	01
	(20-21)	(22-23)	(24-25)		(26-27)	(28-29)	(30-31)

NOTE: Read instructions before completing this form.

PARAMETER (32-37)		(3 Card Only) QUANTITY OR LOADING (46-53) AVERAGE	(54-61) MAXIMUM	UNITS	(4 Card Only) QUALITY OR CONCENTRATION (38-45) MINIMUM	(46-53) AVERAGE	(54-61) MAXIMUM	UNITS	NO. EX (62-63)	FREQUENCY OF ANALYSIS (64-68)	SAMPLE TYPE (69-70)
PH, EFFLUENT	SAMPLE MEASUREMENT	******	******	******	6.36	6.78	7.90			3/7	grab
00400	PERMIT REQUIREMENT	******	******	******	5.0	******	******	SU	***	3/7	GRAB
[redacted]GREASE	SAMPLE MEASUREMENT	1.23	10.6		<0.1	8.5	23.9			3/7	grab
00550	PERMIT REQUIREMENT	******	******	LBS/DA	******	50	100	MG/L	***	3/7	GRAB
ARSENIC, TOTAL	SAMPLE MEASUREMENT	N/A	N/A		N/A	N/A	N/A			1/365	24 HR
01002	PERMIT REQUIREMENT	******	.13	LBS/DA	******	******	4	MG/L	***	1/365	24HR CC
CHROMIUM, TOTAL	SAMPLE MEASUREMENT	N/A	N/A		N/A	N/A	N/A			1/365	24 HR
01034	PERMIT REQUIREMENT	******	.13	LBS/DA	******	******	4	MG/L	***	1/365	24HR CC
COPPER, TOTAL	SAMPLE MEASUREMENT	N/A	N/A		N/A	N/A	N/A			1/365	24 HR
01042	PERMIT REQUIREMENT	******	.17	LBS/DA	******	******	5	MG/L	***	1/365	24HR CC
PH[redacted]OLS	SAMPLE MEASUREMENT	8.7	29.7		53.0	60.5	67.0			1/7	grab
32730	PERMIT REQUIREMENT	******	48.8	LBS/DA	******	******	******	MG/L	***	1/7	GRAB
FLOW RATE	SAMPLE MEASUREMENT	.0173	.0533		******	******	******	******		1/1	Instnt
74060	PERMIT REQUIREMENT	******	******	MG/DAY	******	******	******	******	***	1/1	INSTAN

NAME/TITLE PRINCIPAL EXECUTIVE OFFICER		TELEPHONE		DATE		
A.L. MARTIN V.P.	I CERTIFY UNDER PENALTY OF LAW THAT I HAVE PERSONALLY EXAMINED AND AM FAMILIAR WITH THE INFORMATION SUBMITTED HEREIN AND BASED ON MY INQUIRY OF THOSE INDIVIDUALS IMMEDIATELY RESPONSIBLE FOR OBTAINING THE INFORMATION, I BELIEVE THE SUBMITTED INFORMATION IS TRUE, ACCURATE AND COMPLETE. I AM AWARE THAT THERE ARE SIGNIFICANT PENALTIES FOR SUBMITTING FALSE INFORMATION, INCLUDING THE POSSIBILITY OF FINE AND IMPRISONMENT. SEE 18 USC § 1001 AND 33 USC § 1319. (*Penalties under these statutes may include fines up to $10,000 and/or maximum imprisonment of between 6 months and 5 years.*)	For B.W. Bisseau	405 220-7325	87	01	01
TYPED OR PRINTED		SIGNATURE OF PRINCIPAL EXECUTIVE OFFICER OR AUTHORIZED AGENT	AREA CODE / NUMBER	YEAR	MO	DAY

COMMENT AND EXPLANATION OF ANY VIOLATIONS (*Reference all attachments here*)

PERMITTEE NAME/ADDRESS (*Include Facility Name/Location if different*)

NAME KERR-MCGEE

ADDRESS P.O. BOX906

COLUMBUS MS 39701

1680

FACILITY

LOCATION

NATIONAL POLLUTANT DISCHARGE ELIMINATION SYSTEM (*NPDES*)
DISCHARGE MONITORING REPORT (*DMR*)

Form Approved. OMB No. 2040-0004 Approval expires 9-30-86

(2-16) PERMIT NUMBER: 90021

(17-19) DISCHARGE NUMBER: 001

MONITORING PERIOD	YEAR	MO	DAY		YEAR	MO	DAY
FROM	86	11	01	TO	86	12	01
	(20-21)	(22-23)	(24-25)		(26-27)	(28-29)	(30-31)

IND WSS

NOTE: Read instructions before completing this form.

PARAMETER (32-37)		(3 Card Only) QUANTITY OR LOADING (46-53) AVERAGE	(54-61) MAXIMUM	UNITS	(4 Card Only) QUALITY OR CONCENTRATION (38-45) MINIMUM	(46-53) AVERAGE	(54-61) MAXIMUM	UNITS	NO. EX (62-63)	FREQUENCY OF ANALYSIS (64-68)	SAMPLE TYPE (69-70)
PH, EFFLUENT	SAMPLE MEASUREMENT	****** ******	****** ******	****** ******	6.2	8.0	9.5			3/7	grab
000400	PERMIT REQUIREMENT	******	******	******	5.0	******	******	SU	***	3/7	GRAB
O[redacted]GREASE	SAMPLE MEASUREMENT	0.6	2.6		3.2	7.8	17.9			3/7	grab
000550	PERMIT REQUIREMENT	******	******	LBS/DA	******	50	100	MG/L	***	3/7	GRAB
ARSENIC, TOTAL	SAMPLE MEASUREMENT	N/A	N/A		N/A	N/A	N/A			1/365	24 HR
001002	PERMIT REQUIREMENT	******	.13	LBS/DA	******	******	4	MG/L	***	1/365	24HR CO
CHROMIUM, TOTAL	SAMPLE MEASUREMENT	N/A	N/A		N/A	N/A	N/A			1/365	24 HR
001034	PERMIT REQUIREMENT	******	.13	LBS/DA	******	******	4	MG/L	***	1/365	24HR CO
COPPER, TOTAL	SAMPLE MEASUREMENT	N/A	N/A		N/A	N/A	N/A			1/365	24 HR
001042	PERMIT REQUIREMENT	******	.17	LBS/DA	******	******	5	MG/L	***	1/365	24HR CO
PH[redacted]OLS	SAMPLE MEASUREMENT	1.6	10.2		3.2	22.7	71.0			1/7	grab
032730	PERMIT REQUIREMENT	******	48.8	LBS/DA	******	******	******	MG/L	***	1/7	GRAB
FLOW RATE	SAMPLE MEASUREMENT	.0086	.0173		****** ******	****** ******	****** ******	****** ******		1/1	inst
074060	PERMIT REQUIREMENT	******	******	MG/DAY	******	******	******	**********		1/1	INSTANT

NAME/TITLE PRINCIPAL EXECUTIVE OFFICER			TELEPHONE		DATE		
A.L. MARTIN V.P.	I CERTIFY UNDER PENALTY OF LAW THAT I HAVE PERSONALLY EXAMINED AND AM FAMILIAR WITH THE INFORMATION SUBMITTED HEREIN AND BASED ON MY INQUIRY OF THOSE INDIVIDUALS IMMEDIATELY RESPONSIBLE FOR OBTAINING THE INFORMATION, I BELIEVE THE SUBMITTED INFORMATION IS TRUE, ACCURATE AND COMPLETE. I AM AWARE THAT THERE ARE SIGNIFICANT PENALTIES FOR SUBMITTING FALSE INFORMATION, INCLUDING THE POSSIBILITY OF FINE AND IMPRISONMENT SEE 18 U.S.C. § 1001 AND 33 U.S.C. § 1319. *(Penalties under these statutes may include fines up to $10,000 and/or maximum imprisonment of between 6 months and 5 years.)*	For B.W. Boisseau	405 272 2395		86	12	01
TYPED OR PRINTED		SIGNATURE OF PRINCIPAL EXECUTIVE OFFICER OR AUTHORIZED AGENT	AREA CODE	NUMBER	YEAR	MO	DAY

COMMENT AND EXPLANATION OF ANY VIOLATIONS (*Reference all attachments here*)

PERMITTEE NAME/ADDRESS (*Include Facility Name/Location if different*)
NAME KERR-MCGEE
ADDRESS P.O. BOX906
COLUMBUS MS 39701
1680
FACILITY
LOCATION

NATIONAL POLLUTANT DISCHARGE ELIMINATION SYSTEM (*NPDES*)
DISCHARGE MONITORING REPORT (*DMR*)

Form Approved.
OMB No. 2040-0004
Approval expires 9-30-85

(2-16) PERMIT NUMBER: 90021
(17-19) DISCHARGE NUMBER: 001

IND

WSS
WSS

MONITORING PERIOD

	YEAR	MO	DAY		YEAR	MO	DAY
FROM	86	10	01	TO	86	11	01
	(20-21)	(22-23)	(24-25)		(26-27)	(28-29)	(30-31)

NOTE: Read instructions before completing this form.

PARAMETER (32-37)		(3 Card Only) QUANTITY OR LOADING (46-53) AVERAGE	(54-61) MAXIMUM	UNITS	(4 Card Only) QUALITY OR CONCENTRATION (38-45) MINIMUM	(46-53) AVERAGE	(54-61) MAXIMUM	UNITS	NO. EX (62-63)	FREQUENCY OF ANALYSIS (64-68)	SAMPLE TYPE (69-70)
PH, EFFLUENT	SAMPLE MEASUREMENT	******	******	******	6.2	7.5	10.2			3/7	grab
00400	PERMIT REQUIREMENT	******	******	******	5.0	******	******	SU	***	3/7	GRAB
O[redacted]GREASE	SAMPLE MEASUREMENT	1.8 [redacted]	24.2		<0.1	12.5	54.6			3/7	grab
00550	PERMIT REQUIREMENT	******	******	LBS/DA	******	50	100	MG/L	***	3/7	GRAB
ARSENIC, TOTAL	SAMPLE MEASUREMENT	N/A	N/A		N/A	N/A	N/A			1/365	24HR comp
01002	PERMIT REQUIREMENT	******	.13	LBS/DA	******	******	4	MG/L	***	1/365	24HR CO
CHROMIUM, TOTAL	SAMPLE MEASUREMENT	N/A	N/A		N/A	N/A	N/A			1/365	24HR comp
01034	PERMIT REQUIREMENT	******	.13	LBS/DA	******	******	4	MG/L	***	1/365	24HR CO
COPPER, TOTAL	SAMPLE MEASUREMENT	N/A	N/A		N/A	N/A	N/A			1/365	24HR comp
01042	PERMIT REQUIREMENT	******	.17	LBS/DA	******	******	5	MG/L	***	1/365	24HR CO
P[redacted]OLS	SAMPLE MEASUREMENT	5.0	28.0		0.92	350	63.0			1/7	grab
32730	PERMIT REQUIREMENT	******	48.8	LBS/DA	******	******	******	MG/L	***	1/7	GRAB
FLOW RATE	SAMPLE MEASUREMENT	.0173	.0533		******	******	******	******		1/1	instant
74060	PERMIT REQUIREMENT	******	******	MG/DAY	******	******	******	******	***	1/1	INSTANT

NAME/TITLE PRINCIPAL EXECUTIVE OFFICER
A.L. MARTIN
V.P.
TYPED OR PRINTED

I CERTIFY UNDER PENALTY OF LAW THAT I HAVE PERSONALLY EXAMINED AND AM FAMILIAR WITH THE INFORMATION SUBMITTED HEREIN AND BASED ON MY INQUIRY OF THOSE INDIVIDUALS IMMEDIATELY RESPONSIBLE FOR OBTAINING THE INFORMATION, I BELIEVE THE SUBMITTED INFORMATION IS TRUE, ACCURATE AND COMPLETE. I AM AWARE THAT THERE ARE SIGNIFICANT PENALTIES FOR SUBMITTING FALSE INFORMATION, INCLUDING THE POSSIBILITY OF FINE AND IMPRISONMENT. SEE 18 USC § 1001 AND 33 USC § 1319. (*Penalties under these statutes may include fines up to $10,000 and/or maximum imprisonment of between 6 months and 5 years.*)

for B.W. Boisseau
SIGNATURE OF PRINCIPAL EXECUTIVE OFFICER OR AUTHORIZED AGENT

TELEPHONE: AREA CODE 405 — NUMBER 372-2395

DATE: YEAR 86 — MO 11 — DAY 01

COMMENT AND EXPLANATION OF ANY VIOLATIONS (*Reference all attachments here*)

PERMITTEE NAME/ADDRESS (*Include Facility Name/Location if different*)

NAME KERR-MCGEE

ADDRESS P.O. BOX906

COLUMBUS MS 39701

1680

FACILITY

LOCATION

NATIONAL POLLUTANT DISCHARGE ELIMINATION SYSTEM (*NPDES*)

DISCHARGE MONITORING REPORT (*DMR*)

Form Approved. OMB No. 2040-0004 Approval expires 9-30-86

(2-16) PERMIT NUMBER: 90021

(17-19) DISCHARGE NUMBER: 001

IND WSS

MONITORING PERIOD

	YEAR (20-21)	MO (22-23)	DAY (24-25)		YEAR (26-27)	MO (28-29)	DAY (30-31)
FROM	86	09	01	TO	86	10	01

NOTE: Read instructions before completing this form.

PARAMETER (32-37)		(3 Card Only) QUANTITY OR LOADING (46-53) AVERAGE	(54-61) MAXIMUM	UNITS	(4 Card Only) QUALITY OR CONCENTRATION (38-45) MINIMUM	(46-53) AVERAGE	(54-61) MAXIMUM	UNITS	NO. EX (62-63)	FREQUENCY OF ANALYSIS (64-68)	SAMPLE TYPE (69-70)
PH, EFFLUENT	SAMPLE MEASUREMENT	****** ******	****** ******	****** ******	6.7	7.8	9.9		0	3/7	grab
000400	PERMIT REQUIREMENT	******	******	******	5.0	******	******	SU	***	3/7	GRAB
O[redacted]-GREASE	SAMPLE MEASUREMENT	~~0.96~~ 1.03	~~2.33~~ 4.6		<0.1	5.1	12.9		0	3/7	grab
000550	PERMIT REQUIREMENT	******	******	LBS/DA	******	50	100	MG/L	***	3/7	GRAB
ARSENIC, TOTAL	SAMPLE MEASUREMENT	N/A	N/A		N/A	N/A	N/A		0	1/365	24 HR
001002	PERMIT REQUIREMENT	******	.13	LBS/DA	******	******	4	MG/L	***	1/365	24HR CO
CHROMIUM, TOTAL	SAMPLE MEASUREMENT	N/A	N/A		N/A	N/A	N/A		0	1/365	24 HR
001034	PERMIT REQUIREMENT	******	.13	LBS/DA	******	******	4	MG/L	***	1/365	24HR CO
COPPER, TOTAL	SAMPLE MEASUREMENT	N/A	N/A		N/A	N/A	N/A		0	1/365	24 HR
001042	PERMIT REQUIREMENT	******	.17	LBS/DA	******	******	5	MG/L	***	1/365	24HR CO
P[redacted]OLS	SAMPLE MEASUREMENT	12.7	~~20.2~~ 39.0		27	62.3	109		0	1/7	grab
032730	PERMIT REQUIREMENT	******	48.8	LBS/DA	******	******	******	MG/L	***	1/7	GRAB
FLOW RATE	SAMPLE MEASUREMENT	.0245	.0432		****** ******	****** ******	****** ******	****** ******	0	1/1	instant
074060	PERMIT REQUIREMENT	******	******	MG/DAY	******	******	******	**********		1/1	INSTANT

NAME/TITLE PRINCIPAL EXECUTIVE OFFICER

~~R.P. Michel Director Plant Operations~~ A.L. Martin V-Pres.

TYPED OR PRINTED

I CERTIFY UNDER PENALTY OF LAW THAT I HAVE PERSONALLY EXAMINED AND AM FAMILIAR WITH THE INFORMATION SUBMITTED HEREIN, AND BASED ON MY INQUIRY OF THOSE INDIVIDUALS IMMEDIATELY RESPONSIBLE FOR OBTAINING THE INFORMATION, I BELIEVE THE SUBMITTED INFORMATION IS TRUE, ACCURATE AND COMPLETE. I AM AWARE THAT THERE ARE SIGNIFICANT PENALTIES FOR SUBMITTING FALSE INFORMATION, INCLUDING THE POSSIBILITY OF FINE AND IMPRISONMENT. SEE 18 U.S.C. § 1001 AND 33 U.S.C. § 1319. (*Penalties under these statutes may include fines up to $10,000 and/or maximum imprisonment of between 6 months and 5 years.*)

SIGNATURE OF PRINCIPAL EXECUTIVE OFFICER OR AUTHORIZED AGENT

TELEPHONE: AREA CODE 405, NUMBER 270-2345

DATE: YEAR 86, MO 10, DAY 01

COMMENT AND EXPLANATION OF ANY VIOLATIONS (*Reference all attachments here*)

PERMITTEE NAME/ADDRESS (*Include Facility Name/Location if different*)
NAME KERR-MCGEE
ADDRESS P.O. BOX906
COLUMBUS MS 39701
1680
FACILITY
LOCATION

NATIONAL POLLUTANT DISCHARGE ELIMINATION SYSTEM (*NPDES*)
DISCHARGE MONITORING REPORT (*DMR*)

Form Approved.
OMB No. 2040-0004
Approval expires 9-30-85

(2-16) PERMIT NUMBER: 90021
(17-19) DISCHARGE NUMBER: 001

MONITORING PERIOD

	YEAR	MO	DAY		YEAR	MO	DAY
FROM	86	08	01	TO	86	09	01
	(20-21)	(22-23)	(24-25)		(26-27)	(28-29)	(30-31)

IND WSS

NOTE: Read instructions before completing this form.

PARAMETER (32-37)		(3 Card Only) QUANTITY OR LOADING (46-53) AVERAGE	(54-61) MAXIMUM	UNITS	(4 Card Only) QUALITY OR CONCENTRATION (38-45) MINIMUM	(46-53) AVERAGE	(54-61) MAXIMUM	UNITS	NO. EX (62-63)	FREQUENCY OF ANALYSIS (64-68)	SAMPLE TYPE (69-70)
PH, EFFLUENT	SAMPLE MEASUREMENT	******	******	******	6.6	9.1	10.9		0	3/1	grab
000400	PERMIT REQUIREMENT	******	******	******	5.0	******	******	SU	***	3/7	GRAB
O[illegible]GREASE	SAMPLE MEASUREMENT	0.46	~~1.73~~ 3.2		<0.1	4.9	11.1		0	3/1	grab
000550	PERMIT REQUIREMENT	******	******	LBS/DA	******	50	100	MG/L	***	3/7	GRAB
ARSENIC, TOTAL	SAMPLE MEASUREMENT	<0.0009	<0.0009		<0.003	<0.003	<0.003		0	1/365	24/HR
001002	PERMIT REQUIREMENT	******	.13	LBS/DA	******	******	4	MG/L	***	1/365	24HR C(
CHROMIUM, TOTAL	SAMPLE MEASUREMENT	<0.002	<0.002		<0.01	<0.01	<0.01		0	1/365	24/HR
001034	PERMIT REQUIREMENT	******	.13	LBS/DA	******	******	4	MG/L	***	1/365	24HR C(
COPPER, TOTAL	SAMPLE MEASUREMENT	0.02	0.02		0.09	0.09	0.09		0	1/365	24/HR
001042	PERMIT REQUIREMENT	******	.17	LBS/DA	******	******	5	MG/L	***	1/365	24HR C(
PH[illegible]OLS	SAMPLE MEASUREMENT	2.7	~~13.8~~ 14.6		0.37	24.9	51.0		0	1/1	grab
032730	PERMIT REQUIREMENT	******	48.8	LBS/DA	******	******	******	MG/L	***	1/7	GRAB
FLOW RATE	SAMPLE MEASUREMENT	.0130	.0346		******	******	******	******	0	1/1	~~grab~~ inst
074060	PERMIT REQUIREMENT	******	******	MG/DAY	******	******	******	******	***	1/1	INSTAN

NAME/TITLE PRINCIPAL EXECUTIVE OFFICER
~~R.P. Michel Director Plant Operations~~ A.L. Martin V-Pres.
TYPED OR PRINTED

I CERTIFY UNDER PENALTY OF LAW THAT I HAVE PERSONALLY EXAMINED AND AM FAMILIAR WITH THE INFORMATION SUBMITTED HEREIN; AND BASED ON MY INQUIRY OF THOSE INDIVIDUALS IMMEDIATELY RESPONSIBLE FOR OBTAINING THE INFORMATION, I BELIEVE THE SUBMITTED INFORMATION IS TRUE, ACCURATE AND COMPLETE. I AM AWARE THAT THERE ARE SIGNIFICANT PENALTIES FOR SUBMITTING FALSE INFORMATION, INCLUDING THE POSSIBILITY OF FINE AND IMPRISONMENT. SEE 18 U.S.C. § 1001 AND 33 U.S.C. § 1319. (*Penalties under these statutes may include fines up to $10,000 and/or maximum imprisonment of between 6 months and 5 years.*)

SIGNATURE OF PRINCIPAL EXECUTIVE OFFICER OR AUTHORIZED AGENT

TELEPHONE: AREA CODE 601 NUMBER 270-2345

DATE: YEAR 86 MO 09 DAY 01

COMMENT AND EXPLANATION OF ANY VIOLATIONS (*Reference all attachments here*)

PERMITTEE NAME/ADDRESS (*Include Facility Name/Location if different*)
NAME KERR-MCGEE
ADDRESS P.O. BOX906
COLUMBUS MS 39701
1680
FACILITY
LOCATION

RECEIVED
OCT 22 1986
DEPT. OF NATURAL RESOURCES
BUREAU OF POLLUTION CONTROL

NATIONAL POLLUTANT DISCHARGE ELIMINATION SYSTEM (*NPDES*)
DISCHARGE MONITORING REPORT (*DMR*)

Form Approved.
OMB No. 2040-0004
Approval expires 9-30-88

(2-16) 90021 PERMIT NUMBER
(17-19) 001 DISCHARGE NUMBER

IND WSS W55

MONITORING PERIOD

	YEAR	MO	DAY		YEAR	MO	DAY
FROM	86	07	01	TO	86	08	01
	(20-21)	(22-23)	(24-25)		(26-27)	(28-29)	(30-31)

NOTE: Read instructions before completing this form.

PARAMETER (32-37)		QUANTITY OR LOADING (3 Card Only) (46-53) AVERAGE	QUANTITY OR LOADING (54-61) MAXIMUM	UNITS	QUALITY OR CONCENTRATION (4 Card Only) (38-45) MINIMUM	QUALITY OR CONCENTRATION (46-53) AVERAGE	QUALITY OR CONCENTRATION (54-61) MAXIMUM	UNITS	NO. EX (62-63)	FREQUENCY OF ANALYSIS (64-68)	SAMPLE TYPE (69-70)
PH, EFFLUENT	SAMPLE MEASUREMENT	****** ******	****** ******	****** ******	5.4	7.9	10.2		0	3/7	grab
000400	PERMIT REQUIREMENT	******	******	******	5.0	******	******	SU	***	3/7	GRAB
O[illegible]-GREASE	SAMPLE MEASUREMENT	0.4	2.2		2.7	9.2	20.0		0	3/7	grab
000550	PERMIT REQUIREMENT	******	******	LBS/DA	******	50	100	MG/L	***	3/7	GRAB
ARSENIC, TOTAL	SAMPLE MEASUREMENT	N/A	N/A		N/A	N/A	N/A		0	1/365	24HR Comp
001002	PERMIT REQUIREMENT	******	.13	LBS/DA	******	******	4	MG/L	***	1/365	24HR CO
CHROMIUM, TOTAL	SAMPLE MEASUREMENT	N/A	N/A		N/A	N/A	N/A		0	1/365	24 HR Comp
001034	PERMIT REQUIREMENT	******	.13	LBS/DA	******	******	4	MG/L	***	1/365	24HR CO
COPPER, TOTAL	SAMPLE MEASUREMENT	N/A	N/A		N/A	N/A	N/A		0	1/365	24 HR Comp
001042	PERMIT REQUIREMENT	******	.17	LBS/DA	******	******	5	MG/L	***	1/365	24HR CO
PH[illegible]OLS	SAMPLE MEASUREMENT	1.9	6.2		0.70	39.9	57.6		0	1/7	Grab
032730	PERMIT REQUIREMENT	******	48.8	LBS/DA	******	******	******	MG/L	***	1/7	GRAB
FLOW RATE	SAMPLE MEASUREMENT	.0058	.0130		****** ******	****** ******	****** ******	****** ******	0	1/1	INSTANT
074060	PERMIT REQUIREMENT	******	******	MG/DAY	******	******	******	**********		1/1	INSTANT

NAME/TITLE PRINCIPAL EXECUTIVE OFFICER
~~R.P. Michel Director Plant Operations~~ A.L. Martin V-President
TYPED OR PRINTED

I CERTIFY UNDER PENALTY OF LAW THAT I HAVE PERSONALLY EXAMINED AND AM FAMILIAR WITH THE INFORMATION SUBMITTED HEREIN; AND BASED ON MY INQUIRY OF THOSE INDIVIDUALS IMMEDIATELY RESPONSIBLE FOR OBTAINING THE INFORMATION, I BELIEVE THE SUBMITTED INFORMATION IS TRUE, ACCURATE AND COMPLETE. I AM AWARE THAT THERE ARE SIGNIFICANT PENALTIES FOR SUBMITTING FALSE INFORMATION, INCLUDING THE POSSIBILITY OF FINE AND IMPRISONMENT. SEE 18 U.S.C. § 1001 AND 33 U.S.C. § 1319. (*Penalties under these statutes may include fines up to $10,000 and/or maximum imprisonment of between 6 months and 5 years.*)

SIGNATURE OF PRINCIPAL EXECUTIVE OFFICER OR AUTHORIZED AGENT

TELEPHONE: AREA CODE 405, NUMBER 270-2395

DATE: YEAR 86, MO 08, DAY 01

COMMENT AND EXPLANATION OF ANY VIOLATIONS (*Reference all attachments here*)

PERMITTEE NAME/ADDRESS (*Include Facility Name/Location if different*)

NAME KERR-MCGEE

ADDRESS P.O. BOX906

COLUMBUS MS 39701

1680

FACILITY

LOCATION

NATIONAL POLLUTANT DISCHARGE ELIMINATION SYSTEM (*NPDES*)

DISCHARGE MONITORING REPORT (*DMR*)

Form Approved.
OMB No. 2040-0004
Approval expires 9-30-85

(2-16)	(17-19)
90021	001
PERMIT NUMBER	DISCHARGE NUMBER

IND WSS

MONITORING PERIOD

	YEAR	MO	DAY		YEAR	MO	DAY
FROM	86	06	01	TO	86	07	01
	(20-21)	(22-23)	(24-25)		(26-27)	(28-29)	(30-31)

NOTE: Read instructions before completing this form.

PARAMETER (32-37)		(3 Card Only) QUANTITY OR LOADING (46-53) AVERAGE	(54-61) MAXIMUM	UNITS	(4 Card Only) QUALITY OR CONCENTRATION (38-45) MINIMUM	(46-53) AVERAGE	(54-61) MAXIMUM	UNITS	NO. EX (62-63)	FREQUENCY OF ANALYSIS (64-68)	SAMPLE TYPE (69-70)
PH, EFFLUENT	SAMPLE MEASUREMENT	****** ******	****** ******	****** ******	6.4	7.8	8.69		0	3/7	grab
000400	PERMIT REQUIREMENT	******	******	******	5.0	******	******	SU	***	3/7	GRAB
D[illegible]GREASE	SAMPLE MEASUREMENT	N/A	N/A		2.5	3.7	6.0		0	3/7	grab
000550	PERMIT REQUIREMENT	******	******	LBS/DA	******	50	100	MG/L	***	3/7	GRAB
ARSENIC, TOTAL	SAMPLE MEASUREMENT	N/A	N/A		N/A	N/A	N/A		-	1/365	Comp
001002	PERMIT REQUIREMENT	******	.13	LBS/DA	******	******	4	MG/L	***	1/365	24HR CO
CHROMIUM, TOTAL	SAMPLE MEASUREMENT	N/A	N/A		N/A	N/A	N/A		-	1/365	Comp
001034	PERMIT REQUIREMENT	******	.13	LBS/DA	******	******	4	MG/L	***	1/365	24HR CO
COPPER, TOTAL	SAMPLE MEASUREMENT	N/A	N/A		N/A	N/A	N/A		-	1/365	Comp
001042	PERMIT REQUIREMENT	******	.17	LBS/DA	******	******	5	MG/L	***	1/365	24HR CO
P[illegible]NOLS	SAMPLE MEASUREMENT	~~6.2~~ 4.6	~~8.2~~ 19.6		75.3	96.2	136.8		0	1/7	grab
032730	PERMIT REQUIREMENT	******	48.8	LBS/DA	******	******	******	MG/L	***	1/7	GRAB
FLOW RATE	SAMPLE MEASUREMENT	.0058	.0173		****** ******	****** ******	****** ******	****** ******	-	1/1	instant
074060	PERMIT REQUIREMENT	******	******	MG/DAY	******	******	******	******	***	1/1	INSTANT

NAME/TITLE PRINCIPAL EXECUTIVE OFFICER

WJ BROUSSARD

Director-Plant Operations

TYPED OR PRINTED

I CERTIFY UNDER PENALTY OF LAW THAT I HAVE PERSONALLY EXAMINED AND AM FAMILIAR WITH THE INFORMATION SUBMITTED HEREIN AND BASED ON MY INQUIRY OF THOSE INDIVIDUALS IMMEDIATELY RESPONSIBLE FOR OBTAINING THE INFORMATION. I BELIEVE THE SUBMITTED INFORMATION IS TRUE, ACCURATE AND COMPLETE. I AM AWARE THAT THERE ARE SIGNIFICANT PENALTIES FOR SUBMITTING FALSE INFORMATION, INCLUDING THE POSSIBILITY OF FINE AND IMPRISONMENT. SEE 18 USC § 1001 AND 33 USC § 1319. (*Penalties under these statutes may include fines up to $10,000 and or maximum imprisonment of between 6 months and 5 years.*)

[signature]

SIGNATURE OF PRINCIPAL EXECUTIVE OFFICER OR AUTHORIZED AGENT

TELEPHONE		DATE		
405	270 2395	86	07	01
AREA CODE	NUMBER	YEAR	MO	DAY

COMMENT AND EXPLANATION OF ANY VIOLATIONS (*Reference all attachments here*)

EPA Form 3320-1 (Rev. 10-79) PREVIOUS EDITION TO BE USED UNTIL SUPPLY IS EXHAUSTED (REPLACES EPA FORM T-40 WHICH MAY NOT BE USED.) PAGE 1 OF 1

PERMITTEE NAME/ADDRESS (*Include Facility Name/Location if different*)

NAME KERR-MCGEE

ADDRESS P.O. BOX906

COLUMBUS MS 39701

1680

FACILITY

LOCATION

NATIONAL POLLUTANT DISCHARGE ELIMINATION SYSTEM (*NPDES*)
DISCHARGE MONITORING REPORT (*DMR*)

Form Approved. OMB No. 2040-0004 Approval expires 9-30-85

(2-16) PERMIT NUMBER: 90021

(17-19) DISCHARGE NUMBER: 001

IND WSS

MONITORING PERIOD

	YEAR (20-21)	MO (22-23)	DAY (24-25)		YEAR (26-27)	MO (28-29)	DAY (30-31)
FROM	86	05	01	TO	86	06	01

NOTE: Read instructions before completing this form.

PARAMETER (32-37)		(3 Card Only) QUANTITY OR LOADING (46-53) AVERAGE	(54-61) MAXIMUM	UNITS	(4 Card Only) QUALITY OR CONCENTRATION (38-45) MINIMUM	(46-53) AVERAGE	(54-61) MAXIMUM	UNITS	NO. EX (62-63)	FREQUENCY OF ANALYSIS (64-68)	SAMPLE TYPE (69-70)
PH, EFFLUENT	SAMPLE MEASUREMENT	******	******	******	7.1	7.2	7.3		0	3/7	grab
00400	PERMIT REQUIREMENT	******	******	******	5.0	******	******	SU	***	3/7	GRAB
OIL & GREASE	SAMPLE MEASUREMENT	N/A	N/A		3.0	4.8	8.0		0	3/7	grab
00550	PERMIT REQUIREMENT	******	******	LBS/DA	******	50	100	MG/L	***	3/7	GRAB
ARSENIC, TOTAL	SAMPLE MEASUREMENT	N/A	N/A		N/A	N/A	N/A		-	1/365	Comp
01002	PERMIT REQUIREMENT	******	.13	LBS/DA	******	******	4	MG/L	***	1/365	24HR CO
CHROMIUM, TOTAL	SAMPLE MEASUREMENT	N/A	N/A		N/A	N/A	N/A		-	1/365	Comp
01034	PERMIT REQUIREMENT	******	.13	LBS/DA	******	******	4	MG/L	***	1/365	24HR CO
COPPER, TOTAL	SAMPLE MEASUREMENT	N/A	N/A		N/A	N/A	N/A		-	1/365	Comp
01042	PERMIT REQUIREMENT	******	.17	LBS/DA	******	******	5	MG/L	***	1/365	24HR CO
PHENOLS	SAMPLE MEASUREMENT	40 ~~108~~	353		28.1	139.2	395.1		2	1/7	Grab
32730	PERMIT REQUIREMENT	******	48.8	LBS/DA	******	******	******	MG/L	***	1/7	GRAB
FLOW RATE	SAMPLE MEASUREMENT	.0346	.1440		****** ******	****** ******	****** ******	****** ******	-	1/1	Instan
74060	PERMIT REQUIREMENT	******	******	MG/DAY	******	******	******	**********	***	1/1	INSTAN

NAME/TITLE PRINCIPAL EXECUTIVE OFFICER

W J BROUSSARD

DIRECTOR-PLANT OPERATIONS

TYPED OR PRINTED

I CERTIFY UNDER PENALTY OF LAW THAT I HAVE PERSONALLY EXAMINED AND AM FAMILIAR WITH THE INFORMATION SUBMITTED HEREIN; AND BASED ON MY INQUIRY OF THOSE INDIVIDUALS IMMEDIATELY RESPONSIBLE FOR OBTAINING THE INFORMATION, I BELIEVE THE SUBMITTED INFORMATION IS TRUE, ACCURATE AND COMPLETE. I AM AWARE THAT THERE ARE SIGNIFICANT PENALTIES FOR SUBMITTING FALSE INFORMATION, INCLUDING THE POSSIBILITY OF FINE AND IMPRISONMENT. SEE 18 U.S.C. § 1001 AND 33 U.S.C. § 1319. (*Penalties under these statutes may include fines up to $10,000 and/or maximum imprisonment of between 6 months and 5 years.*)

SIGNATURE OF PRINCIPAL EXECUTIVE OFFICER OR AUTHORIZED AGENT

TELEPHONE: AREA CODE 405, NUMBER 270-2345

DATE: YEAR 86, MO 06, DAY 01

COMMENT AND EXPLANATION OF ANY VIOLATIONS (*Reference all attachments here*)

PERMITTEE NAME/ADDRESS (*Include Facility Name/Location if different*)

NAME KERR-MCGEE

ADDRESS P.O. BOX906

COLUMBUS MS 39701

1680

FACILITY

LOCATION

NATIONAL POLLUTANT DISCHARGE ELIMINATION SYSTEM (*NPDES*)

DISCHARGE MONITORING REPORT (*DMR*)

(2-16) PERMIT NUMBER	(17-19) DISCHARGE NUMBER
90021	001

MONITORING PERIOD	YEAR	MO	DAY		YEAR	MO	DAY
FROM	86	04	01	TO	86	05	01
	(20-21)	(22-23)	(24-25)		(26-27)	(28-29)	(30-31)

RECEIVED
JUL 28 1986
IND WSS
DEPT. OF NATURAL RESOURCE
BUREAU OF POLLUTION CONTROL

Form Approved. OMB No. 2040-0004 Approval expires 9-30-85

NOTE: Read instructions before completing this form.

PARAMETER (32-37)		(3 Card Only) QUANTITY OR LOADING (46-53) AVERAGE	(54-61) MAXIMUM	UNITS	(4 Card Only) QUALITY OR CONCENTRATION (38-45) MINIMUM	(46-53) AVERAGE	(54-61) MAXIMUM	UNITS	NO. EX (62-63)	FREQUENCY OF ANALYSIS (64-68)	SAMPLE TYPE (69-70)
PH, EFFLUENT	SAMPLE MEASUREMENT	******	******	******	6.9	7.5	9.5		O	3/7	GRAB
000400	PERMIT REQUIREMENT	******	******	******	5.0	******	******	SU	***	3/7	GRAB
[redacted]GREASE	SAMPLE MEASUREMENT	N/A	N/A		3.9	7.4	16.0		O	3/7	GRAB
000550	PERMIT REQUIREMENT	******	******	LBS/DA	******	50	100	MG/L	***	3/7	GRAB
ARSENIC, TOTAL	SAMPLE MEASUREMENT	N/A	N/A		N/A	N/A	N/A		—	1/365	COMP
001002	PERMIT REQUIREMENT	******	.13	LBS/DA	******	******	4	MG/L	***	1/365	24HR C
CHROMIUM, TOTAL	SAMPLE MEASUREMENT	N/A	N/A		N/A	N/A	N/A		—	1/365	COMP
001034	PERMIT REQUIREMENT	******	.13	LBS/DA	******	******	4	MG/L	***	1/365	24HR C
COPPER, TOTAL	SAMPLE MEASUREMENT	N/A	N/A		N/A	N/A	N/A		—	1/365	COMP
001042	PERMIT REQUIREMENT	******	.17	LBS/DA	******	******	5	MG/L	***	1/365	24HR C
P[redacted]NOLS	SAMPLE MEASUREMENT	~~23.44~~ 13.7	63.3		342	95.1	176.0		1	1/7	GRAB
032730	PERMIT REQUIREMENT	******	48.8	LBS/DA	******	******	******	MG/L	***	1/7	GRAB
FLOW RATE	SAMPLE MEASUREMENT	.013	.032		******	******	******	******	—	1/1	INSTN
074060	PERMIT REQUIREMENT	******	******	MG/DAY	******	******	******	******	***	1/1	INSTAN

NAME/TITLE PRINCIPAL EXECUTIVE OFFICER

W.J. BROUSSARD

DIRECTOR - PLANT OPERATIONS

TYPED OR PRINTED

I CERTIFY UNDER PENALTY OF LAW THAT I HAVE PERSONALLY EXAMINED AND AM FAMILIAR WITH THE INFORMATION SUBMITTED HEREIN AND BASED ON MY INQUIRY OF THOSE INDIVIDUALS IMMEDIATELY RESPONSIBLE FOR OBTAINING THE INFORMATION, I BELIEVE THE SUBMITTED INFORMATION IS TRUE, ACCURATE AND COMPLETE. I AM AWARE THAT THERE ARE SIGNIFICANT PENALTIES FOR SUBMITTING FALSE INFORMATION, INCLUDING THE POSSIBILITY OF FINE AND IMPRISONMENT. SEE 18 U.S.C. § 1001 AND 33 U.S.C. § 1319. *(Penalties under these statutes may include fines up to $10,000 and/or maximum imprisonment of between 6 months and 5 years.)*

SIGNATURE OF PRINCIPAL EXECUTIVE OFFICER OR AUTHORIZED AGENT

TELEPHONE		DATE		
AREA CODE	NUMBER	YEAR	MO	DAY
405	220-2395	86	05	01

COMMENT AND EXPLANATION OF ANY VIOLATIONS (*Reference all attachments here*)

COLUMBUS
1680 MS 39701

FACILITY

LOCATION

...ANT DISCHARGE ELIMINATION SYSTEM (NPDES)

DISCHARGE MONITORING REPORT (DMR)

(2-16) 90021 PERMIT NUMBER

(17-19) 001 DISCHARGE NUMBER

Form Appro...
OMB No. 20...
Approval exp...

IND

1986

MONITORING PERIOD

FROM YEAR	MO	DAY	TO YEAR	MO	DAY
86	03	01	86	04	01
(20-21)	(22-23)	(24-25)	(26-27)	(28-29)	(30-31)

NOTE: Read instructions before completing this fo...

PARAMETER (32-37)		QUANTITY OR LOADING (3 Card Only) (46-53) AVERAGE	MAXIMUM	UNITS	QUALITY OR CONCENTRATION (4 Card Only) (38-45) MINIMUM	(46-53) AVERAGE	(54-61) MAXIMUM	UNITS	NO. EX (62-63)	FREQUENCY OF ANALYSIS (64-68)
PH, EFFLUENT 000400	SAMPLE MEASUREMENT	******	******	******	7.3	10.0	12.0	SU	0	3/7
	PERMIT REQUIREMENT	******	******	******	5.0	******	******		***	3/7
O...-GREASE 000550	SAMPLE MEASUREMENT	N/A	N/A	LBS/DA	3.5	5.1	8.0	MG/L	0	3/7
	PERMIT REQUIREMENT	1.7	3.3		******	50	100		***	3/7
ARSENIC, TOTAL 001002	SAMPLE MEASUREMENT	N/A	N/A	LBS/DA	N/A	N/A	N/A	MG/L	1/365	24... Com...
	PERMIT REQUIREMENT	******	.13		******	******	4		***	1/365 24H...
CHROMIUM, TOTAL 001034	SAMPLE MEASUREMENT	N/A	N/A	LBS/DA	N/A	N/A	N/A	MG/L	1/365	24H... Comp...
	PERMIT REQUIREMENT	******	.13		******	******	4		***	1/365 24HR
COPPER, TOTAL 001042	SAMPLE MEASUREMENT	N/A	N/A	LBS/DA	N/A	N/A	N/A	MG/L	1/365	24H... Comp...
	PERMIT REQUIREMENT	******	.17		******	******	5		***	1/365 24HR
FLOW RATE 074060	SAMPLE MEASUREMENT	.0173	.0533	MG/DAY	******	******	******	******	1/1	00 INSTANT
	PERMIT REQUIREMENT	******	******		******	******	******	******	***	1/1 INSTA...
**********	SAMPLE MEASUREMENT	******	5.2	******	******	******	******	******	0	1/7 01 Grab
TOTAL Phenols	PERMIT REQUIREMENT	******	48.8	Lbs/DA	******	******	******	******	***	1/7 Grab

NAME/TITLE PRINCIPAL EXECUTIVE OFFICER

W.J. BROUSSARD
DIRECTOR-Plant operations

TYPED OR PRINTED

I CERTIFY UNDER PENALTY OF LAW THAT I HAVE PERSONALLY EXAMINED AND AM FAMILIAR WITH THE INFORMATION SUBMITTED HEREIN AND BASED ON MY INQUIRY OF THOSE INDIVIDUALS IMMEDIATELY RESPONSIBLE FOR OBTAINING THE INFORMATION. I BELIEVE THE SUBMITTED INFORMATION IS TRUE, ACCURATE AND COMPLETE. I AM AWARE THAT THERE ARE SIGNIFICANT PENALTIES FOR SUBMITTING FALSE INFORMATION, INCLUDING THE POSSIBILITY OF FINE AND IMPRISONMENT. SEE 18 USC § 1001 AND 33 USC § 1319. (Penalties under these statutes may include ... up to $10,000 and/or maximum imprisonment of between 6 months and 5 years.)

SIGNATURE OF PRINCIPAL EXECUTIVE OFFICER OR AUTHORIZED AGENT

TELEPHONE		DATE		
AREA CODE	NUMBER	YEAR	MO	DAY
405-270-2395		86	04	02

COMMENT AND EXPLANATION OF ANY VIOLATIONS (Reference all attachments here)

EPA Form 3320-1 (Rev. 10-79) PREVIOUS EDITION TO BE USED UNTIL SUPPLY IS EXHAUSTED

(REPLACES EPA FORM T-40 WHICH MAY NOT BE USED.)

PERMITTEE NAME/ADDRESS (*Include Facility Name/Location if different*)

NATIONAL POLLUTANT DISCHARGE ELIMINATION SYSTEM (*NPDES*)
DISCHARGE MONITORING REPORT (*DMR*)

OMB No. 2040-0004
Approval expires 9-30-85

NAME KERR-MCGEE
ADDRESS P.O. BOX906
COLUMBUS MS 39701
1680
FACILITY
LOCATION

(2-16) 90021 PERMIT NUMBER

(17-19) 001 DISCHARGE NUMBER

1ND WSS

MONITORING PERIOD

	YEAR	MO	DAY		YEAR	MO	DAY
FROM	86	02	01	TO	86	03	01
	(20-21)	(22-23)	(24-25)		(26-27)	(28-29)	(30-31)

NOTE: Read instructions before completing this form.

PARAMETER (32-37)		(3 Card Only) QUANTITY OR LOADING (46-53) AVERAGE	(54-61) MAXIMUM	UNITS	(4 Card Only) QUALITY OR CONCENTRATION (38-45) MINIMUM	(46-53) AVERAGE	(54-61) MAXIMUM	UNITS	NO. EX (62-63)	FREQUENCY OF ANALYSIS (64-68)	SAMPLE TYPE (69-70)
PH, EFFLUENT	SAMPLE MEASUREMENT	****** ******	****** ******	****** ******	8.7	10.5	12.2		0	3/7	GRAB 01
000400	PERMIT REQUIREMENT	******	******	******	5.0	******	******	SU	***	3/7	GRAB
[illegible]-GREASE	SAMPLE MEASUREMENT	N/A	N/A		3.9	9.8	20.7		0	3/7	GRAB
000550	PERMIT REQUIREMENT	1.7	3.3	LBS/DA	******	50	100	MG/L	***	3/7	GRAB
ARSENIC, TOTAL	SAMPLE MEASUREMENT	N/A	N/A		N/A	N/A	N/A			1/365	24HR Comp 10
001002	PERMIT REQUIREMENT	******	.13	LBS/DA	******	******	4	MG/L	***	1/365	24HR C
CHROMIUM, TOTAL	SAMPLE MEASUREMENT	N/A	N/A		N/A	N/A	N/A			1/365	24HR Comp
001034	PERMIT REQUIREMENT	******	.13	LBS/DA	******	******	4	MG/L	***	1/365	24HR C
COPPER, TOTAL	SAMPLE MEASUREMENT	N/A	N/A		N/A	N/A	N/A			1/365	24HR Comp
001042	PERMIT REQUIREMENT	******	.17	LBS/DA	******	******	5	MG/L	***	1/365	24HR C
FLOW RATE	SAMPLE MEASUREMENT	.0108	.0533		****** ******	****** ******	****** ******	****** ******		1/1	Instan 00
074060	PERMIT REQUIREMENT	******	******	MG/DAY	******	******	******	******	***	1/1	INSTAN
**********	SAMPLE MEASUREMENT	****** ******	33.6 ******	****** ******	****** ******	****** ******	****** ******	****** ******	0	1/7	Grab 01
TOTAL THEADS	PERMIT REQUIREMENT	******	48.8 ******	LBS/DA	******	******	******	******	***	1/7	Grab

NAME/TITLE PRINCIPAL EXECUTIVE OFFICER
W. J. BROUSSARD
DIR. PLANT OPERATIONS
TYPED OR PRINTED

I CERTIFY UNDER PENALTY OF LAW THAT I HAVE PERSONALLY EXAMINED AND AM FAMILIAR WITH THE INFORMATION SUBMITTED HEREIN AND BASED ON MY INQUIRY OF THOSE INDIVIDUALS IMMEDIATELY RESPONSIBLE FOR OBTAINING THE INFORMATION, I BELIEVE THE SUBMITTED INFORMATION IS TRUE, ACCURATE AND COMPLETE. I AM AWARE THAT THERE ARE SIGNIFICANT PENALTIES FOR SUBMITTING FALSE INFORMATION, INCLUDING THE POSSIBILITY OF FINE AND IMPRISONMENT. SEE 18 USC § 1001 AND 33 USC § 1319. (*Penalties under these statutes may include fines up to $10,000 and or maximum imprisonment of between 6 months and 5 years.*)

[signature]
SIGNATURE OF PRINCIPAL EXECUTIVE OFFICER OR AUTHORIZED AGENT

TELEPHONE		DATE		
AREA CODE	NUMBER	YEAR	MO	DAY
405	270 2395	86	03	03

COMMENT AND EXPLANATION OF ANY VIOLATIONS (*Reference all attachments here*)

EPA Form 3320-1 (Rev. 10-79) PREVIOUS EDITION TO BE USED UNTIL SUPPLY IS EXHAUSTED (REPLACES EPA FORM T-40 WHICH MAY NOT BE USED.) PAGE 1 OF 1

PERMITTEE NAME/ADDRESS (*Include Facility Name/Location if different*)

NAME KERR-MCGEE

ADDRESS P.O. BOX 906

COLUMBUS MS 39701

1680

FACILITY

LOCATION

NATIONAL POLLUTANT DISCHARGE ELIMINATION SYSTEM (*NPDES*)
DISCHARGE MONITORING REPORT (*DMR*)

Form Approved. OMB No. 2040-0004 Approval expires 9-30-85

(2-16) PERMIT NUMBER: 90021

(17-19) DISCHARGE NUMBER: 001

IND WSS

MONITORING PERIOD

	YEAR (20-21)	MO (22-23)	DAY (24-25)		YEAR (26-27)	MO (28-29)	DAY (30-31)
FROM	86	01	01	TO	86	02	01

NOTE: Read instructions before completing this form.

PARAMETER (32-37)		(3 Card Only) QUANTITY OR LOADING (46-53) AVERAGE	(54-61) MAXIMUM	UNITS	(4 Card Only) QUALITY OR CONCENTRATION (38-45) MINIMUM	(46-53) AVERAGE	(54-61) MAXIMUM	UNITS	NO. EX (62-63)	FREQUENCY OF ANALYSIS (64-68)	SAMPLE TYPE (69-70)
PH, EFFLUENT	SAMPLE MEASUREMENT	******	******	******	6.6	8.7	9.98		0	3/7	01 GRAB
000400	PERMIT REQUIREMENT	******	******	******	5.0	******	******	SU	***	3/7	GRAB
OIL-GREASE	SAMPLE MEASUREMENT	N/A	N/A		2.9	45	8.3		0	3/7	GRAB
000550	PERMIT REQUIREMENT	1.7	3.3	LBS/DA	******	50	100	MG/L	***	3/7	GRAB
ARSENIC, TOTAL	SAMPLE MEASUREMENT	N/A	N/A		N/A	N/A	N/A			1/365	24HR Comp 10
001002	PERMIT REQUIREMENT	******	.13	LBS/DA	******	******	4	MG/L	***	1/365	24HR C
CHROMIUM, TOTAL	SAMPLE MEASUREMENT	N/A	N/A		N/A	N/A	N/A			1/365	24HR Comp
001034	PERMIT REQUIREMENT	******	.13	LBS/DA	******	******	4	MG/L	***	1/365	24HR C
COPPER, TOTAL	SAMPLE MEASUREMENT	N/A	N/A		N/A	N/A	N/A			1/365	24HR Comp
001042	PERMIT REQUIREMENT	******	.17	LBS/DA	******	******	5	MG/L	***	1/365	24HR C
FLOW RATE	SAMPLE MEASUREMENT	.0173	.0763		******	******	******	******		1/1	00 INSTANT
074060	PERMIT REQUIREMENT	******	******	MG/DAY	******	******	******	**********		1/1	INSTAN
**********	SAMPLE MEASUREMENT	******	11.5	******	******	******	******	******	0	1/7	01 Grab
**********	PERMIT REQUIREMENT	******	******	******	******	******	******	**********		1/7	Grab
TOTAL Phenols			48.8	lbs/Da							

NAME/TITLE PRINCIPAL EXECUTIVE OFFICER		TELEPHONE	DATE		
W.I. BROUSSARD	I CERTIFY UNDER PENALTY OF LAW THAT I HAVE PERSONALLY EXAMINED AND AM FAMILIAR WITH THE INFORMATION SUBMITTED HEREIN AND BASED ON MY INQUIRY OF THOSE INDIVIDUALS IMMEDIATELY RESPONSIBLE FOR OBTAINING THE INFORMATION I BELIEVE THE SUBMITTED INFORMATION IS TRUE ACCURATE AND COMPLETE I AM AWARE THAT THERE ARE SIGNIFICANT PENALTIES FOR SUBMITTING FALSE INFORMATION INCLUDING THE POSSIBILITY OF FINE AND IMPRISONMENT SEE 18 USC § 1001 AND 33 U.S.C. § 1319 (*Penalties under these statutes may include up to $10,000 and/or maximum imprisonment of between 6 months and 5 years*)		405-270-2395	86	02	04
Director-Plant Operations		AREA CODE / NUMBER	YEAR	MO	DAY
TYPED OR PRINTED	SIGNATURE OF PRINCIPAL EXECUTIVE OFFICER OR AUTHORIZED AGENT				

COMMENT AND EXPLANATION OF ANY VIOLATIONS (*Reference all attachments here*)

Form Approv
OMB No. 204
Expires 2-29-

NATIONAL POLLUTANT DISCHARGE ELIMINATION SYSTEM (NPDES)
DISCHARGE MONITORING REPORT (DMR)

PERMITTEE NAME/ADDRESS (Include Facility Name/Location if different)

NAME KERR-MCGEE
ADDRESS P.O. BOX906
COLUMBUS MS 39701
1680
FACILITY
LOCATION

(2-16) PERMIT NUMBER: 90021
(17-19) DISCHARGE NUMBER: 001

IND 1985

MONITORING PERIOD

	YEAR	MO	DAY		YEAR	MO	DAY
FROM	85	12	01	TO	85	01	01
	(20-21)	(22-23)	(24-25)		(26-27)	(28-29)	(30-31)

NOTE: Read instructions before completing this form

PARAMETER (32-37)		(3 Card Only) QUANTITY OR LOADING (46-53) AVERAGE	(54-61) MAXIMUM	UNITS	(4 Card Only) QUALITY OR CONCENTRATION (38-45) MINIMUM	(46-53) AVERAGE	(54-61) MAXIMUM	UNITS	NO. EX (62-63)	FREQUENCY OF ANALYSIS (64-68)
Phenol 32730	SAMPLE MEASUREMENT	****** ******	11.8	#/day	N/A	N/A	N/A			1/wk
	PERMIT REQUIREMENT	******	48.8			******	******		**	
	SAMPLE MEASUREMENT									
	PERMIT REQUIREMENT				******				**	
	SAMPLE MEASUREMENT									
	PERMIT REQUIREMENT	******			******	******			**	
	SAMPLE MEASUREMENT									
	PERMIT REQUIREMENT	******			******	******			**	
	SAMPLE MEASUREMENT									
	PERMIT REQUIREMENT	******			******	******			**	
	SAMPLE MEASUREMENT				****** ******	****** ******	****** ******	****** ******		
	PERMIT REQUIREMENT	******	******		******	******	******	******	**	
********** ********** **********	SAMPLE MEASUREMENT	****** ******	****** ******	****** ******	****** ******	****** ******	****** ******	****** ******	****** ******	****** ******
	PERMIT REQUIREMENT	******	******	******	******	******	******	******	**	******

NAME/TITLE PRINCIPAL EXECUTIVE OFFICER
W.J. Broussard
Director-Plant Operations
TYPED OR PRINTED

I CERTIFY UNDER PENALTY OF LAW THAT I HAVE PERSONALLY EXAMINED AND AM FAMILIAR WITH THE INFORMATION SUBMITTED HEREIN; AND BASED ON MY INQUIRY OF THOSE INDIVIDUALS IMMEDIATELY RESPONSIBLE FOR OBTAINING THE INFORMATION, I BELIEVE THE SUBMITTED INFORMATION IS TRUE, ACCURATE AND COMPLETE. I AM AWARE THAT THERE ARE SIGNIFICANT PENALTIES FOR SUBMITTING FALSE INFORMATION, INCLUDING THE POSSIBILITY OF FINE AND IMPRISONMENT. SEE 18 U.S.C. § 1001 AND 33 U.S.C § 1319. (Penalties under these statutes may include fines up to $10,000 and/or maximum imprisonment of between 6 months and 5 years.)

SIGNATURE OF PRINCIPAL EXECUTIVE OFFICER OR AUTHORIZED AGENT

TELEPHONE: 405-270-2395 (AREA CODE, NUMBER)
DA: 86/01 (YEAR, M)

COMMENT AND EXPLANATION OF ANY VIOLATIONS (Reference all attachments here)

PAGE

EPA Form 3320-1 (Rev. 10-79) PREVIOUS EDITION TO BE USED (REPLACES EPA FORM T-40 WHICH MAY NOT BE USED.)

PERMITTEE NAME/ADDRESS (*Include Facility Name/Location if different*)

NAME KERR-MCGEE

ADDRESS P.O. BOX906

COLUMBUS MS 39701

1680

FACILITY

LOCATION

NATIONAL POLLUTANT DISCHARGE ELIMINATION SYSTEM (*NPDES*)

DISCHARGE MONITORING REPORT (*DMR*)

OMB No. 2040-0004
Expires 2-29-84

(2-16) PERMIT NUMBER: 90021

(17-19) DISCHARGE NUMBER: 001

IND WSS

MONITORING PERIOD

	YEAR (20-21)	MO (22-23)	DAY (24-25)		YEAR (26-27)	MO (28-29)	DAY (30-31)
FROM	85	12	01	TO	86	01	01

NOTE: Read Instructions before completing this form.

PARAMETER (32-37)		(3 Card Only) QUANTITY OR LOADING (46-53) AVERAGE	(54-61) MAXIMUM	UNITS	(4 Card Only) QUALITY OR CONCENTRATION (38-45) MINIMUM	(46-53) AVERAGE	(54-61) MAXIMUM	UNITS	NO. EX (62-63)	FREQUENCY OF ANALYSIS (64-68)	SAMPLE TYPE (69-70)
PH, EFFLUENT	SAMPLE MEASUREMENT	******	******	******	6.67	7.29	9.08			3/7	grab
000400	PERMIT REQUIREMENT	******	******	******	5.0	******	******	SU	**	3/7	GRAB
OIL-GREASE	SAMPLE MEASUREMENT	N/A	N/A		4.6	6.8	9.3			3/7	grab
00550	PERMIT REQUIREMENT	~~1.7~~	~~2.3~~	LBS/DA	******	50	100	MG/L	***	3/7	GRAB
ARSENIC, TOTAL	SAMPLE MEASUREMENT	N/A	N/A		N/A	N/A	N/A				
001002	PERMIT REQUIREMENT	******	.13	LBS/DA	******	******	4	MG/L	***	1/365	24HR
CHROMIUM, TOTAL	SAMPLE MEASUREMENT	N/A	N/A		N/A	N/A	N/A				
001034	PERMIT REQUIREMENT	******	.13	LBS/DA	******	******	4	MG/L	***	1/365	24HR
COPPER, TOTAL	SAMPLE MEASUREMENT	N/A	N/A		N/A	N/A	N/A				
001042	PERMIT REQUIREMENT	******	.17	LBS/DA	******	******	5	MG/L	***	1/365	24HR
FLOW RATE	SAMPLE MEASUREMENT	.0244	.0763		******	******	******	******		1/1	
50060	PERMIT REQUIREMENT	******	******	MG/DAY	******	******	******	******	***	1/1	INSTA
**********	SAMPLE MEASUREMENT	******	******	******	******	******	******	******		******	******
**********		******	******	******	******	******	******	******		******	******
**********	PERMIT REQUIREMENT	******	******	******	******	******	******	******	***	******	******

NAME/TITLE PRINCIPAL EXECUTIVE OFFICER

~~W.J. Broussard~~
~~Director Plant Operations~~
P.C. Gaskin, Environmental Affairs

TYPED OR PRINTED

I CERTIFY UNDER PENALTY OF LAW THAT I HAVE PERSONALLY EXAMINED AND AM FAMILIAR WITH THE INFORMATION SUBMITTED HEREIN; AND BASED ON MY INQUIRY OF THOSE INDIVIDUALS IMMEDIATELY RESPONSIBLE FOR OBTAINING THE INFORMATION, I BELIEVE THE SUBMITTED INFORMATION IS TRUE, ACCURATE AND COMPLETE. I AM AWARE THAT THERE ARE SIGNIFICANT PENALTIES FOR SUBMITTING FALSE INFORMATION, INCLUDING THE POSSIBILITY OF FINE AND IMPRISONMENT. SEE 18 U.S.C. § 1001 AND 33 U.S.C. § 1319. (*Penalties under these statutes may include fines up to $10,000 and/or maximum imprisonment of between 6 months and 5 years.*)

SIGNATURE OF PRINCIPAL EXECUTIVE OFFICER OR AUTHORIZED AGENT

TELEPHONE: AREA CODE 405 NUMBER 270-2395

DATE: YEAR 86 MO 01 DAY 01

COMMENT AND EXPLANATION OF ANY VIOLATIONS (*Reference all attachments here*)

Form Approved
OMB No. 2040-(
Expires 2-29-84

PERMITTEE NAME/ADDRESS (*Include Facility Name/Location if different*)

NAME KERR-MCGEE

ADDRESS P.O. BOX906

COLUMBUS MS 39701

1680

FACILITY

LOCATION

NATIONAL POLLUTANT DISCHARGE ELIMINATION SYSTEM (*NPDES*)
DISCHARGE MONITORING REPORT (*DMR*)

(2-16) PERMIT NUMBER: 50021

(17-19) DISCHARGE NUMBER: 001

IND W:

MONITORING PERIOD

	YEAR	MO	DAY		YEAR	MO	DAY
FROM	85 (20-21)	11 (22-23)	01 (24-25)	TO	85 (26-27)	12 (28-29)	01 (30-31)

NOTE: Read instructions before completing this form.

PARAMETER (32-37)		(3 Card Only) QUANTITY OR LOADING (46-53) AVERAGE	(54-61) MAXIMUM	UNITS	(4 Card Only) QUALITY OR CONCENTRATION (38-45) MINIMUM	(46-53) AVERAGE	(54-61) MAXIMUM	UNITS	NO. EX (62-63)	FREQUENCY OF ANALYSIS (64-68)	SAMI TYP (69-7
Phenol 32730	SAMPLE MEASUREMENT	****** ******	5.9	#/day	N/A	N/A	N/A			1/WK	
	PERMIT REQUIREMENT	******	48.8			******	******		**		
	SAMPLE MEASUREMENT										
	PERMIT REQUIREMENT				******				**		
	SAMPLE MEASUREMENT										
	PERMIT REQUIREMENT	******			******	******			**		
	SAMPLE MEASUREMENT										
	PERMIT REQUIREMENT	******			******	******			**		
	SAMPLE MEASUREMENT										
	PERMIT REQUIREMENT	******			******	******			**		
	SAMPLE MEASUREMENT				****** ******	****** ******	****** ******	****** ******			
	PERMIT REQUIREMENT	******	******		******	******	******	******	*****		
********** ********** **********	SAMPLE MEASUREMENT	****** ****** ******	****** ****** ******	****** ****** ******	****** ****** ******	****** ****** ******	****** ****** ******	****** ****** ******	****** ****** ******	******** ******** ********	
	PERMIT REQUIREMENT	******	******		******	******	******	******	*****		

NAME/TITLE PRINCIPAL EXECUTIVE OFFICER			TELEPHONE		DATE	
W.J. Broussard Director-Plant operations	I CERTIFY UNDER PENALTY OF LAW THAT I HAVE PERSONALLY EXAMINED AND AM FAMILIAR WITH THE INFORMATION SUBMITTED HEREIN; AND, BASED ON MY INQUIRY OF THOSE INDIVIDUALS IMMEDIATELY RESPONSIBLE FOR OBTAINING THE INFORMATION, I BELIEVE THE SUBMITTED INFORMATION IS TRUE, ACCURATE AND COMPLETE. I AM AWARE THAT THERE ARE SIGNIFICANT PENALTIES FOR SUBMITTING FALSE INFORMATION, INCLUDING THE POSSIBILITY OF FINE AND IMPRISONMENT. SEE 18 U.S.C. § 1001 AND 33 U.S.C. § 1319. (*Penalties under these statutes may include fines up to $10,000 and/or maximum imprisonment of between 6 months and 5 years.*)		AREA CODE 405	NUMBER 270-2395	YEAR 85	MO 12
TYPED OR PRINTED		SIGNATURE OF PRINCIPAL EXECUTIVE OFFICER OR AUTHORIZED AGENT				

COMMENT AND EXPLANATION OF ANY VIOLATIONS (*Reference all attachments here*)

PERMITTEE NAME/ADDRESS (Include Facility Name/Location if different)

NAME KERR-MCGEE

ADDRESS P.O. BOX 906

COLUMBUS MS 39701

1680

FACILITY

LOCATION

NATIONAL POLLUTANT DISCHARGE ELIMINATION SYSTEM (NPDES)

DISCHARGE MONITORING REPORT (DMR)

Form Approved
OMB No. 2040-0004
Expires 2-29-84

(2-16) PERMIT NUMBER: 90021

(17-19) DISCHARGE NUMBER: 001

IND WSS

MONITORING PERIOD

	YEAR	MO	DAY		YEAR	MO	DAY
FROM	85	11	01	TO	85	12	01
	(20-21)	(22-23)	(24-25)		(26-27)	(28-29)	(30-31)

NOTE: Read instructions before completing this form.

PARAMETER (32-37)		(3 Card Only) QUANTITY OR LOADING (46-53) AVERAGE	(54-61) MAXIMUM	UNITS	(4 Card Only) QUALITY OR CONCENTRATION (38-45) MINIMUM	(46-53) AVERAGE	(54-61) MAXIMUM	UNITS	NO. EX (62-63)	FREQUENCY OF ANALYSIS (64-68)	SAMPLE TYPE (69-70)
PH, EFFLUENT	SAMPLE MEASUREMENT	******	******	******	6.7	7.4	9.0			3/7	grab
000400	PERMIT REQUIREMENT	******	******	******	5.0	******	******	SU	**	3/7	GRA
OIL-GREASE	SAMPLE MEASUREMENT	N/A	N/A		2.5	18.7	41.0			3/7	grab
00550	PERMIT REQUIREMENT	~~1.7~~	~~2.3~~	LBS/DA	******	50	100	MG/L	**	3/7	GRA
ARSENIC, TOTAL	SAMPLE MEASUREMENT	N/A	N/A		N/A	N/A	N/A				
001002	PERMIT REQUIREMENT	******	.13	LBS/DA	******	******	4	MG/L	**	1/365	24HR
CHROMIUM, TOTAL	SAMPLE MEASUREMENT	N/A	N/A			N/A	N/A				
001034	PERMIT REQUIREMENT	******	.13	LBS/DA	******	******	4	MG/L	**	1/365	24HR
COPPER, TOTAL	SAMPLE MEASUREMENT	N/A	N/A			N/A	N/A				
001042	PERMIT REQUIREMENT	******	.17	LBS/DA	******	******	5	MG/L	**	1/365	24HR
FLOW RATE	SAMPLE MEASUREMENT	.0086	.0533		******	******	******	******			
50060	PERMIT REQUIREMENT	******	******	MG/DAY	******	******	******	******	**	1/1	INSTA
**********	SAMPLE MEASUREMENT	******	******	******	******	******	******	******		******	******
**********	SAMPLE MEASUREMENT	******	******	******	******	******	******	******		******	******
**********	PERMIT REQUIREMENT	******	******	******	******	******	******	******	**	******	******

NAME/TITLE PRINCIPAL EXECUTIVE OFFICER

~~W.J. Brousard~~
~~Director Plant Operations~~
P.C. Gaskin, Environmental Affairs

TYPED OR PRINTED

I CERTIFY UNDER PENALTY OF LAW THAT I HAVE PERSONALLY EXAMINED AND AM FAMILIAR WITH THE INFORMATION SUBMITTED HEREIN; AND BASED ON MY INQUIRY OF THOSE INDIVIDUALS IMMEDIATELY RESPONSIBLE FOR OBTAINING THE INFORMATION, I BELIEVE THE SUBMITTED INFORMATION IS TRUE, ACCURATE AND COMPLETE. I AM AWARE THAT THERE ARE SIGNIFICANT PENALTIES FOR SUBMITTING FALSE INFORMATION, INCLUDING THE POSSIBILITY OF FINE AND IMPRISONMENT. SEE 18 U.S.C. § 1001 AND 33 U.S.C. § 1319. *(Penalties under these statutes may include fines up to $10,000 and/or maximum imprisonment of between 6 months and 5 years.)*

SIGNATURE OF PRINCIPAL EXECUTIVE OFFICER OR AUTHORIZED AGENT

TELEPHONE: AREA CODE 405 NUMBER 270-2395

DATE: YEAR ~~XX~~ 85 MO 12 DAY 01

COMMENT AND EXPLANATION OF ANY VIOLATIONS *(Reference all attachments here)*

PERMITTEE NAME/ADDRESS (Include Facility Name/Location if different)

NAME KERR-MCGEE — Lowndes

ADDRESS P.O. BOX906

COLUMBUS MS 39701

1680

FACILITY

LOCATION

NATIONAL POLLUTANT DISCHARGE ELIMINATION SYSTEM (NPDES)

DISCHARGE MONITORING REPORT (DMR)

Form Approved
OMB No. 2040-0004
Expires 2-29-84

(2-16) PERMIT NUMBER	(17-19) DISCHARGE NUMBER
90021	001

IND WSS

MONITORING PERIOD	YEAR (20-21)	MO (22-23)	DAY (24-25)		YEAR (26-27)	MO (28-29)	DAY (30-31)
FROM	85	10	01	TO	85	11	01

NOTE: Read instructions before completing this form.

PARAMETER (32-37)		(3 Card Only) QUANTITY OR LOADING (46-53) AVERAGE	(54-61) MAXIMUM	UNITS	(4 Card Only) QUALITY OR CONCENTRATION (38-45) MINIMUM	(46-53) AVERAGE	(54-61) MAXIMUM	UNITS	NO. EX (62-63)	FREQUENCY OF ANALYSIS (64-68)	SAMPLE TYPE (69-70)
PH, EFFLUENT	SAMPLE MEASUREMENT	******	******	******	5.67	7.86	9.49			3/7	GRAB
000400	PERMIT REQUIREMENT	******	******	******	5.0	******	******	SU	***	3/7	GRA
OIL-GREASE	SAMPLE MEASUREMENT	N/A	N/A		2.0	4.3	9.1			3/7	grab
00550	PERMIT REQUIREMENT			LBS/DA	******	50	100	MG/L	***	3/7	GRA
ARSENIC, TOTAL	SAMPLE MEASUREMENT	N/A	N/A		N/A	N/A	N/A			1/365	24HR
001002	PERMIT REQUIREMENT	******	.13	LBS/DA	******	******	4	MG/L	***	1/365	24HR
CHROMIUM, TOTAL	SAMPLE MEASUREMENT	N/A	N/A		N/A	N/A	N/A			1/365	24/HR
001034	PERMIT REQUIREMENT	******	.13	LBS/DA	******	******	4	MG/L	***	1/365	24HR
COPPER, TOTAL	SAMPLE MEASUREMENT	N/A	N/A		N/A	N/A	N/A			1/365	24/HR
001042	PERMIT REQUIREMENT	******	.17	LBS/DA	******	******	5	MG/L	***	1/365	24HR
FLOW RATE	SAMPLE MEASUREMENT	.0108	.0763		******	******	******	******			
50060	PERMIT REQUIREMENT	******	******	MG/DAY	******	******	******	******	***	1/1	INSTA
**********	SAMPLE MEASUREMENT	******	******	******	******	******	******	******		******	******
**********	SAMPLE MEASUREMENT	******	******	******	******	******	******	******		******	******
**********	PERMIT REQUIREMENT	******	******	******	******	******	******	******	***	******	******

NAME/TITLE PRINCIPAL EXECUTIVE OFFICER

~~W.S. BROUSSARD~~
~~DIR. PLANT OPERATIONS~~
P.C. Gaskin, Environmental Affairs

TYPED OR PRINTED

I CERTIFY UNDER PENALTY OF LAW THAT I HAVE PERSONALLY EXAMINED AND AM FAMILIAR WITH THE INFORMATION SUBMITTED HEREIN; AND BASED ON MY INQUIRY OF THOSE INDIVIDUALS IMMEDIATELY RESPONSIBLE FOR OBTAINING THE INFORMATION, I BELIEVE THE SUBMITTED INFORMATION IS TRUE, ACCURATE AND COMPLETE. I AM AWARE THAT THERE ARE SIGNIFICANT PENALTIES FOR SUBMITTING FALSE INFORMATION, INCLUDING THE POSSIBILITY OF FINE AND IMPRISONMENT. SEE 18 U.S.C. § 1001 AND 33 U.S.C. § 1319. *(Penalties under these statutes may include fines up to $10,000 and/or maximum imprisonment of between 6 months and 5 years.)*

SIGNATURE OF PRINCIPAL EXECUTIVE OFFICER OR AUTHORIZED AGENT

TELEPHONE		DATE		
AREA CODE	NUMBER	YEAR	MO	DAY
405	270-2345	85	11	01

COMMENT AND EXPLANATION OF ANY VIOLATIONS *(Reference all attachments here)*

EE NAME/ADDRESS (*Include Name/Location if different*)
E KERR-MCGEE
DRESS P.O. BOX 906
COLUMBUS MS 39701
1680
ACILITY
LOCATION

NATIONAL POLLUTANT DISCHARGE ELIMINATION SYSTEM (*NPDES*)
DISCHARGE MONITORING REPORT (*DMR*)

Form Approved
OMB No. 2040-0004
Expires 2-29-84

(2-16) PERMIT NUMBER: 50021
(17-19) DISCHARGE NUMBER: 001

IND WSS

MONITORING PERIOD

	YEAR (20-21)	MO (22-23)	DAY (24-25)		YEAR (26-27)	MO (28-29)	DAY (30-31)
FROM	85	09	01	TO	85	10	01

NOTE: Read instructions before completing this form.

PARAMETER (32-37)		(3 Card Only) QUANTITY OR LOADING (46-53) AVERAGE	(54-61) MAXIMUM	UNITS	(4 Card Only) QUALITY OR CONCENTRATION (38-45) MINIMUM	(46-53) AVERAGE	(54-61) MAXIMUM	UNITS	NO. EX (62-63)	FREQUENCY OF ANALYSIS (64-68)	SAMPLE TYPE (69-70)
PH, EFFLUENT	SAMPLE MEASUREMENT	******	******	******	6.66	6.67	6.68			3/7	GRAB
000400	PERMIT REQUIREMENT	******	******	******	5.0	******	******	SU	***	3/7	GRA
OIL-GREASE	SAMPLE MEASUREMENT	0.200	0.396		2.0	4.2	7.0			3/7	GRAB
000550	PERMIT REQUIREMENT	1.7	3.3	LBS/DA	******	50	100	MG/L	***	3/7	GRA
ARSENIC, TOTAL	SAMPLE MEASUREMENT	N/A	N/A		N/A	N/A	N/A			1/365	24HR
001002	PERMIT REQUIREMENT	******	.13	LBS/DA	******	******	4	MG/L	***	1/365	24HR
CHROMIUM, TOTAL	SAMPLE MEASUREMENT	N/A	N/A		N/A	N/A	N/A			1/365	24HR
001034	PERMIT REQUIREMENT	******	.13	LBS/DA	******	******	4	MG/L	***	1/365	24HR
COPPER, TOTAL	SAMPLE MEASUREMENT	N/A	N/A		N/A	N/A	N/A			1/365	24HR
001042	PERMIT REQUIREMENT	******	.17	LBS/DA	******	******	5	MG/L	***	1/365	24HR
FLOW RATE	SAMPLE MEASUREMENT	.0058	.0086		******	******	******	******		1/1	INSTNT
74060	PERMIT REQUIREMENT	******	******	MG/DAY	******	******	******	******	***	1/1	INSTA
**********	SAMPLE MEASUREMENT	******	******	******	******	******	******	******		******	******
**********	SAMPLE MEASUREMENT	******	******	******	******	******	******	******		******	******
**********	PERMIT REQUIREMENT	******	******	******	******	******	******	******	***	******	******

NAME/TITLE PRINCIPAL EXECUTIVE OFFICER		TELEPHONE		DATE		
W.J. BROUSSARD	I CERTIFY UNDER PENALTY OF LAW THAT I HAVE PERSONALLY EXAMINED AND AM FAMILIAR WITH THE INFORMATION SUBMITTED HEREIN; AND BASED ON MY INQUIRY OF THOSE INDIVIDUALS IMMEDIATELY RESPONSIBLE FOR OBTAINING THE INFORMATION, I BELIEVE THE SUBMITTED INFORMATION IS TRUE, ACCURATE AND COMPLETE. I AM AWARE THAT THERE ARE SIGNIFICANT PENALTIES FOR SUBMITTING FALSE INFORMATION, INCLUDING THE POSSIBILITY OF FINE AND IMPRISONMENT. SEE 18 U.S.C. § 1001 AND 33 U.S.C. § 1319. *(Penalties under these statutes may include fines up to $10,000 and/or maximum imprisonment of between 6 months and 5 years.)*		AREA CODE: 405	NUMBER: 270-2395	YEAR: 85	MO: 10	DAY: 11
DIRECTOR-PLANT OPERATIONS						
TYPED OR PRINTED	SIGNATURE OF PRINCIPAL EXECUTIVE OFFICER OR AUTHORIZED AGENT					

COMMENT AND EXPLANATION OF ANY VIOLATIONS (*Reference all attachments here*)

[redacted] NAME/ADDRESS (Include Name/Location if different)

[redacted] KERR-MCGEE
ADDRESS P.O. BOX 906
COLUMBUS MS 39701
1680
FACILITY
LOCATION

NATIONAL POLLUTANT DISCHARGE ELIMINATION SYSTEM (NPDES)
DISCHARGE MONITORING REPORT (DMR)

Form Approved
OMB No. 2040-0004
Expires 2-29-84

(2-16) PERMIT NUMBER: 90021
(17-19) DISCHARGE NUMBER: 001

IND WSS

MONITORING PERIOD

	YEAR (20-21)	MO (22-23)	DAY (24-25)		YEAR (26-27)	MO (28-29)	DAY (30-31)
FROM	85	08	01	TO	85	09	01

NOTE: Read instructions before completing this form.

PARAMETER (32-37)		(3 Card Only) QUANTITY OR LOADING (46-53) AVERAGE	(54-61) MAXIMUM	UNITS	(4 Card Only) QUALITY OR CONCENTRATION (38-45) MINIMUM	(46-53) AVERAGE	(54-61) MAXIMUM	UNITS	NO. EX (62-63)	FREQUENCY OF ANALYSIS (64-68)	SAMPLE TYPE (69-70)
PH, EFFLUENT	SAMPLE MEASUREMENT	******	******	******	6.05	6.56	6.90			3/7	GRAB
000400	PERMIT REQUIREMENT	******	******	******	5.0	******	******	SU	***	3/7	GRA
OIL-GREASE	SAMPLE MEASUREMENT	.223	1.12		2.3	4.6	7.9			3/7	GRAB
00550	PERMIT REQUIREMENT	1.7	3.3	LBS/DA	******	50	100	MG/L	***	3/7	GRA
ARSENIC, TOTAL	SAMPLE MEASUREMENT	N/A	N/A		N/A	N/A	N/A			1/365	24HR
001002	PERMIT REQUIREMENT	******	.13	LBS/DA	******	******	4	MG/L	***	1/365	24HR
CHROMIUM, TOTAL	SAMPLE MEASUREMENT	N/A	N/A		N/A	N/A	N/A			1/365	24HR
001034	PERMIT REQUIREMENT	******	.13	LBS/DA	******	******	4	MG/L	***	1/365	24HR
COPPER, TOTAL	SAMPLE MEASUREMENT	N/A	N/A		N/A	N/A	N/A			1/365	24HR
001042	PERMIT REQUIREMENT	******	.17	LBS/DA	******	******	5	MG/L	***	1/365	24HR
FLOW RATE	SAMPLE MEASUREMENT	.0058	.0533		******	******	******	******		1/1	INST
4060	PERMIT REQUIREMENT	******	******	MG/DAY	******	******	******	******	****	1/1	INSTA
**********	SAMPLE MEASUREMENT	******	******	******	******	******	******	******		******	******
**********	SAMPLE MEASUREMENT	******	******	******	******	******	******	******		******	******
**********	PERMIT REQUIREMENT	******	******	******	******	******	******	******	***	******	******

NAME/TITLE PRINCIPAL EXECUTIVE OFFICER

W.J. BROUSSARD
DIRECTOR - PLANT OPERATIONS
TYPED OR PRINTED

I CERTIFY UNDER PENALTY OF LAW THAT I HAVE PERSONALLY EXAMINED AND AM FAMILIAR WITH THE INFORMATION SUBMITTED HEREIN; AND BASED ON MY INQUIRY OF THOSE INDIVIDUALS IMMEDIATELY RESPONSIBLE FOR OBTAINING THE INFORMATION, I BELIEVE THE SUBMITTED INFORMATION IS TRUE, ACCURATE AND COMPLETE. I AM AWARE THAT THERE ARE SIGNIFICANT PENALTIES FOR SUBMITTING FALSE INFORMATION, INCLUDING THE POSSIBILITY OF FINE AND IMPRISONMENT. SEE 18 U.S.C. § 1001 AND 33 U.S.C. § 1319. *(Penalties under these statutes may include fines up to $10,000 and/or maximum imprisonment of between 6 months and 5 years.)*

SIGNATURE OF PRINCIPAL EXECUTIVE OFFICER OR AUTHORIZED AGENT

TELEPHONE: AREA CODE 405 NUMBER 270-2395

DATE: YEAR 85 MO 10 DAY 11

COMMENT AND EXPLANATION OF ANY VIOLATIONS *(Reference all attachments here)*

EE NAME/ADDRESS (Include ing./Location if different)

E KERR-MCGEE

DRESS P.O. BOX906

COLUMBUS MS 39701

1680

FACILITY

LOCATION

NATIONAL POLLUTANT DISCHARGE ELIMINATION SYSTEM (NPDES)

DISCHARGE MONITORING REPORT (DMR)

Form Approved
OMB No. 2040-0004
Expires 2-29-84

JC

(2-16) PERMIT NUMBER	(17-19) DISCHARGE NUMBER
90021	001

IND WSS

MONITORING PERIOD

	YEAR (20-21)	MO (22-23)	DAY (24-25)		YEAR (26-27)	MO (28-29)	DAY (30-31)
FROM	85	07	01	TO	85	08	01

NOTE: Read instructions before completing this form.

PARAMETER (32-37)		(3 Card Only) QUANTITY OR LOADING (46-53) AVERAGE	(54-61) MAXIMUM	UNITS	(4 Card Only) QUALITY OR CONCENTRATION (38-45) MINIMUM	(46-53) AVERAGE	(54-61) MAXIMUM	UNITS	NO. EX (62-63)	FREQUENCY OF ANALYSIS (64-68)	SAMPLE TYPE (69-70)
PH, EFFLUENT	SAMPLE MEASUREMENT	******	******	******	6.1	6.2	6.3			3/7	GRAB
000400	PERMIT REQUIREMENT	******	******	******	5.0	******	******	SU	**	3/7	GRA
OIL-GREASE	SAMPLE MEASUREMENT	1.04	3.13		3.3	7.2	10.6			3/7	GRAB
000550	PERMIT REQUIREMENT	1.7	3.3	LBS/DA	******	50	100	MG/L	**	3/7	GRA
ARSENIC, TOTAL	SAMPLE MEASUREMENT	N-A	N-A		N/A	N/A	N/A			1/365	24HRC
001002	PERMIT REQUIREMENT	******	.13	LBS/DA	******	******	4	MG/L	***	1/365	24HR
CHROMIUM, TOTAL	SAMPLE MEASUREMENT	N/A	N/A		N/A	N/A	N/A			1/365	24HR
001034	PERMIT REQUIREMENT	******	.13	LBS/DA	******	******	4	MG/L	***	1/365	24HR
COPPER, TOTAL	SAMPLE MEASUREMENT	N/A	N/A		N/A	N/A	N/A			1/365	24HR
001042	PERMIT REQUIREMENT	******	.17	LBS/DA	******	******	5	MG/L	***	1/365	24HR
FLOW RATE	SAMPLE MEASUREMENT	.0173	.0432		******	******	******	******		1/1	INSTA
74060	PERMIT REQUIREMENT	******	******	MG/DAY	******	******	******	******	***	1/1	INSTA
**********	SAMPLE MEASUREMENT	******	******	******	******	******	******	******		******	******
**********	SAMPLE MEASUREMENT	******	******	******	******	******	******	******		******	******
**********	PERMIT REQUIREMENT	******	******	******	******	******	******	******	***	******	******

NAME/TITLE PRINCIPAL EXECUTIVE OFFICER		TELEPHONE		DATE		
W.J. BROUSSARD	I CERTIFY UNDER PENALTY OF LAW THAT I HAVE PERSONALLY EXAMINED AND AM FAMILIAR WITH THE INFORMATION SUBMITTED HEREIN; AND BASED ON MY INQUIRY OF THOSE INDIVIDUALS IMMEDIATELY RESPONSIBLE FOR OBTAINING THE INFORMATION, I BELIEVE THE SUBMITTED INFORMATION IS TRUE, ACCURATE AND COMPLETE. I AM AWARE THAT THERE ARE SIGNIFICANT PENALTIES FOR SUBMITTING FALSE INFORMATION, INCLUDING THE POSSIBILITY OF FINE AND IMPRISONMENT. SEE 18 U.S.C. § 1001 AND 33 U.S.C. § 1319. *(Penalties under these statutes may include fines up to $10,000 and/or maximum imprisonment of between 6 months and 5 years.)*	405-270-2395	YEAR	MO	DAY
DIRECTOR PLANT OPERATIONS	SIGNATURE OF PRINCIPAL EXECUTIVE OFFICER OR AUTHORIZED AGENT	AREA CODE NUMBER	85	10	11
TYPED OR PRINTED					

COMMENT AND EXPLANATION OF ANY VIOLATIONS *(Reference all attachments here)*

PERMITTEE NAME/ADDRESS (Include Facility Name/Location if different)

NAME KERR-MCGEE

ADDRESS P.O. BOX906

COLUMBUS MS 39701

1680

FACILITY

LOCATION

Lowndes

NATIONAL POLLUTANT DISCHARGE ELIMINATION SYSTEM (NPDES)

DISCHARGE MONITORING REPORT (DMR)

Form Approved
OMB No. 2040-0004
Expires 2-29-84

(2-16) PERMIT NUMBER: 90021

(17-19) DISCHARGE NUMBER: 001

IND MSS

MONITORING PERIOD

	YEAR (20-21)	MO (22-23)	DAY (24-25)		YEAR (26-27)	MO (28-29)	DAY (30-31)
FROM	85	06	01	TO	85	07	01

NOTE: Read instructions before completing this form.

PARAMETER (32-37)		(3 Card Only) QUANTITY OR LOADING (46-53) AVERAGE	(54-61) MAXIMUM	UNITS	(4 Card Only) QUALITY OR CONCENTRATION (38-45) MINIMUM	(46-53) AVERAGE	(54-61) MAXIMUM	UNITS	NO. EX (62-63)	FREQUENCY OF ANALYSIS (64-68)	SAMPLE TYPE (69-70)
PH, EFFLUENT	SAMPLE MEASUREMENT	******	******	******	6.28	6.52	6.76			3/7	01 GRAB
000400	PERMIT REQUIREMENT	******	******	******	5.0	******	******	SU	***	3/7	GRA
OIL-GREASE	SAMPLE MEASUREMENT	.3166	.710		2.0	4.4	9.8			3/7	GRAB
00550	PERMIT REQUIREMENT	1.7	3.3	LBS/DA	******	50	100	MG/L	***	3/7	GRA
ARSENIC, TOTAL	SAMPLE MEASUREMENT	N/A	N/A		N/A	N/A	N/A			1/365	24 Hr COMP
001002	PERMIT REQUIREMENT	******	.13	LBS/DA	******	******	4	MG/L	***	1/365	24HR
CHROMIUM, TOTAL	SAMPLE MEASUREMENT	N/A	N/A		N/A	N/A	N/A			1/365	24 Hr COMP
001034	PERMIT REQUIREMENT	******	.13	LBS/DA	******	******	4	MG/L	***	1/365	24HR
COPPER, TOTAL	SAMPLE MEASUREMENT	N/A	N/A		N/A	N/A	N/A			1/365	24 Hr COMP
001042	PERMIT REQUIREMENT	******	.17	LBS/DA	******	******	5	MG/L	***	1/365	24HR
FLOW RATE	SAMPLE MEASUREMENT	.0086	.0345		******	******	******	******		1/1	00 Instant
50060	PERMIT REQUIREMENT	******	******	MG/DAY	******	******	******	******	***	1/1	INSTA
**********	SAMPLE MEASUREMENT	******	******	******	******	******	******	******		*****	******
**********		******	******	******	******	******	******	******		*****	******
**********	PERMIT REQUIREMENT	******	******	******	******	******	******	******	***	*****	******

NAME/TITLE PRINCIPAL EXECUTIVE OFFICER			TELEPHONE		DATE		
W. J. BROUSSARD Director-Plant Operations	I CERTIFY UNDER PENALTY OF LAW THAT I HAVE PERSONALLY EXAMINED AND AM FAMILIAR WITH THE INFORMATION SUBMITTED HEREIN; AND BASED ON MY INQUIRY OF THOSE INDIVIDUALS IMMEDIATELY RESPONSIBLE FOR OBTAINING THE INFORMATION, I BELIEVE THE SUBMITTED INFORMATION IS TRUE, ACCURATE AND COMPLETE. I AM AWARE THAT THERE ARE SIGNIFICANT PENALTIES FOR SUBMITTING FALSE INFORMATION, INCLUDING THE POSSIBILITY OF FINE AND IMPRISONMENT. SEE 18 U.S.C. § 1001 AND 33 U.S.C. § 1319. *(Penalties under these statutes may include fines up to $10,000 and/or maximum imprisonment of between 6 months and 5 years.)*	W. J. Broussard	405	270-2395	85	07	05
TYPED OR PRINTED		SIGNATURE OF PRINCIPAL EXECUTIVE OFFICER OR AUTHORIZED AGENT	AREA CODE	NUMBER	YEAR	MO	DAY

COMMENT AND EXPLANATION OF ANY VIOLATIONS *(Reference all attachments here)*

Facility Name/Location if different)

NAME KERR-MCGEE

ADDRESS P.O. BOX906

COLUMBUS MS 39701

1680

FACILITY

LOCATION

NATIONAL POLLUTANT DISCHARGE ELIMINATION SYSTEM (NPDES)

DISCHARGE MONITORING REPORT (DMR)

Form Approved
OMB No. 2040-0004
Expires 2-29-84

(2-16) PERMIT NUMBER: 0021

(17-19) DISCHARGE NUMBER: 001

MONITORING PERIOD

	YEAR (20-21)	MO (22-23)	DAY (24-25)		YEAR (26-27)	MO (28-29)	DAY (30-31)
FROM	85	05	01	TO	85	06	01

IND

MSS

NOTE: Read instructions before completing this form.

PARAMETER (32-37)		(3 Card Only) QUANTITY OR LOADING (46-53) AVERAGE	(54-61) MAXIMUM	UNITS	(4 Card Only) QUALITY OR CONCENTRATION (38-45) MINIMUM	(46-53) AVERAGE	(54-61) MAXIMUM	UNITS	NO. EX (62-63)	FREQUENCY OF ANALYSIS (64-68)	SAMPLE TYPE (69-70)
PH, EFFLUENT	SAMPLE MEASUREMENT	******	******	******	5.41	6.26	6.80			3/7	GRAB
000400	PERMIT REQUIREMENT	******	******	******	5.0	******	******	SU	***	3/7	GRA
OIL-GREASE	SAMPLE MEASUREMENT	.4930	1.733		4.0	6.8	11.0			3/7	GRAB
000550	PERMIT REQUIREMENT	1.7	3.3	LBS/DA	******	50	100	MG/L	***	3/7	GRA
ARSENIC, TOTAL	SAMPLE MEASUREMENT	N/A	N/A		N/A	N/A				1/365	24 Hr COMP
001002	PERMIT REQUIREMENT	******	.13	LBS/DA	******	******	4	MG/L	***	1/365	24HR
CHROMIUM, TOTAL	SAMPLE MEASUREMENT	N/A	N/A		N/A	N/A				1/365	24 Hr COMP
001034	PERMIT REQUIREMENT	******	.13	LBS/DA	******	******	4	MG/L	***	1/365	24HR
COPPER, TOTAL	SAMPLE MEASUREMENT	N/A	N/A		N/A	N/A				1/365	24 Hr COMP
001042	PERMIT REQUIREMENT	******	.17	LBS/DA	******	******	5	MG/L	***	1/365	24HR
FLOW RATE	SAMPLE MEASUREMENT	.0086	.0245		******	******	******	******		1/1	Instant
74060	PERMIT REQUIREMENT	******	******	MG/DAY	******	******	******	******	***	1/1	INSTA
**********	SAMPLE MEASUREMENT	******	******	******	******	******	******	******		******	******
**********		******	******	******	******	******	******	******		******	******
**********	PERMIT REQUIREMENT	******	******	******	******	******	******	******	***	******	******

NAME/TITLE PRINCIPAL EXECUTIVE OFFICER

W. J. BROUSSARD
Director-Plant Operations

TYPED OR PRINTED

I CERTIFY UNDER PENALTY OF LAW THAT I HAVE PERSONALLY EXAMINED AND AM FAMILIAR WITH THE INFORMATION SUBMITTED HEREIN; AND BASED ON MY INQUIRY OF THOSE INDIVIDUALS IMMEDIATELY RESPONSIBLE FOR OBTAINING THE INFORMATION, I BELIEVE THE SUBMITTED INFORMATION IS TRUE, ACCURATE AND COMPLETE. I AM AWARE THAT THERE ARE SIGNIFICANT PENALTIES FOR SUBMITTING FALSE INFORMATION, INCLUDING THE POSSIBILITY OF FINE AND IMPRISONMENT. SEE 18 U.S.C. § 1001 AND 33 U.S.C. § 1319. *(Penalties under these statutes may include fines up to $10,000 and/or maximum imprisonment of between 6 months and 5 years.)*

SIGNATURE OF PRINCIPAL EXECUTIVE OFFICER OR AUTHORIZED AGENT

TELEPHONE		DATE		
AREA CODE	NUMBER	YEAR	MO	DAY
405	270-2395	85	07	05

COMMENT AND EXPLANATION OF ANY VIOLATIONS *(Reference all attachments here)*

Facility Name/Location if different)

NAME KERR-MCGEE

ADDRESS P.O. BOX 906

COLUMBUS MS 39701

1680

FACILITY

LOCATION

NATIONAL POLLUTANT DISCHARGE ELIMINATION SYSTEM (NPDES)

DISCHARGE MONITORING REPORT (DMR)

Form Approved
OMB No. 2040-0004
Expires 2-29-84

(2-16) PERMIT NUMBER: 90021

(17-19) DISCHARGE NUMBER: 001

IND WSS

MONITORING PERIOD

	YEAR (20-21)	MO (22-23)	DAY (24-25)		YEAR (26-27)	MO (28-29)	DAY (30-31)
FROM	85	04	01	TO	85	05	01

NOTE: Read instructions before completing this form.

PARAMETER (32-37)		(3 Card Only) QUANTITY OR LOADING (46-53) AVERAGE	(54-61) MAXIMUM	UNITS	(4 Card Only) QUALITY OR CONCENTRATION (38-45) MINIMUM	(46-53) AVERAGE	(54-61) MAXIMUM	UNITS	NO. EX (62-63)	FREQUENCY OF ANALYSIS (64-68)	SAMPLE TYPE (69-70)
PH, EFFLUENT	SAMPLE MEASUREMENT	****** ******	****** ******	****** ******	5.28	6.0	6.69			3/7	GRAB
000400	PERMIT REQUIREMENT	******	******	******	5.0	******	******	SU	***	3/7	GRA
OIL-GREASE	SAMPLE MEASUREMENT	.6272	2.3		3.5	5.8	12.0			3/7	GRAB
000550	PERMIT REQUIREMENT	1.7	3.3	LBS/DA	******	50	100	MG/L	***	3/7	GRA
ARSENIC, TOTAL	SAMPLE MEASUREMENT	N/A	N/A		N/A	N/A	N/A			1/365	24 Hr COMP
001002	PERMIT REQUIREMENT	******	.13	LBS/DA	******	******	4	MG/L	***	1/365	24HR
CHROMIUM, TOTAL	SAMPLE MEASUREMENT	N/A	N/A		N/A	N/A	N/A			1/365	24 Hr COMP
001034	PERMIT REQUIREMENT	******	.13	LBS/DA	******	******	4	MG/L	***	1/365	24HR
COPPER, TOTAL	SAMPLE MEASUREMENT	N/A	N/A		N/A	N/A	N/A			1/365	24 Hr COMP
001042	PERMIT REQUIREMENT	******	.17	LBS/DA	******	******	5	MG/L	***	1/365	24HR
FLOW RATE	SAMPLE MEASUREMENT	.0129	10346		****** ******	****** ******	****** ******	****** ******		1/1	Instant
4060	PERMIT REQUIREMENT	******	******	MG/DAY	******	******	******	******	***	1/1	INSTA
********** ********** **********	SAMPLE MEASUREMENT	****** ******	****** ******	****** ******	****** ******	****** ******	****** ******	****** ******		****** ******	****** ******
	PERMIT REQUIREMENT	******	******	******	******	******	******	******	***	******	******

NAME/TITLE PRINCIPAL EXECUTIVE OFFICER

W. J. BROUSSARD
Director-Plant Operations

TYPED OR PRINTED

I CERTIFY UNDER PENALTY OF LAW THAT I HAVE PERSONALLY EXAMINED AND AM FAMILIAR WITH THE INFORMATION SUBMITTED HEREIN; AND BASED ON MY INQUIRY OF THOSE INDIVIDUALS IMMEDIATELY RESPONSIBLE FOR OBTAINING THE INFORMATION, I BELIEVE THE SUBMITTED INFORMATION IS TRUE, ACCURATE AND COMPLETE. I AM AWARE THAT THERE ARE SIGNIFICANT PENALTIES FOR SUBMITTING FALSE INFORMATION, INCLUDING THE POSSIBILITY OF FINE AND IMPRISONMENT. SEE 18 U.S.C. § 1001 AND 33 U.S.C. § 1319. *(Penalties under these statutes may include fines up to $10,000 and/or maximum imprisonment of between 6 months and 5 years.)*

SIGNATURE OF PRINCIPAL EXECUTIVE OFFICER OR AUTHORIZED AGENT

TELEPHONE		DATE		
405	270-2395	85	07	05
AREA CODE	NUMBER	YEAR	MO	DAY

COMMENT AND EXPLANATION OF ANY VIOLATIONS *(Reference all attachments here)*

PERMITTEE NAME/ADDRESS (*Include Facility Name/Location if different*)

NAME KERR-MCGEE

ADDRESS P.O. BOX906

COLUMBUS MS 39701

1680

FACILITY

LOCATION

NATIONAL POLLUTANT DISCHARGE ELIMINATION SYSTEM (NPDES)

DISCHARGE MONITORING REPORT (DMR)

OMB No. 2040-0
Expires 2-29-84

(2-16) PERMIT NUMBER: 90021

(17-19) DISCHARGE NUMBER: 001

IND MSS

MONITORING PERIOD

	YEAR (20-21)	MO (22-23)	DAY (24-25)		YEAR (26-27)	MO (28-29)	DAY (30-31)
FROM	85	03	01	TO	85	04	01

NOTE: Read instructions before completing this form.

PARAMETER (32-37)		(3 Card Only) QUANTITY OR LOADING (46-53) AVERAGE	(54-61) MAXIMUM	UNITS	(4 Card Only) QUALITY OR CONCENTRATION (38-45) MINIMUM	(46-53) AVERAGE	(54-61) MAXIMUM	UNITS	NO. EX (62-63)	FREQUENCY OF ANALYSIS (64-68)	SAMPLE TYPE (69-70)
PH, EFFLUENT	SAMPLE MEASUREMENT	******	******	******	6.01	6.60	6.87			3/7	Grab
000400	PERMIT REQUIREMENT	******	******	******	5.0	******	******	SU	***	3/7	GRA
OIL-GREASE	SAMPLE MEASUREMENT	.403	1.58		5.0	8.4	11.5			3/7	Grab
000550	PERMIT REQUIREMENT	1.7	3.3	LBS/DA	******	50	100	MG/L	***	3/7	GRA
ARSENIC, TOTAL	SAMPLE MEASUREMENT	N/A	N/A		N/A	N/A	N/A			1/365	24 Hr Comp
001002	PERMIT REQUIREMENT	******	.13	LBS/DA	******	******	4	MG/L	***	1/365	24HR
CHROMIUM, TOTAL	SAMPLE MEASUREMENT	N/A	N/A		N/A	N/A	N/A			1/365	24 Hr Comp
001034	PERMIT REQUIREMENT	******	.13	LBS/DA	******	******	4	MG/L	***	1/365	24HR
COPPER, TOTAL	SAMPLE MEASUREMENT	N/A	N/A		N/A	N/A	N/A			1/365	24 Hr Comp
001042	PERMIT REQUIREMENT	******	.17	LBS/DA	******	******	5	MG/L	***	1/365	24HR
FLOW RATE	SAMPLE MEASUREMENT	.0058	.0173		******	******	******	******		1/1	Instant
4060	PERMIT REQUIREMENT	******	******	MG/DAY	******	******	******	******	***	1/1	INSTA
**********	SAMPLE MEASUREMENT	******	******	******	******	******	******	******		******	******
**********	PERMIT REQUIREMENT	******	******	******	******	******	******	******	***	******	******

NAME/TITLE PRINCIPAL EXECUTIVE OFFICER

W. J. Broussard
Director-Plant Operations

TYPED OR PRINTED

I CERTIFY UNDER PENALTY OF LAW THAT I HAVE PERSONALLY EXAMINED AND AM FAMILIAR WITH THE INFORMATION SUBMITTED HEREIN; AND BASED ON MY INQUIRY OF THOSE INDIVIDUALS IMMEDIATELY RESPONSIBLE FOR OBTAINING THE INFORMATION, I BELIEVE THE SUBMITTED INFORMATION IS TRUE, ACCURATE AND COMPLETE. I AM AWARE THAT THERE ARE SIGNIFICANT PENALTIES FOR SUBMITTING FALSE INFORMATION, INCLUDING THE POSSIBILITY OF FINE AND IMPRISONMENT. SEE 18 U.S.C. § 1001 AND 33 U.S.C. § 1319. *(Penalties under these statutes may include fines up to $10,000 and/or maximum imprisonment of between 6 months and 5 years.)*

SIGNATURE OF PRINCIPAL EXECUTIVE OFFICER OR AUTHORIZED AGENT

TELEPHONE: AREA CODE 405 | NUMBER 270-2395

DATE: YEAR 85 | MO 04 | DAY 17

COMMENT AND EXPLANATION OF ANY VIOLATIONS (*Reference all attachments here*)

Facility Name /Location if different)

NAME KERR-MCGEE

ADDRESS P.O. BOX906

COLUMBUS MS 39701

1680

FACILITY

LOCATION

NATIONAL POLLUTANT DISCHARGE ELIMINATION SYSTEM (NPDES)

DISCHARGE MONITORING REPORT (DMR)

BB Form Approved
OMB No. 2040-0004
Expires 2-29-84

WSS

(2-16) PERMIT NUMBER: 90021

(17-19) DISCHARGE NUMBER: 001

IND WSS

MONITORING PERIOD

FROM YEAR (20-21)	MO (22-23)	DAY (24-25)	TO YEAR (26-27)	MO (28-29)	DAY (30-31)
85	02	01	85	03	01

NOTE: Read instructions before completing this form.

PARAMETER (32-37)		(3 Card Only) QUANTITY OR LOADING (46-53) AVERAGE	(54-61) MAXIMUM	UNITS	(4 Card Only) QUALITY OR CONCENTRATION (38-45) MINIMUM	(46-53) AVERAGE	(54-61) MAXIMUM	UNITS	NO. EX (62-63)	FREQUENCY OF ANALYSIS (64-68)	SAMPLE TYPE (69-70)
PH, EFFLUENT	SAMPLE MEASUREMENT	******	******	******	5.24	6.08	6.69			3/7	01 Grab
000400	PERMIT REQUIREMENT	******	******	******	5.0	******	******	SU	***	3/7	GR
OIL-GREASE	SAMPLE MEASUREMENT	.7373	2.16		5.0	6.8	9.3			3/7	Grab
000550	PERMIT REQUIREMENT	1.7	3.3	LBS/DA	******	50	100	MG/L	***	3/7	GRA
ARSENIC, TOTAL	SAMPLE MEASUREMENT	N/A	N/A		N/A	N/A	N/A			1/365	24 Hr Comp
001002	PERMIT REQUIREMENT	******	.13	LBS/DA	******	******	4	MG/L	***	1/365	24HR
CHROMIUM, TOTAL	SAMPLE MEASUREMENT	N/A	N/A		N/A	N/A	N/A			1/365	24 Hr Comp
001034	PERMIT REQUIREMENT	******	.13	LBS/DA	******	******	4	MG/L	***	1/365	24HR
COPPER, TOTAL	SAMPLE MEASUREMENT	N/A	N/A		N/A	N/A	N/A			1/365	24 Hr Comp
001042	PERMIT REQUIREMENT	******	.17	LBS/DA	******	******	5	MG/L	***	1/365	24HR
FLOW RATE	SAMPLE MEASUREMENT	.0130	.0432		****** ******	****** ******	****** ******	****** ******		1/1	00 Instant
4060	PERMIT REQUIREMENT	******	******	MG/DAY	******	******	******	**********		1/1	INSTA
********** ********** **********	SAMPLE MEASUREMENT	****** ******	****** ******	****** ******	****** ******	****** ******	****** ******	****** ******		****** ******	****** ******
	PERMIT REQUIREMENT	******	******	******	******	******	******	**********	***	******	******

NAME/TITLE PRINCIPAL EXECUTIVE OFFICER

W. J. Broussard
Director-Plant Operations

TYPED OR PRINTED

I CERTIFY UNDER PENALTY OF LAW THAT I HAVE PERSONALLY EXAMINED AND AM FAMILIAR WITH THE INFORMATION SUBMITTED HEREIN; AND BASED ON MY INQUIRY OF THOSE INDIVIDUALS IMMEDIATELY RESPONSIBLE FOR OBTAINING THE INFORMATION, I BELIEVE THE SUBMITTED INFORMATION IS TRUE, ACCURATE AND COMPLETE. I AM AWARE THAT THERE ARE SIGNIFICANT PENALTIES FOR SUBMITTING FALSE INFORMATION, INCLUDING THE POSSIBILITY OF FINE AND IMPRISONMENT. SEE 18 U.S.C. § 1001 AND 33 U.S.C. § 1319. *(Penalties under these statutes may include fines up to $10,000 and/or maximum imprisonment of between 6 months and 5 years.)*

SIGNATURE OF PRINCIPAL EXECUTIVE OFFICER OR AUTHORIZED AGENT

TELEPHONE: AREA CODE 405 NUMBER 270-2395

DATE: YEAR 85 MO 04 DAY 17

COMMENT AND EXPLANATION OF ANY VIOLATIONS *(Reference all attachments here)*

Facility Name/Location if different)

NAME KERR-MCGEE

ADDRESS P.O. BOX 906

COLUMBUS MS 39701

1680

FACILITY

LOCATION

NATIONAL POLLUTANT DISCHARGE ELIMINATION SYSTEM (NPDES)

DISCHARGE MONITORING REPORT (DMR)

Form Approved
OMB No. 2040-0004
Expires 2-29-84

(2-16) PERMIT NUMBER: 90021

(17-19) DISCHARGE NUMBER: 001

MONITORING PERIOD

	YEAR (20-21)	MO (22-23)	DAY (24-25)		YEAR (26-27)	MO (28-29)	DAY (30-31)
FROM	85	01	01	TO	85	02	01

IND WSS

NOTE: Read instructions before completing this form.

PARAMETER (32-37)		(3 Card Only) QUANTITY OR LOADING (46-53) AVERAGE	(54-61) MAXIMUM	UNITS	(4 Card Only) QUALITY OR CONCENTRATION (38-45) MINIMUM	(46-53) AVERAGE	(54-61) MAXIMUM	UNITS	NO. EX (62-63)	FREQUENCY OF ANALYSIS (64-68)	SAMPLE TYPE (69-70)
PH, EFFLUENT	SAMPLE MEASUREMENT	****** ******	****** ******	****** ******	5.85	6.08	6.39			3/7	Grab
000400	PERMIT REQUIREMENT	******	******	******	6.0	******	******	SU	**	3/7	GR
OIL-GREASE	SAMPLE MEASUREMENT	.429	1.22		5.9	8.95	16.6			3/7	Grab
000550	PERMIT REQUIREMENT	1.7	3.3	LBS/DA	******	50	100	MG/L	**	3/7	GRA
ARSENIC, TOTAL	SAMPLE MEASUREMENT	N/A	N/A		N/A	N/A	N/A			1/365	24 Hr Comp
001002	PERMIT REQUIREMENT	******	.13	LBS/DA	******	******	4	MG/L	**	1/365	24HR
CHROMIUM, TOTAL	SAMPLE MEASUREMENT	N/A	N/A		N/A	N/A	N/A			1/365	24 Hr Comp
001034	PERMIT REQUIREMENT	******	.13	LBS/DA	******	******	4	MG/L	**	1/365	24HR
COPPER, TOTAL	SAMPLE MEASUREMENT	N/A	N/A		N/A	N/A	N/A			1/365	24 Hr Comp
001042	PERMIT REQUIREMENT	******	.17	LBS/DA	******	******	5	MG/L	**	1/365	24HR
FLOW RATE	SAMPLE MEASUREMENT	.0058	.0244		****** ******	****** ******	****** ******	****** ******		1/1	Instant
74060	PERMIT REQUIREMENT	******	******	MG/DAY	******	******	******	******	**	1/1	INSTA
********** ********** **********	SAMPLE MEASUREMENT	****** ******	****** ******	****** ******	****** ******	****** ******	****** ******	****** ******		**********	
	PERMIT REQUIREMENT	******	******	******	******	******	******	******	**	**********	

NAME/TITLE PRINCIPAL EXECUTIVE OFFICER

W. J. Broussard
Director-Plant Operations

TYPED OR PRINTED

I CERTIFY UNDER PENALTY OF LAW THAT I HAVE PERSONALLY EXAMINED AND AM FAMILIAR WITH THE INFORMATION SUBMITTED HEREIN; AND BASED ON MY INQUIRY OF THOSE INDIVIDUALS IMMEDIATELY RESPONSIBLE FOR OBTAINING THE INFORMATION, I BELIEVE THE SUBMITTED INFORMATION IS TRUE, ACCURATE AND COMPLETE. I AM AWARE THAT THERE ARE SIGNIFICANT PENALTIES FOR SUBMITTING FALSE INFORMATION, INCLUDING THE POSSIBILITY OF FINE AND IMPRISONMENT. SEE 18 U.S.C. § 1001 AND 33 U.S.C. § 1319. *(Penalties under these statutes may include fines up to $10,000 and/or maximum imprisonment of between 6 months and 5 years.)*

W. J. Broussard

SIGNATURE OF PRINCIPAL EXECUTIVE OFFICER OR AUTHORIZED AGENT

TELEPHONE		DATE		
AREA CODE	NUMBER	YEAR	MO	DAY
405	270-2395	85	04	17

COMMENT AND EXPLANATION OF ANY VIOLATIONS *(Reference all attachments here)*

Form Approved
OMB No. 2000-0015

PERMITTEE NAME/ADDRESS (*Include Facility Name/Location if different*)

NAME KERR-MCGEE (Lourdes)
ADDRESS P.O. BOX906
COLUMBUS MS 39701
1680
FACILITY
LOCATION

NATIONAL POLLUTANT DISCHARGE ELIMINATION SYSTEM (*NPDES*)
DISCHARGE MONITORING REPORT (*DMR*)

(2-16) PERMIT NUMBER	(17-19) DISCHARGE NUMBER
90021	001

IND

1984

MONITORING PERIOD

	YEAR (20-21)	MO (22-23)	DAY (24-25)		YEAR (26-27)	MO (28-29)	DAY (30-31)
FROM	84	12	01	TO	85	01	01

NOTE: Read instructions before completing this form.

PARAMETER (32-37)		(3 Card Only) QUANTITY OR LOADING (46-53) AVERAGE	(54-61) MAXIMUM	UNITS	(4 Card Only) QUALITY OR CONCENTRATION (38-45) MINIMUM	(46-53) AVERAGE	(54-61) MAXIMUM	UNITS	NO. EX (62-63)	FREQUENCY OF ANALYSIS (64-68)	SAMPLE TYPE (69-70)
PH, EFFLUENT	SAMPLE MEASUREMENT	******	******	******	6.03	******	******	**********		3/7	grab 01
000400	PERMIT REQUIREMENT	******	******	******	******	******	******	**********		3/7	GRAB
-GREASE	SAMPLE MEASUREMENT	.878	1.69		7.9	12.2	35.2			3/7	grab
000550	PERMIT REQUIREMENT	1.7	3.3	LBS/DA	******	50	100	MG/L		3/7	GRAB
ARSENIC, TOTAL	SAMPLE MEASUREMENT	N/A	N/A		N/A	N/A	N/A			1/365	24 comp 10
001002	PERMIT REQUIREMENT	******	.13	LBS/DA	******	******	4	MG/L		1/365	24HR C
CHROMIUM, TOTAL	SAMPLE MEASUREMENT	N/A	N/A		N/A	N/A	N/A			1/365	24 comp
001034	PERMIT REQUIREMENT	******	.13	LBS/DA	******	******	4	MG/L		1/365	24HR C
COPPER, TOTAL	SAMPLE MEASUREMENT	N/A	N/A		N/A	N/A	N/A			1/365	24 com
001042	PERMIT REQUIREMENT	******	.17	LBS/DA	******	******	5	MG/L		1/365	24HR C
FLOW RATE	SAMPLE MEASUREMENT	.0086	0.0129		******	******	******	******		1/1	instant 00
074050	PERMIT REQUIREMENT	******	******	MG/DAY	******	******	******	**********		1/1	INSTA
**********	SAMPLE MEASUREMENT	******	******	******	******	******	******	******		**********	**********
**********		******	******	******	******	******	******	******		**********	**********
**********	PERMIT REQUIREMENT	******	******	******	******	******	******	**********		**********	**********

NAME/TITLE PRINCIPAL EXECUTIVE OFFICER

W.J. Broussard
Director-Plant Operations

TYPED OR PRINTED

I CERTIFY UNDER PENALTY OF LAW THAT I HAVE PERSONALLY EXAMINED AND AM FAMILIAR WITH THE INFORMATION SUBMITTED HEREIN; AND BASED ON MY INQUIRY OF THOSE INDIVIDUALS IMMEDIATELY RESPONSIBLE FOR OBTAINING THE INFORMATION, I BELIEVE THE SUBMITTED INFORMATION IS TRUE, ACCURATE AND COMPLETE. I AM AWARE THAT THERE ARE SIGNIFICANT PENALTIES FOR SUBMITTING FALSE INFORMATION, INCLUDING THE POSSIBILITY OF FINE AND IMPRISONMENT. SEE 18 U.S.C. § 1001 AND 33 U.S.C § 1319. *(Penalties under these statutes may include fines up to $10,000 and/or maximum imprisonment of between 6 months and 5 years.)*

W.J. Broussard

SIGNATURE OF PRINCIPAL EXECUTIVE OFFICER OR AUTHORIZED AGENT

TELEPHONE		DATE		
AREA CODE	NUMBER	YEAR	MO	DAY
405	270-2395	85	01	11

COMMENT AND EXPLANATION OF ANY VIOLATIONS (*Reference all attachments here*)

PERMITTEE NAME/ADDRESS (*Include Facility Name/Location if different*)

NAME KERR-MCGEE

ADDRESS P.O. BOX906

COLUMBUS MS 39701

1680

FACILITY

LOCATION

NATIONAL POLLUTANT DISCHARGE ELIMINATION SYSTEM (*NPDES*)

DISCHARGE MONITORING REPORT (*DMR*)

80 *Form Approved OMB No. 2000-0015*

(2-16)	(17-19)
90021	001
PERMIT NUMBER	DISCHARGE NUMBER

RECEIVED IND

1985 FEB -6 AM 9:24

MONITORING PERIOD	YEAR	MO	DAY		YEAR	MO	DAY
FROM	84	11	01	TO	84	12	01
	(20-21)	(22-23)	(24-25)		(26-27)	(28-29)	(30-31)

NOTE: Read instructions before completing this form.

PARAMETER (32-37)		(3 Card Only) QUANTITY OR LOADING (46-53) AVERAGE	(54-61) MAXIMUM	UNITS	(4 Card Only) QUALITY OR CONCENTRATION (38-45) MINIMUM	(46-53) AVERAGE	(54-61) MAXIMUM	UNITS	NO. EX (62-63)	FREQUENCY OF ANALYSIS (64-68)	SAMPLE TYPE (69-70)
PH, EFFLUENT	SAMPLE MEASUREMENT	******	******	******	6.06	******	******	******	******	3/7	grab 01
000400	PERMIT REQUIREMENT	******	******	******	******	******	******	******	******	3/7	GRAB
OIL-GREASE	SAMPLE MEASUREMENT	0.63	1.57		6.8	8.7	13.2			3/7	grab
000550	PERMIT REQUIREMENT	1.7	3.3	LBS/DA	******	50	100	MG/L	***	3/7	GRAB
ARSENIC, TOTAL	SAMPLE MEASUREMENT	N/A	N/A		N/A	N/A	N/A			1/365	24 comp. 10
001002	PERMIT REQUIREMENT	******	.13	LBS/DA	******	******	4	MG/L	***	1/365	24HR C
CHROMIUM, TOTAL	SAMPLE MEASUREMENT	N/A	N/A		N/A	N/A	N/A			1/365	24 comp.
001034	PERMIT REQUIREMENT	******	.13	LBS/DA	******	******	4	MG/L	***	1/365	24HR C
COPPER, TOTAL	SAMPLE MEASUREMENT	N/A	N/A		N/A	N/A	N/A			1/365	24 comp
001042	PERMIT REQUIREMENT	******	.17	LBS/DA	******	******	5	MG/L	***	1/365	24HR C
FLOW RATE	SAMPLE MEASUREMENT	.0086	.0244		******	******	******	******		1/1 ~~1/1~~	instant 00
074060	PERMIT REQUIREMENT	******	******	MG/DAY	******	******	******	******	******	1/1	INSTA
**********	SAMPLE MEASUREMENT	******	******	******	******	******	******	******		******	******
**********	PERMIT REQUIREMENT	******	******	******	******	******	******	******	******	******	******

NAME/TITLE PRINCIPAL EXECUTIVE OFFICER		TELEPHONE		DATE		
W.J. Broussard Director-Plant Operations	I CERTIFY UNDER PENALTY OF LAW THAT I HAVE PERSONALLY EXAMINED AND AM FAMILIAR WITH THE INFORMATION SUBMITTED HEREIN; AND BASED ON MY INQUIRY OF THOSE INDIVIDUALS IMMEDIATELY RESPONSIBLE FOR OBTAINING THE INFORMATION, I BELIEVE THE SUBMITTED INFORMATION IS TRUE, ACCURATE AND COMPLETE. I AM AWARE THAT THERE ARE SIGNIFICANT PENALTIES FOR SUBMITTING FALSE INFORMATION, INCLUDING THE POSSIBILITY OF FINE AND IMPRISONMENT. SEE 18 U.S.C. § 1001 AND 33 U.S.C § 1319. *(Penalties under these statutes may include fines up to $10,000 and/or maximum imprisonment of between 6 months and 5 years.)*	[signature]	405	270-2395	85	01	11
TYPED OR PRINTED		SIGNATURE OF PRINCIPAL EXECUTIVE OFFICER OR AUTHORIZED AGENT	AREA CODE	NUMBER	YEAR	MO	DAY

COMMENT AND EXPLANATION OF ANY VIOLATIONS (*Reference all attachments here*)

Form Approved
OMB No. 2000-0015

PERMITTEE NAME/ADDRESS (*Include Facility Name/Location if different*)

NAME KERR-MCGEE
ADDRESS P.O. BOX906
COLUMBUS MS 39701
1680
FACILITY
LOCATION

NATIONAL POLLUTANT DISCHARGE ELIMINATION SYSTEM (*NPDES*)
DISCHARGE MONITORING REPORT (*DMR*)

(2-16) PERMIT NUMBER	(17-19) DISCHARGE NUMBER
90021	001

IND

MONITORING PERIOD

	YEAR	MO	DAY		YEAR	MO	DAY
FROM	84	10	01	TO	84	11	01
	(20-21)	(22-23)	(24-25)		(26-27)	(28-29)	(30-31)

NOTE: Read instructions before completing this form.

PARAMETER (32-37)		(3 Card Only) QUANTITY OR LOADING (46-53) AVERAGE	(54-61) MAXIMUM	UNITS	(4 Card Only) QUALITY OR CONCENTRATION (38-45) MINIMUM	(46-53) AVERAGE	(54-61) MAXIMUM	UNITS	NO. EX (62-63)	FREQUENCY OF ANALYSIS (64-68)	SAMPLE TYPE (69-70)
PH, EFFLUENT	SAMPLE MEASUREMENT	******	******	******	6.22	******	******	**********		3/7	01 grab
000400	PERMIT REQUIREMENT	******	******	******	******	******	******	**********		3/7	GRAB
-GREASE	SAMPLE MEASUREMENT	1.07	2.52		6.9	10.0	14.0			3/7	grab
000550	PERMIT REQUIREMENT	1.7	3.3	LBS/DA	******	50	100	MG/L		3/7	GRAB
ARSENIC, TOTAL	SAMPLE MEASUREMENT	N/A	N/A		N/A	N/A	N/A			1/365	24 comp.
001002	PERMIT REQUIREMENT	******	.13	LBS/DA	******	******	4	MG/L		1/365	24HR C
CHROMIUM, TOTAL	SAMPLE MEASUREMENT	N/A	N/A		N/A	N/A	N/A			1/365	24 comp.
001034	PERMIT REQUIREMENT	******	.13	LBS/DA	******	******	4	MG/L		1/365	24HR C
COPPER, TOTAL	SAMPLE MEASUREMENT	N/A	N/A		N/A	N/A	N/A			1/365	24 comp.
001042	PERMIT REQUIREMENT	******	.17	LBS/DA	******	******	5	MG/L		1/365	24HR C
FLOW RATE	SAMPLE MEASUREMENT	.0130	.0432		******	******	******	******		1/1	00 instant
074060	PERMIT REQUIREMENT	******	******	MG/DAY	******	******	******	**********		1/1	INSTAN
**********	SAMPLE MEASUREMENT	******	******	******	******	******	******	******		**********	**********
**********	SAMPLE MEASUREMENT	******	******	******	******	******	******	******		**********	**********
**********	PERMIT REQUIREMENT	******	******	******	******	******	******	**********		**********	**********

NAME/TITLE PRINCIPAL EXECUTIVE OFFICER

W.J. Broussard
Director-Plant Operations

TYPED OR PRINTED

I CERTIFY UNDER PENALTY OF LAW THAT I HAVE PERSONALLY EXAMINED AND AM FAMILIAR WITH THE INFORMATION SUBMITTED HEREIN; AND BASED ON MY INQUIRY OF THOSE INDIVIDUALS IMMEDIATELY RESPONSIBLE FOR OBTAINING THE INFORMATION, I BELIEVE THE SUBMITTED INFORMATION IS TRUE, ACCURATE AND COMPLETE. I AM AWARE THAT THERE ARE SIGNIFICANT PENALTIES FOR SUBMITTING FALSE INFORMATION, INCLUDING THE POSSIBILITY OF FINE AND IMPRISONMENT. SEE 18 U.S.C. § 1001 AND 33 U.S.C § 1319. *(Penalties under these statutes may include fines up to $10,000 and/or maximum imprisonment of between 6 months and 5 years.)*

SIGNATURE OF PRINCIPAL EXECUTIVE OFFICER OR AUTHORIZED AGENT

TELEPHONE

AREA CODE	NUMBER
405	270-2395

DATE

YEAR	MO	DAY
85	01	11

COMMENT AND EXPLANATION OF ANY VIOLATIONS (*Reference all attachments here*)

Form Approved
OMB No. 2000-0015

PERMITTEE NAME/ADDRESS (*Include Facility Name/Location if different*)
NAME KERR-MCGEE
ADDRESS P.O. BOX906
COLUMBUS MS 39701
1680
FACILITY
LOCATION

Lowndes

NATIONAL POLLUTANT DISCHARGE ELIMINATION SYSTEM (*NPDES*)
DISCHARGE MONITORING REPORT (*DMR*)

(2-16) PERMIT NUMBER: 90021
(17-19) DISCHARGE NUMBER: 001

IND

MONITORING PERIOD

	YEAR	MO	DAY		YEAR	MO	DAY
FROM	84	09	01	TO	84	10	01
	(20-21)	(22-23)	(24-25)		(26-27)	(28-29)	(30-31)

NOTE: Read instructions before completing this form.

PARAMETER (32-37)		(3 Card Only) QUANTITY OR LOADING (46-53) AVERAGE	(54-61) MAXIMUM	UNITS	(4 Card Only) (38-45) QUALITY OR CONCENTRATION MINIMUM	(46-53) AVERAGE	(54-61) MAXIMUM	UNITS	NO. EX (62-63)	FREQUENCY OF ANALYSIS (64-68)	SAMPLE TYPE (69-70)
PH, EFFLUENT	SAMPLE MEASUREMENT	******	******	******		******	******	**********			01
		******	******	******	6.33	******	******	**********		3/7	grab
000400	PERMIT REQUIREMENT	******	******	******	******	******	******	**********		3/7	GRAB
[redacted]-GREASE	SAMPLE MEASUREMENT	.67	1.51		8.0	14.0	24.0			3/7	grab
000550	PERMIT REQUIREMENT	1.7	3.3	LBS/DA	******	50	100	MG/L	***	3/7	GRAB
ARSENIC, TOTAL	SAMPLE MEASUREMENT	N/A	N/A		N/A	N/A	N/A			1/365	10 24hour
001002	PERMIT REQUIREMENT	******	.13	LBS/DA	******	******	4	MG/L	***	1/365	24HR C
CHROMIUM, TOTAL	SAMPLE MEASUREMENT	N/A	N/A		N/A	N/A	N/A			1/365	24hour
001034	PERMIT REQUIREMENT	******	.13	LBS/DA	******	******	4	MG/L	***	1/365	24HR C
COPPER, TOTAL	SAMPLE MEASUREMENT	N/A	N/A		N/A	N/A	N/A			1/365	24hour
001042	PERMIT REQUIREMENT	******	.17	LBS/DA	******	******	5	MG/L	***	1/365	24HR C
FLOW RATE	SAMPLE MEASUREMENT	.0058	.0130		******	******	******	******		1/1	00 instan
[redacted]4060	PERMIT REQUIREMENT	******	******	MG/DAY	******	******	******	**********		1/1	INSTA
**********	SAMPLE MEASUREMENT	******	******	******	******	******	******	******		******	******
**********		******	******	******	******	******	******	******		******	******
**********	PERMIT REQUIREMENT	******	******	******	******	******	******	**********		******	******

NAME/TITLE PRINCIPAL EXECUTIVE OFFICER		TELEPHONE		DATE		
W.J. Broussard Director-Plant operations	I CERTIFY UNDER PENALTY OF LAW THAT I HAVE PERSONALLY EXAMINED AND AM FAMILIAR WITH THE INFORMATION SUBMITTED HEREIN; AND BASED ON MY INQUIRY OF THOSE INDIVIDUALS IMMEDIATELY RESPONSIBLE FOR OBTAINING THE INFORMATION, I BELIEVE THE SUBMITTED INFORMATION IS TRUE, ACCURATE AND COMPLETE. I AM AWARE THAT THERE ARE SIGNIFICANT PENALTIES FOR SUBMITTING FALSE INFORMATION, INCLUDING THE POSSIBILITY OF FINE AND IMPRISONMENT. SEE 18 U.S.C. § 1001 AND 33 U.S.C § 1319. *(Penalties under these statutes may include fines up to $10,000 and/or maximum imprisonment of between 6 months and 5 years.)*	SIGNATURE OF PRINCIPAL EXECUTIVE OFFICER OR AUTHORIZED AGENT	AREA CODE 405	NUMBER 270-2395	YEAR 84	MO 10	DAY 01
TYPED OR PRINTED						

COMMENT AND EXPLANATION OF ANY VIOLATIONS (*Reference all attachments here*)

Form Approved
OMB No. 2000-0015

PERMITTEE NAME/ADDRESS (*Include Facility Name/Location if different*)

NAME KERR-MCGEE

ADDRESS P.O. BOX906
COLUMBUS MS 39701
1680

FACILITY

LOCATION

NATIONAL POLLUTANT DISCHARGE ELIMINATION SYSTEM (*NPDES*)
DISCHARGE MONITORING REPORT (*DMR*)

(2-16) PERMIT NUMBER: 90021

(17-19) DISCHARGE NUMBER: 001

IND

MONITORING PERIOD

	YEAR	MO	DAY		YEAR	MO	DAY
FROM	84	08	01	TO	84	09	01
	(20-21)	(22-23)	(24-25)		(26-27)	(28-29)	(30-31)

NOTE: Read instructions before completing this form.

PARAMETER (32-37)		(3 Card Only) QUANTITY OR LOADING (46-53) AVERAGE	(54-61) MAXIMUM	UNITS	(4 Card Only) QUALITY OR CONCENTRATION (38-45) MINIMUM	(46-53) AVERAGE	(54-61) MAXIMUM	UNITS	NO. EX (62-63)	FREQUENCY OF ANALYSIS (64-68)	SAMPLE TYPE (69-70)
PH, EFFLUENT	SAMPLE MEASUREMENT	******	******	******	6.25	******	******	**********		3/7	grab 01
000400	PERMIT REQUIREMENT	******	******	******	******	******	******	**********		3/7	GRAB
-GREASE	SAMPLE MEASUREMENT	.98	1.9		3.2	13.7	33.40			3/7	grab
000550	PERMIT REQUIREMENT	1.7	3.3	LBS/DA	******	50	100	MG/L		3/7	GRAB
ARSENIC, TOTAL	SAMPLE MEASUREMENT	N/A	N/A		N/A	N/A	N/A			1/365	24hour 10 c
001002	PERMIT REQUIREMENT	******	.13	LBS/DA	******	******	4	MG/L		1/365	24HR C
CHROMIUM, TOTAL	SAMPLE MEASUREMENT	N/A	N/A		N/A	N/A	N/A			1/365	24hour c
001034	PERMIT REQUIREMENT	******	.13	LBS/DA	******	******	4	MG/L		1/365	24HR C
COPPER, TOTAL	SAMPLE MEASUREMENT	N/A	N/A		N/A	N/A	N/A			1/365	24hour c
001042	PERMIT REQUIREMENT	******	.17	LBS/DA	******	******	5	MG/L		1/365	24HR C
FLOW RATE	SAMPLE MEASUREMENT	.0086	.0173		******	******	******	******		1/1	instant 00
074060	PERMIT REQUIREMENT	******	******	MG/DAY	******	******	******	**********		1/1	INSTAN
**********	SAMPLE MEASUREMENT	******	******	******	******	******	******	******		******	******
**********		******	******	******	******	******	******	******		******	******
**********	PERMIT REQUIREMENT	******	******	******	******	******	******	**********		******	******

NAME/TITLE PRINCIPAL EXECUTIVE OFFICER

W.J. Broussard
Director-Plant Operations

TYPED OR PRINTED

I CERTIFY UNDER PENALTY OF LAW THAT I HAVE PERSONALLY EXAMINED AND AM FAMILIAR WITH THE INFORMATION SUBMITTED HEREIN; AND BASED ON MY INQUIRY OF THOSE INDIVIDUALS IMMEDIATELY RESPONSIBLE FOR OBTAINING THE INFORMATION, I BELIEVE THE SUBMITTED INFORMATION IS TRUE, ACCURATE AND COMPLETE. I AM AWARE THAT THERE ARE SIGNIFICANT PENALTIES FOR SUBMITTING FALSE INFORMATION, INCLUDING THE POSSIBILITY OF FINE AND IMPRISONMENT. SEE 18 U.S.C. § 1001 AND 33 U.S.C. § 1319. *(Penalties under these statutes may include fines up to $10,000 and/or maximum imprisonment of between 6 months and 5 years.)*

SIGNATURE OF PRINCIPAL EXECUTIVE OFFICER OR AUTHORIZED AGENT

TELEPHONE: AREA CODE 405 NUMBER 270-2395

DATE: YEAR 84 MO 09 DAY 01

COMMENT AND EXPLANATION OF ANY VIOLATIONS (*Reference all attachments here*)

PERMITTEE NAME/ADDRESS (*Include Facility Name/Location if different*)

NAME KERR-MCGEE

ADDRESS P.O. BOX906

COLUMBUS MS 39701

1680

FACILITY

LOCATION

NATIONAL POLLUTANT DISCHARGE ELIMINATION SYSTEM (*NPDES*)

DISCHARGE MONITORING REPORT (*DMR*)

Form Approved
OMB No. 2000-0015

(2-16) PERMIT NUMBER	(17-19) DISCHARGE NUMBER
90021	001

MONITORING PERIOD

	YEAR (20-21)	MO (22-23)	DAY (24-25)		YEAR (26-27)	MO (28-29)	DAY (30-31)
FROM	84	07	01	TO	84	08	01

RECEIVED
1984 OCT 26 AM 9:06

NOTE: Read instructions before completing this form.

PARAMETER (32-37)		(3 Card Only) QUANTITY OR LOADING (46-53) AVERAGE	(54-61) MAXIMUM	UNITS	(4 Card Only) QUALITY OR CONCENTRATION (38-45) MINIMUM	(46-53) AVERAGE	(54-61) MAXIMUM	UNITS	NO. EX (62-63)	FREQUENCY OF ANALYSIS (64-68)	SAMPLE TYPE (69-70)
PH, EFFLUENT	SAMPLE MEASUREMENT	******	******	******	6.48	******	******	**********		3/7	grab
000400	PERMIT REQUIREMENT	******	******	******	******	******	******	**********		3/7	GRAB
-GREASE	SAMPLE MEASUREMENT	.34	1.0		2.3	14.2	41.0			3/7	grab
000550	PERMIT REQUIREMENT	1.7	3.3	LBS/DA	******	50	100	MG/L	***	3/7	GRAB
ARSENIC, TOTAL	SAMPLE MEASUREMENT	N/A	N/A		N/A	N/A	N/A			1/365	24 hour
001002	PERMIT REQUIREMENT	******	.13	LBS/DA	******	******	4	MG/L	***	1/365	24HR
CHROMIUM, TOTAL	SAMPLE MEASUREMENT	N/A	N/A		N/A	N/A	N/A			1/365	24 hour
001034	PERMIT REQUIREMENT	******	.13	LBS/DA	******	******	4	MG/L	***	1/365	24HR
COPPER, TOTAL	SAMPLE MEASUREMENT	N/A	N/A		N/A	N/A	N/A			1/365	24 hour
001042	PERMIT REQUIREMENT	******	.17	LBS/DA	******	******	5	MG/L	***	1/365	24HR
FLOW RATE	SAMPLE MEASUREMENT	.0029	.0086		******	******	******	******		1/1	00 insta
074060	PERMIT REQUIREMENT	******	******	MG/DAY	******	******	******	**********		1/1	INSTA
**********	SAMPLE MEASUREMENT	******	******	******	******	******	******	******		**********	
**********	SAMPLE MEASUREMENT	******	******	******	******	******	******	******		**********	
**********	PERMIT REQUIREMENT	******	******	******	******	******	******	**********		**********	

NAME/TITLE PRINCIPAL EXECUTIVE OFFICER		TELEPHONE		DATE		
W.J. Broussard Director-Plant Operations	I CERTIFY UNDER PENALTY OF LAW THAT I HAVE PERSONALLY EXAMINED AND AM FAMILIAR WITH THE INFORMATION SUBMITTED HEREIN; AND BASED ON MY INQUIRY OF THOSE INDIVIDUALS IMMEDIATELY RESPONSIBLE FOR OBTAINING THE INFORMATION, I BELIEVE THE SUBMITTED INFORMATION IS TRUE, ACCURATE AND COMPLETE. I AM AWARE THAT THERE ARE SIGNIFICANT PENALTIES FOR SUBMITTING FALSE INFORMATION, INCLUDING THE POSSIBILITY OF FINE AND IMPRISONMENT. SEE 18 U.S.C. § 1001 AND 33 U.S.C § 1319. *(Penalties under these statutes may include fines up to $10,000 and/or maximum imprisonment of between 6 months and 5 years.)*	W.J. Broussard	405	270-2395	84	08	01
TYPED OR PRINTED		SIGNATURE OF PRINCIPAL EXECUTIVE OFFICER OR AUTHORIZED AGENT	AREA CODE	NUMBER	YEAR	MO	DAY

COMMENT AND EXPLANATION OF ANY VIOLATIONS (*Reference all attachments here*)

Form Approved
OMB No. 2000-0015

PERMITTEE NAME/ADDRESS (*Include Facility Name/Location if different*)
NAME KERR-MCGEE
ADDRESS P.O. BOX906
COLUMBUS MS 39701
1680
FACILITY
LOCATION

Lowndes

NATIONAL POLLUTANT DISCHARGE ELIMINATION SYSTEM (*NPDES*)
DISCHARGE MONITORING REPORT (*DMR*)

(2-16) PERMIT NUMBER	(17-19) DISCHARGE NUMBER
90021	001

IND

MONITORING PERIOD

	YEAR	MO	DAY		YEAR	MO	DAY
FROM	84	06	01	TO	84	07	01
	(20-21)	(22-23)	(24-25)		(26-27)	(28-29)	(30-31)

NOTE: Read instructions before completing this form.

PARAMETER (32-37)		(3 Card Only) QUANTITY OR LOADING (46-53) AVERAGE	(54-61) MAXIMUM	UNITS	(4 Card Only) QUALITY OR CONCENTRATION (38-45) MINIMUM	(46-53) AVERAGE	(54-61) MAXIMUM	UNITS	NO. EX (62-63)	FREQUENCY OF ANALYSIS (64-68)	SAMPLE TYPE (69-70)
PH, EFFLUENT	SAMPLE MEASUREMENT	******	******	******		******	******	**********			01
		******	******	******	5.2	******	******	**********		3/7	GRAB
000400	PERMIT REQUIREMENT	******	******	******	******	******	******	**********		3/7	GRAB
-GREASE	SAMPLE MEASUREMENT	.98	1.95		5.98	40.89	200.50*			3/7	GRAB
000550	PERMIT REQUIREMENT	1.7	3.3	LBS/DA	******	50	100	MG/L		3/7	GRAB
ARSENIC, TOTAL	SAMPLE MEASUREMENT	N/A	N/A		N/A	N/A	N/A			1/365	24 Hour Comp.
001002	PERMIT REQUIREMENT	******	.13	LBS/DA	******	******	4	MG/L		1/365	24HR
CHROMIUM, TOTAL	SAMPLE MEASUREMENT	N/A	N/A		N/A	N/A	N/A			1/365	24 Hour Comp.
001034	PERMIT REQUIREMENT	******	.13	LBS/DA	******	******	4	MG/L		1/365	24HR
COPPER, TOTAL	SAMPLE MEASUREMENT	N/A	N/A		N/A	N/A	N/A			1/365	24 Hour Comp.
001042	PERMIT REQUIREMENT	******	.17	LBS/DA	******	******	5	MG/L		1/365	24HR
OW RATE	SAMPLE MEASUREMENT	.0029	.0058		******	******	******	******		1/1	00 Instant
74060	PERMIT REQUIREMENT	******	******	MG/DAY	******	******	******	**********		1/1	INSTA
**********	SAMPLE MEASUREMENT	******	******	******	******	******	******	******		**********	
**********		******	******	******	******	******	******	******		**********	
**********	PERMIT REQUIREMENT	******	******	******	******	******	******	**********		**********	

NAME/TITLE PRINCIPAL EXECUTIVE OFFICER		TELEPHONE	DATE		
W. J. Broussard Director - Plant Operations	I CERTIFY UNDER PENALTY OF LAW THAT I HAVE PERSONALLY EXAMINED AND AM FAMILIAR WITH THE INFORMATION SUBMITTED HEREIN; AND BASED ON MY INQUIRY OF THOSE INDIVIDUALS IMMEDIATELY RESPONSIBLE FOR OBTAINING THE INFORMATION, I BELIEVE THE SUBMITTED INFORMATION IS TRUE, ACCURATE AND COMPLETE. I AM AWARE THAT THERE ARE SIGNIFICANT PENALTIES FOR SUBMITTING FALSE INFORMATION, INCLUDING THE POSSIBILITY OF FINE AND IMPRISONMENT. SEE 18 U.S.C. § 1001 AND 33 U.S.C § 1319. *(Penalties under these statutes may include fines up to $10,000 and/or maximum imprisonment of between 6 months and 5 years.)*	W. J. Broussard SIGNATURE OF PRINCIPAL EXECUTIVE OFFICER OR AUTHORIZED AGENT	AREA CODE 405 NUMBER 270-2395	YEAR 84	MO 07	DAY 01
TYPED OR PRINTED					

COMMENT AND EXPLANATION OF ANY VIOLATIONS (*Reference all attachments here*) * The 200.50 MG/L reported as a maximum for oil and grease occured on June 29, 1984. We feel that this high reading was due to contamination of the sample prior to lab analysis.

PERMITTEE NAME/ADDRESS (*Include Facility Name/Location if different*)

NAME KERR-MCGEE

ADDRESS P.O. BOX906

COLUMBUS MS 39701

1680

FACILITY

LOCATION

NATIONAL POLLUTANT DISCHARGE ELIMINATION SYSTEM (*NPDES*)

DISCHARGE MONITORING REPORT (*DMR*)

BB Form Approved
OMB No. 2000-0015

(2-16) PERMIT NUMBER	(17-19) DISCHARGE NUMBER
90021	001

MONITORING PERIOD	YEAR	MO	DAY		YEAR	MO	DAY
FROM	84	05	01	TO	84	06	01
	(20-21)	(22-23)	(24-25)		(26-27)	(28-29)	(30-31)

RECEIVED IND
1984 AUG -6 AM 9:20

NOTE: Read instructions before completing this form.

PARAMETER (32-37)		(3 Card Only) QUANTITY OR LOADING (46-53) AVERAGE	(54-61) MAXIMUM	UNITS	(4 Card Only) QUALITY OR CONCENTRATION (38-45) MINIMUM	(46-53) AVERAGE	(54-61) MAXIMUM	UNITS	NO. EX (62-63)	FREQUENCY OF ANALYSIS (64-68)	SAMPLE TYPE (69-70)
PH, EFFLUENT	SAMPLE MEASUREMENT	******	******	******		******	******	**********			01
		******	******	******	5.8	******	******	**********		3/7	GRAB
000400	PERMIT REQUIREMENT	******	******	******	******	******	******	**********		3/7	GRAB
L-GREASE	SAMPLE MEASUREMENT	.72	2.17		22.9	30.3	34.4			3/7	GRAB
000550	PERMIT REQUIREMENT	1.7	3.3	LBS/DA	******	50	100	MG/L	***	3/7	GRAB
ARSENIC, TOTAL	SAMPLE MEASUREMENT	N/A	N/A		N/A	N/A	N/A			1/365	24 Hour Comp.
001002	PERMIT REQUIREMENT	******	.13	LBS/DA	******	******	4	MG/L	***	1/365	24HR C
CHROMIUM, TOTAL	SAMPLE MEASUREMENT	N/A	N/A		N/A	N/A	N/A			1/365	24 Hour Comp.
001034	PERMIT REQUIREMENT	******	.13	LBS/DA	******	******	4	MG/L	***	1/365	24HR C
COPPER, TOTAL	SAMPLE MEASUREMENT	N/A	N/A		N/A	N/A	N/A			1/365	24 Hour Comp.
001042	PERMIT REQUIREMENT	******	.17	LBS/DA	******	******	5	MG/L	***	1/365	24HR C
FLOW RATE	SAMPLE MEASUREMENT	.0029	.0086		******	******	******	******		1/1	00 Instant
074060	PERMIT REQUIREMENT	******	******	MG/DAY	******	******	******	******	***	1/1	INSTA
**********	SAMPLE MEASUREMENT	******	******	******	******	******	******	******		******	******
**********		******	******	******	******	******	******	******		******	******
**********	PERMIT REQUIREMENT	******	******	******	******	******	******	******	***	******	******

NAME/TITLE PRINCIPAL EXECUTIVE OFFICER		TELEPHONE		DATE		
W. J. Broussard Director - Plant Operations	I CERTIFY UNDER PENALTY OF LAW THAT I HAVE PERSONALLY EXAMINED AND AM FAMILIAR WITH THE INFORMATION SUBMITTED HEREIN; AND BASED ON MY INQUIRY OF THOSE INDIVIDUALS IMMEDIATELY RESPONSIBLE FOR OBTAINING THE INFORMATION, I BELIEVE THE SUBMITTED INFORMATION IS TRUE, ACCURATE AND COMPLETE. I AM AWARE THAT THERE ARE SIGNIFICANT PENALTIES FOR SUBMITTING FALSE INFORMATION, INCLUDING THE POSSIBILITY OF FINE AND IMPRISONMENT. SEE 1B U.S.C. § 1001 AND 33 U.S.C § 1319. *(Penalties under these statutes may include fines up to $10,000 and/or maximum imprisonment of between 6 months and 5 years.)*	W. J. Broussard	405	270-2395	84	06	01
TYPED OR PRINTED		SIGNATURE OF PRINCIPAL EXECUTIVE OFFICER OR AUTHORIZED AGENT	AREA CODE	NUMBER	YEAR	MO	DAY

COMMENT AND EXPLANATION OF ANY VIOLATIONS (*Reference all attachments here*)

KERR-McGEE CHEMICAL CORPORATION
P.O. BOX 906 • COLUMBUS, MISSISSIPPI 39703-0906

RECEIVED
DEC 14 1990
Dept. of Environmental Quality
Bureau of Pollution Control

December 11, 1990

Mississippi Department of Natural Resources
Bureau of Pollution Control
P.O. Box 10385
Jackson, MS 39209

Attention: Todd Edwards

Dear Mr. Edwards:

Attached please find the Discharge Monitoring Report for the month of November, 1990.

We experienced one exceedence during the month, due to a pump failure.

Please advise if you have any questions, or require further information.

Sincerely,

John J. Betz

Kerr McGee Chemical Corporation
Forest Products Division
Columbus, MS

FOREST PRODUCTS

STATE OF MISSISSIPPI

DEPARTMENT OF ENVIRONMENTAL QUALITY

RAY MABUS
GOVERNOR

MEMORANDUM

TO: File of Kerr McGee - Wood Preserving

FROM: Nameh Salem

SUBJECT: Compliance Evaluation Inspection - CEI

DATE: November 21, 1990

On November 3, 1990, I performed a CEI at Kerr McGee wood preserving facility in Columbus. I met Mr. Getz, the plant manager. Revision of their records reporting revealed that the facility DMRs were recorded incorrectly for the months January, February, March, and April, 1990. The incorrectness of the Avg. Con., Max Conc., and Max Loading of oil and grease and phenols reporting is due to error in calculating Avg. Conc. and Max Loading. Talking to Mr. Evans, the superintendent of the facility, who records the values, admitted that it was his mistake and that happened when he first started working at the facility in December 89. I requested from the manager, Mr. Getz all DMR values from January 1990 till up to date to be recalculated and rereported to us immediately for reevaluation. He said he will forward all results to me immediately. I toured the wastewater treatment area of the facility and did not observe any problems; however, I observed a thin oil sheen in the effluent at the discharge point into the sewer system. I brought this to the attention of Mr. Evans. I also noticed accumulation of black tarry oil layers on the wall of the sump where the effluent is discharged into the sewer system.

NS:mc

FILE COPY

MEMORANDUM

TO: File of Kerr McGee - Wood Preserving

FROM: Nameh Salem

SUBJECT: Compliance Evaluation Inspection - CEI

DATE: November 21, 1990

On November 3, 1990, I performed a CEI at Kerr McGee wood preserving facility in Columbus. I met Mr. Getz, the plant manager. Revision of their records reporting revealed that the facility DMRs were recorded incorrectly for the months January, February, March, and April, 1990. The incorrectness of the Avg. Con., Max Conc., and Max Loading of oil and grease and phenols reporting is due to error in calculating Avg. Conc. and Max Loading. Talking to Mr. Evans, the superintendent of the facility, who records the values, admitted that it was his mistake and that happened when he first started working at the facility in December 89. I requested from the manager, Mr. Getz all DMR values from January 1990 till up to date to be recalculated and rereported to us immediately for reevaluation. He said he will forward all results to me immediately. I toured the wastewater treatment area of the facility and did not observe any problems; however, I observed a thin oil sheen in the effluent at the discharge point into the sewer system. I brought this to the attention of Mr. Evans. I also noticed accumulation of black tarry oil layers on the wall of the sump where the effluent is discharged into the sewer system.

NS:mc

FILE CO

November 21, 1990

Mr. J. J. Getz, Plant Manager
Kerr McGee Chemical Corporation
P. O. Box 906
Columbus, Mississippi 39701

Dear Mr. Getz:

Re: Permit No. MSP090021
Compliance Evaluation Inspection
Kerr McGee facility

Enclosed is a copy of the compliance Evaluation inspection report completed as a result of this office's inspection at Kerr McGee facility in Columbus, Mississippi on November 8, 1990. The report should be used by you as a guide for complying with requirements and limitations stated in your pretreatment permit. The inspection indicated that the facility was not in compliance.

Please refer to summary of findings and comments in the attached inspection report.

If you have any questions concerning this matter, please contact us at 961-5171.

Respectfully,

Nameh Salem
Industrial Pretreatment Section

NS:mc
Enclosures
cc: Mr. Paul Zetterholm (w/attachment)

KERR-McGEE CHEMICAL CORPORATION
P.O. BOX 906 • COLUMBUS, MISSISSIPPI 39703-0906

November 16, 1990



Mississippi Department of Environmental Quality
Bureau of Pollution Control
P.O. Box 10385
Jackson, MS 39289-0385

Attn: Mr. Nameh Y. Salem
Environmental Engineer

Dear Mr. Salem:

Enclosed please find corrected copies of the Discharge Monitoring Reports for the months of January through June of 1990, along with first time submittals for July through October 1990. Please note that our supporting form is in a different format than the copies we provided for you during your visit on 11/8/90. We felt that our computations would be more accurate if they were done through our computer.

During your visit, we discovered that we were not calculating the phenol discharge correctly. Based on our new discharge figures, we have found that we have been out of compliance for 7 out of 10 months in 1990.

Based on these findings, we have begun a program to accomplish the following:

A. Minimize source phenolics.
B. Evaluate technology to reduce phenolic discharge.

After an intensive and thorough investigation, we expect to be able to present a plan for corrective action to you by January 1, 1990.

Please advise if you have any questions, or require further information.

Sincerely,

John J. Getz
Plant Manager
KMCC-FPD

cc: J.H. Bull w/ attachment
R.P. Michel w/o attachment

FOREST PRODUCTS

KERR-McGEE CHEMICAL CORPORATION
P.O. BOX 906 • COLUMBUS, MISSISSIPPI 39703-0906

July 19, 1990

RECEIVED
JUL 20 1990
Dept. of Environmental Quality
Bureau of Pollution Control

Mississippi Department of Natural Resources
Bureau of Pollution Control
P.O. Box 10385
Jackson, MS 39209

Attention: Todd edwards

Dear Mr. Edwards,

Attached, please find the discharge monitoring report for the month of March, April, May, and June, 1990.

We experienced two exceedences during the month of March, both of which were due to equipment failures. There were no exceedences for April, May, or June.

Please advise if you have any questions, or require further information.

Sincerly,

John J. Getz

John J. Getz, Manager
Kerr McGee Chemical Corp.
Forest Products Div.
Columbus, MS

JJG:jg

TODD S. EDWARDS
Environmental Engineer

Bureau of Pollution Control
P.O. Box 10385
Jackson, Mississippi 39209

(601) 961-5171

IS HEREBY REQUESTED TO
FURNISH THIS INFORMATION
IN REPLY TO
YOUR RECENT REQUEST

10 JANUARY 1990

MR. JOHN GEEZ, PLANT MANAGER
KERR-McGEE
607 14TH ST. NORTH
BOX 906
COLUMBUS, MISSISSIPPI 38701

DEAR MR. GEEZ,

RE: PRETREATMENT PERMIT NO. PT90021
DMR's

ENCLOSED PLEASE FIND KERR-McGEE'S DMR'S FOR NOVEMBER AND DECEMBER 1989. NOTE THAT THEY ARE UNSIGNED. PLEASE SIGN AND RESUBMIT THESE REPORTS TO THIS OFFICE BY 22 JANUARY 1990.

ALSO, PER OUR TELECON, PLEASE SUBMIT KERR-McGEE OCTOBER 1989 REPORT ALONG WITH THE ABOVE TRANSMITTAL.

IF YOU HAVE ANY QUESTIONS, PLEASE ADVISE.

SINCERELY,

TSE

TODD S. EDWARDS

KERR-McGEE CHEMICAL CORPORATION
P.O. BOX 906 • COLUMBUS, MISSISSIPPI 39701

January 19, 1990

RECEIVED
JAN 23 REC'D
Dept. of Environmental Quality
Bureau of Pollution Control

Mr. Todd S. Edwards
Mississippi Dept. of Natural Resources
Industrial Wastewater Control Branch
P.O. Box 10385
Jackson, MS 39289-0385

Mr. Edwards,

Attached please find the fully executed copies of the Facility Discharge Monitoring Report for the months of November and December, which were sent to you originally without being signed and dated, and also the Facility Discharge Monitoring Report for the month of October, which the prior management had failed to send.

PLease be assured that we will make every effort to improve the timeliness of our submittals, the accuracy of our submittals, and ensure that with are within our permit limits.

PLease feel free to contact me if you have any questions, or require further information.

Sincerly,

John J. Getz

John J. Getz-Plant Mgr.

JJG:jg

FOREST PRODUCTS

MISSISSIPPI DEPARTMENT OF NATURAL RESOURCES
Bureau of Pollution Control
P. O. Box 10385
Jackson, Mississippi 39209
(601) 961-5171

MEMORANDUM

TO: IT FILE - KERR McGEE
FROM: TODD S. EDWARDS
SUBJECT: COMPLIANCE EVALUATION INSPECTION
DATE: 3 APRIL 1990

ON 30 MARCH 1990 I PERFORMED A CEI AT KERR-McGEE IN COLUMBUS, MISSISSIPPI. PLEASE SEE FORM 3560 FOR DETAILS CONCERNING THIS INSPECTION.

KERR-McGEE CHEMICAL CORPORATION
P.O. BOX 906 • COLUMBUS, MISSISSIPPI 39703-0906

April 5, 1990

RECEIVED
APR - 6 REC'D
Dept. of Environmental Quality
Bureau of Pollution Control

Mississippi Department of Natural Resources
Bureau of Pollution Control
P.O. Box 10385
Jackson, MS 39209

Attention: Todd Edwards

Attached please find the discharge monitoring report for the month of February, 1990.

We experienced one oil and grease exccedance on February 16th, due to a pump failure. The average for the balance of the month was 4.67, well below permit limits.

Please advise if you have any questions, or require further information.

Sincerely,

John J. Getz, Manager
Kerr McGee Chemical Corporation
Forest Products Division
Columbus, MS

JJG:jg

FOREST PRODUCTS

STATE OF MISSISSIPPI

DEPARTMENT OF ENVIRONMENTAL QUALITY

RAY MABUS
GOVERNOR

FILE COPY

April 19, 1990

Mr. G. R. Harrod, Plant Superintendent
Kerr McGee Chemical Corporation
Box 906
Columbus, Mississippi 39701

Dear Mr. Harrod:

Re: Pretreatment Permit No. PT90021
Recent Facility Inspection

Enclosed is a copy of the compliance evaluation inspection report completed as a result of this office's inspection at Kerr McGee on March 30, 1990. The report should be used by you as a guide for complying with requirements and limitations stated in your pretreatment permit. The inspection revealed that the facility was in compliance.

If you have any questions concerning this matter, please contact us at 961-5171.

Respectfully,

Todd S. Edwards
Industrial Wastewater Control Branch

TSE:cm
Enclosures
cc: Mr. Warren Foster (w/attachment)

FILE COPY

May 22, 1990

Mr. G. R. Harrod, Plant Superintendent
Kerr McGee Forest Products
Post Office Box 906
607 14th Street
Columbus, Mississippi 39701

Dear Mr. Harrod:

Re: PT90021
Compliance Sampling

Enclosed is a copy of the analytical laboratory results on samples taken at Kerr McGee Forest Products on March 22, 1990. These results indicate that the referenced permittee is in compliance with the effluent limitations of their pretreatment permit. We appreciate your efforts in maintaining water quality and encourage the continued success at your facility.

If you have any questions or if we can be of assistance, please advise.

Respectfully,

Nameh Salem
Industrial Pretreatment Section

NS:cdh
Enclosure
cc: NRO (w/enclosure)
Mr. Warren Foster, BPC (w/enclosure)

Lowndes

FILE COPY

December 4, 1989

Mr. G.R. Harrod
Kerr McGee Chemical Corporation
Box 106
Columbus, Mississippi 39701

Dear Mr. Harrod:

Re: Pretreatment Permit No. PT90021
Notification of Significant
Noncompliance

Review of your facility's DMR's for the period April-September 1989 indicate that Kerr McGee is in significant noncompliance with PT90021. The following violations were noted:

Month	Parameter	Permit Limitation	Reported Value	Deviation
May	Oil & Grease	50 mg/l	88.8 mg/l	78%
June	DO.	DO.	71.8 mg/l	44%

Although Kerr McGee demonstrated compliance in August and September of 1989, continued consistent permit violations may precipitate enforcement action by this office.

If you have any questions, please advise.

Sincerely,

Todd S. Edwards
Industrial Wastewater Control Branch

TE:lc

T&E

KERR-McGEE CHEMICAL CORPORATION
P.O. BOX 906 • COLUMBUS, MISSISSIPPI 39701

September 25, 1989

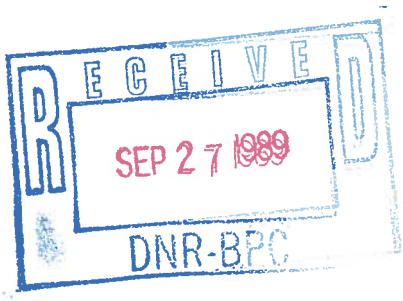

Mississippi Department of Natural Resources
Breau of Pollution Control

ATTN: Todd Edwards
P.O. Box 10385
Jackson, Ms. 39209

Subject: Discharge Monitoring Report
Month of August, 1989
Kerr McGee Chemical Corporation
Columbus, Ms. 39705

Dear Mr. Edwards:

Please find subject report attached. No exceedances were experienced during the month.

This report is required by and prepared specifically for the Mississippi Bureau of Pollution Control. It re-presnets the observed results of measurements and analyses required by the MPPC. It is not intended as an assertion of the accuracy of any instrument, reading or analytical result, nor is it an endorsement of the suitability or measurement procedure.

G. R. Harrod

GRH/pjr

cc: P. C. Gaskin

KERR-McGEE FOREST PRODUCTS

EPS Analytical Services

October 18, 1989

RECEIVED
NOV - 3 1989
Dept. of Environmental Quality
Bureau of Pollution Control

Mr. Jonathan Carraway
Kerr McGee Chemical Corporation
P. O. Box 906
Columbus, Mississippi 39703

Dear Mr. Carraway:

During the month of September, EPS moved its analytical laboratory to a new Jackson location. Laboratory operations were necessarily curtailed for a time. As a result, completion of analysis of your company's September water samples has been delayed.

We regret any inconvenience these circumstances might have caused. Please be assured that we are making every effort to expedite testing of these samples.

I would anticipate that these analyses will be completed within a week. In the meantime, if you should need any additional information, please do not hesitate to call or write.

Sincerely,

Ray Hudnall

L. Raymond Hudnall
Client Services Coordinator

LRH/lr

cc: Ross Harrod

RECEIVED
OCT 20 1989
KERR-McGEE CORP.
[illegible] PRODUCTS DIV.

5360 I-55 North, Jackson, Mississippi 39211
(601) 956-1400 FAX (601) 956-2365

MISSISSIPPI DEPARTMENT OF NATURAL RESOURCES
Bureau of Pollution Control
P. O. Box 10385
Jackson, Mississippi 39209
(601) 961-5171

DW

TO: Todd Edwards
FROM: David Hall, NRO
DATE: August 16th, 1989

SUBJECT: Kerr McGee
Lowndes County

On August 15th, 1989, Dewitt Spurgeon and I performed a scheduled Compliance Monitoring Sample at the above facility.

Except for a considerable delay to get in the plant, we saw no problems.

If I can be of any further assistance, please let me know.

DH:c

KERR-McGEE CHEMICAL CORPORATION
P.O. BOX 906 • COLUMBUS, MISSISSIPPI 39701

RECEIVED
AUG 11 1989
Dept. of Natural Resources
Bureau of Pollution Control

August 9, 1989

Mississippi Department of Natural Resources
Bureau of Pollution Control
Attention: Todd Edwards
P. O. box 10385
Jackson, MS 39209

Subject: Discharge Monitoring Report
Month of July 1989
Kerr-McGee Chemical Corporation
Columbus, MS
Permit No. PT90021

Dear Mr. Edwards:

Please find subject report attached.

Four oil and grease exceedances were experienced during the month. A copy of my letter of August 8, 1989, reporting these exceedances is attached.

If you have any questions or comments, please call.

Sincerely,

G. R. Harrod

GRH/bjb

cc: P. C. Gaskin

KERR-McGEE CHEMICAL CORPORATION
P.O. BOX 906 • COLUMBUS, MISSISSIPPI 39701

RECEIVED
AUG 09 1989
Dept. of Natural Resources
Bureau of Pollution Control

August 8, 1989

Mississippi Department of Natural Resources
Bureau of Pollution Control
Attention: Lou Lavalle
P. O. Box 10385
Jackson, MS 39209

Subject: Exceedance Notifications July 7, 13, 17, 18, 1989
KMCC-FPD Columbus, MS Pre-Treatment
Permit No. PT90021

Dear Mr. Lavalle:

The oil and grease results were 140, 103, 106, and 113, respectfully. Subsequent results have been 52 on 7/19, 30 on 7/20, 9.7 on 7/25, 2.4 on 7/26, and 12 on 7/27. These results indicate improvement. We are constantly monitoring our system to achieve consistent results which meet the requirements.

If you have any questions or comments, please call.

Sincerely,

G. R. Harrod

GR/bjb

KERR-McGEE CHEMICAL CORPORATION
P.O. BOX 906 • COLUMBUS, MISSISSIPPI 39701

RECEIVED
JUL 24 1989
Dept. of Natural Resources
Bureau of Pollution Control

July 19, 1989

Mississippi Department of Natural Resources
Bureau of Pollution Control
Attention: Lou Lavalle
P. O. Box 10385
Jackson, MS 39209

Subject: Exceedance Notification July 7, 1989.
KMCC-FPD Columbus, MS Pre-Treatment
Permit No. PT90021

Dear Mr. Lavalle:

The oil and grease level on July 7, 1989, was 140. The level on July 6 was 67, and it was 63 on July 8. We are not able to explain the sudden increase in the level on July 7. We will continue to monitor our system.

If you have any questions or comments, please call.

Sincerely,

G. R. Harrod

GRH/bjb

KERR-McGEE CHEMICAL CORPORATION
P.O. BOX 906 • COLUMBUS, MISSISSIPPI 39701

RECEIVED
JUL 20 1989
Dept. of Natural Resources
Bureau of Pollution Control

July 19, 1989

Mississippi Department of Natural Resources
Bureau of Pollution Control
Attention: Todd Edwards
P. O. Box 10385
Jackson, MS 39209

SUBJECT: Discharge Monitoring Report
Month of June 1989
Kerr McGee Chemical Corporation
Columbus, MS
Permit No. PT90021

Dear Mr. Edwards:

Please find subject report attached.

Four oil and grease exceedances were experienced during the month. A copy of our notification letters of June 27, 1989, and July 19, 1989, are attached for your ready reference.

The DMR report shows five oil and grease exceedances for the month. The fifth exceedance is reported due to the daily average being 88%, which exceeds the permit level of 50 for a daily average.

Sincerely,

G. R. Harrod

GRH/bjb

KERR-McGEE CHEMICAL CORPORATION
P.O. BOX 906 • COLUMBUS, MISSISSIPPI 39701

RECEIVED
JUL 20 1989
Dept. of Natural Resources
Bureau of Pollution Control

July 19, 1989

Mississippi Department of Natural Resources
Bureau of Pollution Control
Attention: Lou Lavalle
P. O. Box 10385
Jackson, MS 39209

SUBJECT: Exceedance Notification June 21 and June 22, 1989
KMCC-FPD Columbus, MS Pre-Treatment
Permit No. PT90021

Dear Mr. Lavalle:

Oil and grease levels exceeded the permit levels on June 21 and June 22, 1989. The levels were 113 and 101. Subsequent levels have been 85 on June 27, 84 on June 28, and 79 on June 29. We are not able to give a reasonable explanation for the exceedances.

We are closely monitoring our system to prevent any more exceedances.

If you have any questions or comments, please call.

Sincerely,

G. R. Harrod

GR/bjb

KERR-McGEE CHEMICAL CORPORATION
P.O. BOX 906 • COLUMBUS, MISSISSIPPI 39701

RECEIVED
JUN 30 1989
Dept. of Natural Resources
Bureau of Pollution Control

June 27, 1989

Mississippi Department of Natural Resources
Bureau of Pollution Control
Attention: Todd Edwards
P. O. Box 10385
Jackson, MS 39209

SUBJECT: Discharge Monitoring Report
Month of May 1989
Kerr McGee Chemical Corporation
Columbus, MS
Permit No. PT90021

Dear Mr. Edwards:

Please find subject report attached.

Four oil and grease and three phenol exceedances were experienced during the month. A copy of our notification letters of June 7, 1989, and June 23, 1989, are attached for your ready reference.

The DMR report shows five oil and grease exceedances for the month. The fifth exceedance is reported due to the daily average being 71.8, which exceeds the permit level of 50 for a daily average.

Sincerely,

G. R. Harrod

GRH/bjb

KERR-McGEE CHEMICAL CORPORATION
P.O. BOX 906 • COLUMBUS, MISSISSIPPI 39701

RECEIVED
JUN 30 1989
Dept. of Natural Resources
Bureau of Pollution Control

June 27, 1989

Mississippi Department of Natural Resources
Bureau of Pollution Control
Attention: Lou Lavalle
P. O. Box 10385
Jackson, MS 39209

SUBJECT: Exceedance Notification June 6 and June 8, 1989
KMCC-FPD Columbus, MS Pre-Treatment
Permit No. PT90021

Dear Mr. Lavalle:

Oil and grease levels exceeded the permit levels on June 6 and June 8, 1989. The levels were 192 and 135. Subsequent levels have been 77 on June 3, 50 on June 14, and 45 on June 15. We are not able to give a reasonable explanation for the exceedance.

We are closely monitoring our system to prevent any more exceedances.

Sincerely,

G. R. Harrod

GR/bjb

KERR-McGEE CHEMICAL CORPORATION
P.O. BOX 906 • COLUMBUS, MISSISSIPPI 39701

RECEIVED
JUN 30 1989
Dept. of Natural Resources
Bureau of Pollution Control

June 27, 1989

Mississippi Department of Natural Resources
Bureau of Pollution Control
Attention: Todd Edwards
P. O. Box 10385
Jackson, MS 39209

SUBJECT: Discharge Monitoring Report
Month of April 1989
Kerr McGee Chemical Corporation
Columbus, MS
Permit No. PT90021

Dear Mr. Edwards:

Please find subject report attached.

Two phenol exceedances were experienced during the month. A copy of our notification letter of May 22, 1989, is attached for your reference.

If you have any questions or comments, please call.

Sincerely,

G. R. Harrod

GRH/bjb

KERR-McGEE CHEMICAL CORPORATION
P.O. BOX 906 • COLUMBUS, MISSISSIPPI 39701

RECEIVED
JUN 30 1989
Dept. of Natural Resources
Bureau of Pollution Control

June 23, 1989

Mississippi Department of Natural Resources
Bureau of Polution Control
Attention: Lou Lavalle
P. O. Box 10385
Jackson, MS 39209

SUBJECT: Exceedance Notification May 24, 1989
KMCC-FPD Columbus, MS Pre-Treatment
Permit No. PT90021

Dear Mr. Lavalle:

The phenol level for May 24, 1989 was in excess of our permit levels. The level was 56.5 pounds. The permit allows a maximum of 48.8 pounds. We are not able to give a reasonable explanation for the exceedance. The phenol level on May 26, 1989, was 15.7 pounds.

If you have any questions or comments, please call.

Sincerely,

G. R. Harrod

GRH/bjb

KERR-McGEE CHEMICAL CORPORATION
P.O. BOX 906 • COLUMBUS, MISSISSIPPI 39701

RECEIVED
JUN - 9 1989
Dept. of Natural Resources
Bureau of Pollution Control

June 7, 1989

Mississippi Department of Natural Resources
Bureau of Polution Control
Attention: Lou Lavalle
P.O. Box 10385
Jackson, MS 39209

Subject: Exceedance Notification
KMCC-FPD Columbus, MS Pre-Treatment
Permit No. PT90021

Dear Mr. Lavalle:

This is to report exceedances as shown below:

May 2, 1989	Oil and Grease	154 Mg/L, permit 100 Mg/L
May 3, 1989	Oil and Grease	123 Mg/L
May 4, 1989	Oil and Grease	178 Mg/L
May 9, 1989	Oil and Grease	115 Mg/L
May 11, 1989	Phenols	94.4 lbs, permit 48.8 lbs
May 23, 1989	Phenols	57.0 pounds

Except for the dates shown above, all discharge parameters have been within the permit requirements. We are not able to give a reasonable explanation for these exceedances. Our daily inspections and monitoring of our system indicates that it is functioning in a normal manner. We will advise you promptly of any future exceedances.

If you have any questions or comments, please call.

G.R. Harrod

GRH/vrc

FILE COPY

June 16, 1989

CERTIFIED MAIL NO. P 176 617 757

Mr. G. R. Harrod
Kerr-McGee Chemical Corporation
Box 906
Columbus, Mississippi 39701

Dear Mr. Harrod:

Re: Pretreatment Permit No. PT90021

Enclosed is Pretreatment Permit Number PT90021; which is hereby reissued to Kerr-McGee Chemical Corporation. Please note the effluent limitations, schedule of compliance, monitoring requirements, and monitoring reporting dates found in this permit.

This permit is issued in accordance with the provisions of the Mississippi Air and Water Pollution Control Law (Sections 49-17-1, et. seq., Mississippi Code of 1972), and the regulations and standards adopted and promulgated thereunder.

Please be advised that this permit does not relieve the permittee from complying with any requirements which the Publicly Owned Treatment Works (POTW) Authority may deem necessary as a prerequisite to the use of the Authority's sewage system and associated treatment works.

If Kerr McGee Chemical Corporation desires that a Permit Board hearing be held regarding this permit, it should make written application to the Board within thirty (30) days after the date of the Permit Board action in accordance with Section 49-17-29(4)(b) of the Mississippi Code; otherwise, the terms, conditions and limitations in the permit shall become final.

Please note that Part II; B.15 of PT90021 requires that the permittee submit Discharge Monitoring Reports (DMR's) monthly.

If you have any questions, please contact us.

Sincerely,

TSE

Todd S. Edwards
Industrial Wastewater Control Branch

TSE:els
Enclosure
cc: Mr. Warren Foster (w/attachment)
Mr. Glenn Odom (w/attachment)
NRO (w/attachment)
Honorable James M. Trotter, Mayor, City of Columbus (w/attachment)

FILE COPY

May 24, 1989

Lowndes Co.

Mr. G. R. Harrod
Kerr-McGee Chemical Corporation
Box 906
Columbus, Mississippi 39701

Dear Mr. Harrod:

Re: PT90021
Compliance Sampling

Enclosed is a copy of the analytical laboratory results on samples taken at Kerr-McGee on March 14, 1989. These results indicate that the referenced permittee is in compliance with the effluent limitations of their pretreatment permit. We appreciate your efforts in maintaining water quality and encourage the continued success at your facility.

If you have any questions or if we can be of assistance, please advise.

Respectfully,

TSE

Todd S. Edwards
Industrial Wastewater Control Branch

TSE:eb
Enclosure
cc: Mr. Warren Foster, BPC (w/enclosure)

KERR-McGEE CHEMICAL CORPORATION
KERR-McGEE CENTER • OKLAHOMA CITY, OKLAHOMA 73125

April 28, 1989

RECEIVED
MAY - 5 1989
Dept. of Natural Resources
Bureau of Pollution Control

Mr. Todd S. Edwards
Industrial Wastewater Control Section
Bureau of Pollution Control
P.O. Box 10385
Jackson, MS 39209

Dear Mr. Edwards:

Re: Kerr-McGee Chemical Corporation
Forest Products Division
Columbus Facility
Pretreatment Permit PT90021

This acknowledges receipt of the Public Notice and draft permit No. PT9002 for discharge of treated production process wastewater into the Columbus POTW by the Kerr-McGee Chemical Corporation Forest Products Division (KMCC-FPD) Columbus Facility.

It is understood that the KMCC-FPD, Columbus Facility shall limit and monitor the treated production process wastewater discharge as follows:

	Discharge Limitations			Monitoring Requirements	
	lbs.day Daily Max.	mg/l Daily Avg.	mg/l Daily Max.	Monitor Frequency	Sample Type
Flow (MGD)				1/Day	Cont.
Oil & Grease		50	100	2/Week	Grab
Total Phenols	48.8			1/Week	Grab

KMCC-FPD shall endeavor to adhere to the general pretreatment prohibitions, monitoring, reporting and recordkeeping requirements at all times. All instances of non-compliance shall be reported to the BPC and Columbus POTW orally and by written report within 24 hours of becoming aware of the excursion.

Should the BPC have any further questions or comments as a result of the Public Notice, please do not hesitate calling Ross Harrod, Plant Superintendent, (601) 328-7551, or me at (405) 270-2395.

Sincerely,

P. C. Gaskin
Staff, Environmental Control
and Regulatory Affairs

PCG:wpc

cc: G. R. Harrod

FOREST PRODUCTS

2520C

KERR-McGEE CHEMICAL CORPORATION
P.O. BOX 906 • COLUMBUS, MISSISSIPPI 39701

RECEIVED
APR 25 1989
Dept. of Natural Resources
Bureau of Pollution Control

April 21, 1989

Mississippi Department of Natural Resources
Bureau of Pollution Control
Attention: Lou Lavalle
P.O. Box 10385
Jackson, Mississippi 39209

SUBJECT: Discharge Monitoring Report
First Quarter 1989
Kerr-McGee Chemical Corporation - Forest Products Division
Columbus, MS
Pretreatment Permit No. PT90021

Dear Mr Lavalle:

Subject report is enclosed.

For your ready reference, a copy of my letter of February 20, 1989 explaining the phenol exceedencies in late January and early February is attached. A letter is also attached explaining the oil and grease exceedencies in March 1989.

If you have any questions or comments, please call.

Sincerely,

G.R. Harrod
Superintendent/Plant
Kerr-McGee Chemical Corporation - Forest Products Division
Columbus, MS

GRH/cll

FOREST PRODUCTS

KERR-McGEE CHEMICAL CORPORATION
P.O. BOX 906 • COLUMBUS, MISSISSIPPI 39701

April 20, 1989

Mississippi Department of Natural Resources
Bureau of Pollution Control
Attention: Lou Lavalle
P.O. Box 10385
Jackson, Mississippi 39209

SUBJECT: Exceedance Notification March 28, 30, 31, 1989
KMCC-FPD Columbus, MS Pretreatment Permit No. PT90021

Dear Mr Lavalle:

The oil and grease levels for March 28, 30, and 31, 1989 are in excess of our permit levels. The level on the 28th was 134, 30th 149, and 31st 135. We have not been able to determine why this exceedence occured. An inspection of the system revealed that all components are functioning normally. Subsequent sample results were 43 on April 5, 42 on April 6, and 42 on April 7, 1989.

We are closely monitoring our systems to insure that all parameters stay in compliance. We will advise you promptly of any future exceedencies.

If you have any questions or comments, please call.

Sincerely,

G.R. Harrod
Superintendent/Plant
Kerr-McGee Chemical Corporation - Forest Products Division
Columbus, Ms

GRH/cll

FOREST PRODUCTS

RECORD OF TELEPHONE CONVERSATION

Name of firm or party: KERR - McGEE

Address: COLUMBUS, MISSISSIPPI

Contact: ROSS HARROD

Phone:

MR. HARROD CONTACTED ME ON THIS DATE TO INFORM THIS OFFICE OF THE FOLLOWING OIL & GREASE EXCURSIONS:

MARCH 28TH; 134 mg/L

MARCH 30TH; 149 mg/L

MARCH 31ST; 135 mg/L

MR. HARROD SAID THAT HE WAS UNSURE WHY THE [redacted] EXCURSIONS OCCURED. HE SAID THAT HE SHOULD HAVE THE RESULTS OF MORE RECENT SAMPLING IN HIS OFFICE TOMORROW AND THAT HE WOULD FORWARD SAID RESULTS ALONG WITH A LETTER TO THIS OFFICE AT THAT TIME.

Todd S. Edwards

Signature TODD S. EDWARDS

17 APRIL 1989

Date

FILE COPY

March 22, 1989

Postmaster
Columbus,
Mississippi 39701

Dear Sir:

Re: Kerr-McGee
Columbus, Mississippi
Lowndes County

Please post the attached public notice in your post office on or before April 1, 1989.

If you are unable to do so or if you have any questions, please advise.

Very truly yours,

Harriette Payne, Secretary
Industrial Wastewater Control Branch

HP:els
Attachment

MISSISSIPPI DEPARTMENT OF NATURAL RESOURCES
Bureau of Pollution Control
P. O. Box 10385
Jackson, Mississippi 39209
(601) 961-5171

March 22, 1989

FILE COPY

Mr. Ross Harrod
Plant Superintendent
Kerr-McGee Chemical Corp.
Columbus, Mississippi 39701

Dear Mr. Harrod:

Re: Pretreatment Permit No. PT90021
Draft Permit & Public Notice

Shortly the Mississippi Natural Resources Permit Board intends to reissue the referenced State of Mississippi Pretreatment Permit. The enclosed draft permit contains conditions which we intend to incorporate as part of your final permit. Also enclosed is a Public Notice dated April 1, 1989, which is the beginning of a 30-day comment period during which the general public's input and comments are invited. If you have not already done so, you are also invited to submit written comments by no later than April 30, 1989. A decision regarding the proposed reissuance will be made by the Permit Board after all public comments have been duly considered.

Should you have any questions or wish to discuss this matter, please contact me at 601/961-5171.

Sincerely,

Todd S. Edwards
Industrial Wastewater Control Section

TSE:daa
Enclosures

KERR-McGEE CHEMICAL CORPORATION
P.O. BOX 906 • COLUMBUS, MISSISSIPPI 39701

February 20, 1989

Mississippi Department of Natural Resources
Bureau of Pollution Control
Attn: Lou Lavalle
P. O. Box 10385
Jackson, Mississippi 39209

Dear Sir;

The phenol levels for January 26 and 27, 1989, are in excess of our permit levels. The level on January 26 was 146.54 pounds, and on January 27, 60.69 pounds. These problems are the result of major modifications that were underway on our waste water treatment system during the months of December and January.

A visual check of the waste water showed it to have reasonable turbidity, therefore there was no reason to suspect that anything was wrong. You would have been notified sooner, but I did not receive the lab reports until Friday, February 17. The lab reports usually arrive more promptly, but Environmental Protection Services, the lab we use, lost power during the recent ice storm and was unable to analyze the samples in the usual time frame. Every effort is being made to prevent recurrence of these problems. We will continue to analyze phenols 3 times weekly until we are sure that the problem is solved.

Sincerely,

G. R. Harrod

cc: J. Carraway
P. C. Gaskin

Todd E.

KERR-McGEE CHEMICAL CORPORATION
P.O. BOX 906 • COLUMBUS, MISSISSIPPI 39701

RECEIVED
FEB 23 1989
Dept. of Natural Resources
Bureau of Pollution Control

February 20, 1989

Mississippi Department of Natural Resources
Bureau of Pollution Control
Attn: Lou Lavalle
P. O. Box 10385
Jackson, Mississippi 39209

Dear Sir;

The phenol levels for January 26 and 27, 1989, are in excess of our permit levels. The level on January 26 was 146.54 pounds, and on January 27, 60.69 pounds. These problems are the result of major modifications that were underway on our waste water treatment system during the months of December and January.

A visual check of the waste water showed it to have reasonable turbidity, therefore there was no reason to suspect that anything was wrong. You would have been notified sooner, but I did not receive the lab reports until Friday, February 17. The lab reports usually arrive more promptly, but Environmental Protection Services, the lab we use, lost power during the recent ice storm and was unable to analyze the samples in the usual time frame. Every effort is being made to prevent recurrence of these problems. We will continue to analyze phenols 3 times weekly until we are sure that the problem is solved.

Sincerely,

G. R. Harrod

cc: J. Carraway
P. C. Gaskin

Ross Harrod

KERR-McGEE FOREST PRODUCTS

MISSISSIPPI DEPARTMENT OF NATURAL RESOURCES
Bureau of Pollution Control
P. O. Box 10385
Jackson, Mississippi 39209
(601) 961-5171

February 1, 1989

Mr. Pete Creekmore
Kerr-McGee Chemical Corporation
607 14th Street North
Box 906
Columbus, Mississippi 38701

Dear Mr. Creekmore:

Re: Pretreatment Permit No. PT90021
Draft Permit

Shortly, the Mississippi Natural Resources Permit Board intends to reissue to the above facility a State of Mississippi Pretreatment Permit. The enclosed draft permit contains conditions which we intend to incorporate as part of your final permit.

Please note the effluent limitations, schedule of compliance, monitoring requirements, and monitoring reporting dates in Part I of the permit.

Please be advised that this permit does not relieve the permittee from complying with any requirements which the Publicly Owned Treatment Works (POTW) Authority may deem necessary as a prerequisite to the use of the Authority's sewage system and associated treatment works. Additionally, the POTW Authority is being given an opportunity to comment on the enclosed draft permit.

If you have any comments concerning the information transmitted herewith, please notify this office in writing by February 20, 1989.

Respectfully,

Todd S. Edwards
Industrial Wastewater Control Branch

TSE:cm
Enclosures

MISSISSIPPI DEPARTMENT OF NATURAL RESOURCES
Bureau of Pollution Control
P. O. Box 10385
Jackson, Mississippi 39209
(601) 961-5171

February 1, 1989

Honorable James M. Trotter, Mayor
City of Columbus
523 Main Street
Box 1408
Columbus, Mississippi 39701

Dear Mayor Trotter:

Re: Pretreatment Permit
Kerr McGee Chemical Corporation

Shortly, the Mississippi Natural Resources Permit Board intends to reissue to the above referenced facility a State of Mississippi Pretreatment Permit. The enclosed draft permit contains conditions which we intend to incorporate as part of the final permit.

Please note the effluent limitations, general prohibitions, and notification requirements found in Part I of the permit.

If you have any comments concerning the contents of this permit, please notify this office in writing by February 20, 1989.

Sincerely,

Todd S. Edwards
Industrial Wastewater Control Branch

TSE:cm
Enclosures

Todd 2.

KERR-McGEE CHEMICAL CORPORATION
P.O. BOX 906 • COLUMBUS, MISSISSIPPI 39701

January 31, 1989

RECEIVED
FEB 01 1989
DEPT. OF NATURAL RESOURCE
BUREAU OF POLLUTION CONTROL

AIRBORNE EXPRESS

Director Mississippi Department
of Natural Resources
Bureau of Pollution Control
2380 Highway 80 West
Jackson, Mississippi 39204

Re: Kerr-McGee Chemical Corporation
Forest Products Division
Columbus, Mississippi Facility
NPDES Discharge Monitoring

Report

Dear Sir:

Enclosed are the Discharge Monitoring Reports for the Fourth Quarter of 1988.

This report is required by and prepared specifically for the Mississippi Bureau of Pollution Control. It represents the observed results of measurements and analyses required by the MBPC. It is not intended as an assertion of the accuracy of any instrument, reading or analytical result, nor is it an endorsement of the suitabiltiy or measurement procedure.

There are 5 cases in which our discharge exceeded the limits for oil and grease plus 1 case for phenols in November/December. These occurred while the primary and secondary oil/water separators were undergoing major modifications.

Yours Truly,

G. R. Harrod
Superintendent-Plant
Kerr-McGee Chemical Corporation
Forest Products Division

GRH/ed

Enclosure

cc: File
P.C. Gaskin

Forest Products

KERR-McGEE CHEMICAL CORPORATION
P.O. BOX 906 • COLUMBUS, MISSISSIPPI 39701

May 22, 1989

RECEIVED
MAY 26 1989
Dept. of Natural Resources
Bureau of Pollution Control

Mississippi Department of Natural Resources
Bureau of Polution Control
Attention: Lou Lavalle
P.O. Box 10385
Jackson, MS 39209

Subject: Exceedance Notification April 12 and 13, 1989.
KMCC-FPD Columbus, MS Pre-Treatment
Permit No. PT90021

Dear Mr. Lavalle:

The phenol levels for April 12 and 13, 1989, were in excess of our permit levels. The levels were 98.4 and 81.6 pounds, respectively. The permit allows a maximum of 48.8 pounds. We are not able to give a reasonable explanation for the exceedance.

Phenol levels before and after have been well within the permit requirements as shown below:

DATE	PHENOL LEVEL(Pounds)
4/5	10.7
6	22.6
7	25.0
14	42.5
19	13.1
20	21.5
21	18.6
25	28.5
26	26.7
28	20.3

We are closely monitoring our system to insure that all parameters stay in compliance. We will advise you promptly of any future exceedance.

If you have any questions or commments, please call.

G.R. Harrod

MISSISSIPPI DEPARTMENT OF NATURAL RESOURCES
Bureau of Pollution Control
P. O. Box 10385
Jackson, Mississippi 39209
(601) 961-5171

FEB 1989
RECEIVED

TO: Bobby Whitaker
FROM: Stanley Watkins, NRO
DATE: January 30th, 1989

SUBJECT: Kerr McGee
14TH Avenue
P.O. Box 906
Columbus, MS 39702
Lowndes County

On January 27th, 1989, Randy Byars and I investigated an odor complaint at this facility. We contacted the Plant Manager, Rods Harrod. Ross

This plant has three pressurized tanks where cross ties are treated with cresote. These are loaded three times a day and it takes about eight hours to treat each batch. After being treated, the cross ties are placed over a drip tank before being stacked on the plant yard.

At the time we inspected the plant around 11:00 AM, they were treating cross ties in all three tanks. There was a strong cresote odor at the plant and on the roads surrounding the plant. The area around the treatment tanks did not smell any worse than the rest of the plant. Most of the odor appeared to be coming from the large area of treated cross ties stacked on the plant yard. There was also a water problem with the large number of ditches that drain off the plant property. Rain water washes cresote off the stored cross ties and drains uncontrolled into ditches surrounding the plant.

Mr. Harrod said that they have not had any changes in the process or production level within the past few weeks. He did say that they ususaly take a batch of cross ties out of the treatment tanks between 7:00 and 9:00 in the mornings and 4:00 and 9:00 in the afternoons. This would account for the stronger odor that Mrs. Weeks claims occurs early in the morning and late in the evenings.

I tried to contact Rose Ann Weeks, the Complainant, but could not reach her.

If I can be of any further assistance, please let me know.

Respectfully,

Stanley Watkins

Stanley Watkins

SW:c

ATTACHMENTS

BUREAU OF POLLUTION CONTROL

COMPLAINT FORM

1/25/89 (DATE) 2:45 PM (TIME) [X] AIR [ ] WATER [ ] SOLID [ ] TANK [ ] HAZARDOUS

PERSON REPORTING: [ ] MR. [X] MS. ROSE ANN WEEKS

ADDRESS: COLUMBUS (CITY) LOWNDES (COUNTY) 1096 SOUTHDOWN PARKWAY (STREET OR BOX) 39701 (ZIP CODE)

TELEPHONE HOME: 327-3930
WORK:

COMPLAINT SITE: KERR MCGEE 14TH AVE. COLUMBUS

TEXT OF COMPLAINT: STRONG CRESOTE ODOR BEGINNING AROUND SUNSET AND LASTING UNTIL EARLY MORNING.

COMPLAINT TAKEN BY: DON WATTS (NAME) JACKSON (OFFICE)

REFERRED TO: [X] NORTH REGIONAL OFFICE
[ ] CENTRAL REGIONAL OFFICE
[ ] SOUTH REGIONAL OFFICE

SEND WRITTEN REPORT TO: BOBBY WHITTAKER

REFERRED BY: [X] PHONE [ ] MAIL [ ] COURIER

ROUTED TO R.O. BY: JAY BARKLEY DATE: 1/25/89 KH 4:20

RESOLUTION:

DO INSPECTION OF ACILITY. CHECK FOR ANY TYPE EMISSIONS THEY MAY HAVE. ALSO, ASK ABOUT CHANGES IN PROCESS OR PRODUCTION LEVEL FOR LAST FEW WEEKS. CHECK AREA FOR ODOR AND IF FOUND TRY TO IDENTIFY SOURCE.

KERR-McGEE CHEMICAL CORPORATION
P.O. BOX 906 • COLUMBUS, MISSISSIPPI 39701

RECEIVED
DEC 19 1988
Dept. of Natural Resources
Bureau of Pollution Control

December 16, 1988

Mr. Todd S. Edwards
Mississippi Department of
Natural Resources
Bureau of Pollution Control
P. O. Box 10385
Jackson, Mississippi 39209

Re: PT 90021
Kerr-McGee Chemical Corporation
Columbus, Mississippi

Dear Mr. Edwards,

On November 30, 1988, and December 1, 1988, our discharge slightly exceeded the limitation for oil and grease. This exceedance was due to some major repair alterations being performed on internal piping. We have completed this work and corrected this problem. We will take every precaution to prevent any exceedance from occurring again.

Sincerely,

G. R. Harrod
Plant Superintendent

GRH/kk

cc: Pete Gaskin

FOREST PRODUCTS

MISSISSIPPI DEPARTMENT OF NATURAL RESOURCES
Bureau of Pollution Control
P. O. Box 10385
Jackson, Mississippi 39209
(601) 961-5171

December 15, 1988

Laurdes

FILE COPY

Mr. Pete Creekmore, Plant Superintendent
Kerr-McGee
607 14th Street North - Box 906
Columbus, Mississippi 38701

Dear Mr. Creekmore:

Re: PT90021
Delinquent Discharge
Monitoring Forms

A review of our files indicates that Kerr McGee is delinquent in submitting self monitoring reporting forms for its wastewater disharge for the period July through September 1988. These forms were due no later than October 28, 1988. To avoid further action by this agency, it is necessary that these forms be submitted on or before December 28, 1988. Additionally, please submit a written explanation for the late submittal of these forms.

The next report covers the period of October through December 1988, and is due no later than January 28, 1989.

If you have any questions, please advise.

Respectfully,

Todd S. Edwards
Industrial Wastewater Control Branch

TSE:eb

KERR-McGEE CHEMICAL CORPORATION
P.O. BOX 906 • COLUMBUS, MISSISSIPPI 39701

November 16, 1988

RECEIVED
NOV 18 1988
Dept. of Natural Resources
Bureau of Pollution Control

Mr. Todd S. Edwards
Industrial Wastewater Control Branch
Bureau of Pollution Control
P.O. Box 10385
Jackson, Ms. 39209

Dear Mr. Edwards:

RE: Kerr McGee Chemical Corporation
Forest Products
Columubus Facility
PT 90021

This is in response to the Bureau of Pollution Control, Notice of Violation, dated October 27, 1988, which indicates that the treated effluent from the Kerr McGee Chemical Corporation Forest Products Division, (KMCC - FPD), Columbus Facility was not in compliance on August 16, 1988.

The compliance monitoring conducted by the BPC on August 16 indicates the effluent level of phenol was 56.3 lbs./day, which exceeded the permit limitation of 48.8 lbs./day.

During July a new continous flow meter was installed on the facility's outfall. Following installation of the flow meter it was calibrated by measuring zero flow through the 90 degree v-notched weir located at the flow monitoring station.

During a recent calibration check the flow meter was found to be out of calibration by a factor of 0.6. When this correction factor is applied to the stated flow rate during the BPC's compliance inspection, the phenol level is reduced to 33.8 lbs./day, which is in compliance.

The continous flow meter is now being calibrated weekly and the results recorded. The 24 hour composite sampler is being used to collect samples of the effluent for compliance monitoring with the exception of pH, oil and grease, which is a grab sample. The 24 hour composite sampler contains blue ice during operation, and the sample is refrigerated until shipped to the lab. EPA approved methods are employed in preserving all samples for shipment to the lab.

To ensure future compliance with permit conditions, the frequency of analysis for phenol has been increased from once per week to three per week and shall remain at this frequency indefinitly.

Should you have any questions, please contact me.

Sincerely,

G.R. Harrod
Plant Superintendent

GRH/vt

cc: Jonathon Carraway
P.C. Gaskin

Lanette

KERR-McGEE CHEMICAL CORPORATION
P.O. BOX 906 • COLUMBUS, MISSISSIPPI 39701

Lowndes

RECEIVED
OCT 28 1988
Dept. of Natural Resources
Bureau of Pollution Control

AIRBORNE EXPRESS

Director Mississippi Department
of Natural Resources
Bureau of Pollution Control
2380 Highway 80 West
Jackson, Ms 39204

Re: Kerr-McGee Chemical Corporation
Forest Products Division
Columbus, Ms Facility
NPDES Discharge Monitoring

Report

Dear Sir:

Enclosed are the Discharge Monitoring Reports for the Fourth Quarter of 1987.

This report is required by and prepared specifically for the Mississippi Bureau of Pollution Control. It represents the observed results of measurements and analyses required by the MBPC. It is not intended as an assertion of the accuracy of any instrument, reading or analytical result, nor is it an endorsement of the suitability or measurement procedure.

The PH valves for July are missing due to problems with our meter. The meter is now in operation again.

Yours Truly,

Kerr-McGee Chemical Corporation
Forest Products Division

G.R. Harrod

G.R. Harrod
Facility Superintendent

GRH/lg

Enclosure

cc: File
P.C. Gaskin
J.K. Roseman

FOREST PRODUCTS

Lowndes Co.

FILE COPY

October 27, 1988

Mr. Pete Creekmore
Kerr-McGee Wood Products
607 14th Street North - Box 906
Columbus, Mississippi 38701

Dear Mr. Creekmore:

Re: PT90021
Compliance Sampling

Enclosed is a copy of the analytical laboratory results on samples taken at Kerr McGee on August 16, 1988. These results indicate that the referenced permittee is not in compliance with the effluent limitations of their pretreatment permit. The following violation(s) were noted:

Parameter	Permit Requirement	Sample Results
phenol	48.8 lbs/day	56.3 lbs/day

Please advise the Bureau in writing by November 11, 1988, of the probable causes of these violations and any remedial actions taken to assure future compliance with permit conditions.

If you have any questions concerning this matter, please contact us at 961-5171.

Respectfully,

TSE

Todd S. Edwards
Industrial Wastewater Control Branch

TSE:eb
Enclosure
cc: Warren Foster (w/enclosures)

KERR-McGEE CHEMICAL CORPORATION
KERR-McGEE CENTER • OKLAHOMA CITY, OKLAHOMA 73125

RECEIVED
OCT 11 1988
Dept. of Natural Resources
Bureau of Pollution Control

October 5, 1988

Mr. Todd S. Edwards
Industrial Wastewater Control Section
Bureau of Pollution Control
P. O. Box 10385
Jackson, MS 39209

Dear Mr. Edwards:

Enclosed is the completed application to renew Pretreatment Permit No. PT90021 for the Kerr-McGee Chemical Corporation, Forest Products Division (KMCC-FPD) Columbus facility.

Should you have any questions, please contact Mr. E. L. (Pete) Creekmore, Plant Superintendent, at (601) 328-7551 or P. C. Gaskin at (405) 270-2395.

Sincerely,

KERR-MCGEE CHEMICAL CORPORATION
FOREST PRODUCTS DIVISION

J. H. Bull
Manager, Environmental Control
and Regulatory Affairs

JHB/jlb
enclosure

cc: E. L. Creekmore
P. C. Gaskin

FOREST PRODUCTS

KERR-McGEE CHEMICAL CORPORATION
P.O. BOX 906 • COLUMBUS, MISSISSIPPI 39701

September 21, 1988

RECEIVED
SEP 22 1988
Dept. of Natural Resources
Bureau of Pollution Control

Mr. William Steven Spengler, P. E.
Industrial Waste Water Control Section
Bureau of Pollution Control
P. O. Box 10385
Jackson, Mississippi 39309

Re: Kerr-McGee Chemical Corp.
Forest Products Division
Permit No. 90021

Dear Mr. Spengler:

Due to the unavailability of some of the lab results from our effluent water sampling, we are submitting DMR report for the month of June, 1988.

Measures are being taken to insure that delays such as these will be eliminated in the future, and that all future DMR reports will be submitted on a timely basis.

We apologize for any inconvenience and appreciate your patience and cooperation in this matter.

If you have any questions, please do not hesitate to call.

Regards,

E. L. Creekmore

E. L. Creekmore
Superintendent-Plant
Kerr-McGee Chemical Corp.
Forest Products Division

ELC/hlf

cc: P. C. Gaskin

KERR-McGEE FOREST PRODUCTS

Lowndes

September 15, 1988

Mr. Pete Creekmore
Kerr-McGee
607 14th Street North -
Box 906
Columbus, Mississippi 38701

Dear Mr. Creekmore:

Re: Pretreatment Permit No. PT90021
Approaching Expiration

As you are probably aware, the subject wastewater discharge permit expires on April 30, 1989. State and Federal regulations require that a permittee who wishes to continue to operate under such permit shall submit a written request to the Director for reissuance at least 180 days prior to the expiration date of a State or NPDES permit issued by the Permit Board pursuant to the State law and regulation. In order that the permit can be reissued in a timely manner, we request that you complete the enclosed reapplication forms and return them to this office by September 30, 1988.

We solicit your cooperation and assistance in this matter in order to minimize administrative delays in reissuance.

If you have any questions about the information necessary to complete the forms, please advise.

Very truly yours,

TSE

Todd S. Edwards
Industrial Wastewater Control Section

TSE:eb
Enclosure

FILE COPY

Chandler

KERR-McGEE CHEMICAL CORPORATION
P.O. BOX 906 • COLUMBUS, MISSISSIPPI 39701

July 26, 1988

RECEIVED
JUL 29 1988
Dept. of Natural Resources
Bureau of Pollution Control

Mr. William Steven Spengler, P.E.
Industrial Waste Water Control Section
Bureau of Pollution Control
P. O. Box 10385
Jackson, Mississippi 39309

Re: Kerr-McGee Chemical Corp.
Forest Products Division
Permit No. 90021

Dear Mr. Spengler:

Due to the unavailability of some of the lab results from our effluent water sampling, we can only submit DMR reports for the months of April and May, 1988.

I have been informed by our testing service that the other lab results will be available within about 10 days, so that the DMR report for the month of June can be submitted shortly thereafter.

Measures are being taken to insure that delays such as these will be eliminated in the future, and that all future DMR reports will be submitted on a timely basis.

We apologize for any inconvenience and appreciate your patience and cooperation in this matter.

If you have any questions, please do not hesitate to call.

Regards,

E L Creekmore

E. L. Creekmore
Superintendent-Plant
Kerr-McGee Chemical Corp.
Forest Products Division

ELC/hlf

cc: P. C. Gaskin

FOREST PRODUCTS

KERR-McGEE CHEMICAL CORPORATION
P.O. BOX 906 • COLUMBUS, MISSISSIPPI 39701

RECEIVED
JUL - 8 1988
Dept. of Natural Resources
Bureau of Pollution Control

AIR EXPRESS
RETURN RECEIPT REQUESTED

June 28, 1988

Director Mississippi Department
of Natural Resources
Bureau of Pollution Control
2380 Highway 80 West
Jackson, MS 39204

Re: Kerr-McGee Chemical Corporation
Forest Products Division
Columbus, MS Facility
NPDES Discharge Monitoring Report

Dear Sir:

Enclosed is the March Discharge Monitoring Report for the first Quarter of 1988.

This report is required by and prepared specifically for the Mississippi Bureau of Pollution Control. It represents the observed results of measurements and analyses required by the MBPC. It is not intended as an assertion of the accuracy of any instrument, reading or analytical result, nor is it an endorsement of the suitability of any suitability or measurement procedure.

Yours truly,

Kerr-McGee Chemical Corporation
Forest Products Division

E. L. Creekmore
Facility Superintendent

ELC/hlf

Enclosure

cc: Files
P. C. Gaskin

RECEIVED
JUL 01 1988
KMCC-FOREST PRODUCTS DIVISION
ENVIRONMENTAL & QUALITY CONTROL

FOREST PRODUCTS

FILE COPY

May 30, 1988

Mr. Pete Creekmore
Kerr-McGee, Inc.
607 14th Street North - Box 906
Columbus, Mississippi 38701

Dear Mr. Creekmore:

Re: PT90221
Compliance Sampling

Enclosed is a copy of the analytical laboratory results on samples taken at Kerr-McGee on March 15, 1988. These results indicate that the referenced permittee is in compliance with the effluent limitations of their pretreatment permit. We appreciate your efforts in maintaining water quality and encourage the continued success at your facility.

If you have any questions or if we can be of assistance, please advise.

Respectfully,

Todd S. Edwards
Industrial Wastewater Control Section

TSE:eb
Enclosure

cc: W. Foster (w/Enc.)

KERR-McGEE CHEMICAL CORPORATION
KERR-McGEE CENTER • OKLAHOMA CITY, OKLAHOMA 73125

April 27, 1988

AIRBORNE EXPRESS

Director Mississippi Department
of Natural Resources
Bureau of Pollution Control
2380 Highway 80 West
Jackson, MS 39204

Re: Kerr-McGee Chemical Corporation
Forest Products Division
Columbus, MS Facility
NPDES Discharge Monitoring Report

Dear Sir:

Enclosed are the Discharge Monitoring Reports for the First Quarter of 1988.

There was no discharge during the months of January and February due to shutdown of the producing processing facility. A discharge began again upon startup in late March. The March DMR will be submitted to the BPC upon receipt of the lab report. (Per telecon with Todd Edwards, BPC).

This report is required by and prepared specifically for the Mississippi Bureau of Pollution Control. It represents the observed results of measurements and analyses required by the MBPC. It is not intended as an assertion of the accuracy of any instrument, reading or analytical result, nor is it an endorsement of the suitability of any analytical or measurement procedure.

Sincerely,

KERR-McGEE CHEMICAL CORPORATION
FOREST PRODUCTS DIVISION

E. L. Creekmore
Facility Superintendent

ELC:wpc

Enclosure

cc: File
P. C. Gaskin
J. K. Roseman

Forest Products

1325C

Todd

KERR-McGEE CHEMICAL CORPORATION
P.O. BOX 906 • COLUMBUS, MISSISSIPPI 39701

April 19, 1988

RECEIVED
APR 21 1988
Dept. of Natural Resources
Bureau of Pollution Control

Mr. Todd S. Edwards
Mississippi Department of Natural Resources
Industrial Wastewater Control Section
P. O. Box 10385
Jackson, Mississippi 39209

Dear Mr. Edwards:

In response to your April 1st letter; the Columbus facility has resumed treating on a limited basis. We hope to resume treating on a full time basis during the week of April 25th.

If I can be of further assistance, please do not hesitate to call.

Kerr-McGee Chemical Corp.
Forest Products Division

E. L. Creekmore
Plant Superintendent

ELC/hlf

FILE COPY

MEMORANDUM

TO: Pretreatment File - Kerr-McGee (Columbus, Mississippi)

FROM: Todd S. Edwards - Industrial Wastewater Control Section

SUBJECT: Compliance Evaluation Inspection

DATE: April 14, 1988

On March 23, 1988, I performed a Compliance Evaluation Inspection (CEI) at the above referenced facility. Mr. Don Getz, the facility representative, and I discussed operations and toured the facility.

This wood preserving facility discharges its wastewater into the Columbus Wastewater Activated Sludge Plant. Kerr-McGee pressure treats wood products (mainly crossties) with creosote. The wood is immersed in creosote and pressure treated to impregnate the wood with the creosote preservative. After this process is completed, a partial vacuum is created inside the pressure cylinder to remove the excess preservative.

The wastewater from this facility is generated via the vacuum process described above (approximately 300 gallons per charge). Other wastewater includes that which is generated from drying virgin wood (6,000 gallons per charge) and the rainwater which falls on the facility grounds (1,000 gallons per inch of rain).

This facility had not treated a charge since December 5, 1987 due to the ongoing construction of a drip pad at the facility. The only water being treated was rainwater and blowdown from cleaning operations that were taking place at the time of the inspection.

Kerr-McGee's discharge monitoring records dated back to May of 1984, more than the requiste three (3) years as required by their pretreatment permit.

TSE:eb

April 1, 1988

FILE COPY

Mr. Pete Creekmore, Plant Superintendent
Kerr-McGee - Forest Products Division
607 14th Street North
Box 906
Columbus, Mississippi 39701

Dear Mr. Creekmore:

Re: Pretreatment Permit No. PT90021
Compliance Evaluation Inspection

Enclosed is a copy of the compliance evaluation inspection report that was performed at the Kerr-McGee - Forest Products Division on March 23, 1988. The results of this inspection should be used by you as a guide for complying with requirements and limitations as stated by your pretreatment permit. The inspection revealed that the facility was in compliance.

Also, please inform this office, in writing, as to when Kerr-McGee plans to resume operations at its Columbus facility so that this office can obtain a representative sample of the wastewater discharged at your facility.

If you have any questions concerning this matter, please contact us at 961-5171.

Respectfully,

Todd S. Edwards
Industrial Wastewater Control Section

TSE:cm
Enclosures
cc: Mr. Don Gets
Mr. Warren Foster (w/enclosure)

KERR-McGEE CHEMICAL CORPORATION
KERR-McGEE CENTER • OKLAHOMA CITY, OKLAHOMA 73125

January 25, 1988

AIRBORNE EXPRESS

Director Mississippi Department
of Natural Resources
Bureau of Pollution Control
2380 Highway 80 West
Jackson, MS 39204

Re: Kerr-McGee Chemical Corporation
Forest Products Division
Columbus, MS Facility
NPDES Discharge Monitoring

Report

Dear Sir:

Enclosed are the Discharge Monitoring Reports for the Fourth Quarter of 1987.

This report is required by and prepared specifically for the Mississippi Bureau of Pollution Control. It represents the observed results of measurements and analyses required by the MBPC. It is not intended as an assertion of the accuracy of any instrument, reading or analytical result, nor is it an endorsement of the suitability of any suitability or measurement procedure.

Yours truly,

KERR-MCGEE CHEMICAL CORPORATION
FOREST PRODUCTS DIVISION

E. L. Creekmore
Facility Superintendent

ELC:wpc

Enclosure

cc: File
P. C. Gaskin
J. K. Roseman

KERR-McGEE CHEMICAL CORPORATION
P.O. BOX 906 • COLUMBUS, MISSISSIPPI 39701

October 21, 1987

RECEIVED
OCT 27 1987
Dept. of Natural Resources
Bureau of Pollution Control

AIRBORNE EXPRESS
CERTIFIED MAIL - RETURN RECEIPT REQUESTED

Director Mississippi Department
of Natural Resources
Bureau of Pollution Control
2380 Highway 80 West
Jackson, MS 39204

RE: Kerr-McGee Chemical Corporation
Forest Products Division
Columbus, MS Facility
NPDES Discharge Monitoring

Report

Dear Sir:

77 TSR2

Enclosed are the Discharge Monitoring Reports for the third Quarter of 1987.

This report is required by and prepared specifically for the Mississippi Bureau of Pollution Control. It represents the observed results of measurements and analyses required by the MBPC. It is not intended as an assertion of the accuracy of any instrument, reading or analytical result, nor is it an endorsement of the suitability of any suitability or measurement procedure.

Yours truly,

KERR-McGEE CHEMICAL CORPORATION
FOREST PRODUCTS DIVISION

E. L. Creekmore

E. L. Creekmore
Facility Superintendent

ELC:hlf

Enclosure

cc: File
P. C. Gaskin

FOREST PRODUCTS

KERR-McGEE CHEMICAL CORPORATION
P.O. BOX 789 • MERIDIAN, MISSISSIPPI 39301

RECE
OCT 27
Dept. of Natural Reso.
Bureau of Pollution Con.

October 20, 1987

CERTIFIED MAIL RETURN RECEIPT REQUESTED

Mr. Jerry W. Cain, P.E.
Industrial Wastewater Control Section
Bureau of Pollution Control
Mississippi Department of Natural Resources
P. O. Box 10385
Jackson, Mississippi 39309

Dear Mr. Cain,

Re: Pretreatment Permit PT90024
Kerr McGee Chemical Corporation
Meridian Facility

Enclosed are the discharge monitoring reports for the third quarter of 1987.

During the third quarter no excursions were noted.

This discharge monitoring report is required by and prepared specifically for the Mississippi Bureau of Pollution Control. It represents the observed results of measurements and analyses required by the M.B.P.C. It is not intended as an assertion of the accuracy of any instrument, reading or analytical results nor is it an endorsement of the suitablilty or any analytical or measurement procedure.

Should you have any questions, please contact me.

Yours truly,

KERR MCGEE CHEMICAL CORP.
FOREST PRODUCTS DIVISION

H. L. Dearman
Plant Manager

HLD
n

Encl.

FOREST PRODUCTS

KERR-McGEE CHEMICAL CORPORATION
P.O. BOX 906 • COLUMBUS, MISSISSIPPI 39701

September 21, 1987

RECEIVED
SEP 23 1987
Dept. of Natural Resources
Bureau of Pollution Control

Mr. William Steven Spengler, P. E.
Industrial Waste Water Control Section
Bureau of Pollution Control
P. O. Box 10385
Jackson, Mississippi 39309

Re: Kerr-McGee Chemical Corporation
Forest Products Division
Permit #90021

Dear Mr. Spengler:

On August 11, 1987, test show that we may have exceeded our permit limits for Phenols. However, we believe that this indication is most certainly a false positive caused by statistical abnormalities.

Steps have been instituted to ensure a more accurate flow reading and sample procedure. The Columbus Plant will be installing a Stevens Continuance Water Meter, and a 24 Hour Composite Sampler. We have also increased the frequency of our Phenol sampling from once per week to three times per week.

Once these devices have been installed at the Columbus Plant, we feel that we will no longer be subject to false positive readings.

If you have any questions, or if I can be of any assistance, please do not hesitate to call me at 1-601-328-7551.

Regards,

Kerr-McGee Chemical Corporation
Forest Products Division

E. L. Creekmore

E. L. Creekmore
Superintendent-Plant

ELC/hlf

cc: P. C. Gaskin

FOREST PRODUCTS

KERR-McGEE CHEMICAL CORPORATION
P.O. BOX 906 • COLUMBUS, MISSISSIPPI 39701

September 21, 1987

Mr. William Steven Spengler, P. E.
Industrial Waste Water Control Section
Bureau of Pollution Control
P. O. Box 10385
Jackson, Mississippi 39309

Re: Kerr-McGee Chemical Corporation
Forest Products Division
Permit #90021

Dear Mr. Spengler:

On August 11, 1987, test show that we may have exceeded our permit limits for Phenols. However, we believe that this indication is most certainly a false positive caused by statistical abnormalities.

Steps have been instituted to ensure a more accurate flow reading and sample procedure. The Columbus Plant will be installing a Stevens Continuance Water Meter, and a 24 Hour Composite Sampler. We have also increased the frequency of our Phenol sampling from once per week to three times per week.

Once these devices have been installed at the Columbus Plant, we feel that we will no longer be subject to false positive readings.

If you have any questions, or if I can be of any assistance, please do not hesitate to call me at 1-601-328-7551.

Regards,

Kerr-McGee Chemical Corporation
Forest Products Division

E. L. Creekmore

E. L. Creekmore
Superintendent-Plant

ELC/hlf

cc: P. C. Gaskin

FOREST PRODUCTS

KERR-McGEE CHEMICAL CORPORATION
KERR-McGEE CENTER • OKLAHOMA CITY, OKLAHOMA 73125

July 27, 1987

RECEIVED
JUL 30 1987
Dept. of Natural Resources
Bureau of Pollution Control

AIRBORNE EXPRESS
CERTIFIED MAIL - RETURN RECEIPT REQUESTED

Director Mississippi Department
of Natural Resources
Bureau of Pollution Control
2380 Highway 80 West
Jackson, MS 39204

RE: Kerr-McGee Chemical Corporation
Forest Products Division
Columbus, MS Facility
NPDES Discharge Monitoring
Report

Dear Sir:

Enclosed are the Discharge Monitoring Reports for the Second Quarter of 1987.

This report is required by and prepared specifically for the Mississippi Bureau of Pollution Control. It represents the observed results of measurements and analyses required by the MBPC. It is not intended as an assertion of the accuracy of any instrument, reading or analytical result, nor is it an endorsement of the suitability of any suitability or measurement procedure.

Yours truly,

KERR-McGEE CHEMICAL CORPORATION
FOREST PRODUCTS DIVISION

E. L. Creekmore
Facility Superintendent

ELC:wpc

Enclosure

cc: File
P. C. Gaskin

Forest Products

0744C

FILE COPY

June 26, 1987

Mr. B. W. Boisseau, Plant Superintendent
Kerr-McGee
P. O. Box 906
Columbus, Mississippi 38701

Dear Mr. Boisseau:

Re: PT90021
Compliance Sampling

Enclosed is a copy of the analytical laboratory results on samples taken at Kerr-McGee Wood Products in Columbus, Mississippi on March 12, 1987. These results indicate that the referenced permittee is in compliance with the effluent limitations of their pretreatment permit. We appreciate your efforts in maintaining water quality and encourage the continued success at your facility.

If you have any questions or if we can be of assistance, please advise.

Respectfully,

Johnnie R. Butler
Industrial Wastewater Control Section

JRB:dmh
Enclosure

KERR-McGEE CHEMICAL CORPORATION
KERR-McGEE CENTER • OKLAHOMA CITY, OKLAHOMA 73125

RECEIVED
APR 30 1987
DEPT. OF NATURAL RESOURCE
BUREAU OF POLLUTION CONTROL

CERTIFIED MAIL
RETURN RECEIPT REQUESTED

April 27, 1987

Director, Mississippi Department
of Natural Resources
Bureau of Pollution Control
P.O. Box 10385
Jackson, MS 39209

Re: Kerr-McGee Chemical Corporation
Forest Products Division
Columbus, Mississippi Facility
NPDES Discharge Monitoring Report
First Quarter 1987

Dear Sir:

Enclosed are the First Quarter 1987 Discharge Monitoring Reports for the Kerr-McGee Chemical Corporation, Forest Products Division, Columbus facility.

There were no excursions during the First Quarter.

This report is required by and prepared specifically for the Mississippi Bureau of Pollution Control. It represents the observed results of measurements and analyses required by the MBPC. It is not intended as an assertion of the accuracy of any instrument, reading, or analytical result, nor is it an endorsement of the suitability of any analytical or measurement procedure.

Respectfully,

KERR-MCGEE CHEMICAL CORPORATION
FOREST PRODUCTS DIVISION

P. C. Gaskin, Staff Specialist
Environmental Control &
Regulatory Affairs

PCG:kr
Enclosures

xc: E. L. Creekmore
D. R. Getz
J. K. Roseman

FOREST PRODUCTS

WSS

KERR-McGEE CHEMICAL CORPORATION
KERR-McGEE CENTER • OKLAHOMA CITY, OKLAHOMA 73125

RECEIVED
MAR 11 1987
DEPT. OF NATURAL RESOURCE
BUREAU OF POLLUTION CONTROL

March 9, 1987

Wm. Stephen Spengler, P.E.
Industrial Wastewater Control Section
Bureau of Pollution Control
P.O. Box 10385
Jackson, MS 39209

Re: Kerr-McGee Chemical Corporation
Forest Products Division
Columbus, Mississippi Facility

Dear Mr. Spengler:

This serves as a response to your verbal request that Kerr-McGee Chemical Corporation, Forest Products Division (KMCC-FPD), Columbus facility, conduct a study of the impact, if any, its wastewater discharge may have on the publicly owned treatment works. This letter serves as the report of the study.

The wastewater study was conducted from October 20, 1986 through October 31, 1986. Wastewater samples were taken simultaneously from the KMCC-FPD effluent, POTW influent, and POTW effluent, and analyzed for phenol. Table 1 presents the results of the study.

It is evident from the data presented in Table 1 that the KMCC-FPD discharge has no effect on the City's municipal sanitary system. The influent phenol concentration of <0.25 mg/l is considerably less than the level of inhibition for activated sludge (50-200 ppm), and for nitrification (4-10 ppm).

The phenol levels in the City's effluent are consistently low, with an average of 0.06 mg/l for the six day monitoring period. The data indicates the municipal treatment system can remove 70% of the incoming phenolic load. It is KMCC's belief that an activated sludge system similar to the City of Columbus' should remove greater than 70%. However, the resultant effluent concentration of 0.05-0.06 mg/l is typically the lowest achievable effluent concentration an activated sludge system can achieve, which, therefore, limits the percent removed.

FOREST PRODUCTS

The POTW's effluent to the Luxapalila River is well below the Federal Water Quality Criteria for freshwater aquatic life, which is 10.2 mg/l (acute) and 2.5 mg/l (chronic).

In summary, KMCC-FPD believes the present levels of concentrations of phenol do not adversely affect the City's municipal sanitary system. The present permit limitation of 48.8 lbs/day is amply sufficient to ensure upsets do not occur within the municipal's sanitary sewer system. In the event that effluent concentrations should exceed the permitted value, or cause an upset, KMCC-FPD will be prepared to provide additional pretreatment.

Sincerely,

KERR-MCGEE CHEMICAL CORPORATION
FOREST PRODUCTS DIVISION

P. C. Gaskin, Staff Specialist
Environmental Control &
Regulatory Affairs

PCG:kr
Attachment

xc: P. L. Compton
J. K. Roseman
J. H. Bull

KERR-McGEE CHEMICAL CORPORATION
KERR-McGEE CENTER • OKLAHOMA CITY, OKLAHOMA 73125

January 27, 1987

AIRBORNE

Mr. Steven Spengler
Bureau of Pollution Control
P. O. Box 10385
Jackson, MS 39209

Re: Kerr-McGee Chemical Corporation
Forest Products Division
Columbus, Mississippi Facility
Discharge Monitoring Report

Dear Mr. Spengler:

Enclosed are the Discharge Monitoring Reports for the Fourth Quarter 1986 for the referenced facility.

These discharge monitoring reports are required by and prepared specifically for the MBPC. It represents the observed results of measurements and analyses required by the MBPC. It is not intended as an assertion of the accuracy of any instrument reading or analytical results, nor is it an endorsement of the suitability of any analytical or measurement procedure.

Sincerely,

KERR-McGEE CHEMICAL CORPORATION
FOREST PRODUCTS DIVISION

P. C. Gaskin, Staff Specialist
Environmental Control &
Regulatory Affairs

PCG/jn

cc: B. W. Boisseau
J. K. Roseman

FOREST PRODUCTS

FILE COPY

October 28, 1986

Mr. Jeffrey H. Bull
Kerr-McGee Chemical Corporation
Kerr-McGee Center
Oklahoma City, Oklahoma 73125

Dear Mr. Bull:

Re: PT90021
Compliance Sampling
Columbus, Mississippi Facility

Enclosed is a copy of the analytical laboratory results on samples taken at Kerr-McGee's Columbus, Mississippi facility on August 14, 1986. These results indicate that the referenced permittee is in compliance with the effluent limitations of their pretreatment permit. We appreciate your efforts in maintaining water quality and encourage the continued success at your facility.

If you have any questions or if we can be of assistance, please advise.

Respectfully,

Wm. Stephen Spengler, P.E., Assistant Coordinator
Industrial Wastewater Control Section

WSS:hdb
Enclosure
cc: Mr. P. C. Gaskin (w/enclosure)
Mr. B. W. Boisseau (w/enclosure)

KERR-McGEE CHEMICAL CORPORATION
KERR-McGEE CENTER • OKLAHOMA CITY, OKLAHOMA 73125

CERTIFIED MAIL
RETURN RECEIPT REQUESTED

RECEIVED
OCT 22 1986
DEPT. OF NATURAL RESOURCE
BUREAU OF POLLUTION CONTROL

October 17, 1986

Mr. Steven Spengler
Bureau of Pollution Control
P. O. Box 10385
Jackson, MS 39209

Re: Kerr-McGee Chemical Corporation
Forest Products Division
Columbus, Mississippi Facility
Discharge Monitoring Report

Dear Mr. Spengler:

Enclosed are the Discharge Monitoring Reports for the Third Quarter 1986 for the referenced facility.

These discharge monitoring reports are required by and prepared specifically for the MBPC. It represents the observed results of measurements and analyses required by the MBPC. It is not intended as an assertion of the accuracy of any instrument reading or analytical results, nor is it an endorsement of the suitability of any analytical or mreasurement procedure.

Sincerely,

KERR-MCGEE CHEMICAL CORPORATION
FOREST PRODUCTS DIVISION

P. C. Gaskin, Staff Specialist
Environmental Control &
Regulatory Affairs

cc: J. H. Bull
B. W. Boisseau
J. K. Roseman

Forest Products

MISSISSIPPI DEPARTMENT OF NATURAL RESOURCES
Bureau of Pollution Control
P. O. Box 10385
Jackson, Mississippi 39209
(601) 961-5171

TO: Steve Spengler
FROM: Kenny Hill, NRO
DATE: August 13th, 1986

SUBJECT: Sampling Inspection at Kerr McGee Wood Products
Lowndes County

On August 13th, 1986, I set up a sampler at the referenced facility. From the time I arrived at the facility until the sample was set up took almost an hour. The reason given was permission had to be obtained from Oklahoma City to allow me to take samples. The time went as follows:

9:22 AM. I arrived at Kerr McGee Wood Products Office in Columbus and signed in. I was told Mr. Getz would be with me in a few minutes.

9:30 AM. Secretary called to Oklahoma City to obtain permission for me to sample. She found out that the only person that could give that permission was in Indianoplis in a meeting. The Oklahoma City Office would call him and get him to call Columbus.

9:56 AM. Permission was obtained to sample. I was told Mr. Getz would be with me shortly.

10:14 AM. Mr. Getz came out to meet me.

10:19 AM. Started setting up sampler.

There is no reason why setting up a composite sampler should take one hour.

If I can be of any further assistance, please advise.

I called P. Gaskin & told him of this incident
He said their SOP was:
1. Call OK City
2. If they couldn't reach anyone use their best judgement

WQ-5

KERR-McGEE CHEMICAL CORPORATION
KERR-McGEE CENTER • OKLAHOMA CITY, OKLAHOMA 73125

RECEIVED
JUL 28 1986
DEPT. OF NATURAL RESOURCE
BUREAU OF POLLUTION CONTROL

July 25, 1986

CERTIFIED MAIL
RETURN RECEIPT REQUESTED

Mississippi Department of
Natural Resources
Bureau of Pollution Control
P. O. Box 10385
Jackson, MS 39209

Attn: Steve Spengler

Re: Kerr-McGee Chemical Corporation
Forest Products Division
Columbus, Mississippi Facility
Permit No. 90021
NPDES Discharge Monitoring Report

Dear Sir:

Enclosed are the Discharge Monitoring Reports for the Second Quarter 1986.

One excursion occured for phenol during April and two during May. Kerr-McGee attributes the excursions to two possible causes: the quality control procedures utilized by the analytical laboratory, or the grab sample by the facility was taken during a surge of discharge by dewatering the impoundment during closure activity. The facility has changed to another laboratory, which employs a better quality control and assurance program and analytical procedures. Since closure was completed on June 16, 1986, future surges of effluent should not occur.

As discussed during our meeting in your office on July 21, 1986, Kerr-McGee has agreed to conduct a study of phenol levels in the influent and effluent of the POTW. Details of the project will be developed in the near future for your review and approval, and approval by the POTW.

This report is required by and prepared specifically for the Mississippi Bureau of Pollution Control. It represents the observed results of measurements and analyses required by the MBPC. It is not intended as an assertion of the accuracy of any instrument, reading or analytical results, nor is it an endorsement of the stability of any analytical or measurement procedure.

Very truly yours,

KERR-MCGEE CHEMICAL CORPORATION
FOREST PRODUCTS DIVISION

P. C. Gaskin, Staff Specialist
Environmental Control &
Regulatory Affairs

PCG:kr
Enclosures

cc: B. W. Boisseau
J. K. Roseman

KERR-McGEE CHEMICAL CORPORATION
P.O. BOX 906 • COLUMBUS, MISSISSIPPI 39701

June 30, 1986

RECEIVED
JUL - 2 1986
DEPT. OF NATURAL RESOURCE
BUREAU OF POLLUTION CONTROL

Steve Spengler P.E.
Industrial Waste Water Control Section
Bureau of Polution Control
Mississippi Department of Natural Resources
P.O. Box 10385
Jackson, Ms. 39209

Dear Mr. Spengler:

Please be advised that on May 19, the Kerr McGee Chemical Corporation Columbus facility discharged 56 # of phenol which exceeded the permit limitations.

Again on the 28th of May the facility discharged 353# of phenol which exceeded the permit.

We attribute the excessive phenol levels to the closure of the surface impoundments that were being conducted during the month of May. We have notified Mr. Kenneth Hood with the city of Columbus Water Department of the above discharges. To the best of our knowledge, the city system was not adversly affected by these discharges.

The closure of the surface impoundments was completed on June 16.

Sincerely,

B.W. Boisseau

B.W. Boisseau
Superintendent, Plant

cc: P.C. Gaskin
Jeff Bull
J.D. Armitage
W.J. Broussard

KERR-McGEE CHEMICAL CORPORATION
KERR-McGEE CENTER • OKLAHOMA CITY, OKLAHOMA 73125

April 14, 1986

RECEIVED
APR 17 1986
DEPT. OF NATURAL RESOURCE
BUREAU OF POLLUTION CONTROL

CERTIFIED-RETURN RECEIPT REQUESTED

Mr. William Stephen Spengler, P. E.
Industrial Wastewater Control
Bureau of Pollution Control
P. O. Box 10385
Jackson, MS 39209

RE: PT No. 90021
Columbus Facility

Dear Mr. Spengler:

Enclosed are the DMR's for the First Quarter 1986 period. No excurions occurred.

We would appreciate your assistance in obtaining revised DMR forms to fit our discharge monitoring requirements. Please note we had to pen in the monitoring results for total phenols.

Sincerely,

KERR-MCGEE CHEMICAL CORPORATION
FOREST PRODUCTS DIVISION

P. C. Gaskin
Environmental & Quality Control

PCG:jw
Enclosures

cc: B. W. Boisseau

FOREST PRODUCTS

~~JPT~~ cont 2 Spengler

KERR-McGEE CHEMICAL CORPORATION
KERR-McGEE CENTER • OKLAHOMA CITY, OKLAHOMA 73125

RECEIVED
JAN 27 1986
DEPT. OF NATURAL RESOURCE
BUREAU OF POLLUTION CONTROL

January 23, 1986

CERTIFIED MAIL-RETURN RECEIPT REQUESTED

Director Mississippi Department
of Natural Resources
Bureau of Pollution Control
P. O. Box 10385
Jackson, MS 39209

Re: Kerr-McGee Chemical Corporation
Forest Products Division
Columbus, MS Facility
NPDES Discharge Monitoring Report

Dear Sir:

Enclosed are the Discharge Monitoring Reports for the Fourth Quarter of 1985.

This report is required by and prepared specifically for the Mississippi Bureau of Pollution Control. It represents the observed results of measurements and analyses required by the MBPC. It is not intended as an assertion of the accuracy of any instrument, reading or analytical result, nor is it an endorsement of the suitability of any analytical or measurement procedure.

Yours truly,

KERR-McGEE CHEMICAL CORPORATION
FOREST PRODUCTS DIVISION

P. C. Gaskin
Environmental & Governmental Affairs

PCG/jn

enc.

cc: B. W. Boisseau - w/o attach
File

KERR-McGEE CHEMICAL CORPORATION
KERR-McGEE CENTER • OKLAHOMA CITY, OKLAHOMA 73125

RECEIVED
OCT 23 1985
DEPT. OF NATURAL RESOURCE
BUREAU OF POLLUTION CONTROL

October 22, 1985

CERTIFIED MAIL-RETURN RECIEPT REQUESTED

Director Mississippi Department
of Natural Resources
Bureau of Pollution Control
P. O. Box 10385
Jackson, MS 39209

Re: Kerr-McGee Chemical Corporation
Forest Products Division
Columbus, MS Facility
Permit No. 90021
NPDES Discharge Monitoring Report

Dear Sir:

Enclosed are the Discharge Monitoring Reports for the Third Quarter of 1985.

This report is required by and prepared specifically for the Mississippi Bureau of Pollution Control. It represents the observed results of measurements and analyses required by the MBPC. It is not intended as an assertion of the accuracy of any instrument, reading or analytical result, nor is it an endorsement of the suitability of any analytical or measurement procedure.

Yours truly,

KERR-McGEE CHEMICAL CORPORATION
FOREST PRODUCTS DIVISION

P. C. Gaskin
Environmental & Quality Control

PCG/jl

enc.

cc: W. J. Broussard - w/o attach
B. W. Boisseau - 2/attach
J. H. Bull - 2/attach

FOREST PRODUCTS

Founder

FILE COPY

September 17, 1985

Mr. P. C. Gaskin
Environmental and Quality Control
Kerr McGee Chemical Corporation
Kerr-McGee Center
Oklahoma City, Oklahoma 73125

Dear Mr. Gaskin:

Re: Pretreatment Permit No. PT90021
Compliance Sampling
Columbus, Mississippi Facility

Enclosed is a copy of the analytical laboratory results on samples taken at Kerr-McGee - Columbus on August 15, 1985. These results indicate that the referenced permittee is in compliance with the effluent limitations of their pretreatment permit. We appreciate your efforts in maintaining water quality and encourage the continued success at your facility.

If you have any questions or if we can be of assistance, please advise.

Respectfully,

Wm. Stephen Spengler, P. E.
Industrial Wastewater Control Section

WSS:els
Enclosure
cc: Mr. Al Herndon, P. E., EPA (w/enclosures)

KERR-McGEE CHEMICAL CORPORATION
KERR-McGEE CENTER • OKLAHOMA CITY, OKLAHOMA 73125

July 19, 1985

CERTIFIED MAIL-RETURN RECEIPT REQUESTED

Director
Mississippi Department of
Natural Resources
Bureau of Pollution Control
P. O. Box 10385
Jackson, MS 39209

Re: Kerr-McGee Chemical Corporation
Forest Products Division
Columbus, MS Facility
Permit No. 90021
NPDES Discharge Monitoring Report

Dear Sir:

Enclosed are the Discharge Monitoring Reports for the Second Quarter 1985 period.

This report is required by and prepared specifically for the Mississippi Bureau of Pollution Control. It represents the observed results of measurements and analyses required by the MBPC. It is not intended as an assertion of the accuracy of any instrument, reading or analytical result, nor is it an endorsement of the suitability of any analytical or measurement procedure.

Very truly yours,

KERR-McGEE CHEMICAL CORPORATION
FOREST PRODUCTS DIVISION

P. C. Gaskin
Environmental & Quality Control

PCG/jl

enc.

cc: W. J. Broussard - w/o attach
B. W. Boisseau - 2/attach
J. H. Bull - 2/attach

FOREST PRODUCTS

KERR-McGEE CHEMICAL CORPORATION
KERR-McGEE CENTER • OKLAHOMA CITY, OKLAHOMA 73125

RECEIVED
1985 APR 30 AM 9:00
MISSISSIPPI DEPARTMENT OF NATURAL RESOURCES BUREAU OF POLLUTION CONTROL

April 23, 1985

CERTIFIED MAIL-RETURN RECEIPT REQUESTED

Director
Mississippi Department of
Natural Resources
Bureau of Pollution Control
P. O. Box 10385
Jackson, MS 39209

Re: Kerr-McGee Chemical Corporation
Forest Products Division
Columbus, MS Facility
Permit No. 90021
NPDES Discharge Monitoring Report

Dear Sir:

Enclosed are the Discharge Monitoring Reports for the First Quarter 1985 period.

This report is required by and prepared specifically for the Mississippi Bureau of Pollution Control. It presents the observed results of measurements and analyses required by the MBPC. It is not intended as an assertion of the accuracy of any instrument, reading or analytical result, nor is it an endorsement of the suitability of any analytical or measurement procedure.

Very truly yours,

KERR-McGEE CHEMICAL CORPORATION
FOREST PRODUCTS DIVISION

P. C. Gaskin
Environmental & Quality Control

PCG/jl

enc.

cc: W. J. Broussard - w/o attach
B. W. Boisseau - w/attach
J. H. Bull - a/attach

FOREST PRODUCTS

March 25, 1985

FILE COPY

Mr. P. C. Gaskin
Environmental and Quality Control
Kerr-McGee Chemical Corporation
Kerr-McGee Center
Oklahoma City, Oklahoma 73125

Dear Mr. Gaskin:

Re: Pretreatment Permit No. PT90021
Columbus Facility

This is to advise that the above referenced permit has been modified to reflect changes in your wastewater treatment facility. Please find pages 2, 3, and 4 which should be inserted in your permit.

If you have any questions concerning this modification, please advise.

Sincerely,

Wm. Stephen Spengler, P.E.
Industrial Wastewater Control Section

WSS:ps
Enclosure
cc: Mr. Reynolds R. Ridgley, General Manager (w/enc)

KERR-McGEE CHEMICAL CORPORATION
KERR-McGEE CENTER • OKLAHOMA CITY, OKLAHOMA 73125

RECEIVED
1985 FEB -5 AM 9:2
MISSISSIPPI DEPARTMENT OF NATURAL RESOURCES
BUREAU OF POLLUTION CONTROL

January 30, 1985

CERTIFIED MAIL
RETURN RECEIPT REQUESTED

Director
Mississippi Department of
Natural Resources
Bureau of Pollution Control
P. O. Box 10385
Jackson, MS 39209

Re: Kerr-McGee Chemical Corporation
Forest Products Division
Columbus, MS Facility
Permit No. 90021
NPDES Discharge Monitoring Report

Dear Dir:

Enclosed are the Discharge Monitoring Reports for the Fourth Quarter 1984 period.

This report is required by and prepared specifically for the Mississippi Bureau of Pollution Control. It presents the observed results of measurements and analyses required by the MBPC. It is not intended as an assertion of the accuracy of any instrument, reading or analytical result, nor is it an endorsement of the suitability of any analytical or measurement procedure.

Very truly yours,

KERR-McGEE CHEMCIAL CORPORATION
FOREST PRODUCTS DIVISION

P. C. Gaskin
Environmental & Quality Control

PCG/jl

enc.

cc: W. J. Broussard - w/o attach
B. H. Compton - w/attach
J. H. Bull - w/attach

FOREST PRODUCTS

KERR-McGEE CHEMICAL CORPORATION
KERR-McGEE CENTER • OKLAHOMA CITY, OKLAHOMA 73125

RECEIVED
1984 DEC 27 AM 9:59
MISSISSIPPI DEPARTMENT
OF NATURAL RESOURCES
BUREAU OF POLLUTION
CONTROL

December 20, 1984

Wm. Stephen Spengler, P. E.
Industrial Wastewater Control Section
Mississippi Department of Natural
Resources
Bureau of Pollution Control
P. O. Box 10385
Jackson, Mississippi 39209

Re: Pretreatment Permit No. PT-90021
Columbus, Mississippi Facility

Dear Mr. Spengler:

This serves as a response to your letter of December 3, 1984, which included a draft pretreatment permit for the Kerr-McGee Chemical Corporation, Forest Products Division, Columbus, Mississippi facility. The permit will establish effluent limits the facility must meet when discharging to the City of Columbus, Publicly Owned Treatment Works.

The rationale used to develop the permit limits was based upon the water quality standards for the Luxapallila Creek into which the City of Columbus discharges and the assumption that the municipal treatment system can remove 70% of the incoming phenolic load. It is Kerr-McGee's contention that an activated sludge system similar to the City of Columbus' can remove greater than 70% of the incoming phenolic load; however, the rationale at this point is acceptable until such time that specific operating experience is gained with regard to phenol removal at the Columbus treatment facility. A review of the math used to define the effluent phenol limit indicates an error was made. The allowable phenolic loading to the Luxapallila Creek of 18.3 lbs/day was divided by 0.7 to account for the 70% phenol removal by the POTW. This calculation is in error and should be corrected to show the allowable phenol loading of 18.3 lbs/day to be divided by 0.3 rather than 0.7 to allow for the 70% removal by the POTW. This correction will result in a phenol limit of 48.8 lbs/day rather than the previously calculated 20.9 pounds per day.

The draft permit contains a daily maximum flow limit of 15,000 gpd. The designation of a daily flow limit is not consistent with the establishment of mass limits for the specific contaminant. It is understood that the flow limit was based upon the designated maximum flow indicated on the permit application. However, recent modifications in the production

FOREST PRODUCTS

process as required by Kerr-McGee Chemical Corporation customers has resulted in an increase in the wastewater flow. The increase in flow will not result in an increase in effluent waste loads of the individual contaminants in terms of pounds per day. Kerr-McGee Chemical Corporation has every intention of meeting the individual contaminant mass waste loads; however, it does not want to be constrained by a flow limit. There fore, we are requesting that the flow limit be dropped from the permit. The facility will continue to measure the flow and report the flow daily as required by the monitoring requirements.

A review of the monitoring schedule indicates oil and grease sampling three times per week. During previous discussions with the state it is understood the sampling requirements can be relaxed to once a month provided the plants operating experience indicates discharge concentrations well within the limit of one hundred parts per million. Kerr-McGee would like to reserve the option to develop six months of operating experience and subsequently petition the Mississippi Bureau of Polution Control for relaxation of the oil and grease monitoring requirement.

If you should have any questions regarding the contents of this letter, please call me at 405/270-2395.

Sincerely,

KERR-McGEE CHEMICAL CORPORATION
FOREST PRODUCTS DIVISION

P. C. Gaskin
nc

P. C. Gaskin
Environmental & Quality Control

PCG jl

cc: B. W. Boisseau

Lowndes

December 13, 1984

FILE COPY

Mr. Reynolds R. Ridgley,
General Manager
City of Columbus
Light and Water Department
Columbus, Mississippi 39701

Dear Mr. Ridgley:

Re: Kerr-McGee
Columbus, Mississippi

As you are probably aware, Kerr-McGee is proposing to substantially modify its existing wastewater pretreatment system in Columbus. The reason for this modification is their desire to close-out the lagoon system which is presently being utilized. The proposed pretreatment scheme will consist of oil/water separation followed by chemical flocculation. The information submitted to our office indicates that the characteristics of the wastewater will be of significantly less quality than that which is presently being discharged to the City. Due to the proposed modification it will be necessary to modify their existing pretreatment permit. Enclosed find a copy of the proposed modified permit. Note that we have included a total phenols limit as well as a rationale for the derivation of this limit. Please review this proposed draft permit modification and also determine if this discharge will be compatible with the Columbus Sewer Use Ordinance.

If you have any questions concerning this matter, please inform us in writing by December 31, 1984.

Sincerely,

Wm. Stephen Spengler, P. E.
Industrial Wastewater Control Section

WSS:hdb
Enclosure
cc: Mr. Marlin Pittman, City of Columbus
Mr. Pete C. Gaskin, Kerr-McGee Chemical Corporation

December 3, 1984

FILE COPY

Mr. P. C. Gaskin, Environmental
and Quality Control
Kerr-McGee Chemical Corporation
Kerr-McGee Center
Oklahoma City, Oklahoma 73125

Dear Mr. Gaskin:

Re: Pretreatment Permit No. PT90021
Columbus, Mississippi Facility

We have reviewed the application which you have submitted for the above referenced facility. Enclosed please find a draft modification of the pretreatment permit which we intend to finalize shortly. If you have any comments regarding the modification, please inform us in writing, prior to December 19, 1984.

Sincerely,

Wm. Stephen Spengler, P. E.
Industrial Wastewater Control Section

WSS:cm
Enclosure
cc: Mr. John Herrmann, BPC

Copy

KERR-McGEE CHEMICAL CORPORATION
KERR-McGEE CENTER • OKLAHOMA CITY, OKLAHOMA 73125

RECEIVED
1984 NOV -1 AM 8:57
MISSISSIPPI DEPARTMENT
OF NATURAL RESOURCES
BUREAU OF POLLUTION
CONTROL

October 29, 1984

CERTIFIED MAIL
RETURN RECEIPT REQUESTED

Mr. Wm. Stephen Spengler, P.E.
Industrial Wastewater Control Section
Bureau of Pollution Control
Department of Natural Resources
P. O. Box 10385
Jackson, MS 39209

Re: Kerr-McGee Chemical Corporation
Forest Products Division
Columbus, Mississippi Facility

Dear Mr. Spengler:

Enclosed is the Application for a State Operating Permit for the proposed upgrade of the wastewater treatment system at our Columbus facility. The upgraded system must be completed and in operation under MBPC permit before the impoundments can be closed.

As we have discussed, the upgraded system will handle and treat the wastewater for removal of solids and organic constituents. It is anticipated the treated wastewater discharged will not adversely affect the local POTW.

Should you have any questions, or would like to meet and discuss these plans, please call me.

Very truly yours,

KERR-MCGEE CHEMICAL CORPORATION
FOREST PRODUCTS DIVISION

P. C. Gaskin
Environmental and Quality Control

PCG:kr
Enclosure

FOREST PRODUCTS

cc: Mr. B. W. Boisseau, Plant Superintendent
Kerr-McGee Chemical Corporation
Forest Products Division
P. O. Box 906
Columbus, MS 39701

Mr. John Herrmann
Division of Solid Waste
Bureau of Pollution Control
Mississippi Department of
Pollution Control
P. O. Box 10385
Jackson, MS 39209

Mr. Samuel L. Jaynes, P.E.
Continental Engineering Service
of Mississippi, Inc.
P. O. Box 752
Aberdeen, MS 39730

Forwarded

FILE COPY

October 3, 1984

Mr. P. C. Gaskin
Environmental and Quality Control
Kerr-McGee Chemical Corporation
Kerr-McGee Center
Oklahoma City, Oklahoma 73125

Dear Mr. Gaskin:

Re: Kerr-McGee Corporation
Columbus, Mississippi

We have reviewed the preliminary report which you submitted for the proposed pretreatment facility at your Columbus Plant. The report estimates the flow at the facility to range from 7,500 gpd to 15,000 gpd. We request that a detailed flow breakdown of the sources which comprise this amount be submitted to our office along with the anticipated characteristics of each source. As discussed with you, the proposed treatment actually represents a lower degree of treatment than presently exists. Specifically, we are concerned with the high level of phenolics which are estimated to be in this discharge. Once we receive the requested information we will be in a better position to determine if this discharge will be acceptable for discharge into the Columbus POTW.

If you have any questions concerning this matter do not hesitate to contact me at 601-961-5171.

Sincerely,

Wm. Stephen Spengler, P.E.
Industrial Wastewater Control Section

WSS:cl
cc: Mr. John Herrmann, BPC

KERR-McGEE CHEMICAL CORPORATION
KERR-McGEE CENTER • OKLAHOMA CITY, OKLAHOMA 73125

RECEIVED
1984 AUG -6 AM 9:28
MISSISSIPPI DEPARTMENT
OF NATURAL RESOURCES
BUREAU OF POLLUTION
CONTROL

August 1, 1984

CERTIFIED MAIL
RETURN RECEIPT REQUESTED

Director
Mississippi Department of
Natural Resources
Bureau of Pollution Control
P. O. Box 10385
Jackson, MS 39209

Re: Kerr-McGee Chemical Corporation
Forest Products Division
Columbus, MS Facility
Permit No. 90021
NPDES Discharge Monitoring Report

Dear Sir:

Enclosed is the referenced report for the monitoring periods May 1, 1984 through June 1, 1984, and June 1, 1984 through July 1, 1984.

Respectfully,

KERR-MCGEE CHEMICAL CORPORATION
FOREST PRODUCTS DIVISION

P. C. Gaskin
Environmental and Quality Control

PCG:kr
enclosures

cc: B. W. Boisseau
E. T. Still

FOREST PRODUCTS

KERR-McGEE CHEMICAL CORPORATION
KERR-McGEE CENTER • OKLAHOMA CITY, OKLAHOMA 73125

RECEIVED
1984 MAY 17 AM 9:35
MISSISSIPPI DEPARTMENT
OF NATURAL RESOURCES
BUREAU OF POLLUTION
CONTROL

May 14, 1984

Mr. Wm. Stephen Spengler, Professional Engineer
Mississippi Department of Natural Resources
Industrial Wastewater Control Section
Bureau of Pollution Control
P. O. Box 10385
Jackson, MS 39209

Dear Mr. Spengler:

Re: Kerr-McGee Chemical Corporation
Columbus Facility
Discharge Permit No. PT90021

Reference discharge permit No. PT90021 for the Columbus Facility received on May 7, 1984, monitoring of the discharge commenced May 14, 1984.

As we discussed by phone, we will not be able to submit the first quarterly report due April 28, 1984 because of the late receipt of the permit. You indicated the first report will be due July 28, 1984 for the second quarter. To ensure my understanding is correct, please advise.

Very truly yours,

KERR-McGEE CHEMICAL CORPORATION
FOREST PRODUCTS DIVISION

P. C. GASKIN
Environmental and Quality Control

PCG:rc

Forest Products

AL CORPORATION FOREST PRODUCTS DIVISION
COLUMBUS, MISSISSIPPI
OCESS AND WASTEWATER FLOW DIAGRAM

SEPTEMBER, 1984

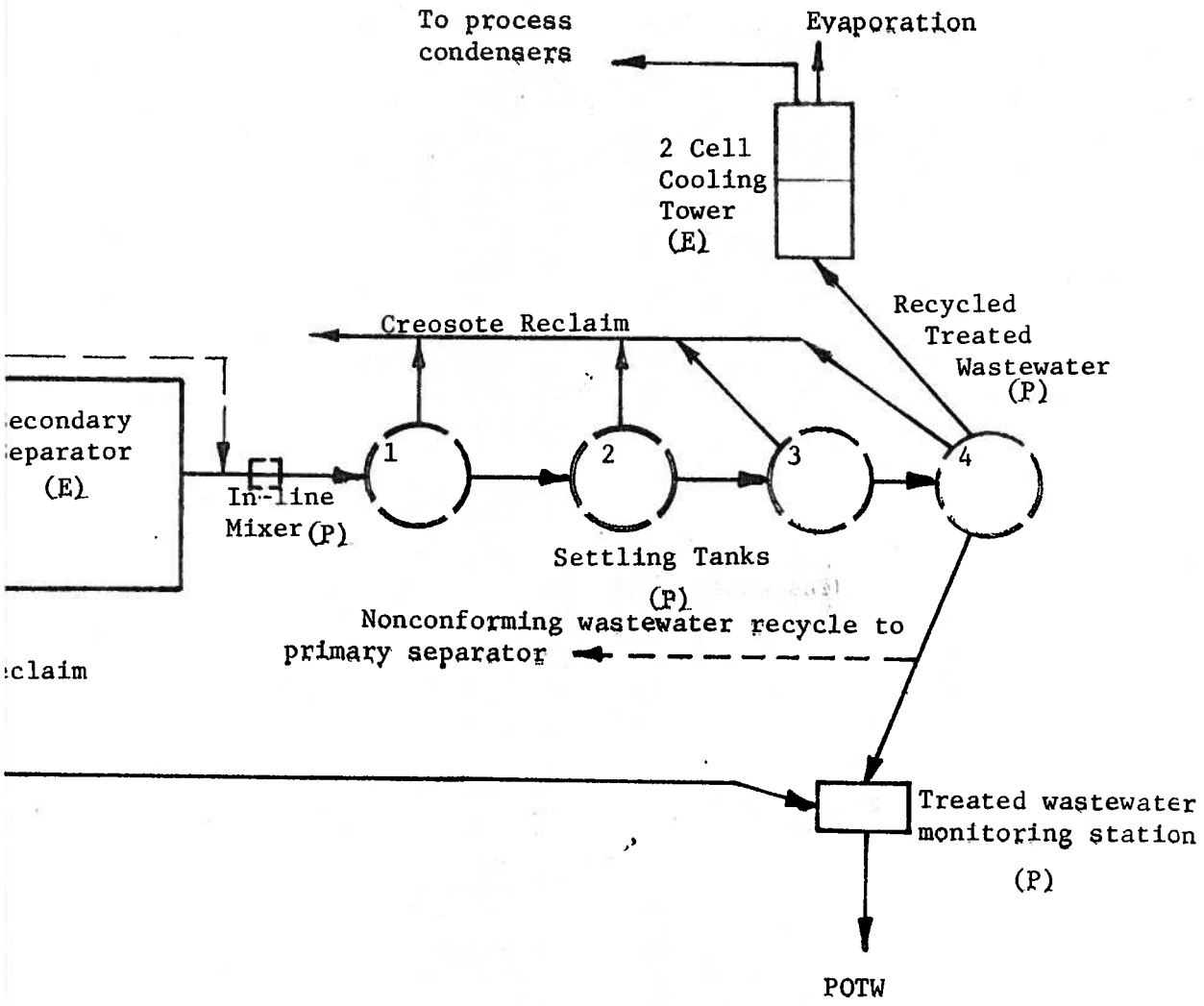

April 26, 1984

FILE COPY

Mr. P. C. Gaskin
Environmental & Quality Control
Kerr-McGee Chemical Corporation
Kerr-McGee Center
Oklahoma City, Oklahoma 73125

Dear Mr. Gaskin:

Re: Pretreatment Permit No. PT90021
Kerr-McGee - Columbus, Mississippi

Enclosed is Pretreatment Permit Number PT90021; which is hereby issued to Kerr-McGee. Please note the effluent limitations, schedule of compliance, monitoringrequirements, and monitoring reporting dates found in this permit.

This permit is issued in accordance with the provisions of the Mississippi Air and Water Pollution Control Law (Sections 49-17-1, et. seq., Mississippi Code of 1972), and the regulations and standards adopted and promulgated thereunder.

Please be advised that this permit does not relieve the permittee from complying with any requirements which the Publicly Owned Treatment Works (POTW) Authority may deem necessary as a prerequisite to the use of the Authority's sewage system and associated treatment works.

If Kerr-McGee desires that a Permit Board hearing be held regarding this permit, it should make written application to the Board within thirty (30) days after receipt of this notice; otherwise, the terms, conditions and limitations in the permit shall become final.

If you have any questions, please contact us.

Sincerely,

Wm. Stephen Spengler, P. E.
Industrial Wastewater Control Section

WSS:cm
Enclosure
cc: Mr. Reynolds Ridgley, Public Works Director (w/enclosure)
Mr. Paul Zetterholm (w/enclosure)

ORIGINAL

KERR-McGEE CHEMICAL CORPORATION
KERR-McGEE CENTER • OKLAHOMA CITY, OKLAHOMA 73125

RECEIVED
MISSISSIPPI DEPARTMENT OF NATURAL RESOURCES
BUREAU OF POLLUTION CONTROL

October 29, 1984

CERTIFIED MAIL
RETURN RECEIPT REQUESTED

Mr. Wm. Stephen Spengler, P.E.
Industrial Wastewater Control Section
Bureau of Pollution Control
Department of Natural Resources
P. O. Box 10385
Jackson, MS 39209

Re: Kerr-McGee Chemical Corporation
Forest Products Division
Columbus, Mississippi Facility

Dear Mr. Spengler:

Enclosed is the Application for a State Operating Permit for the proposed upgrade of the wastewater treatment system at our Columbus facility. The upgraded system must be completed and in operation under MBPC permit before the impoundments can be closed.

As we have discussed, the upgraded system will handle and treat the wastewater for removal of solids and organic constituents. It is anticipated the treated wastewater discharged will not adversely affect the local POTW.

Should you have any questions, or would like to meet and discuss these plans, please call me.

Very truly yours,

KERR-MCGEE CHEMICAL CORPORATION
FOREST PRODUCTS DIVISION

P. C. Gaskin
Environmental and Quality Control

PCG:kr
Enclosure

FOREST PRODUCTS

cc: Mr. B. W. Boisseau, Plant Superintendent
Kerr-McGee Chemical Corporation
Forest Products Division
P. O. Box 906
Columbus, MS 39701

Mr. John Herrmann
Division of Solid Waste
Bureau of Pollution Control
Mississippi Department of
Pollution Control
P. O. Box 10385
Jackson, MS 39209

Mr. Samuel L. Jaynes, P.E.
Continental Engineering Service
of Mississippi, Inc.
P. O. Box 752
Aberdeen, MS 39730

55

KERR-McGEE CHEMICAL CORPORATION
KERR-McGEE CENTER • OKLAHOMA CITY, OKLAHOMA 73125

RECEIVED
1984 OCT 26 AM 9:06
MISSISSIPPI DEPARTMENT
OF NATURAL RESOURCES
BUREAU OF POLLUTION
CONTROL

October 19, 1984

CERTIFIED MAIL
RETURN RECEIPT REQUESTED

Director
Mississippi Department of
Natural Resources
Bureau of Pollution Control
P. O. Box 10385
Jackson, MS 39209

Re: Kerr-McGee Chemical Corporation
Forest Products Division
Columbus, MS Facility
Permit No. 90021
NPDES Discharge Monitoring Report

Dear Sir:

Enclosed are the reference reports for the monitoring periods July 1, through August 1, 1984; August 1, through September 1, 1984; and September 1, through October 1, 1984.

Respectfully,

KERR-McGEE CHEMICAL CORPORATION
FOREST PRODUCTS DIVISION

P. C. GASKIN
Environmental and Quality Control

PCG:rc
enc.

cc: W. J. Broussard - no attachments
B. W. Boisseau - with attachments
J. H. Bull - with attachments

FOREST PRODUCTS

Lowndes

FILE COPY

February 14, 1984

Mr. P. C. Gaskin
Environmental & Quality Control
Kerr-McGee Chemical Corporation
Kerr-McGee Center
Oklahoma City, Oklahoma 73125

Dear Mr. Gaskin:

Re: Draft Pretreatment Permit
Kerr-McGee
Columbus, Mississippi

Enclosed please find a draft pretreatment permit for the above referenced facility. This permit contains conditions which we intend to incorporate as part of your final permit.

Please note the effluent limitations, schedule of compliance, monitoring requirements, and monitoring reporting dates found in this permit.

If you have any comments concerning the information transmitted herewith, please notify this office in writing by February 24, 1984.

Sincerely,

Wm. Stephen Spengler, P. E.
Industrial Wastewater Control Section

WSS:hdb
Enclosure
cc: Mr. Reynolds Ridgley, Public Works Director (w/enclosures)

Spengler

MISSISSIPPI STATE UNIVERSITY

FOREST PRODUCTS UTILIZATION LABORATORY
P. O. DRAWER FP
MISSISSIPPI STATE, MISSISSIPPI 39762
PHONE (601) 325-2116

February 8, 1984

Mr. Peter Gaskin
Kerr McGee Corp.
P. O. Box 25861
Oklahoma City, OK 73125

Dear Mr. Gaskin:

Enclosed is the results of the wastewater samples, as you have suggested on January 20, 1984.

If you have any questions, please let me know.

With the best regards.

Sincerely,

Susmita Parikh.

Susie Parikh
Research Assistant

SP/jr

RECEIVED
FEB 13 1984

Spengler

KERR-McGEE CHEMICAL CORPORATION
KERR-McGEE CENTER • OKLAHOMA CITY, OKLAHOMA 73125

RECEIVED
FEB 6 REC'D
DEPT OF NATURAL RESOURCE
BUREAU OF POLLUTION CONTROL

February 2, 1984

Mr. Stephen Spengler, P. E.
Industrial Wastewater Control Section
Bureau of Pollution Control
Mississippi Department of Natural Resources
P. O. Box 10385
Jackson, MS 39209

Dear Mr. Spengler:

Enclosed is the partially completed pretreatment application form for our Columbus facility. As I indicated to you during our visit in your office on January 17, 1984, we would send the information we had for the application and would follow up with a supplemental report with analytical data by March 11, 1984.

Please call me at (405) 270-2395 if there are any questions.

Very truly yours,

KERR-McGEE CHEMICAL CORPORATION
FOREST PRODUCTS DIVISION

P. C. GASKIN
Environmental and Quality Control

PCG:rc
enc.

cc: B. W. Boisseau
W. J. Broussard
N. Renfro

Lowndes

FILE COPY

January 4, 1984

Mr. G. D. Lowe, Plant Manager
Kerr-McGee Chemical Corporation
P. O. Box 906
Columbus, Mississippi 39701

Dear Mr. Lowe:

Re: Request to Complete Pretreatment
Application Forms

As you are probably aware the compliance date for the federal pretreatment regulations for the Timber Products Industry is March 11, 1984. By this date we anticipate issuing pretreatment permits to all facilities covered under these regulations. In order that we can expedite this process we request that you complete the enclosed application and submit to this office by February 6, 1984.

If you have any questions concerning the completion of this form do not hesitate to contact me at 961-5171.

Sincerely,

Wm. Stephen Spengler, P.E.
Industrial Wastewater Control Section

WSS:cl
Enclosure

KERR-McGEE

COLUMBUS, MISSISSIPPI PT 90024

CONTACT: ~~H.L. DEARMAN~~ PETE CREEKMORE PHONE: 328-7551

PERSON TO MEET @ FACILITY: DON GETZ

DIRECTIONS: TAKE 82 THRU COLUMBUS

TURN LEFT @ HWAY 50 - HWAY 82 INTERSECTION
GO UNTIL YOU REACH A DEAD END
(TAKE A LEFT @ THAT 3-WAY STOP)

GO ABOUT TWO (2) MILES UNTIL YOU SEE A TRAFFIC LIGHT (TAKE A RIGHT)

GO ABOUT THREE (3) BLOCKS
(CROSS-TIES & FACILITY WILL BE ON THE LEFT)

MISSISSIPPI DEPARTMENT OF NATURAL RESOURCES
Bureau of Pollution Control
P. O. Box 10385
Jackson, Mississippi 39209
(601) 961-5171

MEMORANDUM

TO: Kerr-McGee - Columbus File

FROM: Jerry W. Cain JWC

SUBJECT: CEI (September 8, 1983)

DATE: October 4, 1983

A CEI was performed at the above referenced facility on September 8, 1983. The Plant Manager, Bob Boysaw (SIC), represented the facility. A visual inspection was made of the following areas:

1. Process Area
2. Product Storage Area
3. Pretreatment Facilities
4. Rainfall Runoff Ditches Surrounding the Plant

No significant problems were observed.

JWC:els

KERR-McGEE CHEMICAL CORPORATION
P.O. BOX 906 • COLUMBUS, MISSISSIPPI 39703-0906

RECEIVED
JAN - 8 1993
DEQ-OPC

January 7, 1993

Mississippi Department of Natural Resources
Bureau of Pollution Control
P. O. Box 10385
Jackson, MS 39209

Attention: Nameh Salem

Dear Mr. Salem:

Attached, please find the Discharge Monitoring Report for the month of December, 1992.

Sincerely,

John J. Getz
Plant Manager

JJG:tjj

cc: J. H. Bull

May 11, 1982

FILE COPY

Mr. G. D. Lowe, Plant Manager
Kerr-McGee Chemical Corporation
14th Avenue and 20th Street, North
P. O. Box 906
Columbus, Mississippi 39701

Dear Mr. Lowe:

Re: Inspection on April 27, 1982
Kerr McGee - Columbus, Mississippi

I appreciate the time which you and Mr. Hoffman spent with me on my recent inspection at your facility. There were no problems seen during my inspection. However, the Bureau requests that you keep us abreast of the upgrading of the pretreatment facilities as well as the modifications being made to the spill control and contingency plan at your facility.

If I can be of any assistance, do not hesitate to contact me at 961-5074.

Sincerely,

Steve Spengler
Industrial Wastewater Control Section

SS:cm
cc: Mr. P. C. Gaskin

MISSISSIPPI DEPARTMENT OF NATURAL RESOURCES
Bureau of Pollution Control
P. O. Box 10385
Jackson, Mississippi 39209
(601) 961-5171

MEMORANDUM

TO: Kerr McGee Wood Preserving File (Columbus, Mississippi)

FROM: Steve Spengler SS

SUBJECT: Kerr McGee Inspection on April 27, 1982

DATE: April 29, 1982

On April 27, 1982, I met with Mr. Lowe and Mr. Hoffman of Kerr McGee and inspected their facility. This facility treats ties and poles with creosote. The treatment system consists of two API separators followed by a small aerated lagoon and then a polishing pond before discharging into the POTW. The company is in the process of finalizing the development of an updated SPCC plan. Two storage tanks are yet to be diked. The company is also planning to add a flocculation system after primary separation to recover more useable oils. A sloping diked loading pad has recently been installed. This pad will contain any spill which a truck might have when unloading creosote. There were no problems observed at this facility.

SS:cm
cc: Jerry Cain

T/E
Lowndes
Co

KERR-McGEE CHEMICAL CORPORATION
KERR-McGEE CENTER • OKLAHOMA CITY, OKLAHOMA 73125

RECEIVED
FEB - 1 REC'D

January 26, 1982

DEPT OF NATURAL RESOURCE
BUREAU OF POLLUTION CONTROL

Mr. Steve Spangler
Bureau of Pollution Control
Mississippi Department of Natural Resources
P.O. Box 10385
Jackson, MS 39209

Dear Mr. Spangler:

Attached is information available at this time pertaining to the baseline report you requested for the Kerr-McGee Chemical Corporation plant located in Columbus.

Additional pretreatment facilities are currently being constructed and should be in operation by May 1982. We have already begun to conduct the required monitoring as stipulated in item 5 of the baseline report outline, and will submit the data when completed.

Please contact me at (405) 270-2395 if you have any questions.

Sincerely,

P. C. Gaskin
Environmental & Quality Control
Forest Products Division

PCG/lbm

cc: W. J. Broussard
G. D. Lowe
Kay Brothers

KERR-McGEE CHEMICAL CORPORATION
KERR-McGEE CENTER • OKLAHOMA CITY, OKLAHOMA 73125

July 6, 1981

Mississippi Department of Natural Resources
P. O. Box 10385
Jackson, MS 39209

Attention: Mr. Walter Huff

Dear Mr. Huff:

Your letter to Mr. G. D. Lowe, Plant Superintendent, Kerr-McGee Chemical Corporation, Columbus, Mississippi, dated 6/23/81, has been forwarded to me for response.

The permit application attached to your letter is for the operation of a wastewater disposal system with no discharge. The Columbus plant utilizes secondary pretreatment and currently discharges to the POTW. For this reason we believe the permit application does not apply.

If you have any questions, please contact me.

Sincerely,

KERR-MCGEE CHEMICAL CORPORATION
FOREST PRODUCTS DIVISION

P. C. Gaskin
Environmental and Quality Control

bkr

cc: G. D. Lowe
Kay Brothers

RECEIVED
JUL 16 1981
DEPT OF NATURAL RESOURCE
BUREAU OF POLLUTION CONTROL

State of Mississippi
Water Pollution Control
PERMIT

TO OPERATE A WASTE DISPOSAL SYSTEM IN ACCORDANCE

WITH NATIONAL AND STATE PRETREATMENT STANDARDS

THIS CERTIFIES THAT

KERR-MCGEE CHEMICAL CORPORATION
FOREST PRODUCTS DIVISION
COLUMBUS, MISSISSIPPI

has been granted permission to discharge wastewater into

Columbus POTW

in accordance with effluent limitations, monitoring requirements and other conditions set forth in this permit. This permit is issued in accordance with the provisions of the Mississippi Water Pollution Control Law (Section 49-17-1 et seq., Mississippi Code of 1972), and the regulations and standards adopted and promulgated thereunder, and under authority granted pursuant to Section 402(b) of the Federal Water Pollution Control Act.

The issuance of this permit does not relieve the permittee from complying with any requirements which the Publicly Owned Treatment Works (POTW) Authority may deem necessary as a prerequisite to the use of the Authority's sewage system and associated treatment works.

MISSISSIPPI NATURAL RESOURCES PERMIT BOARD

Original Signed By
CHARLES H. CHISOLM

DIRECTOR, BUREAU OF POLLUTION CONTROL
MISSISSIPPI DEPARTMENT OF NATURAL RESOURCES

Issued: May 23, 1989

Expires: May 22, 1994

Permit No. PT90021

A. EFFLUENT LIMITATIONS AND MONITORING REQUIREMENTS

1. During the period beginning May 23, 1989, and lasting until May 22, 1994, the permittee is authorized to discharge from outfall(s) serial number(s) 001: (Pretreated Process Wastewater and Boiler Blowdown).

Such discharges shall be limited and monitored by the permittee as specified below:

PARAMETER	DISCHARGE LIMITATIONS				MONITORING REQUIREMENTS	
	kg/day (lbs/day)		Other Units (Specify)		Measurement	Sample
	Daily Avg.	Daily Max.	Daily Avg.	Daily Max.	Frequency	Type
Flow-M^3/day (MGD)	--	--	--	--	Once/Day	Continuous
Oil and Grease	--	--	50 mg/l	100 mg/l	Twice/Week	Grab
Total Phenols	--	22.2(48.8)	--	--	Once/Week	Grab

2. The pH shall not be less than 5.0 standard units and shall be monitored twice per week with a grab sample of the effluent.

3. Samples taken in compliance with the monitoring requirements specified above shall be taken at the following location(s): at the nearest accessible point after final treatment but prior to actual discharge into the POTW collection system.

B. SCHEDULE OF COMPLIANCE

1. The permittee shall achieve compliance with the effluent limitations specified for discharge in accordance with the following schedule:

   The permittee shall achieve compliance with the effluent limitations contained herein upon permit issuance.

2. No later than 10 calendar days following a date identified in the above schedule of compliance, the permittee shall submit either a report of progress or, in the case of specific actions being required by identified dates, a written notice of compliance or noncompliance. In the latter case, the notice shall include the cause of noncompliance, any remedial actions taken, and the probability of meeting the next scheduled requirement.

C. GENERAL PRETREATMENT PROHIBITIONS

1. In addition to those pollutants limited in Part I.A., the following pollutants shall not be discharged into the POTW:

   (a) Pollutants which create a fire or explosion hazard in the POTW;

   (b) Pollutants which will cause corrosive structural damage to the POTW, but in no case discharges with pH lower than 5.0, unless the treatment works is specifically designed to accommodate such discharges;

   (c) Solid or viscous pollutants in amounts which will cause obstruction to the flow in the POTW resulting in interference;

   (d) Any pollutant, including oxygen demanding pollutants (BOD, etc.) released in a discharge at a flow rate and/or pollutant concentration which will cause interference with the POTW; or,

   (e) Heat in amounts which will inhibit biological activity in the POTW resulting in interference, but in no case heat in such quantities that the temperature at the POTW treatment plant exceeds 40°C (104°F) unless the approval Authority, upon request of the POTW, approves alternate limits.

D. ORAL NOTIFICATION REQUIREMENTS

The permittee shall notify the Mississippi Natural Resources Permit Board and the POTW orally immediately upon becoming aware of the following:

1. A spill which would result in a discharge to the POTW;

2. Any diversion or bypass of the wastewater treatment system which would result in a discharge to the POTW; or,

3. Any system upset which would cause the facility to be in noncompliance with the limitations found in Part I.A. or I.C. of this permit.

E. OTHER SPECIFIC PRETREATMENT REQUIREMENTS

1. The discharge from this facility must be bled into the POTW collection system on a daily basis at a continuous rate over a 24-hour period.

2. If at any time the discharge from this facility interferes with the operation of the Columbus Wastewater Treatment Plant or causes violation of water quality standards in the Luxapallila Creek, the facility must discontinue this discharge.

PART II

A. MANAGEMENT REQUIREMENTS AND RESPONSIBILITIES

1. No Discharge of Wastewater to Surface Water

The discharge of any wastewater from this facility to the waters of the State of Mississippi shall constitute a violation of this permit, except as provided in Section A.4 of this permit, or as authorized under separate permit pursuant to Section 402 of the Federal Water Pollution Control Act.

2. Change in Wastewater Source

Any anticipated facility expansions, production increases, or process modifications which will result in new, different or increased wastewater flows, must be reported to the Mississippi Natural Resources Permit Board. Following such notice, if the Permit Board determines that such change will violate any condition of this permit, it may require the submittal of a new application or it may modify this permit accordingly.

3. Facilities Operation

The permit shall at all times maintain in good working order and operate as efficiently as possible all treatment or control facilities or systems installed or used by the permittee to achieve compliance with the terms and conditions of this permit.

4. Bypassing

Any diversion from or bypass of wastewater collection and treatment or control facilities is prohibited, except (i) where unavoidable to prevent loss of life or severe property damage, or (ii) where excessive storm drainage or runoff would damage any facilities necessary for compliance with the effluent limitations and prohibitions of this permit. The permittee shall notify the Mississippi Natural Resources Permit Board in writing of each such diversion or bypass in advance where practicable but in any case, within 72 hours of the diversion or bypass, and shall submit to the Permit Board a plan to prevent recurrence of the diversion or bypass within thirty (30) days of the incident.

5. Removed Substances

Solids, sludges, filter backwash, or other residuals removed in the course of treatment or control of wastewaters shall be disposed of in a manner such as to prevent such materials from entering State waters and in a manner consistent with the Mississippi Solid Waste Disposal Act and the Federal Resource Conservation and Recovery Act.

6. Power Failures

In order to maintain compliance with the conditions and prohibitions of this permit, the permittee shall either:

(a) Provide an alternative power source to operate the wastewater control facilities;

or, if such alternative power source is not in existence, and no date for its implementation appears in this permit,

(b) Halt, reduce, or otherwise control production and/or all wastewater flows upon reduction, loss, or failure of the primary source of power to the wastewater control facilities.

B. MONITORING, REPORTING, AND RECORDKEEPING

1. Routine Reporting

Such test results, reports, or other data as the Mississippi Natural Resources Permit Board may determine to be necessary shall be submitted on a regular basis to the following address:

MISSISSIPPI DEPARTMENT OF NATURAL RESOURCES
BUREAU OF POLLUTION CONTROL
P. O. Box 10385
Jackson, Mississippi 39209

2. Test Procedures

Test procedures for the analysis of pollutants shall conform to regulations published pursuant to Section 304(h) of the Federal Water Pollution Control Act, as amended.

3. Representative Sampling

Samples and measurements taken as required herein shall be representative of the volume and nature of the monitored wastewater.

4. Recording of Results

(a) The exact place, date, and time of sampling;
(b) The dates the analyses were performed;
(c) The person(s) who performed the analyses;
(d) The analytical techniques or methods used; and
(e) The results of all required analyses.

5. Records Retention

(a) All records and information resulting from the monitoring activities required by this permit (including all records of analyses performed; calibration and maintenance of instrumentation; and recordings from continuous monitoring instrumentation) shall be retained for a minimum of three (3) years, or longer if requested by the Permit Board.

(b) The permittee shall furnish to the Permit Board, upon request, copies of records required to be kept by this permit.

6. Noncompliance Reporting

This permittee shall report any instances of noncompliance orally to the Director, or his representative, within 24 hours of becoming aware of the circumstances. A written report shall also be provided within five (5) days of such time, and shall contain the following information:

(a) A description of the noncompliance and its cause, if known.

(b) The period of noncompliance, including exact dates and times; or if not corrected, the anticipated time the noncompliance is expected to continue, and steps taken to reduce, eliminate, and prevent recurrence.

7. Right of Entry

The permittee shall allow the Mississippi Natural Resources Permit Board and/or their authorized representatives, upon the presentation of credentials:

(a) To enter upon the permittee's premises where a wastewater source is located or in which records are required to be kept under the terms and conditions of this permit; and

(b) At reasonable times to have access to and copy any records required to be kept under the terms and conditions of this permit; to inspect any monitoring equipment or monitoring method required in this permit; and to sample any wastewater generated at this facility.

8. Transfer of Ownership or Control

This permit is not transferable to any person except after proper notice. In the event of any change in control or ownership of facilities, the permittee shall notify the Mississippi Natural Resources Permit Board at least thirty (30) days in advance of the proposed transfer date. The notice should include a written agreement between the existing and new permittees containing a specific date for the transfer of permit responsibility, coverage, and liability.

9. Availability of Records

Except for data determined to be confidential under the Mississippi Air and Water Pollution Control Law, all reports prepared in accordance with the terms of this permit shall be available for public inspection at the offices of the Mississippi Bureau of Pollution Control.

10. Permit Modification

(a) The permittee shall furnish to the Permit Board within a reasonable time any relevant information which the Permit Board may request to determine whether cause exists for modifying, revoking and reissuing, or terminating the permit, or to determine compliance with the permit.

(b) Upon sufficient cause this permit may be modified, revoked, reissued, or terminated during its term.

(c) The filing of a request by the permittee for a permit modification, or a notification of planned changes or anticipated noncompliance, does not stay any permit condition.

11. Property Rights

The issuance of this permit does not convey any property rights in either real or personal property, or any exclusive privileges, nor does it authorize any injury to private property or any invasion of personal rights, nor any infringement of Federal, State, or local laws or regulations.

12. Oil and Hazardous Substance Liability

Nothing in this permit shall be construed to preclude the institution of any legal action or relieve the permittee from any responsibilities, liabilities, or penalties to which the permittee is or may be subject to under Section 311 of the Federal Water Pollution Control Act or the applicable provisions under Mississippi Law pertaining to the transportation, storage, treatment, or spillage of oil or hazardous substances.

13. Severability

The provisions of this permit are severable, and if any provision of this permit, or the application of any provision of this permit to any circumstances, is held invalid, the application of such provision to other circumstances, and the remainder of this permit shall not be affected thereby.

14. Closure Requirements

Should the permittee decide to permanently close and abandon the premises upon which it operates, it shall so notify the Permit Board no later than 90 days prior to doing so. Accompanying this notification shall be a closure plan which describes how and when all manufactured products, byproducts, raw materials, stored chemicals, and solid and liquid wastes will be removed from the premises such that they will present no potential environmental hazard to the area. Abandonment of the site without providing proper notification as required herein, or without completing all aspects of the closure plan, will constitute a violation of this permit and may result in penalties of up to $25,000.

15. Submittal of Discharge Monitoring Results

Monitoring results obtained during the month shall be summarized and reported on a Discharge Monitoring Report Form (EPA No. 3320-1), postmarked no later than the 28th day of the following month. The first report is due on June 28, 1989. Copies of this, and any other reports required herein, shall be signed in accordance with Sections 6 and 7 of the Mississippi Wastewater Permit Regulations, and shall be submitted to the Mississippi Natural Resources Permit Board at the following address:

MISSISSIPPI DEPARTMENT OF NATURAL RESOURCES
BUREAU OF POLLUTION CONTROL
P. O. Box 10385
Jackson, Mississippi 39209

16. Definitions

(a) The "daily average" is the arithmetic mean of all samples collected in a one-month period.

(b) The "daily maximum" is the highest value recorded of any sample collected on any single day of the calendar month.

RECEIVED
1984 SEP 10 AM 9:25
MISSISSIPPI DEPARTMENT
OF NATURAL RESOURCES
BUREAU OF POLLUTION
CONTROL

KERR-McGEE CHEMICAL CORPORATION
KERR-McGEE CENTER • OKLAHOMA CITY, OKLAHOMA 73125

September 10, 1984

CERTIFIED - RETURN RECEIPT REQUESTED

Mr. Wm. Stephen Spengler, P.E.
Industrial Wastewater Control Section
Bureau of Pollution Control
Department of Natural Resources
P. O. Box 10385
Jackson, MS 39209

Dear Mr. Spengler:

Re: Kerr-McGee Chemical Corporation
Forest Products Division
Columbus, MS Facility

In the Closure Plan submitted to Mr. John Herrmann in April, 1984, Kerr-McGee Chemical Corporation committed to upgrading the existing wastewater treatment system prior to closure of the existing surface impoundments. The upgraded treatment system will pretreat the facility's wastewater before discharing it to the Columbus POTW. The treated wastewater will comply with all requirements of the Columbus POTW. The new system must be completed and in operation under MBPC permit before the impoundments can be closed.

Enclosed are the preliminary plans and specifications for the wastewater treatment system for your review and comment. A copy of this information has been sent to the POTW authorities. Kerr-McGee will submit by October 15, 1985, final plans, drawings, specifications and a completion schedule to the MBPC for approval. Please submit your comments to my office by September 30, 1984.

FOREST PRODUCT

Should you have any questions, or would like to meet and discuss these plans, please call me.

Very truly yours,

KERR-McGEE CHEMICAL CORPORATION
FOREST PRODUCTS DIVISION

P. C. GASKIN
Environmental and Quality Control

PCG:rc
enc.

cc: Mr. B. W. Boisseau, Plant Superintendent
Kerr-McGee Chemical Corporation
Forest Products Division
P. O. Box 906
Columbus, MS 39701

Mr. John Herrmann
Division of Solid Waste
Bureau of Pollution Control
Mississippi Dept. of Pollution Control
P. O. Box 10385
Jackson, MS 39209

Mr. Samuel L. Jaynes, P. E.
Continental Engineering Service of Mississippi, Inc.
P. O. Box 752
Aberdeen, MS 39730

Preliminary

KERR McGEE CHEMICAL CORPORATION

FOREST PRODUCTS DIVISION

COLUMBUS, MISSISSIPPI FACILITY

EPA-ID NO. MSD 990866329

Proposed changes in the handling and treatment of process wastewater at the Columbus, Mississippi Plant

Prepared by:
Continental Engineering Service
P. O. Box 752
Aberdeen, Mississippi

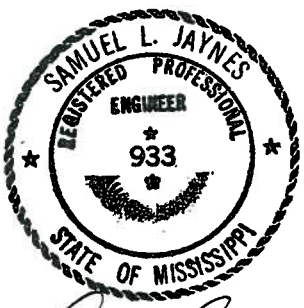

CONTENTS

EXISTING PLANT DESCRIPTION

PROPOSED TREATMENT SYSTEM

WASTEWATER CHARACTERISTICS

WASTEWATER TREATMENT TESTS

KERR-MCGEE CHEMICAL CORPORATION
FOREST PRODUCTS DIVISION
COLUMBUS, MISSISSIPPI FACILITY
EPA-ID NO. MSD 990866329

In April, 1984, Kerr-McGee Chemical Corporation, Forest Products Division, submitted to the Mississippi Bureau of Pollution Control a closure plan for the two surface impoundments at the Columbus, Mississippi Wood Preserving Facility. To facilitate closure, certain changes in the handling and treatment of the process wastewater will have to be completed. The purpose of this report is to present the process design for upgrading the existing system.

EXISTING PLANT DESCRIPTION

The Columbus wood preserving facility was built in 1928 and acquired by Kerr-McGee Corporation in 1964. The main plant consists of approximately 90 acres (figure 1). At the present time, creosote coal tar solution is the only wood preservative used in the plant, although pentachlorophenol was also used until 1976.

Wastewater generated by the wood preserving process is passed through a primary oil/water separator and then split into two streams for parallel passage through a secondary dual-compartment oil/water separator (figure 2). Creosote settles in these vessels where it is recovered and returned to the process for reuse.

From the second stage separator, the waste streams are recombined and discharged to an aeration pond, then to an oxidation pond prior to discharge to the Columbus Publicly Owned Treatment Works (POTW).

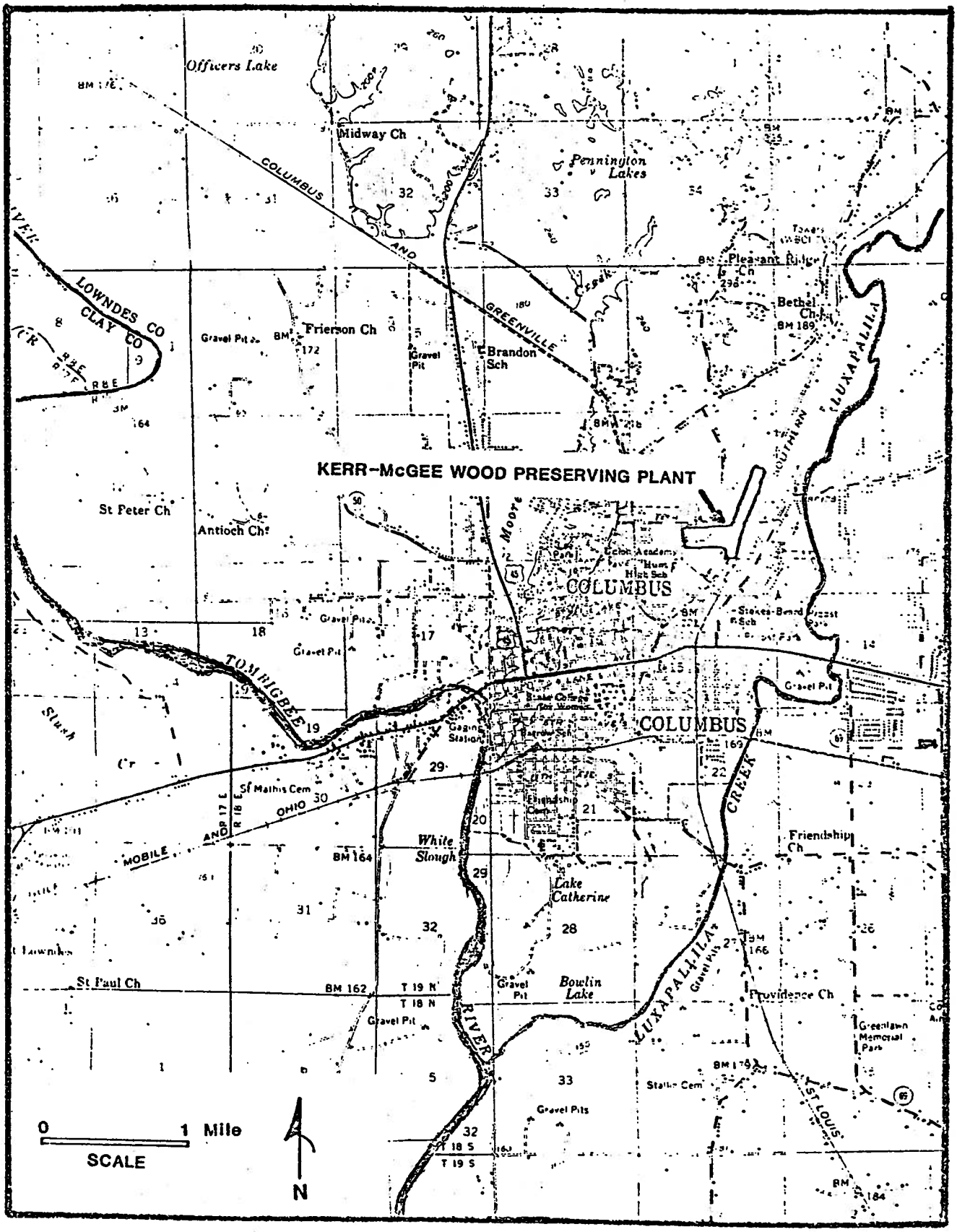

FIGURE 1: KERR-McGEE FACILITY LOCATION

FIG. 2 SCHEMATIC DIAGRAM
KM WOOD PRESERVING PLANT
COLUMBUS, MISSISSIPPI

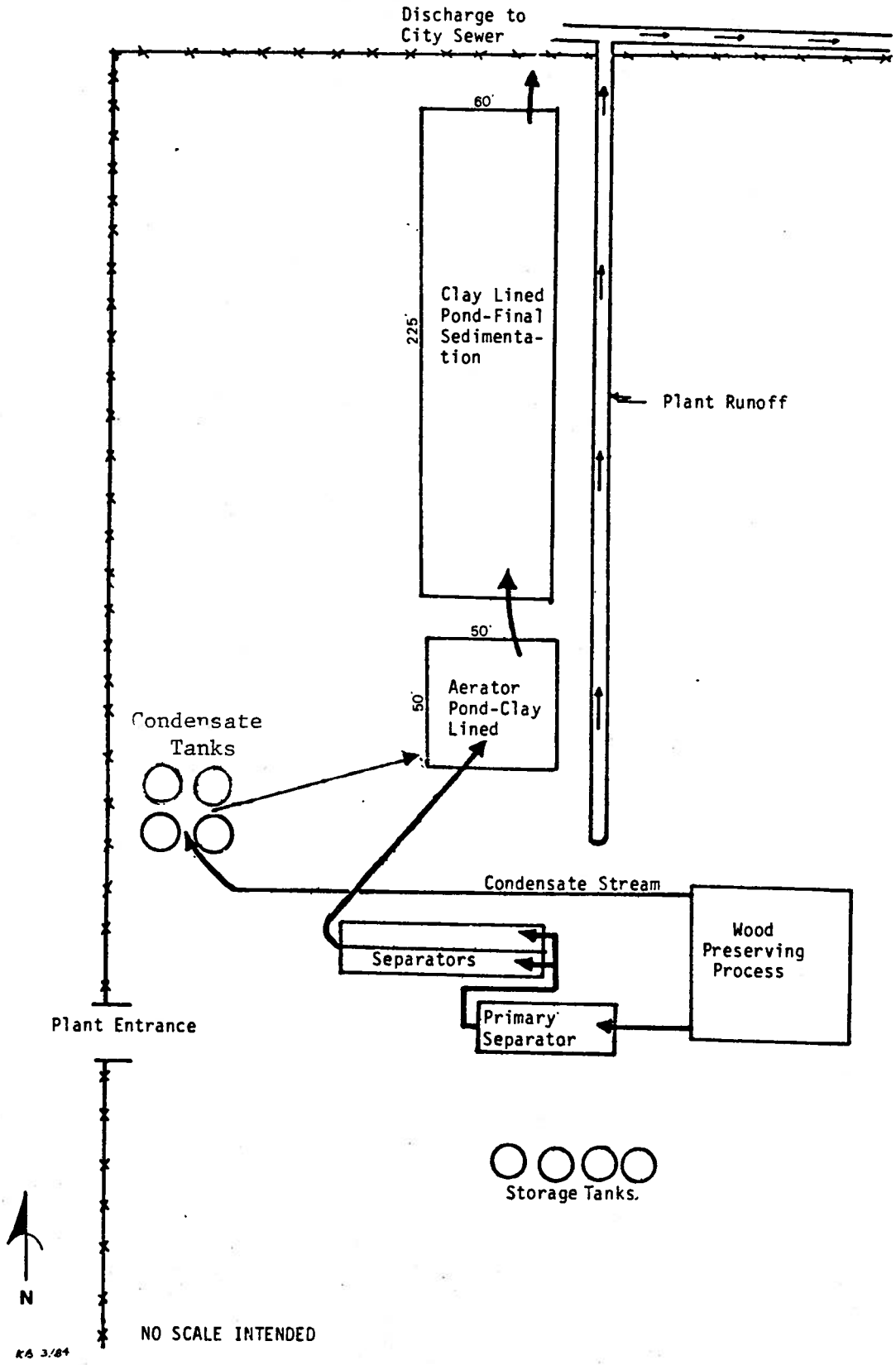

Steam condensate and water that is not contaminated with creosote are discharged into four condensate receiving tanks, then discharged to the aeration pond for commingling and discharge with process wastewater.

PROPOSED TREATMENT SYSTEM

Kerr-McGee is proposing to discontinue the use of the aeration pond and oxidation pond in accordance with State of Mississippi hazardous waste regulations. Before closure of the impoundments can begin, an improved wastewater treatment system will be installed, permitted and operated in accordance with Mississippi Water Pollution Control Law (Section 49-17-1, et seq., Mississippi Code of 1972). The system will pretreat the process wastewater prior to discharging it to the Columbus POTW. The new wastewater treatment system will replace the surface aeration pond and oxidation lagoon.

The proposed upgrading plan includes replacing the treatment effluent in the impoundments with chemical treatment (Attachment). This will be accomplished by adjusting the pH of the effluent from the primary oil/water separator with caustic soda. A chemical feed pump and an in-line static mixer will feed and mix the caustic soda with the wastewater. Downstream of the caustic addition system and just prior to entering the secondary oil/water separators, a polymeric flocculant will be added to the waste stream with appropriate chemical feed pumps and in-line mixers. The effluent from the secondary separators will be pumped to a holding tank with a capacity of approximately 60,000 gallons. From this tank the wastewater stream will be released to the city sewer through a new discharge line at a controlled rate. A pH monitor and sampler will be installed

to monitor the treatment plant's effluent and to insure that the effluent will comply with any requirements the Columbus POTW authority may deem as necessary prerequisites to the use of its sewage system and treatment works.

WASTEWATER CHARACTERISTICS

The wastewater to be treated by the proposed treatment system includes boiler blowdown and all process wastewaters generated by the production process. Steam condensate will be recirculated to the boilers as boiler feed water.

Recent analyses of the wastewater show that the raw wastewater has the following characteristics:

Oil and Grease	-	162.8	mg/l
Phenol	-	208.7	mg/l
Pentachlorophenol	-	1.0	mg/l
BOD_5	-	322	mg/l
pH	-	5.18	

The volume of wastewater generated per day will vary from zero to a maximum of around 15,000 gpd. The plant is currently treating dry stock and the volume of wastewater is only 3,000 to 5,000 gpd. When the plant treats green wood, the flow of wastewater will increase to 10-15,000 gpd.

WASTEWATER TREATMENT TESTS

Kerr-McGee is presently studying proposals for the chemical treatment system. The suppliers under consideration are Drew Chemical and Mogul. Both suppliers have the ability to furnish the polymeric flocculants and the chemical injection and mixing equipment.

Tests recently conducted by the vendors indicate that the treated effluent quality will be as follows:

Oil and Grease	- 40 mg/l
Phenols	-200-270 mg/l
Penta	- 1.0 mg/l
BOD_5	-325-430 mg/l
pH	- 7.0-8.0

Continental Engineering Service
of Mississippi, Inc.
200 CHESTNUT ST.
P.O. Box 752
Aberdeen, Mississippi 39730
(601) 369-8944 — 327-2622

S. JAYNES
President

R. BRYANT
Vice-President

September 8, 1984

City of Columbus
Wastewater Treatment Plant
Pickensville Road
Columbus, Mississippi 39701

ATTENTION: Mr. Pittman, Superintendant
Waste Treatment Plant

RE: Kerr McGee Forest Products
14th Avenue North

Dear Sir:

Reference the meeting that Mr. Boisseau, Columbus Plant Superintendant for Kerr-McGee and myself had with you and Mr. Hood on August 14, 1984. At that time we told you that when we had the results of our bench test on the new treatment process for the wastewater at Kerr McGee, we would furnish you the results. Listed below are the analysis of the wastewater before floculating and settlement, and after same:

Oil and Grease - 162.7 mgl
Phenols - 308.7 mgl
Pentachlorophenol - less than 1.0 mgl
BOD_5 - 322 mgl
Ph - 5.18

After treatment with the polymer the above wastewater was re-analysed and the following results were obtained.

Oil and Grease - 40 mgl
Phenols - 271.5 mgl
Pentachlorophenol - less than 1.0 mgl
BOD_5 - 432 mgl
Ph - 5.38

As you can see the oil and grease content is fairly low and the pentachlorophenol is excellent. The BOD_5 is such that will furnish you no problems whatsoever, and the Ph, while showing 5.38 at this point, was not Ph adjusted, which we plan to do in the final process. Therefore the final waste you receive will have a Ph of somewhere between 7.0 and 8.0. We do not feel that the wastewater of this concentration and volume will cause any problems at the Columbus POTW.

If you agree with our thinking on this, as we explained at the August 14 meeting, we would like to have a letter from you stating that you would receive this waste and do not feel that there will be problems with same. This letter must be had by us to submit to the Department of Natural Resources for approval of the closure plan on the lagoon or holding pond that we are now using.

Your immediate attention to this detail will be appreciated as we are on a very tight schedule for the completion of these changes.

With best regards, I am,

Yours truly,

CONTINENTAL ENGINEERING SERVICE

Samuel L. Jaynes, P.E.

SLJ/ms

cc: Mr. B. W. Boisseau
Mr. Pete Gaskin

PUBLIC NOTICE

Mississippi Natural Resources Permit Board
P. O. Box 10385
Jackson, MS 39209
Telephone No. (601) 961-5171

April 1, 1989

The Kerr-McGee Chemical Corporation, Forest Products Division, Box 906, Columbus, Mississippi 39701, has applied to the Mississippi Natural Resources Permit Board for the reissuance of a Pretreatment Permit to discharge pretreated process wastewater and boiler blowdown into the Columbus POTW. The applicant's operation is in the pressure treatment of wood with standard wood preservatives. One discharge is described in the application.

The environmental impact of this project has been evaluated and the staff of the Permit Board believes that, with proper environmental constraints and limitations on the applicant, this project will operate within all State and Federal environmental laws and standards. Therefore, the staff of the Board has preliminarily decided, based on available information, to recommend to the Board that a permit be issued containing numerous environmental regulatory constraints specifically stated in the draft permit. However, before proceeding further with the staff evaluation, public comments are being solicited. The staff recommendation to the Board, as well as the Board decision, will be made only after a thorough consideration of all public comments.

Persons wishing to comment upon or object to the proposed determinations are invited to submit comments in writing to Mr. Louis Lavallee at the above address, no later than April 30, 1989. All comments received by that date will be considered in the formulation of final determinations regarding the application. A public hearing will be held if the Permit Board finds a significant degree of public interest in the proposed permit.

The Permit Board is limited in the scope of its analysis to environmental impact. Any comments relative to zoning or economic and social impacts are within the jurisdiction of local zoning and planning authorities and should be addressed to them.

Additional details about the application and the proposed determination, a sketch showing the location of the discharge, and a copy of the draft permit are available by writing or calling Mr. Todd S. Edwards at the above address and telephone number. Also, this and other information is available for review and copying during normal business hours at the Southport Center Building located at 2380 Highway 80 West, Jackson, MS.

Please bring the foregoing to the attention of persons whom you know will be interested.

MISSISSIPPI BUREAU OF POLLUTION CONTROL

NPDES PERMIT ADMINISTRATIVE RECORD CHECK LIST

FACILITY KERR-McGEE (COLUMBUS) NPDES NO. MSP090021

TYPE OF PERMIT: NPDES: ☐ STATE: ☐ PRETREATMENT: X

DETERMINED TO BE: EXISTING SOURCE: X NEW SOURCE: ☐ MAJOR: ☐ MINOR: ☐

These documents must be present in the Administrative Record:

DOCUMENT	YES	DATE	INITIALS
1. Application and Supporting Documents	X	10-05-88	TSE
2. Draft Permit	X	02-01-89	TSE
3. Fact Sheet or Statement of Basis & Rationale and related documents	X	- -	TSE
4. Public Notice	X	04-01-89	TSE
5. Proof of Publication N/A	☐	- -	

These documents, if applicable, must be present in the Administrative Record:

DOCUMENT	YES	N/A	DATE
6. Other Documents (correspondence between State, EPA, & Applicant, telephone & meeting memoranda, compliance reports, etc.)	☐	X	

LIST: _____

_____

_____

7. New Source Determination & Comments	☐	X	- -
8. Public Comments Received & State Response	☐	X	- -

These Documents, if applicable, need not be physically present in the Administrative Record if specifically referenced and available in the Jackson Office:

DOCUMENT	YES	N/A	AVAILABLE ELSEWHERE	WHERE?
9. Environmental Assessment EIS and/or related documents	☐	X	☐	
10. Public Hearings - P. N. of Hearing Statements, Tape or Transcript	☐	X	☐	

These remaining documents must be present in the Administrative Record:

DOCUMENT	YES	DATE	INITIALS
11. Proof of Final Permit Board Action	X	05-23-89	TSE
12. Final Permit and Transmittal Letter.	X	06-16-89	TSE
13. Certified Mail-Return Receipt.	☐	- -	
14. PCS computer entry forms	X	05-16-89	TSE

CERTIFICATION: I have examined the referenced Administrative File and find the documents checked "yes" above are present in the file. Based on this examination, I certify that this file meets the Administrative Record Requirements of the current NPDES Regulations.

DATE _____ PERMIT WRITER (RECORD CLERK) _____

In the case of a MAJOR DISCHARGER, the first line supervisor shall concur with the certification.

DATE _____ SUPERVISOR _____

For Agency Use
Application Number

Date Received

10-6-88

STATE OF MISSISSIPPI
BUREAU OF POLLUTION CONTROL
P.O. BOX 10385
JACKSON, MISSISSIPPI 39209

APPLICATION FOR A STATE OPERATING PERMIT

(Please Print or Type)

1. Name of Applicant: Kerr-McGee Chemical Corporation
   Forest Products Division, Columbus Facility
2. Mailing Address of Applicant:
   Number & Street (P.O. Box): P.O. Box 906
   City: Columbus State: MS Zip: 39701
3. Applicant's Authorized Agent:
   Name & Title: E. L. Creekmore
   Number & Street (P.O. Box): P.O. Box 906
   City: Columbus State: MS Zip: 39701
   Telephone Number: (601) 328-7551
4. Facilities Location:
   Number & Street: 14th Avenue and 20th Street North
   City: Columbus County: Lowndes
5. Nature of Business: Wood Preserving
   SIC # 2491
6. Do you Discharge Wastewater to a POTW? X Yes ___ No
   If "Yes" Continue, if "No" go to Item 10.
   Name of POTW Receiving Wastewater: Columbus, Mississippi
   Wastewater Treatment Plant
   Number & Street (P.O. Box): Pickensville Road
   City: Columbus County: Lowndes

7. Discharge Type and Occurrence:

A. Type of Discharge: X Continuous; If Continuous, 0.023 Gallons per Day(MGD)

___Batch

B. Discharge Occurrence: 7 Days per Week

C. Discharge Occurrence: X Jan. X Feb. X Mar. X Apr.
X May X Jun. X Jul. X Aug.
X Sep. X Oct. X Nov. X Dec.

8. If Batch:

A. N/A Thousand Gallons per Discharge

B. N/A Hours per Day

C. N/A Discharge Occurrences per Day

9. Maximum Period of Flow: From October (month) to April (month)

10. Facility Water Use:

Estimate average volume in thousand gallons per day for the following types of water usage at this facility.

Noncontact Cooling: _____

Boiler Feed: _____

Process (Including Contact Cooling): 23,500

Sanitary: 5,700

Other: 2,000

Total: 31,200

11. List All Facility Discharges:

Other water losses (surface water, product consumption, evaporation). Indicate volume in thousand gallons.

Steam evaporation 3,700

Cooling tower evaporation 4,500

Discharge to POTW 23,000

12. Give narrative description of process(es) producting discharge, or in the case of no discharge, that generates wastewater.

See Attachment 1

13. List raw materials used: Wood and creosote

14. Effluent Characteristics:

A. You must provide the results of at least one analysis for every pollutant in this table. Complete one table for each outfall to the city sewer. If your facility does not have a discharge indicate so and disregard.

Parameter		Maximum Daily Value	Maximum 30 Day Value	Long Term Average Value	Semi-Annual Values (ppm)
BOD_5	N/A	---	---	---	Cu - 0.017
COD	N/A	---	---	---	Cr - 0.003
TSS	N/A	---	---	---	As - 0.075
Ammonia	N/A	---	---	---	
Oil & Grease		---	---	13 PPM	
pH		---	---	6.5 S.U.	
Phenols		---	---	93 PPM	

B. Review the substances listed in Table One and indicate which of these substances you have reason to believe may be in your discharge. For instance you may use solvents or Biocides that contain one or more of the indicated solvents. For each substance indicated you must perform at least one analysis and report results.

A pollutant GC/MS scan for the 67 listed substances in Table One has not been performed on the effluent. Creosote is the only preservative used at the Columbus Facility and trace quantities of constituents found in creosote might be present in the effluent.

ATTACHMENT 1

PRODUCTION PROCESS SYSTEM

12. The Columbus production process system pressure treats wood products with creosote. The dry wood charge is placed in a treating cylinder, immersed in the creosote and pressure is applied to the cylinder to impregnate the wood with the preservative. After treatment, a vacuum is placed on the treating cylinder to recover excess preservative. The volume of process wastewater from the treating cylinder is approximately 300 gallons a charge, and consists of vacuum seal water and condensate.

Most of the wood treated by this plant is air dried. However, at times it is necessary to dry the wood before treatment using the Boulton process. This is done by placing the wood in the treating cylinder, applying heat, and pulling a vacuum on the cylinder. The drying cycle generates approximately 2,000 gallons of wood sap water and approximately 13,500 gallons of vacuum seal water and steam condensate.

Rainwater runoff contained in front of the treating cylinders and in the diked areas around the storage tanks, is collected and recycled to the production process water treatment system.

The production process water treatment system recovers suspended and settleable creosote through the use of a dual polymer feed. The recovered creosote is returned to storage tanks for reuse, and treated wastewater not recycled to the production process is discharged to the city sewer system.

TABLE 1

65 Toxic Pollutants Listed in Consent Decree and Referenced in 307 (a) of the CWA of 1977

Believe Present		Concen.	Believe Present		Concen.
X	Acenaphthene			Endrin & Metabolities	
	Acrolein			Ethylbenzene	
	Acrylonitrile		X	Flouranthene	
	Aldrin/Dieldrin			Haloethers	
	Antimony & compounds			Halomethanes	
X	Arsenic & compounds	0.075 PPM		Hepthachlor & metabolities	
	Asbestos			Hexachlorobutadiene	
	Benzene			Hexachlorocyclo-pentadiene	
	Benzidine			Hexachlorocylohexane	
	Beryllium & compounds			Isophorone	
	Cadmium & compounds			Lead & compounds	
	Carbon tetrachloride			Mercury & compounds	
	Chlordane		X	Naphthalene	
	Chlorinated benzenes			Nickel & compounds	
	Chlorinated ethanes			Nitrobenzene	
	Chlorinalkyl ethers			Nitrophenols	
	Chlorinated naphthalene			Nitrosamines	
	Chlorinated phenols			Pentachlorophenol	
	Chloroform		X	Phenol	
	2-Chlorophenol			Phthalate esters	
X	Chromium & compounds	0.03 PPM		Polychlorinated byphenyls (PCB)	
X	Copper & compounds	0.017 PPM		Polynuclear aromatic	
	Cyanides		X	Hydrocarbons	
	DDT & metabolities			Selenium & compounds	
	Dichlorobenzenes			Silver & compounds	
	Dichlorobenzine			2,3,7,8-Tetrachloro-dibenzo-p-dioxine(TCDD)	
	Dichloroethylenes			Tetrachloroethylene	
	2,4-Dichlorophenol			Thallium & compounds	
	Dichloropropane & Dichloropropene			Toluene	
	2,4-Dimethylphenol			Toxaphene	
	Dinitrotoluene			Trichloroethylene	
	Diphenylhydrazine			Vinyl chloride	
	Endusolfan & metabolities			Zinc & compounds	

List any other toxicants known or anticipated to be present in the discharge:

Creosote is the only preservative used at the Columbus facility. Constituents noted in Table 1 are believed to be present in trace amounts.

15. Treatment Units:

A. Do you provide treatment for your wastewater? ___Yes X No

B. If yes, list and describe each treatment unit and attach a line schematic of the treatment system indicating each treatment unit and a water balance.

KMCC does not provide wastewater treatment. However, within the production process KMCC-FPD utilizes a 2 stage, polymer assisted preservative recovery system. The system is designed to remove creosote and recycle it within the production process.

I certify that I am familiar with the information contained in this application and that to the best of my knowledge and belief such information is true and correct.

J. H. Bull
Printed Name of Applicant's Authorized

Manager, Environmental Control & Regulatory Affairs
Title

10/6/88
Date Application Signed

Signature of Authorized Agent

Application Number

Date Received

STATE OF MISSISSIPPI
BUREAU OF POLLUTION CONTROL
P. O. BOX 10385
JACKSON, MISSISSIPPI 39209

APPLICATION FOR A STATE OPERATING PERMIT

(Please print or type)

1. **Name of Applicant:** Kerr McGee Chemical Corporation
   Forest Products Division

2. **Mailing Address of Applicant:**

   Number & Street (P.O. Box): 607 14th Street North, P. O. Box 906

   City: Columbus **State:** Mississippi **Zip:** 39701

3. **Applicant's Authorized Agent:**

   Name & Title: P. C. Gaskin, Environmental and Quality Control

   Number & Street (P.O. Box): P. O. Box 25861, Kerr McGee Center

   City: Oklahoma City **State:** Oklahoma **Zip:** 73125

   Telephone Number: 405/270-2395

4. **Facilities Location:**

   Number & Street: 607 14th Street North

   City: Columbus **County:** Lowndes

5. **Nature of Business:** Wood Preserving Facility

6. **Do you Discharge Wastewater to a POTW?** __x__ **Yes** _____ **No**
   If "Yes" Continue, if "No" go to Item 10.

   Name of POTW Receiving Wastewater: Columbus, Mississippi
   Wastewater Treatment Plant

   Number & Street (P.O. Box): Pickensville Road

   City: Columbus **County:** Lowndes

7. Discharge Type and Occurrence:

A. Type of Discharge: X Continuous; If Continuous, 15,000 Gallons per Day (Max.)

____ Batch

B. Discharge Occurrence: 7 Days per Week

C. Discharge Occurrence: (Months per Year)

X	Jan.	X	Feb.	X	Mar.	X	Apr.
X	May	X	Jun.	X	Jul.	X	Aug.
X	Sept.	X	Oct.	X	Nov.	X	Dec.

8. If Batch: N/A

A. ____ Thousand Gallons per Discharge

B. ____ Hours per Day

C. ____ Discharge Occurrences per Day

9. Maximum Period of Flow: From October (Month) to April (Month)

10. Facility Water Use:

Estimate average volume in thousand gallons per day for the following types of water usage at this facility.

Noncontact Cooling:	2,000
Boiler Feed:	10,000
Process (Including Contact Cooling):	2,000
Sanitary:	500
Other:	N/A
Total:	14,500

11. List All Facility Discharges:

Other water losses (surface water, product consumption, evaporation). Indicate volume in thousand gallons.

Steam evaporation	3,500
Steam Condensate (recycled)	5,500
Boiler blowdown (discharge)	1,000
Treated wastewater (discharge)	3,000
Sanitary (discharge)	500
Cooling tower evaporation	2,000
Treated surface runoff (discharge)	500

12. The Columbus plant is a wood preserving plant that pressure treats wood products (mainly crossties) with creosote. The dry wood is placed in a pressure cylinder, immersed in the treating oil(creosote) and pressure is applied to the cylinder for a period of time to impregnate the wood with the preservative. After treating is complete, a vacuum is placed on the pressure cylinder to remove excess preservative. The volume of contaminated wastewater from the treating cylinder is small, approximately 300 gallons per charge, and consists mostly of vacuum seal water and condensate.

Most of the wood treated by this plant is air dried. However, at times it is necessary to dry the wood before treatment. This is done by placing the wood in the cylinder, applying heat, and pulling a vacuum on the cylinder. These drying cycles generate some 6,000 gallons of wastewater per charge. This water consists of wood sap (approximately 1,800 gallons), vacuum seal water (approximately 3,900 gallons) and contact condensate.

There is a considerable amount of steam condensate produced in a day. This water is basically clean process water and averages some 6,500 gallons per day.

There is also a small amount of rainwater runoff that is collected and treated. This is the rainwater that collects in front of the treating cylinders and in the diked areas around the storage tanks. This water averages less than 1,000 gallons per one inch of rain.

12. Give narrative description of process(es) producing discharge, or in the case of no discharge, that generates wastewater.

See attached

13. List raw materials used: Wood and creosote

14. Effluent Characteristics:

A. You must provide the results of at least one analysis for every pollutant in this table. Complete one table for each outfall to the city sewer. If your facility does not have a discharge indicate so and disregard.

Parameter	Maximum Daily Value	Maximum 30 Day Value	Long Term Average Value
BOD_5			432 mg/l
COD			± 1700 mg/l
TSS			< 100 mg/l
Ammonia			< 0.5 mg/l
Oil & Grease			40 mg/l
pH			6.0 - 9.0

B. Review the substances listed in Table One and indicate which of these substances you have reason to believe may be in your discharge. For instance you may use solvents or Biocides that contain one or more of the indicated solvents. For each substance indicated you must perform at least one analysis and report results.

A toxic pollutant scan for the 67 substances has not been performed on the treated wastewater. Since creosote is the only preservative used at the Columbus Facility, trace quantities of constituents found in creosote might be present in the treated wastewater discharge.

TABLE 1

65 Toxic Pollutants Listed in Consent Decree and Referenced in 307(a) of the CWA of 1977

Believe Present		Concen.	Believe Present		Concen.
	Acenaphthene			Endrin and Metabolities	
	Acrolein			Ethylbenzene	
	Acrylonitrile			Flouranthene	
	Aldrin/Dieldrin			Haloethers	
	Antimony & compounds			Halomethanes	
	Arsenic & compounds			Heptachlor & metabolities	
	Asbestos			Hexachlorobutadiene	
	Benzene			Hexachlorocyclopentadiene	
	Benzidine			Hexachlorocylohexane	
	Beryllium & compounds			Isophorone	
	Cadmium & compounds			Lead & compounds	
	Carbon tetrachloride			Mercury & compounds	
	Chlordane			Naphthalene	
	Chlorinated benzenes			Nickel & compounds	
	Chlorinated ethanes			Nitrobenzene	
	Chlorinalkyl ethers			Nitrophenols	
	Chlorinated naphthalene			Nitrosamines	
	Chlorinated phenols		X	Pentachlorophenol	<1.0 ppm
	Chloroform		X	Phenol	<300 ppm
	2-Chlorophenol			Phthalate esters	
	Chromium & compounds			Polychlorinated byphenyls(PCB)	
	Copper & compounds			Polynuclear aromatic	
	Cyanides			Hydrocarbons	
	DDT & metabolities			Selenium & compounds	
	Dichlorobenzenes			Silver & compounds	
	Dichlorobenzidine			2,3,7,8-Tetrachlorodibenzo-p-dioxine (TCDD)	
	Dichloroethylenes			Tetrachloroethylene	
	2,4-Dichlorophenol			Thallium & compounds	
	Dichloropropane & Dichloropropene			Toluene	
	2,4-Dimethylphenol			Toxaphene	
	Dinitrotoluene			Trichloroethylene	
	Diphenylhydrazine			Vinyl chloride	
	Endosulfan & metabolities			Zinc & compounds	

List any other toxicants known or anticipated to be present in the discharge:

Creosote is the only preservative used at this facility. We believe this substance can be represented by COD in the treated wastewater discharge.

15. Treatment Units:

A. Do you provide treatment for your wastewater? X **Yes** ____ **No**

B. If yes, list and describe each treatment unit and attach a line schematic of the treatment system indicating each treatment unit and a water balance.

See Attachment I

I certify that I am familiar with the information contained in this application and that to the best of my knowledge and belief such information is true and correct.

P. C. Gaskin	Environmental and Quality Control
Printed Name of Applicant's Authorized Agent	**Title**
October 29, 1984	[signature]
Date Application Signed	**Signature of Authorized Agent**

State of Mississippi
Water Pollution Control
PERMIT

TO OPERATE A WASTE DISPOSAL SYSTEM IN ACCORDANCE

WITH NATIONAL AND STATE PRETREATMENT STANDARDS

THIS CERTIFIES THAT
Kerr-McGee Chemical Corporation
Forest Products Division
Columbus, Mississippi
has been granted permission to discharge wastewater into
Columbus POTW

in accordance with effluent limitations, monitoring requirements and other conditions set forth in this permit. This permit is issued in accordance with the provisions of the Mississippi Water Pollution Control Law (Section 49-17-1 et seq., Mississippi Code of 1972), and the regulations and standards adopted and promulgated thereunder, and under authority granted pursuant to Section 402 (b) of the Federal Water Pollution Control Act.

The issuance of this permit does not relieve the permittee from complying with any requirements which the Publicly Owned Treatment Works (POTW) Authority may deem necessary as a prerequisite to the use of the Authority's sewage system and associated treatment works.

MISSISSIPPI POLLUTION CONTROL PERMIT BOARD

Original Signed By
CHARLES CHISOLM

DIRECTOR, BUREAU OF POLLUTION CONTROL
MISSISSIPPI DEPARTMENT OF NATURAL RESOURCES

Issued: May 1, 1984

Expires: April 30, 1989

Permit No. PT90021

B. SCHEDULE OF COMPLIANCE

1. The permittee shall achieve compliance with the effluent limitations specified for discharge in accordance with the following schedule:

2. No later than 10 calendar days following a date identified in the above schedule of compliance, the permittee shall submit either a report of progress or, in the case of specific actions being required by identified dates, a written notice of compliance or noncompliance. In the latter case, the notice shall include the cause of noncompliance, any remedial actions taken, and the probability of meeting the next scheduled requirement.

C. GENERAL PRETREATMENT PROHIBITIONS

1. In addition to those pollutants limited in Part I.A, the following pollutants shall not be discharged into the POTW:

   (a) Pollutants which create a fire or explosion hazard in the POTW;

   (b) Pollutants which will cause corrosive structural damage to the POTW, but in no case discharges with pH lower than 5.0, unless the works is specifically designed to accommodate such discharges;

   (c) Solid or viscous pollutants in amounts which will cause obstruction to the flow in the POTW resulting in interference;

   (d) Any pollutant, including oxygen demanding pollutants (BOD, etc.) released in a discharge at a flow rate and/or pollutant concentration which will cause interference with the POTW; or

   (e) Heat in amounts which will inhibit biological activity in the POTW resulting in interference, but in no case heat in such quantities that the temperature at the POTW treatment plant exceeds 40 C (104° F) unless the approval Authority, upon request of the POTW, approves alternate limits.

D. ORAL NOTIFICATION REQUIREMENTS

The permittee shall notify the Mississippi Pollution Control Permit Board and the POTW orally immediately upon becoming aware of the following:

1. A spill which would result in a discharge to the POTW;

2. Any diversion or bypass of the wastewater treatment system which would result in a discharge to the POTW; or

3. Any system upset which would cause the facility to be in noncompliance with the limitations found in Part I.A or I.C of this permit.

E. OTHER SPECIFIC PRETREATMENT REQUIREMENTS

1. The discharge from this facility must be bled into the POTW collection system on a daily basis at a continuous rate over a a 24-hour period.

2. If at any time the discharge from this facility interferes with the operation of the Columbus Wastewater Treatment Plant or causes violation of water quality standards in the Luxapaltila Creek, the facility must discontinue this discharge.

PART II

A. MANAGEMENT REQUIREMENTS AND RESPONSIBILITIES

1. No Discharge of Wastewater to Surface Water

The discharge of any wastewater from this facility to the waters of the State of Mississippi shall constitute a violation of this permit, except as provided in Section A.4 of this permit, or as authorized under separate permit pursuant to Section 402 of the Federal Water Pollution Control Act.

2. Change in Wastewater Source

Any anticipated facility expansions, production increases, or process modifications which will result in new, different, or increased wastewater flows, must be reported to the Mississippi Pollution Control Permit Board. Following such notice, if the Permit Board determines that such change will violate any condition of this permit, it may require the submittal of a new application, or it may modify this permit accordingly.

3. Facilities Operation

The permittee shall at all times maintain in good working order and operate as efficiently as possible all treatment or control facilities or systems installed or used by the permittee to achieve compliance with the terms and conditions of this permit.

4. Bypassing

Any diversion from or bypass of wastewater collection and treatment or control facilities is prohibited, except (i) where unavoidable to prevent loss of life or severe property damage, or (ii) where excessive storm drainage or runoff would damage any facilities necessary for compliance with the effluent limitations and prohibitions of this permit. The permittee shall notify the Mississippi Pollution Control Permit Board in writing of each such diversion or bypass in advance where practicable but in any case, within 72 hours of the diversion or bypass, and shall submit to the Permit Board a plan to prevent recurrence of the diversion or bypass within thirty (30) days of the incident.

5. Removed Substances

Solids, sludges, filter backwash, or other residuals removed in the course of treatment or control of wastewaters shall be disposed of in a manner such as to prevent such materials from entering State waters and in a manner consistent with the Mississippi Solid Waste Disposal Act and the Federal Resource Conservation and Recovery Act.

5. Records Retention

(a) All records and information resulting from the monitoring activities required by this permit (including all records of analyses performed; calibration and maintenance of instrumentation; and recordings from continuous monitoring instrumentation) shall be retained for a minimum of three (3) years, or longer if requested by the Permit Board.

(b) The permittee shall furnish to the Permit Board, upon request, copies of records required to be kept by this permit.

6. Noncompliance Reporting

This permittee shall report any instances of noncompliance orally to the Director, or his representative, within 24 hours of becoming aware of the circumstances. A written report shall also be provided within five (5) days of such time, and shall contain the following information:

(a) A description of the noncompliance and its cause, if known.

(b) The period of noncompliance, including exact dates and times; or if not corrected, the anticipated time the noncompliance is expected to continue, and steps being taken to reduce, eliminate, and prevent recurrence.

7. Right of Entry

The permittee shall allow the Mississippi Pollution Control Permit Board and/or its authorized representation of credentials:

(a) To enter upon the permittee's premises where a wastewater source is located or in which records are required to be kept under the terms and conditions of this permit; and

(b) At reasonable times to have access to and copy any records required to be kept under the terms and conditions of this permit; to inspect any monitoring equipment or monitoring method required in this permit; and to sample any wastewater generated at this facility.

8. Transfer of Ownership or Control

This permit is not transferable to any person except after proper notice. In the event of any change in control or ownership of facilities, the permittee shall notify the Mississippi Pollution Control Permit Board at least thirty (30) days in advance of the proposed transfer date. The notice should include a written agreement between the existing and new permittees containing a specific date for the transfer of permit responsibility, coverage, and liability.

9. Availability of Records

Except for data determined to be confidential under the Mississippi Air and Water Pollution Control Law, all reports prepared in accordance with the terms of this permit shall be available for public inspection at the offices of the Mississippi Bureau of Pollution Control.

C. OTHER REQUIREMENTS

1. Reporting

Monitoring results obtained during the previous three months shall be summarized for each month and reported on a Discharge Monitoring Report Form (EPA No. 3320-1), postmarked no later than the 28th day of the month following the completed reporting period. The first report is due on April 28, 1984. Signed copies of these, and all other reports required herein, shall be submitted to the Mississippi Pollution Control Permit Board at the address found in Part 2 Section B, 1.

2. Definitions

a. The "daily average" is the arithmetic mean of all samples collected in a one-month period.

b. The "daily maximum" is the highest value recorded of any sample collected on any single day of the calendar month.

VI. POTW Receiving Discharge

The Columbus, Mississippi activated sludge plant:

Design Flow - 10.00 MGD
Actual Flow - 4.50 MGD

Receiving Stream - Luxapallila Creek

7Q10 Flow - 32.95 MGD

VII. Interference and Water Quality Review

Inspection of Kerr-McGee's current pretreatment permit, PT90021, reveals that this facility is required to monitor the following parameters:

Oil & Grease
Total Phenols
Copper
Chromium
Arsenic

Further inspection of this facility's file and pretreatment permit application reveal that Kerr-McGee has historically shown extremely low concentrations of copper, chromium, and arsenic in their process wastewater. In fact, this facility does not use copper, chromium, and arsenic in its wood preserving process.

Therefore, consideration will not be given to these three parameters in the following toxicity screening. Accordingly, those three parameters will be deleted from PT90021 upon its reissuance due to their historically low concentrations in Kerr-McGee's wastewater effluent.

Toxicity Screening for Phenol

Using:

$$L_{in} = \frac{8.34 \{C_{crit} (Q_{str} + Q_{potw})\}}{1 - R_{potw}}$$

Where:

C_{crit} = 0.102 mg/l for chronic screening
= 1.02 mg/l for acute screening
= 0.300 mg/l for human health

Q_{str} = 32.95 MGD for chronic screening
= 24.71 MGD for acute screening
= 46.13 MGD for human health

Q_{potw} = 4.50 MGD (January - December 1988 average)

R_{potw} = 90% = 0.90
(from EPA POTW Guidance Manual ...)

L_{in} = Allowable POTW headworks loading
(from instream water quality standards)

We obtain the following allowable mass loading into the Columbus POTW:

Chronic - 318.6 lbs phenol/day
Acute - 2484.8 lbs phenol/day
Human Health - 1266.8 lbs phenol/day

From the permit application, we find that the long term average phenol concentration in Kerr-McGee's wastewater effluent is 93 mg/l. Utilize this value for Kerr-McGee's average loading and 93 x 1.5 = 139.5 mg/l for their daily maximum loading:

8.34 QC = L Where: Q = 0.023 MGD (from application)

Average: 17.8 lbs phenol/day
Maximum: 26.8 lbs phenol/day

The resulting concentration of phenol at the POTW is:

Phenol Concentration	Inhibitory Level
0.47 mg/l (average) 0.71 mg/l (maximum)	50-200 mg/l

Thus, no biological inhibition due to phenol should be experienced at the Columbus POTW.

Kerr-McGee's current maximum permit limitation for phenol is 48.8 lbs/day. Obviously, this loading should cause no problems at the Columbus POTW or with water quality in Luxapallila Creek. Reissuance of PT90021, with its current phenol limitations, is therefore recommended.

TE:els

INDUSTRIAL - PRETREATMENT PERMIT REISSUANCES

Jackson Packing Company	Hinds County	PT90039
International Paper Company	Stone County	PT90033
Kerr-McGee Chemical Corporation	Lowndes County	PT90021

INDUSTRIAL - PRETREATMENT PERMIT MODIFICATIONS

Thompson International, Inc.	Marshall County	PT90195
American Commercial China	Harrison County	PT90261

INDUSTRIAL - NEW SOURCE STATE OPERATING PERMITS

Superior Sand and Gravel Company	Forrest County	BPC 89-028
Steve Sullivan Swine Farm	Franklin County	BPC 89-025
Coastal Dredging and Materials, Inc.	George County	BPC 89-024

INDUSTRIAL - STATE OPERATING PERMIT MODIFICATION

Riverside Gravel-McComb	Pike County	BPC 80-002

process wastewater to the Wiggins East Lagoon. Said process wastewater is generated via pressure treatment of poles and piling with creosote and pentachlorophenol. Permit parameters included in the proposed reissuance: Oil and Grease, Pentachlorophenol, Total Phenols, BOD_5, and pH. The Industrial staff recommends reissuance of PT90033 to the International Paper Company.

NOTE: This facility is regulated by 40 CFR; Part 429.85 {PSES} {Timber Products Point Source Category}. (TSE)

Kerr-McGee Chemical Corporation, PT90021, Lowndes County - Kerr-McGee Chemical Corporation, located in Columbus, Mississippi, has applied for reissuance of PT90021 to discharge 0.023 MGD of treated process wastewater to the Columbus POTW. Said process wastewater is generated as a result of facility wood preserving operations (i.e., via pressure treatment and application of the Boulton process to wood products w/creosote). Permit parameters included in the proposed reissuance: Oil and Grease, Total Phenols, and pH. The Industrial staff recommends reissuance of PT90021 to the Kerr-McGee Chemical Corporation.

NOTE: This facility is regulated by 40 CFR; Parts 429.85 and 429.95 {Timber Products Processing Point Source Category}. (TSE)

MODIFICATION - PRETREATMENT

Thompson International, Inc., PT90195, Marshall County - This facility is changing its name from ITT Thompson Industries, Inc., to Thompson International, Inc. The operations at this facility will remain that of manufacturing wheel covers for the automotive industry. Wastewater originates from continuous rinses used in plating operation. Treatment consists of flocculation, clarification, and pH adjustment. Flow Rate = 10,000 GPD to Holly Springs POTW. Permit parameters include those listed under the EPA Metal Finishing Guidelines. (JB)

American Commercial China, PT90261, Harrison County - The name of this facility was mistakenly called Stolco, Inc. However, American Commercial China is the correct name and Stolco, Inc., is the parent company. Therefore, the permit name needs to be changed. This facility manufactures china for the restaurant industry. Wastewater originates from product and equipment rinsing. Treatment consists of settling and filtration. Flow = 22,000 GPD to the Long Beach Industrial Park treatment system. (JB)

NEW SOURCE - STATE OPERATING

Superior Sand and Gravel Company, 89-028, Forrest County - We have received a completed permit application and we have received a site inspection from our South Regional Office. No problems were found. The facility is a closed system dredge operation. It is located in Section 9, T3N, R12W, near the McCallum Community. If a discharge were to occur, it would flow into the Leaf River. (MH)

Steve Sullivan Swine Farm, 89-025, Franklin County - We have completed a site inspection. There were no problems with buffer zones or access to State waters. Also, we have received a SCS

PERMIT (NPDES): MS[redacted]90021

TRANSACTION CODE (N=NEW C=CHANGE): N

FACILITY DATA SCREEN #1 (FAC1)

FACILITY NAME: KERR McGEE CHEMICAL CORPORATION

COGNIZANT OFFICIAL: MR. G. R. HARROD

COUNTY CODE (See Table #1):

TELEPHONE NUMBER: 601-328-7551

*CITY: COLUMBUS

*SIC CODE (See Table #1):

TYPE OF APPLICATION (See Table #2):

*FAC. OWNERSHIP (See Table #3):

TYPE OF PERMIT: S

*FEDERAL GRANT 92-500 ONLY "$":

IF THIS IS A REISSUANCE, DID THE PERMIT LIMITS CHANGE (Y/N): Y

WATER QUALITY LIMITS: N

*FACILITY INACTIVE CODE:

*FACILITY INACTIVE DATE: - -

SUB-REGION: NO (NO=NRO CO=CRO SO=SRO)

ENGINEER (initials): TSE

*AVERAGE DESIGN FLOW: 0.023 MGD

Permit Tracking (PTRK)

Engineer (u.d.e. #1): TSE

Permit Issued (P4099): 05-23-89

Permit Expires (P5099): 05-22-94

Facility Data Screen #2 (FAC2)

* River Basin #: 0338

1018 - Big Black
0343 - Pearl River
0338 - Upper Tombigbee River
0340 - Lower Tombigbee River
0408 - Tennessee River
1099 - Coastal Streams
1021 - South Independent
1011 - Yazoo River
0342 - Pascagoula River
1006 - Mississippi River

Receiving Waters: MS0023868 COLUMBUS POTW

- - - - - - - USER DATA ELEMENTS - - - - - - -

Facility Type (rdf1): P

I = Industrial
X = Ind. No-rpt.
P = Pretreatment
M = Municipal
D = Domestic
N = Dom. No-rpt.
F = Federal

Toxic & Bio-Assay Code (rdf2):

T = Toxic
A = Acute
C = Chronic

Treatment Type (rdf4): PC

AC = Activated Carbon
AS = Activated Sludge
AL = Aerated Lagoon
AN = Anaerobic Lagoon
API= API Separator
AW = Artifical Wetlands
CC = Contact Cooling
CL = Conventional Lagoon
CT = Cooling Tower
DW = Deepwell
DF = Diffuser
EOP= End of Pipe
EV = Evaporation
HC = Hydrograph Controlled
ML = Multiple Lagoon
NC = Non-Contact Cooling
OS = Off Site Disposal
OF = Overland Flow
OD = Oxidation Ditch
PH = PH Adjustment
PC = Physical / Chemical
PS = Primary Sedimentation
RR = Recyle and Reuse
RO = Reverse Osmosis
RBC= Rotating Biological Contractor
SF = Sand Filter
SS = Secondary Sedimentation
SI = Spray Irrigation
TF = Trickling Filter

cility Address Screen (FA

** Permit # MSP0900621

- - - - * Primary DMR Mailing Address - - - -

Facility Name: KERR McGEE CHEMICAL CORP.

Address Line1 (MST1): FOREST PRODUCTS DIVISION

Address Line2 (MST2): P. O. Box 906

CITY: COLUMBUS ST: MS Zip: 39701

- - - - Alternate DMR Mailing Address - - - -

Facility Name:

Address Line1 (AST1):

Address Line2 (AST2):

CITY: ST: Zip:

- - - - Facility Location Address (SAME) - -

Facility Name:

Address Line1 (RST1): 14TH AVE. AND 20TH ST. NORTH

Address Line2 (RST2):

CITY: COLUMBUS ST: MS Zip: 39701

Telephone: 601 - 328 - 7551

** Items marked with a double asterisk are items that MUST be entered before the form can be entered into the PCS system.

* Items marked with just one asterisk are items that the EPA would very much like to see but are not necessary for input into PCS.

All other items are optional

OUTFALL GENERAL DATA SCREEN (OFLG)

**PERMIT # : MSP0090021 **TRANSACTION CODE : N (N=New C=Change)

**DISCHARGE NUMBER : 001 **REPORT DESIGNATOR : A

*INITIAL REPORT DATE : 05-01-89 *REPORT UNITS : M

*NUMBER OF UNITS IN REPORT PERIOD : 001 ***TOTAL NUMBER OF UNITS DUE : 060

*INITIAL STATE SUBMISSION DATE : 06-28-89 STATE SUBMISSION UNIT : M

PIPE DESCRIPTION : PRETREATED PROCESS WASTEWATER

SEASONAL DMR PRINTING INDICATORS : Y Y Y Y Y Y Y Y Y Y Y Y

INITIAL LIMIT DATES : START -- - -- - -- END -- - -- - --

INTERIM LIMIT DATES : START -- - -- - -- END -- - -- - --

FINAL LIMIT DATES : START -- - -- - -- END -- - -- - --

PIPE INACTIVE CODE : PIPE INACTIVE DATE : -- - -- - --

** Items marked with a double asterisk are items that MUST be entered before the form can be entered into the PCS system.

* Items marked with just one asterisk are items that the EPA would very much like to see but are not necessary for input into PCS.

*** - See Warren if the life of this permit is other than 5 years

All other items are optional

PUBLIC NOTICE

Mississippi Natural Resources Permit Board
P. O. Box 10385
Jackson, MS 39209
Telephone No. (601) 961-5171

April 1, 1989

The Kerr-McGee Chemical Corporation, Forest Products Division, Box 906, Columbus, Mississippi 39701, has applied to the Mississippi Natural Resources Permit Board for the reissuance of a Pretreatment Permit to discharge pretreated process wastewater and boiler blowdown into the Columbus POTW. The applicant's operation is in the pressure treatment of wood with standard wood preservatives. One discharge is described in the application.

The environmental impact of this project has been evaluated and the staff of the Permit Board believes that, with proper environmental constraints and limitations on the applicant, this project will operate within all State and Federal environmental laws and standards. Therefore, the staff of the Board has preliminarily decided, based on available information, to recommend to the Board that a permit be issued containing numerous environmental regulatory constraints specifically stated in the draft permit. However, before proceeding further with the staff evaluation, public comments are being solicited. The staff recommendation to the Board, as well as the Board decision, will be made only after a thorough consideration of all public comments.

Persons wishing to comment upon or object to the proposed determinations are invited to submit comments in writing to Mr. Louis Lavallee at the above address, no later than April 30, 1989. All comments received by that date will be considered in the formulation of final determinations regarding the application. A public hearing will be held if the Permit Board finds a significant degree of public interest in the proposed permit.

The Permit Board is limited in the scope of its analysis to environmental impact. Any comments relative to zoning or economic and social impacts are within the jurisdiction of local zoning and planning authorities and should be addressed to them.

Additional details about the application and the proposed determination, a sketch showing the location of the discharge, and a copy of the draft permit are available by writing or calling Mr. Todd S. Edwards at the above address and telephone number. Also, this and other information is available for review and copying during normal business hours at the Southport Center Building located at 2380 Highway 80 West, Jackson, MS.

Please bring the foregoing to the attention of persons whom you know will be interested.

DRAFT

State of Mississippi
Water Pollution Control
PERMIT

TO OPERATE A WASTE DISPOSAL SYSTEM IN ACCORDANCE

WITH NATIONAL AND STATE PRETREATMENT STANDARDS

THIS CERTIFIES THAT
Kerr-McGee Chemical Corporation
Forest Products Division
Columbus, Mississippi
has been granted permission to discharge wastewater into
Columbus POTW

in accordance with effluent limitations, monitoring requirements and other conditions set forth in this permit. This permit is issued in accordance with the provisions of the Mississippi Water Pollution Control Law (Section 49-17-1 et seq., Mississippi Code of 1972), and the regulations and standards adopted and promulgated thereunder, and under authority granted pursuant to Section 402 (b) of the Federal Water Pollution Control Act.

The issuance of this permit does not relieve the permittee from complying with any requirements which the Publicly Owned Treatment Works (POTW) Authority may deem necessary as a prerequisite to the use of the Authority's sewage system and associated treatment works.

MISSISSIPPI POLLUTION CONTROL PERMIT BOARD

_____

DIRECTOR, BUREAU OF POLLUTION CONTROL
MISSISSIPPI DEPARTMENT OF NATURAL RESOURCES

Issued: May 1, 1984

Expires: April 30, 1989

Permit No. PT90021

PART I

A. PRETREATMENT LIMITATIONS AND MONITORING REQUIREMENTS

1. During the period beginning May 1, 1984, and lasting until April 30, 1989, the permittee is authorized to discharge from outfall(s) serial number(s) 001 (Pretreated Process Wastewater, non-contact cooling water, and boiler blowdown).

   Such discharges shall be limited and monitored by the permittee as specified below:

PARAMETER	DISCHARGE LIMITATIONS				MONITORING REQUIREMENTS	
	kg/day (lbs/day)		Other Units (Specify)		Measurement Frequency	Sampling Type
	Daily Avg.	Daily Max.	Daily Avg.	Daily Max.		
Flow - M^3/day (MGD)	--	--	--	--	Once/Day	Instantaneous
Oil and Grease	.75(1.7)	1.5(3.3)	50 mg/1	100 mg/1	Three/Week	Grab
Copper	--	.075(.17)	--	5 mg/1	Once/Year	24-Hour Composite
Chromium	--	.06(.13)	--	4 mg/1	Once/Year	24-Hour Composite
Arsenic	--	.06(.13)	--	4 mg/1	Once/Year	24-Hour Composite

2. The pH shall not be less than 5. 0 standard units and shall be monitored three times per week with a grab sample of the effluent.

3. Samples taken in compliance with the monitoring requirements specified above shall be taken at the following location(s): at the nearest accessible point after final treatment but prior to actual discharge into the POTW collection system.

PART II

A. MANAGEMENT REQUIREMENTS AND RESPONSIBILITIES

1. No Discharge of Wastewater to Surface Water

The discharge of any wastewater from this facility to the waters of the State of Mississippi shall constitute a violation of this permit, except as provided in Section A.4 of this permit, or as authorized under separate permit pursuant to Section 402 of the Federal Water Pollution Control Act.

2. Change in Wastewater Source

Any anticipated facility expansions, production increases, or process modifications which will result in new, different, or increased wastewater flows, must be reported to the Mississippi Pollution Control Permit Board. Following such notice, if the Permit Board determines that such change will violate any condition of this permit, it may require the submittal of a new application, or it may modify this permit accordingly.

3. Facilities Operation

The permittee shall at all times maintain in good working order and operate as efficiently as possible all treatment or control facilities or systems installed or used by the permittee to achieve compliance with the terms and conditions of this permit.

4. Bypassing

Any diversion from or bypass of wastewater collection and treatment or control facilities is prohibited, except (i) where unavoidable to prevent loss of life or severe property damage, or (ii) where excessive storm drainage or runoff would damage any facilities necessary for compliance with the effluent limitations and prohibitions of this permit. The permittee shall notify the Mississippi Pollution Control Permit Board in writing of each such diversion or bypass in advance where practicable but in any case, within 72 hours of the diversion or bypass, and shall submit to the Permit Board a plan to prevent recurrence of the diversion or bypass within thirty (30) days of the incident.

5. Removed Substances

Solids, sludges, filter backwash, or other residuals removed in the course of treatment or control of wastewaters shall be disposed of in a manner such as to prevent such materials from entering State waters and in a manner consistent with the Mississippi Solid Waste Disposal Act and the Federal Resource Conservation and Recovery Act.

5. Records Retention

(a) All records and information resulting from the monitoring activities required by this permit (including all records of analyses performed; calibration and maintenance of instrumentation; and recordings from continuous monitoring instrumentation) shall be retained for a minimum of three (3) years, or longer if requested by the Permit Board.

(b) The permittee shall furnish to the Permit Board, upon request, copies of records required to be kept by this permit.

6. Noncompliance Reporting

This permittee shall report any instances of noncompliance orally to the Director, or his representative, within 24 hours of becoming aware of the circumstances. A written report shall also be provided within five (5) days of such time, and shall contain the following information:

(a) A description of the noncompliance and its cause, if known.

(b) The period of noncompliance, including exact dates and times; or if not corrected, the anticipated time the noncompliance is expected to continue, and steps being taken to reduce, eliminate, and prevent recurrence.

7. Right of Entry

The permittee shall allow the Mississippi Pollution Control Permit Board and/or its authorized representation of credentials:

(a) To enter upon the permittee's premises where a wastewater source is located or in which records are required to be kept under the terms and conditions of this permit; and

(b) At reasonable times to have access to and copy any records required to be kept under the terms and conditions of this permit; to inspect any monitoring equipment or monitoring method required in this permit; and to sample any wastewater generated at this facility.

8. Transfer of Ownership or Control

This permit is not transferable to any person except after proper notice. In the event of any change in control or ownership of facilities, the permittee shall notify the Mississippi Pollution Control Permit Board at least thirty (30) days in advance of the proposed transfer date. The notice should include a written agreement between the existing and new permittees containing a specific date for the transfer of permit responsibility, coverage, and liability.

9. Availability of Records

Except for data determined to be confidential under the Mississippi Air and Water Pollution Control Law, all reports prepared in accordance with the terms of this permit shall be available for public inspection at the offices of the Mississippi Bureau of Pollution Control.

C. OTHER REQUIREMENTS

1. Reporting

Monitoring results obtained during the previous three months shall be summarized for each month and reported on a Discharge Monitoring Report Form (EPA No. 3320-1), postmarked no later than the 28th day of the month following the completed reporting period. The first report is due on April 28, 1984. Signed copies of these, and all other reports required herein, shall be submitted to the Mississippi Pollution Control Permit Board at the address found in Part 2 Section B, 1.

2. Definitions

a. The "daily average" is the arithmetic mean of all samples collected in a one-month period.

b. The "daily maximum" is the highest value recorded of any sample collected on any single day of the calendar month.

Pretreatment Permit Rationale (For Reissuance)

May 1989

I. Name of Facility

Kerr-McGee Chemical Corporation
Forest Products Division
Box 906
Columbus, Mississippi 39701

Authorized Agent: Mr. E. L. Creekmore
Phone: (601) 328-7551

II. ~~Name~~ Nature of Operations

This facility is in the wood preserving business (creosote only). This process results in a 0.023 MGD discharge to the Columbus POTW.

III. Wastewater Characterization

Parameter	Long Term Average Value
Oil & Grease	13 mg/l
pH	6.5 S.U.
Phenol	93 mg/l
Copper	0.017 mg/l
Chromium	0.003 mg/l
Arsenic	0.075 mg/l

IV. Type of Pretreatment

This facility recovers creosote from its wastewater via polymer addition before discharge into the Columbus POTW.

V. Applicable Regulations

40 CFR, Parts 429.85 and 429.95
Timber Products Processing Point Source Category

Kerr-McGee - Columbus, Ms.
Pretreatment Permit Rationale

POTW : City of Columbus
TYPE of Treatment: Activated Sludge
DESIGN CAPACITY : 10 MGD
ACTUAL FLOW : 3.8 MGD

RECEIVING STREAM : Luxapallila Creek
Q_{10_7} (N.E. of Columbus) = 51 CFS = 33.1 MGD
DILUTION RATIO : 33.1 MGD + 10 MGD ÷ 10 MGD = 4.3
DILUTION RATE = 4.3:1 @ maximum capacity

Controlling Toxic Parameter : Total Phenols
Ms. Water Quality Standard : .05 mg/l (phenolic compounds)
ALLOWABLE EFFLUENT (POTW) CONC. TO MAINTAIN water quality standard: (4.3) (.05 mg/l) = .22 mg/l total phenols @ effluent (POTW)

Allowable phenolic loading to receiving stream:
.22 mg/l * 8.34 * 10 MGD = 18.3 #/day

ASSUME POTW REMOVAL OF 70%
18.3 #/DAY ÷ .70 = 26.1 #/day — ERROR
18.3 #/DAY ÷ .30 = 61 #/DAY

ASSUME 20% margin of error
26.1 #/DAY * .80 = 20.9 #/day ERROR
61 #/DAY * .80 = 48.8 #/DAY

Influent Conc. to POTW

At Q_{POTW} = 3.8 MGD

$$\frac{20.9\ \#/DAY\ Phenols}{(8.34)\ (3.8\ MGD)} = .66\ mg/l$$

(CORRECTED)

$$\frac{48.8}{8.34(3.8)} = 1.5\ mg/l$$

At Q_{POTW} = 10 MGD

$$\frac{20.9\ \#/DAY\ Phenols}{(8.34)\ (10\ MGD)} = .25\ mg/l$$

(CORRECTED)

$$\frac{48.8}{(8.34)(10)} = .59\ mg/l$$

ATTACHMENT I

KERR McGEE CHEMICAL CORPORATION

FOREST PRODUCTS DIVISION

COLUMBUS, MISSISSIPPI FACILITY

EPA-ID NO. MSD 990866329

Proposed changes in the handling and treatment of process wastewater at the Columbus, Mississippi Plant

Prepared by:
Continental Engineering Service
P. O. Box 752
Aberdeen, Mississippi

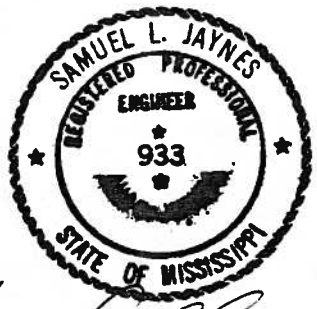

CONTENTS

EXISTING PLANT DESCRIPTION

PROPOSED TREATMENT SYSTEM

WASTEWATER CHARACTERISTICS

WASTEWATER TREATMENT TESTS

KERR-MCGEE CHEMICAL CORPORATION
FOREST PRODUCTS DIVISION
COLUMBUS, MISSISSIPPI FACILITY
EPA-ID NO. MSD 990866329

In April, 1984, Kerr-McGee Chemical Corporation, Forest Products Division, submitted to the Mississippi Bureau of Pollution Control a closure plan for the two surface impoundments at the Columbus, Mississippi Wood Preserving Facility. To facilitate closure, certain changes in the handling and treatment of the process wastewater will have to be completed. The purpose of this report is to present the process design for upgrading the existing system.

EXISTING PLANT DESCRIPTION

The Columbus wood preserving facility was built in 1928 and acquired by Kerr-McGee Corporation in 1964. The main plant consists of approximately 90 acres (figure 1). At the present time, creosote coal tar solution is the only wood preservative used in the plant, although pentachlorophenol was also used until 1976.

Wastewater generated by the wood preserving process is passed through a primary oil/water separator and then split into two streams for parallel passage through a secondary dual-compartment oil/water separator (figure 2). Creosote settles in these vessels where it is recovered and returned to the process for reuse.

From the second stage separator, the waste streams are recombined and discharged to an aeration pond, then to an oxidation pond prior to discharge to the Columbus Publicly Owned Treatment Works (POTW).

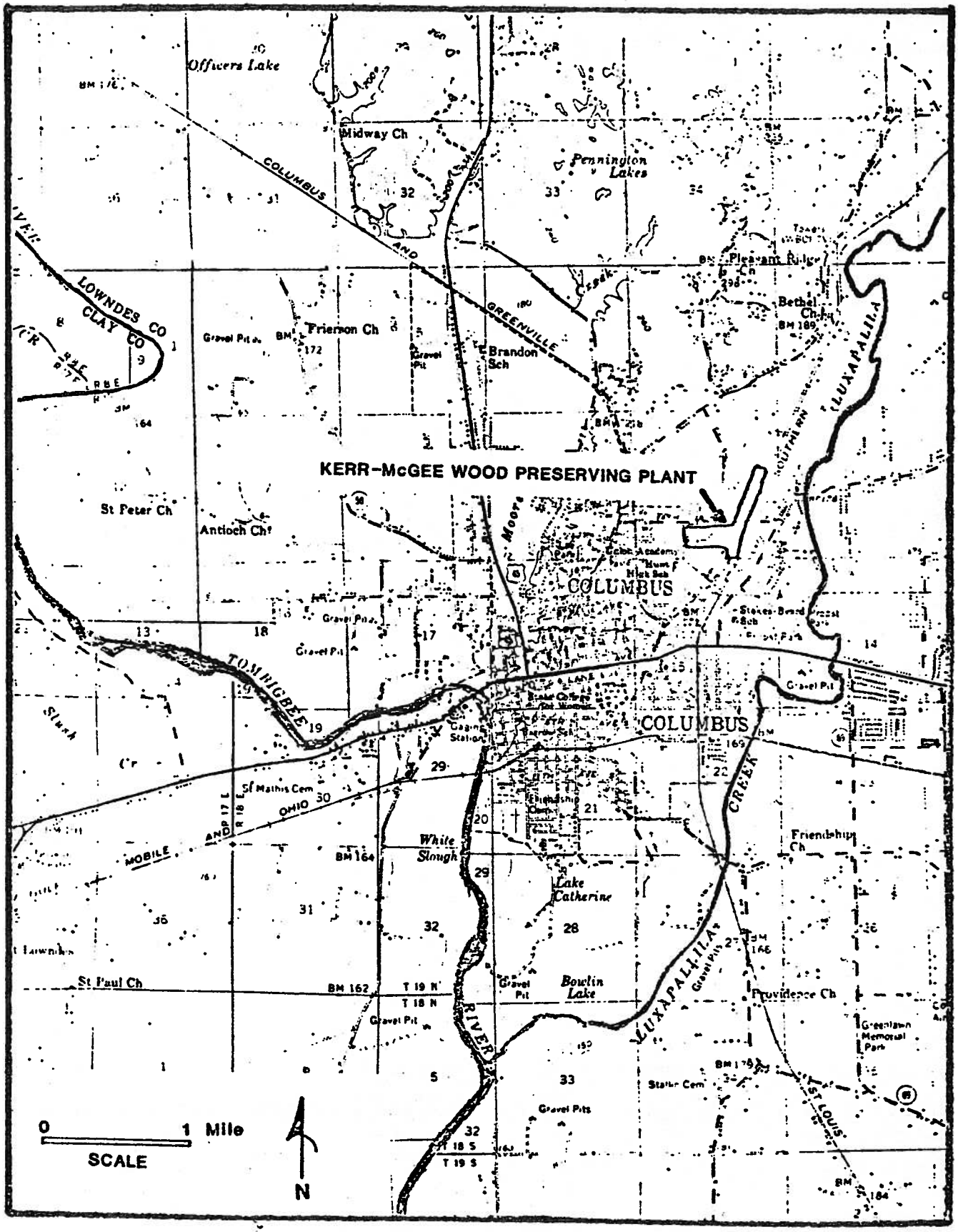

FIGURE 1: KERR-McGEE FACILITY LOCATION

FIG. 2 SCHEMATIC DIAGRAM
KM WOOD PRESERVING PLANT
COLUMBUS, MISSISSIPPI

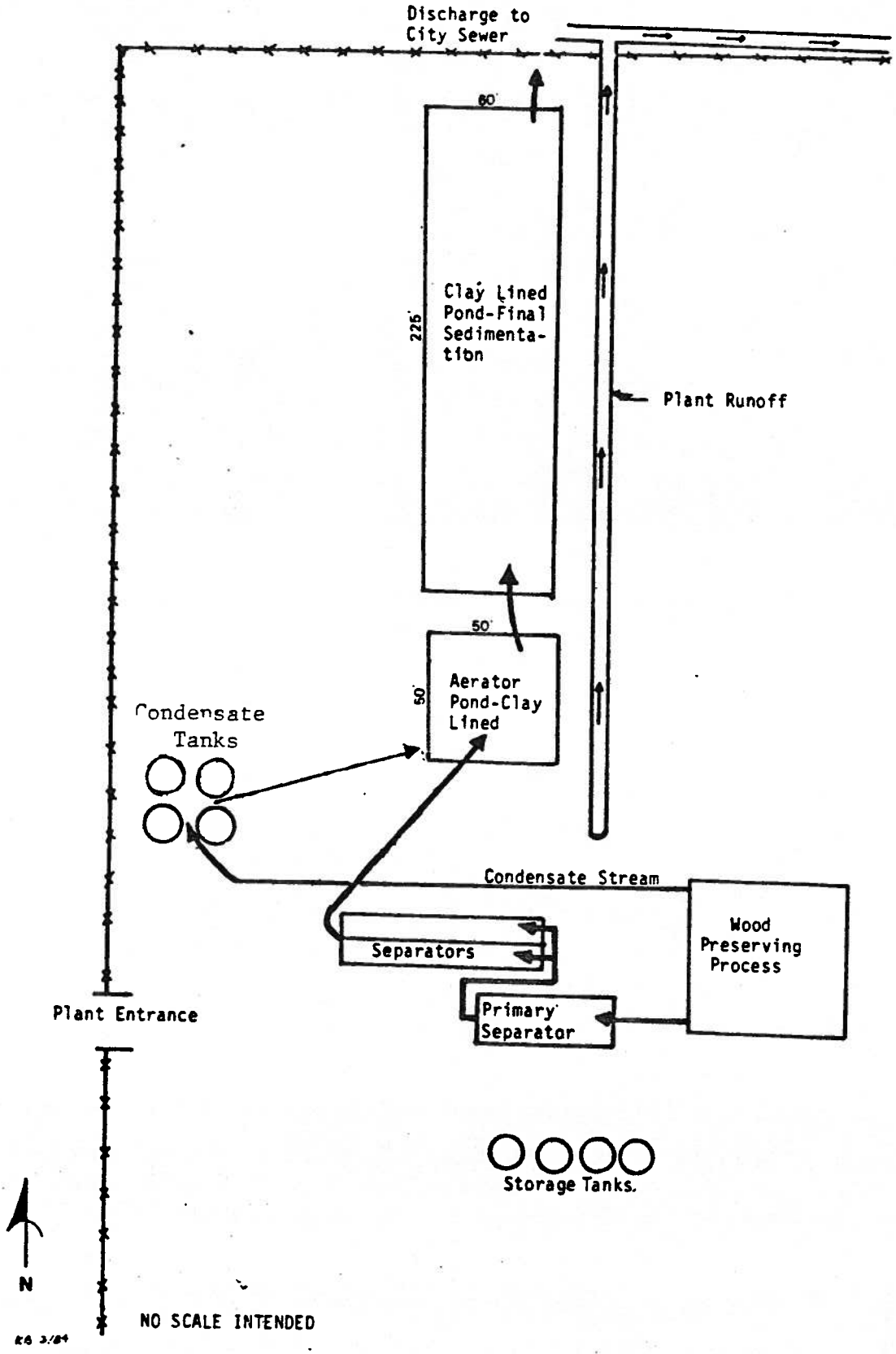

Steam condensate and water that is not contaminated with creosote are discharged into four condensate receiving tanks, then discharged to the aeration pond for commingling and discharge with process wastewater.

PROPOSED TREATMENT SYSTEM

Kerr-McGee is proposing to discontinue the use of the aeration pond and oxidation pond in accordance with State of Mississippi hazardous waste regulations. Before closure of the impoundments can begin, an improved wastewater treatment system will be installed, permitted and operated in accordance with Mississippi Water Pollution Control Law (Section 49-17-1, et seq., Mississippi Code of 1972). The system will pretreat the process wastewater prior to discharging it to the Columbus POTW. The new wastewater treatment system will replace the surface aeration pond and oxidation lagoon.

The proposed upgrading plan includes replacing the treatment effluent in the impoundments with chemical treatment. This will be accomplished by adjusting the pH of the effluent from the primary oil/water separator with caustic soda. A chemical feed pump and an in-line static mixer will feed and mix the caustic soda with the wastewater. Downstream of the caustic addition system and just prior to entering the secondary oil/water separators, a polymeric flocculant will be added to the waste stream with appropriate chemical feed pumps and in-line mixers. The effluent from the secondary separators will be pumped to a series of four holding tanks with a capacity of approximately 60,000 gallons. From the fourth tank the wastewater stream will be recycled to the cooling tower for reuse and the balance released to the city sewer through a new discharge line at a controlled rate. A pH monitor and sampler will be installed to monitor the treatment plant's effluent and to insure that the effluent will comply with any requirements the Columbus POTW authority may deem as necessary prerequisites to the use of its sewage system and treatment works. Refer to the Proposed Wastewater Flow Diagram, dated September, 1984.

WASTEWATER CHARACTERISTICS

The wastewater to be treated by the proposed treatment system includes boiler blowdown and all process wastewaters generated by the production process. Steam condensate will be recirculated to the boilers as boiler feed water.

Recent analyses of the wastewater show that the raw wastewater has the following characteristics:

Oil and Grease	- 162.8	mg/l
Phenol	- 208.7	mg/l
Pentachlorophenol	- <1.0	mg/l
BOD_5	- 322	mg/l
pH	5.18	

The volume of wastewater generated per day will vary from zero to a maximum of around 15,000 gpd. The plant is currently treating dry stock and the volume of wastewater is only 3,000 to 5,000 gpd. When the plant treats green wood, the flow of wastewater will increase to 10-15,000 gpd. This amount does not include potential benefits of recycling treated wastewater as makeup to the cooling tower and clean condensate reuse which together would reduce the volume of wastewater discharged by an estimated 5,000 gpd.

WASTEWATER TREATMENT TESTS

Kerr-McGee is presently studying proposals for the chemical treatment system. The suppliers under consideration are Drew Chemical and Mogul. Both suppliers have the ability to furnish the polymeric flocculants and the chemical injection and mixing equipment.

Tests recently conducted by the vendors indicate that the treated effluent quality will be as follows:

Oil and Grease	- 40	mg/l
Phenols	- 100-300	mg/l
Pentachlorophenol	- <1.0	mg/l
BOD_5	- 250-450	mg/l
pH	- 6.0-9.0	

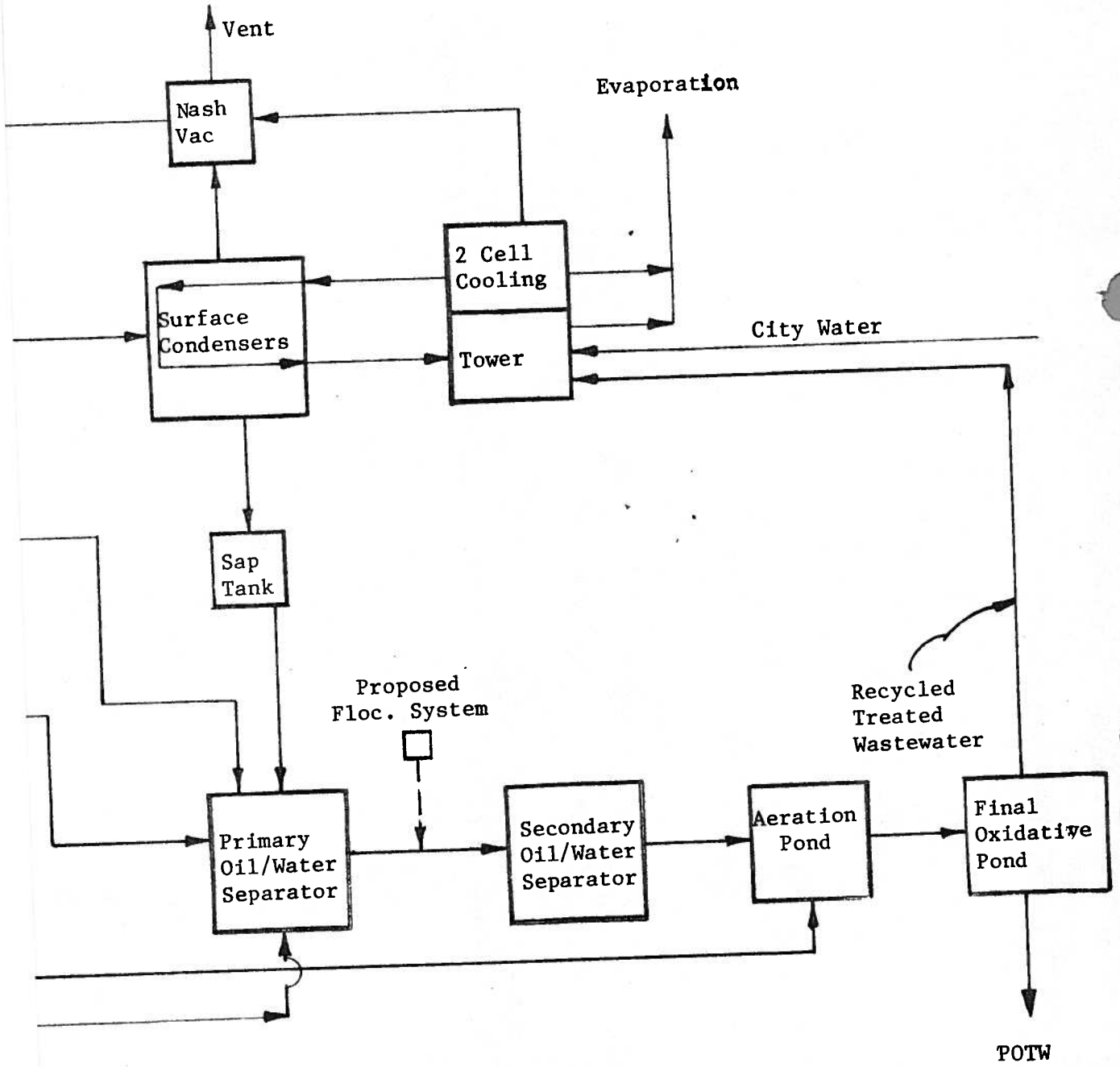
Vent
Nash Vac
Evaporation
2 Cell Cooling
Surface Condensers
Tower
City Water
Sap Tank
Proposed Floc. System
Recycled Treated Wastewater
Primary Oil/Water Separator
Secondary Oil/Water Separator
Aeration Pond
Final Oxidative Pond
POTW

CORPORATION FOREST PRODUCTS DIVISION
OLUMBUS, MISSISSIPPI
ESS AND WASTEWATER FLOW DIAGRAM

SEPTEMBER, 1984

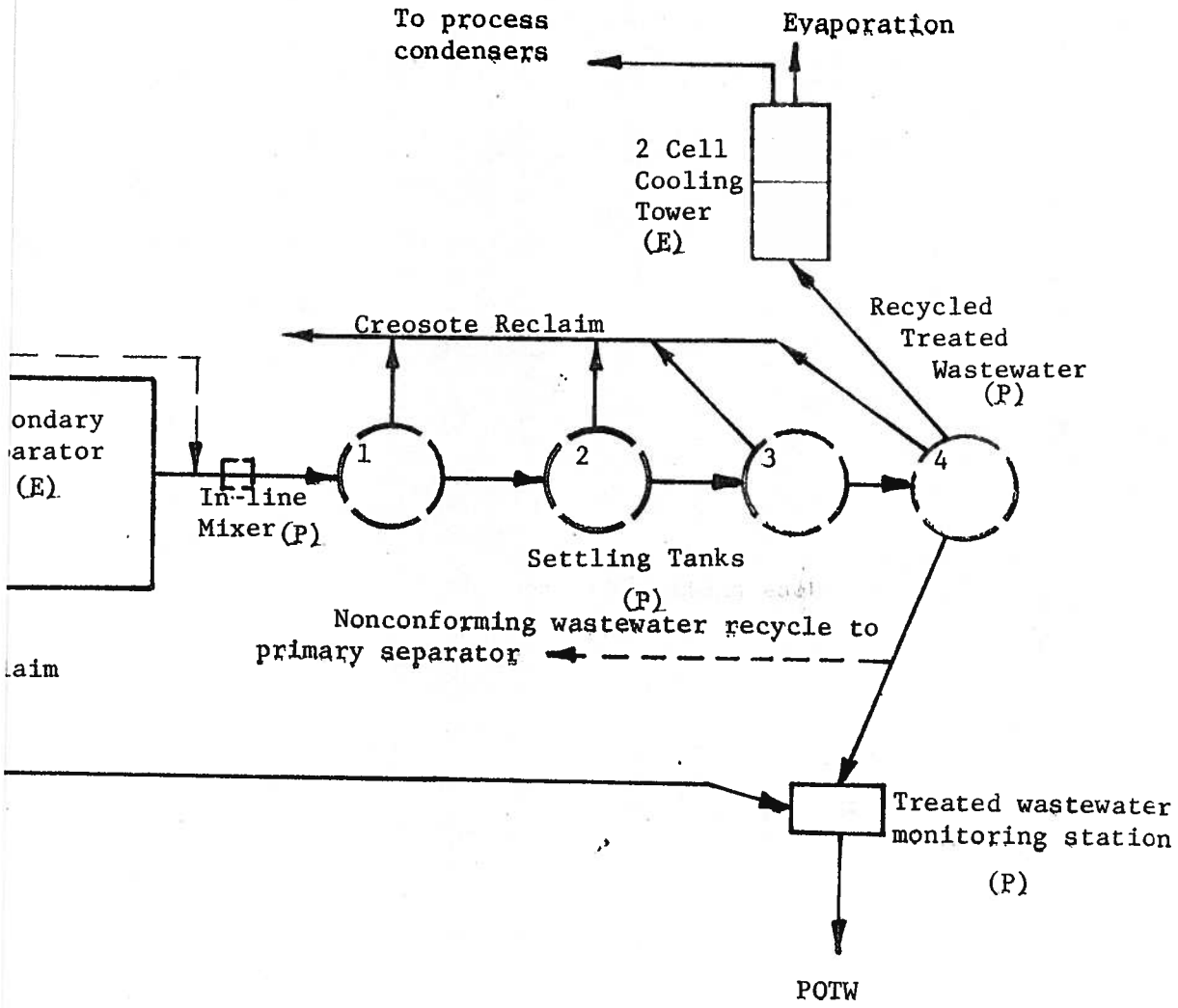

ATTACHMENT I

KERR McGEE CHEMICAL CORPORATION

FOREST PRODUCTS DIVISION

COLUMBUS, MISSISSIPPI FACILITY

EPA-ID NO. MSD 990866329

Proposed changes in the handling and treatment of
process wastewater
at the
Columbus, Mississippi Plant

Prepared by:
Continental Engineering Service
P. O. Box 752
Aberdeen, Mississippi

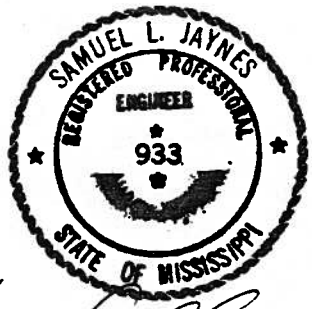

CONTENTS

EXISTING PLANT DESCRIPTION

PROPOSED TREATMENT SYSTEM

WASTEWATER CHARACTERISTICS

WASTEWATER TREATMENT TESTS

KERR-MCGEE CHEMICAL CORPORATION
FOREST PRODUCTS DIVISION
COLUMBUS, MISSISSIPPI FACILITY
EPA-ID NO. MSD 990866329

In April, 1984, Kerr-McGee Chemical Corporation, Forest Products Division, submitted to the Mississippi Bureau of Pollution Control a closure plan for the two surface impoundments at the Columbus, Mississippi Wood Preserving Facility. To facilitate closure, certain changes in the handling and treatment of the process wastewater will have to be completed. The purpose of this report is to present the process design for upgrading the existing system.

EXISTING PLANT DESCRIPTION

The Columbus wood preserving facility was built in 1928 and acquired by Kerr-McGee Corporation in 1964. The main plant consists of approximately 90 acres (figure 1). At the present time, creosote coal tar solution is the only wood preservative used in the plant, although pentachlorophenol was also used until 1976.

Wastewater generated by the wood preserving process is passed through a primary oil/water separator and then split into two streams for parallel passage through a secondary dual-compartment oil/water separator (figure 2). Creosote settles in these vessels where it is recovered and returned to the process for reuse.

From the second stage separator, the waste streams are recombined and discharged to an aeration pond, then to an oxidation pond prior to discharge to the Columbus Publicly Owned Treatment Works (POTW).

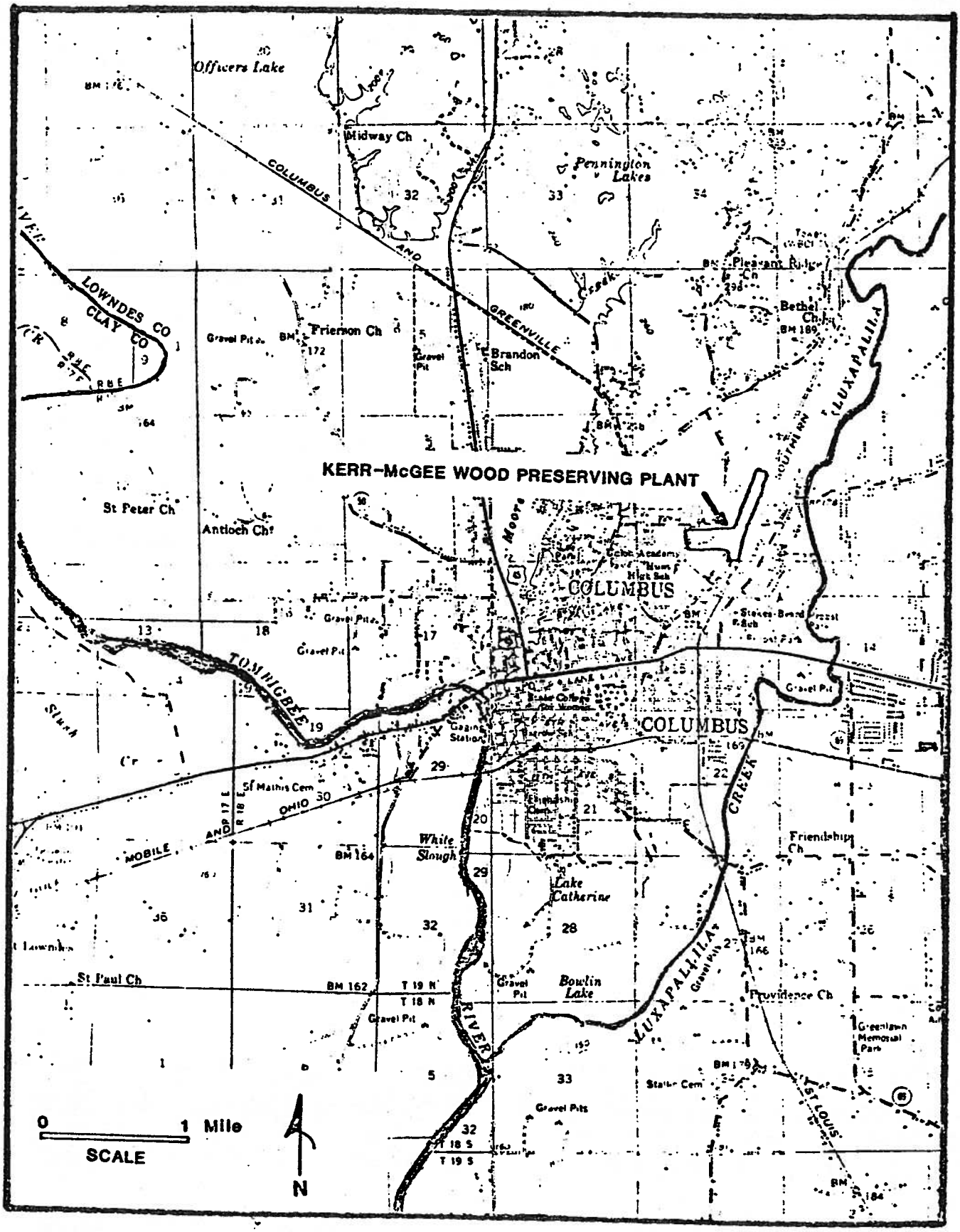

FIGURE 1: KERR-McGEE FACILITY LOCATION

FIG. 2 SCHEMATIC DIAGRAM
KM WOOD PRESERVING PLANT
COLUMBUS, MISSISSIPPI

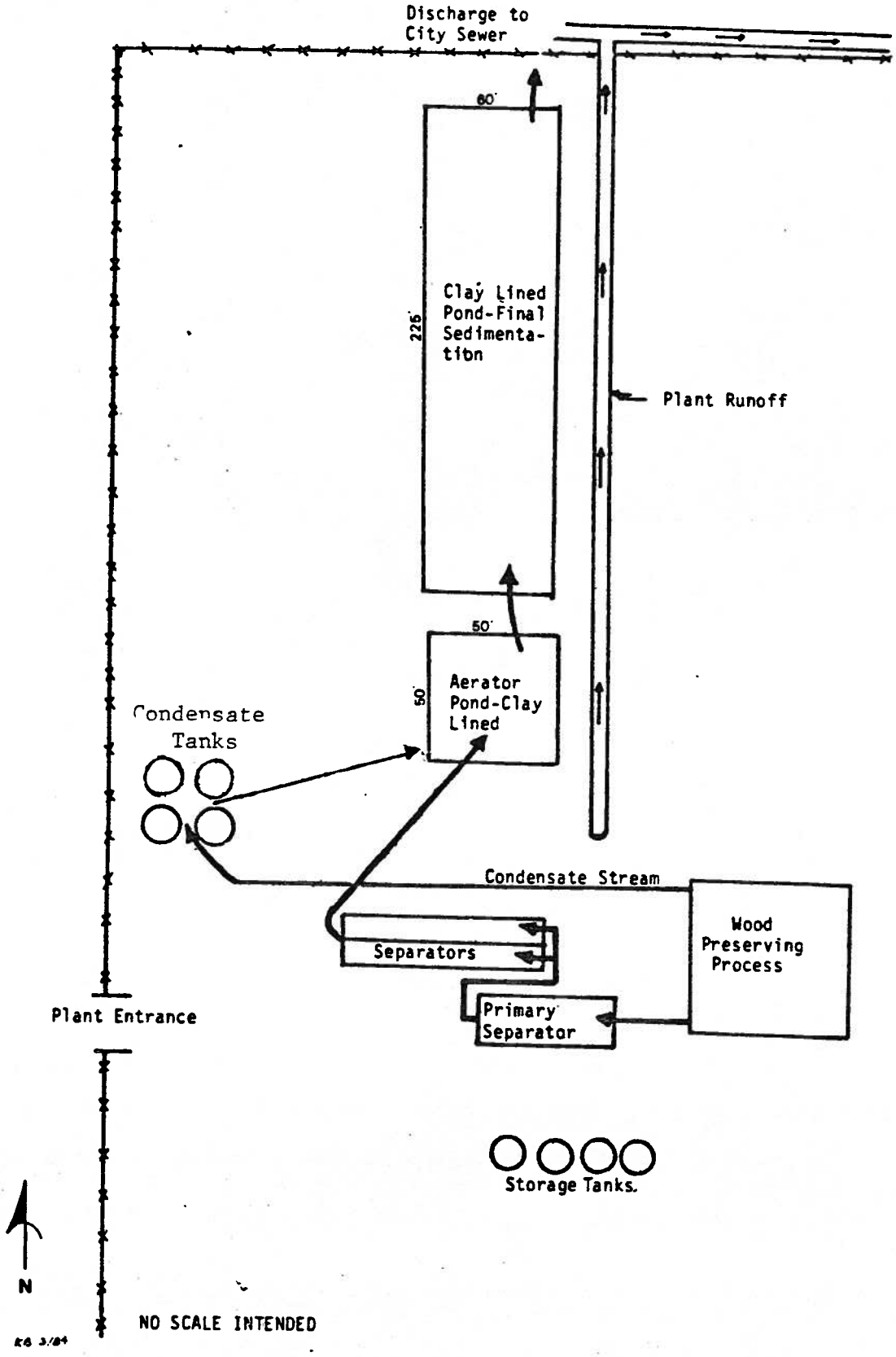

Steam condensate and water that is not contaminated with creosote are discharged into four condensate receiving tanks, then discharged to the aeration pond for commingling and discharge with process wastewater.

PROPOSED TREATMENT SYSTEM

Kerr-McGee is proposing to discontinue the use of the aeration pond and oxidation pond in accordance with State of Mississippi hazardous waste regulations. Before closure of the impoundments can begin, an improved wastewater treatment system will be installed, permitted and operated in accordance with Mississippi Water Pollution Control Law (Section 49-17-1, et seq., Mississippi Code of 1972). The system will pretreat the process wastewater prior to discharging it to the Columbus POTW. The new wastewater treatment system will replace the surface aeration pond and oxidation lagoon.

The proposed upgrading plan includes replacing the treatment effluent in the impoundments with chemical treatment. This will be accomplished by adjusting the pH of the effluent from the primary oil/water separator with caustic soda. A chemical feed pump and an in-line static mixer will feed and mix the caustic soda with the wastewater. Downstream of the caustic addition system and just prior to entering the secondary oil/water separators, a polymeric flocculant will be added to the waste stream with appropriate chemical feed pumps and in-line mixers. The effluent from the secondary separators will be pumped to a series of four holding tanks with a capacity of approximately 60,000 gallons. From the fourth tank the wastewater stream will be recycled to the cooling tower for reuse and the balance released to the city sewer through a new discharge line at a controlled rate. A pH monitor and sampler will be installed to monitor the treatment plant's effluent and to insure that the effluent will comply with any requirements the Columbus POTW authority may deem as necessary prerequisites to the use of its sewage system and treatment works. Refer to the Proposed Wastewater Flow Diagram, dated September, 1984.

WASTEWATER CHARACTERISTICS

The wastewater to be treated by the proposed treatment system includes boiler blowdown and all process wastewaters generated by the production process. Steam condensate will be recirculated to the boilers as boiler feed water.

Recent analyses of the wastewater show that the raw wastewater has the following characteristics:

Oil and Grease	- 162.8	mg/l
Phenol	- 208.7	mg/l
Pentachlorophenol	- <1.0	mg/l
BOD_5	- 322	mg/l
pH	5.18	

The volume of wastewater generated per day will vary from zero to a maximum of around 15,000 gpd. The plant is currently treating dry stock and the volume of wastewater is only 3,000 to 5,000 gpd. When the plant treats green wood, the flow of wastewater will increase to 10-15,000 gpd. This amount does not include potential benefits of recycling treated wastewater as makeup to the cooling tower and clean condensate reuse which together would reduce the volume of wastewater discharged by an estimated 5,000 gpd.

WASTEWATER TREATMENT TESTS

Kerr-McGee is presently studying proposals for the chemical treatment system. The suppliers under consideration are Drew Chemical and Mogul. Both suppliers have the ability to furnish the polymeric flocculants and the chemical injection and mixing equipment.

Tests recently conducted by the vendors indicate that the treated effluent quality will be as follows:

Oil and Grease	- 40	mg/l
Phenols	- 100-300	mg/l
Pentachlorophenol	- <1.0	mg/l
BOD_5	- 250-450	mg/l
pH	- 6.0-9.0	

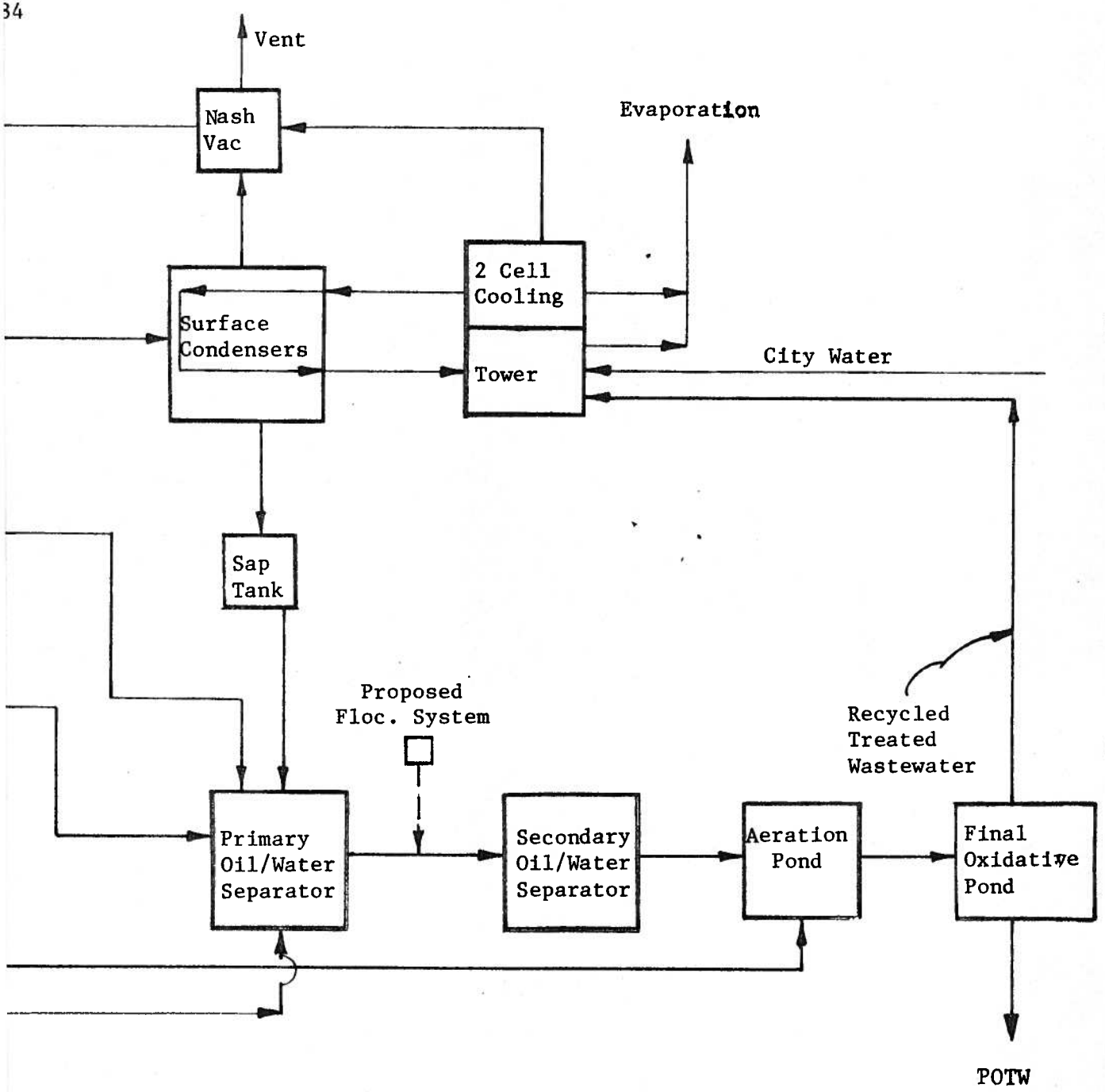
Vent
Nash Vac
Evaporation
2 Cell Cooling
Surface Condensers
Tower
City Water
Sap Tank
Proposed Floc. System
Recycled Treated Wastewater
Primary Oil/Water Separator
Secondary Oil/Water Separator
Aeration Pond
Final Oxidative Pond
POTW

For Agency Use
Application Number

Date Received

RECEIVED
FEB 6 REC'D
DEPT OF NAT. RESOURCE
BUREAU OF POLLUTION CONTROL

STATE OF MISSISSIPPI
BUREAU OF POLLUTION CONTROL
P. O. BOX 10385
JACKSON, MISSISSIPPI 39209

APPLICATION FOR A STATE OPERATING PERMIT

(Please print or type)

1. Name of Applicant: KERR-McGEE CHEMICAL CORPORATION
FOREST PRODUCTS DIVISION, COLUMBUS FACILITY

2. Mailing Address of Applicant:

Number & Street (P.O. Box): P. O. BOX 906

City: COLUMBUS State: MS Zip: 39701

3. Applicant's Authorized Agent:

Name & Title: P. C. GASKIN, ENVIRONMENTAL CONTROL

Number & Street (P.O. Box): P. O. BOX 25861

City: OKLAHOMA CITY State: OK Zip: 73125

Telephone Number: 405/270-2395

4. Facilities Location:

Number & Street: 14th AVENUE & 20TH STREET NORTH

City: COLUMBUS County: LOWNDES

5. Nature of Business: WOOD PRESERVING

6. Do you Discharge Wastewater to a POTW? X Yes ____ No
If "Yes" Continue, if "No" go to Item 10.

Name of POTW Receiving Wastewater: CITY OF COLUMBUS, MS
WASTEWATER WORKS

Number & Street (P.O. Box): YORKVILLE ROAD

City: COLUMBUS County: LOWNDES

TABLE 1

65 Toxic Pollutants Listed in Consent Decree and Referenced in 307(a) of the CWA of 1977

Believe Present		Concen.	Believe Present		Concen.
	Acenaphthene			Endrin and Metabolities	
	Acrolein			Ethylbenzene	
	Acrylonitrile			Flouranthene	
	Aldrin/Dieldrin			Haloethers	
	Antimony & compounds			Halomethanes	
	Arsenic & compounds			Heptachlor & metabolities	
	Asbestos			Hexachlorobutadiene	
	Benzene			Hexachlorocyclopentadiene	
	Benzidine			Hexachlorocylohexane	
	Beryllium & compounds			Isophorone	
	Cadmium & compounds			Lead & compounds	
	Carbon tetrachloride			Mercury & compounds	
	Chlordane			Naphthalene	
	Chlorinated benzenes			Nickel & compounds	
	Chlorinated ethanes			Nitrobenzene	
	Chlorinalkyl ethers			Nitrophenols	
	Chlorinated naphthalene			Nitrosamines	
	Chlorinated phenols		x	Pentachlorophenol	
	Chloroform		x	Phenol	
	2-Chlorophenol			Phthalate esters	
	Chromium & compounds			Polychlorinated byphenyls(PCB)	
	Copper & compounds			Polynuclear aromatic	
	Cyanides			Hydrocarbons	
	DDT & metabolities			Selenium & compounds	
	Dichlorobenzenes			Silver & compounds	
	Dichlorobenzidine			2,3,7,8-Tetrachlorodibenzo-p-dioxine (TCDD)	
	Dichloroethylenes			Tetrachloroethylene	
	2,4-Dichlorophenol			Thallium & compounds	
	Dichloropropane & Dichloropropene			Toluene	
	2,4-Dimethylphenol			Toxaphene	
	Dinitrotoluene			Trichloroethylene	
	Diphenylhydrazine			Vinyl chloride	
	Endosulfan & metabolities			Zinc & compounds	

List any other toxicants known or anticipated to be present in the discharge:

Creosote is the treatment chemical used in this plant. We believe this substance can be represented by COD in the wastewater.

For your information we attach the GC-MS scan of typical creosote.

15. Treatment Units:

A. Do you provide treatment for your wastewater? x **Yes** ____ **No**

B. If yes, list and describe each treatment unit and attach a line schematic of the treatment system indicating each treatment unit and a water balance.

Primary oil/water separator; secondary oil/water separation; aeration basin, oxidative lagoon; recycle treated wastewater; monitored discharge to POTW (routine inspection and flow measurement).

I certify that I am familiar with the information contained in this application and that to the best of my knowledge and belief such information is true and correct.

P. C. GASKIN
Printed Name of Applicant's Authorized Agent

ENVIRONMENTAL CONTROL
Title

February 2, 1984
Date Application Signed

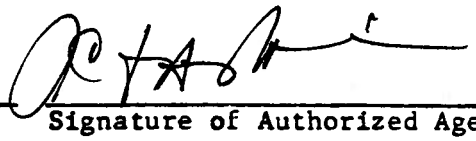

Signature of Authorized Agent

Date Received

STATE OF MISSISSIPPI
BUREAU OF POLLUTION CONTROL
P. O. BOX 10385
JACKSON, MISSISSIPPI 39209

APPLICATION FOR A STATE OPERATING PERMIT

(Please print or type)

1. **Name of Applicant:** Kerr McGee Chemical Corporation
   Forest Products Division

2. **Mailing Address of Applicant:**

   Number & Street (P.O. Box): 607 14th Street North, P. O. Box 906

   City: Columbus **State:** Mississippi **Zip:** 39701

3. **Applicant's Authorized Agent:**

   Name & Title: P. C. Gaskin, Environmental and Quality Control

   Number & Street (P.O. Box): P. O. Box 25861, Kerr McGee Center

   City: Oklahoma City **State:** Oklahoma **Zip:** 73125

   Telephone Number: 405/270-2395

4. **Facilities Location:**

   Number & Street: 607 14th Street North

   City: Columbus **County:** Lowndes

5. **Nature of Business:** Wood Preserving Facility

6. **Do you Discharge Wastewater to a POTW?** __X__ **Yes** _____ **No**
   If "Yes" Continue, if "No" go to Item 10.

   Name of POTW Receiving Wastewater: Columbus, Mississippi
   Wastewater Treatment Plant

   Number & Street (P.O. Box): Pickensville Road

   City: Columbus **County:** Lowndes

7. Discharge Type and Occurrence:

A. Type of Discharge: X Continuous; If Continuous, 15,000 Gallons per Day (Max.)

____ Batch

B. Discharge Occurrence: 7 Days per Week

C. Discharge Occurrence: (Months per Year)

X	Jan.	X	Feb.	X	Mar.	X	Apr.
X	May	X	Jun.	X	Jul.	X	Aug.
X	Sept.	X	Oct.	X	Nov.	X	Dec.

8. If Batch: N/A

A. ____ Thousand Gallons per Discharge

B. ____ Hours per Day

C. ____ Discharge Occurrences per Day

9. Maximum Period of Flow: From October (Month) to April (Month)

10. Facility Water Use:

Estimate average volume in thousand gallons per day for the following types of water usage at this facility.

Noncontact Cooling:	2,000
Boiler Feed:	10,000
Process (Including Contact Cooling):	2,000
Sanitary:	500
Other:	N/A
Total:	14,500

11. List All Facility Discharges:

Other water losses (surface water, product consumption, evaporation). Indicate volume in thousand gallons.

Steam evaporation	3,500
Steam Condensate (recycled)	5,500
Boiler blowdown (discharge)	1,000
Treated wastewater (discharge)	3,000
Sanitary (discharge)	500
Cooling tower evaporation	2,000
Treated surface runoff (discharge)	500

12. The Columbus plant is a wood preserving plant that pressure treats wood products (mainly crossties) with creosote. The dry wood is placed in a pressure cylinder, immersed in the treating oil(creosote) and pressure is applied to the cylinder for a period of time to impregnate the wood with the preservative. After treating is complete, a vacuum is placed on the pressure cylinder to remove excess preservative. The volume of contaminated wastewater from the treating cylinder is small, approximately 300 gallons per charge, and consists mostly of vacuum seal water and condensate.

Most of the wood treated by this plant is air dried. However, at times it is necessary to dry the wood before treatment. This is done by placing the wood in the cylinder, applying heat, and pulling a vacuum on the cylinder. These drying cycles generate some 6,000 gallons of wastewater per charge. This water consists of wood sap (approximately 1,800 gallons), vacuum seal water (approximately 3,900 gallons) and contact condensate.

There is a considerable amount of steam condensate produced in a day. This water is basically clean process water and averages some 6,500 gallons per day.

There is also a small amount of rainwater runoff that is collected and treated. This is the rainwater that collects in front of the treating cylinders and in the diked areas around the storage tanks. This water averages less than 1,000 gallons per one inch of rain.

12. Give narrative description of process(es) producing discharge, or in the case of no discharge, that generates wastewater.

See attached

13. List raw materials used: Wood and creosote

14. Effluent Characteristics:

A. You must provide the results of at least one analysis for every pollutant in this table. Complete one table for each outfall to the city sewer. If your facility does not have a discharge indicate so and disregard.

Parameter	Maximum Daily Value	Maximum 30 Day Value	Long Term Average Value
BOD_5			432 mg/l
COD			± 1700 mg/l
TSS			< 100 mg/l
Ammonia			< 0.5 mg/l
Oil & Grease			40 mg/l
pH			6.0 - 9.0

B. Review the substances listed in Table One and indicate which of these substances you have reason to believe may be in your discharge. For instance you may use solvents or Biocides that contain one or more of the indicated solvents. For each substance indicated you must perform at least one analysis and report results.

A toxic pollutant scan for the 67 substances has not been performed on the treated wastewater. Since creosote is the only preservative used at the Columbus Facility, trace quantities of constituents found in creosote might be present in the treated wastewater discharge.

TABLE 1

65 Toxic Pollutants Listed in Consent Decree and Referenced in 307(a) of the CWA of 1977

Believe Present		Concen.	Believe Present		Concen.
	Acenaphthene			Endrin and Metabolities	
	Acrolein			Ethylbenzene	
	Acrylonitrile			Flouranthene	
	Aldrin/Dieldrin			Haloethers	
	Antimony & compounds			Halomethanes	
	Arsenic & compounds			Heptachlor & metabolities	
	Asbestos			Hexachlorobutadiene	
	Benzene			Hexachlorocyclopentadiene	
	Benzidine			Hexachlorocylohexane	
	Beryllium & compounds			Isophorone	
	Cadmium & compounds			Lead & compounds	
	Carbon tetrachloride			Mercury & compounds	
	Chlordane			Naphthalene	
	Chlorinated benzenes			Nickel & compounds	
	Chlorinated ethanes			Nitrobenzene	
	Chlorinalkyl ethers			Nitrophenols	
	Chlorinated naphthalene			Nitrosamines	
	Chlorinated phenols		X	Pentachlorophenol	<1.0 ppm
	Chloroform		X	Phenol	<300 ppm
	2-Chlorophenol			Phthalate esters	
	Chromium & compounds			Polychlorinated byphenyls(PCB)	
	Copper & compounds			Polynuclear aromatic	
	Cyanides			Hydrocarbons	
	DDT & metabolities			Selenium & compounds	
	Dichlorobenzenes			Silver & compounds	
	Dichlorobenzidine			2,3,7,8-Tetrachlorodibenzo-p-dioxine (TCDD)	
	Dichloroethylenes			Tetrachloroethylene	
	2,4-Dichlorophenol			Thallium & compounds	
	Dichloropropane & Dichloropropene			Toluene	
	2,4-Dimethylphenol			Toxaphene	
	Dinitrotoluene			Trichloroethylene	
	Diphenylhydrazine			Vinyl chloride	
	Endosulfan & metabolities			Zinc & compounds	

List any other toxicants known or anticipated to be present in the discharge:

Creosote is the only preservative used at this facility. We believe this substance can be represented by COD in the treated wastewater discharge.

15. Treatment Units:

A. Do you provide treatment for your wastewater? X **Yes** ____ **No**

B. If yes, list and describe each treatment unit and attach a line schematic of the treatment system indicating each treatment unit and a water balance.

See Attachment I

I certify that I am familiar with the information contained in this application and that to the best of my knowledge and belief such information is true and correct.

P. C. Gaskin	Environmental and Quality Control
Printed Name of Applicant's Authorized Agent	**Title**
October 29, 1984	P. C. Gaskin
Date Application Signed	**Signature of Authorized Agent**